Los Angeles County
Metropolitan Transportation Authority

Link Union Station

Final NEPA Alternatives Evaluation Memorandum and Engineering Plans

January 2026

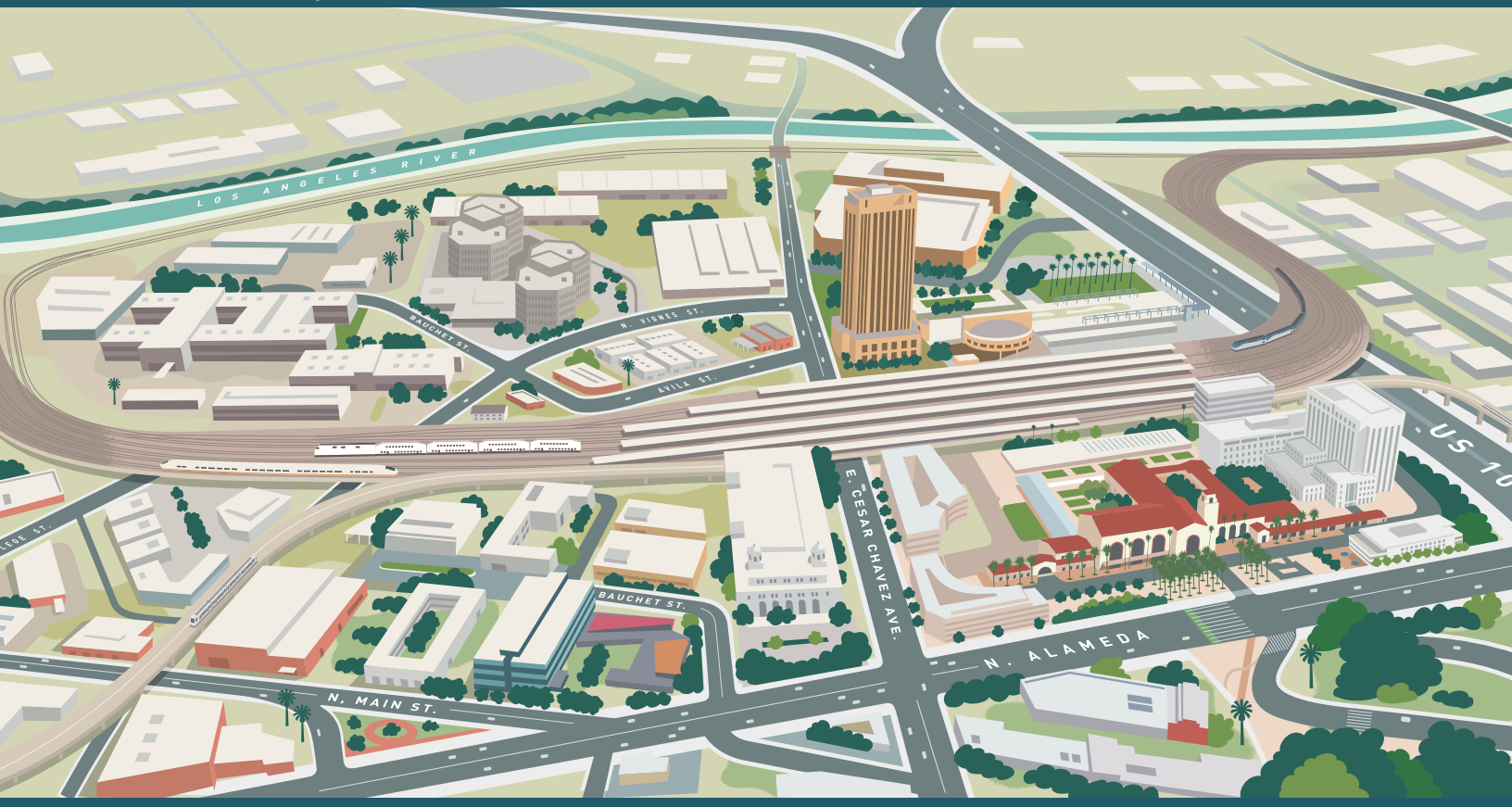

The environmental review, consultation, and other actions required by applicable Federal environmental laws for this project are being, or have been, carried out by the State of California pursuant to 23 U.S.C. 327 and a Memorandum of Understanding dated July 23, 2019, renewed July 22, 2024, and executed by the Federal Railroad Administration and the State of California.

Metro

CALIFORNIA High-Speed Rail Authority

(THIS PAGE INTENTIONALLY BLANK)

Los Angeles County
Metropolitan Transportation Authority

Link Union Station

Final NEPA Alternatives Evaluation Memorandum

January 2026

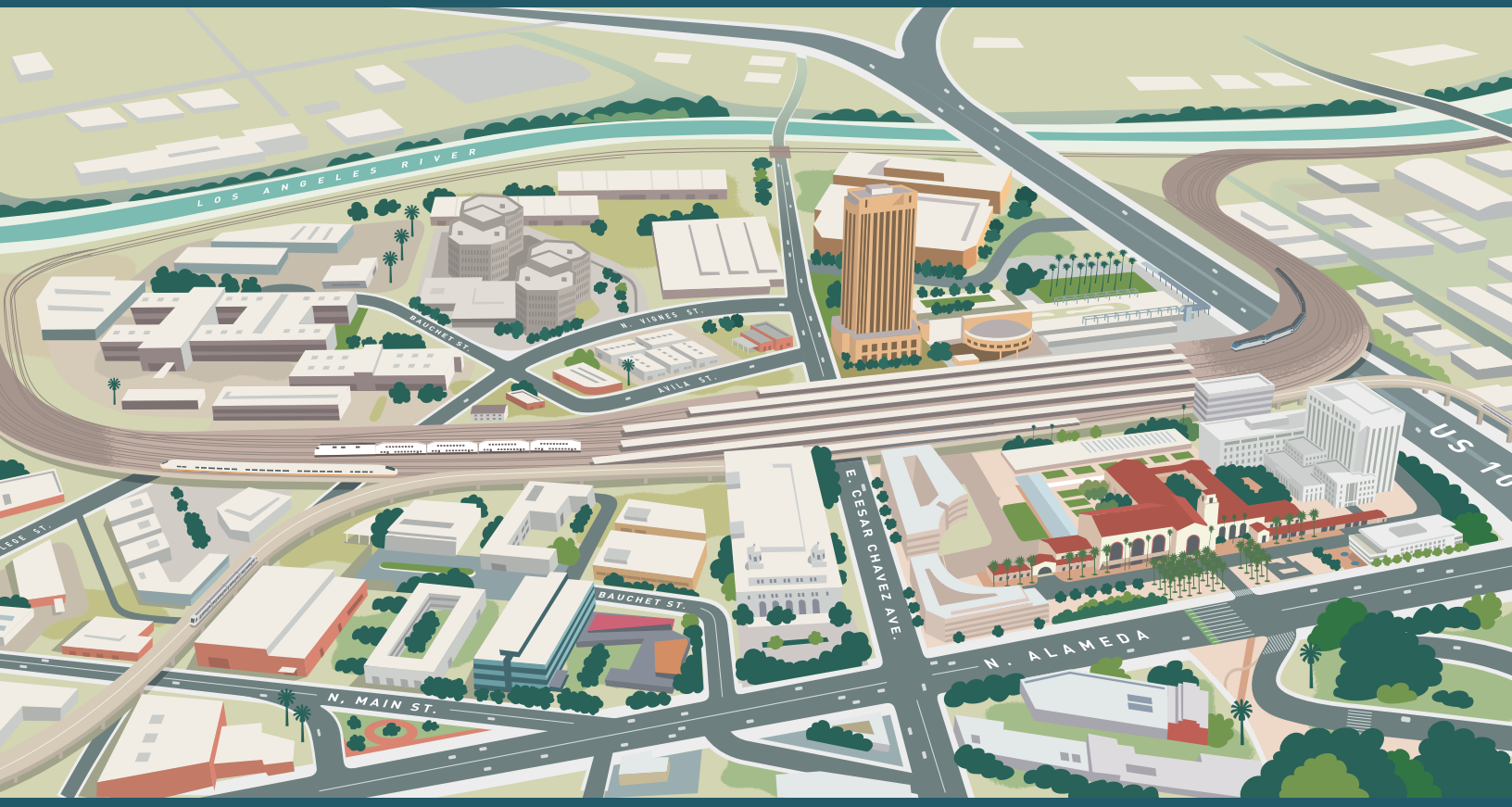

The environmental review, consultation, and other actions required by applicable Federal environmental laws for this project are being, or have been, carried out by the State of California pursuant to 23 U.S.C. 327 and a Memorandum of Understanding dated July 23, 2019, renewed July 22, 2024, and executed by the Federal Railroad Administration and the State of California.

Metro

CALIFORNIA High-Speed Rail Authority

(THIS PAGE INTENTIONALLY BLANK)

CONTENTS

ES.0 Executive Summary v
ES.1 Purpose of Memorandum v
ES.2 Planning Context and Background v
ES.3 Public and Agency Outreach and Feedback viii
ES.4 Alternatives Analysis Process ix

1.0 Introduction 1
1.1 Lead Agency Roles 1
1.2 Purpose and Need 2
1.2.1 Purpose 2
1.2.2 Need 2

2.0 Planning Context and Background 3
2.1 Run-Through Tracks Project 3
2.2 Southern California Regional Interconnector Project 5
2.3 Link Union Station Project 5

3.0 Public and Agency Outreach and Feedback 9

4.0 Range of Track Alignments and Concourse Concepts Considered 11
4.1 Track Alignment Alternatives 11
4.2 Passenger Concourse Concepts 19

5.0 Track Alignment Alternatives 21
5.1 Screening Criteria 21
5.1.1 Criterion 1 – Accommodate 10 Run-Through Tracks over US-101 21
5.1.2 Criterion 2 – Avoid Shared Lead Tracks for Freight Trains and Intercity Trains at BNSF West Bank Yard 21
5.1.3 Criterion 3 – Avoid Lowering the Existing Red and Purple Line Subway 22
5.1.4 Criterion 4 – Avoid Lowering the United States Highway 101 and the El Monte Busway 22
5.1.5 Criterion 5 – Avoid Stacking Platforms for Regional/Intercity Rail Trains and High-Speed Rail Trains 22
5.1.6 Criterion 6 – Avoid Adding an Eighth Platform for Regional/Intercity Rail Trains or High-Speed Rail Trains 22
5.2 Track Alignment Alternatives Screening Results 23
5.2.1 Track Alignment Alternatives 1 through 6 23
5.2.2 Track Alignment Alternative 7 through 9, 12, and 13 24
5.2.3 Track Alignment Alternative 10 25
5.2.4 Track Alignment Alternative 11 26
5.2.5 Track Alignment Alternative 14 27
5.3 Recommendation Process 28

6.0 Concourse Concepts 31
6.1 Screening Criteria 31
6.1.1 Criterion 1 – Add Passenger Capacity 31
6.1.2 Criterion 2 – Provide Egress Routes and Safe Evacuation 31
6.1.3 Criterion 3 – Enhance Passenger Safety and Accessibility 32
6.1.4 Criterion 4 – Optimize Concourse Space and Back-of-House Operations 32
6.1.5 Criterion 5 – Maintain or Improve Passenger Transfer Times 32

6.1.6 Criterion 6 – Align with Community Preference....33
6.2 Passenger Concourse Concepts Screening Results....33
6.2.1 Concourse Concept 1....33
6.2.2 Concourse Concept 2....34
6.2.3 Concourse Concept 3....35
6.2.4 Concourse Concept 4....37
6.2.5 Concourse Concept 5....38
6.2.6 Concourse Concept 6....39
6.3 Recommendation Process....40
7.0 Summary and Findings....43
7.1 No Action Alternative....43
7.2 Build Alternative....44
8.0 References....45

TABLES

Table ES-1. Summary of Environmental Planning Timeline....v
Table ES-2. Track Alignment Alternatives Screening Summary....xiii
Table ES-3. Passenger Concourse Concepts Screening Summary....xxiii
Table ES-4. Track Alignment Alternative and Concourse Concept Recommended for Detailed Evaluation in Draft EIS....xxvii
Table 4-1. Track Alignment Alternatives Considered....13
Table 4-2. Passenger Concourse Concepts Considered....19
Table 5-1. Track Alignment Alternatives 1 - 5 Screening Criteria Analysis....23
Table 5-2. Track Alignment Alternatives 7 through 9, 12, and 13 Screening Criteria Analysis....24
Table 5-3. Track Alignment Alternative 10 Screening Criteria Analysis....25
Table 5-4. Track Alignment Alternative 11 Screening Criteria Analysis....26
Table 5-5. Track Alignment Alternative 14 Screening Criteria Analysis....27
Table 6-1. Concourse Concept 1 Screening Criteria Analysis....34
Table 6-2. Concourse Concept 2 Screening Criteria Analysis....35
Table 6-3. Concourse Concept 3 Screening Criteria Analysis....36
Table 6-4. Concourse Concept 4 Screening Criteria Analysis....37
Table 6-5. Concourse Concept 5 Screening Criteria Analysis....38
Table 6-6. Concourse Concept 6 Screening Criteria Analysis....39

FIGURES

Figure 2-1. S-Shaped Band Configuration of Run-Through Tracks Project 4
Figure 5-1. Track Alignment Alternative 14 29
Figure 6-1. Concourse Concept 6 (Expanded Passageway) 41

ATTACHMENTS

Attachment A: Track Alignment Alternatives Considered
Attachment B: Passenger Concourse Concepts Considered

ACRONYMS

ADA	Americans with Disabilities Act
CHSRA	California High-Speed Rail Authority
Caltrans	California Department of Transportation
CEQ	Council on Environmental Quality
CEQA	California Environmental Quality Act
EIR	environmental impact report
EIS	environmental impact statement
FRA	Federal Railroad Administration
HSR	high-speed rail
LAUS	Los Angeles Union Station
Link US	Link Union Station
LOSSAN	Los Angeles-San Diego-San Luis Obispo
Metro	Los Angeles County Metropolitan Transportation Authority
NEPA	National Environmental Policy Act
NFPA	National Fire Protection Association
Project	Link Union Station Project
ROW	right-of-way
SCRIP	Southern California Regional Interconnector Project
US-101	United States Highway 101
VCE	vertical circulation element

ES.0 Executive Summary

ES.1 Purpose of Memorandum

The National Environmental Policy Act (NEPA) requires that an environmental impact statement (EIS) "rigorously explore and objectively evaluate all reasonable alternatives" and "devote substantial treatment to each alternative considered in detail so that reviewers may evaluate their comparative merits" (40 Code of Federal Regulations Section 1502.14).[1]

This memorandum summarizes the Link US alternatives development and analysis process and results. This memorandum also provides the planning context and background information for development of the track alignments and concourse-related improvements, describes the range of track alignment alternatives and concourse concepts considered, and provides a full evaluation of the screening process to determine how the track alignment alternatives and concourse concepts perform against the applicable criteria. Based on the results of the screening process, this memorandum also identifies the track alignment alternative and concourse concept recommended for full evaluation as the Build Alternative in the Link Union Station (Link US) Project (Project) EIS.

ES.2 Planning Context and Background

Since 2002, various iterations of the major Project components have been developed, evaluated, and refined. Table ES-1 provides a summary of the environmental planning timeline for development of track alignment alternatives and concourse concepts considered as part of the alternatives analysis process.

Table ES-1. Summary of Environmental Planning Timeline

Month/Year	Environmental Planning Summary
March 2002	Caltrans and FRA (in cooperation with Amtrak) initiate the Run-Through Tracks Project[a] (Caltrans and FRA 2002) to define and screen a range of potential run-through track alignments south of LAUS. The results of the environmental process for the Run-Through Tracks Project revealed the optimal configuration for run-through tracks south of LAUS is an "s-shaped band" configuration from LAUS to the main line tracks along the Los Angeles River.

[1] The Council on Environmental Quality (CEQ) issued new regulations, effective April 20, 2022, updating the NEPA implementing procedures at 40 CFR Parts 1500–1508. However, because this environmental document was initiated prior to the effective date, it is not subject to the new regulations and CHSRA is relying on the regulations as they existed on the date of the initial Notice of Intent, May 31, 2016. Therefore, all citations to CEQ regulations in this environmental document refer to the 1978 regulations and the 1986 amendment, 51 *Federal Register* 15618 (Apr. 25, 1986).

Table ES-1. Summary of Environmental Planning Timeline

Month/Year	Environmental Planning Summary
December 2005/ January 2006	FRA issued a Final EIS and Caltrans certified the Final EIR for the Run-Through Tracks Project. Alternative A-1 was identified as the preferred alternative in the Run-Through Tracks Project Final EIS/EIR. FRA did not issue a Record of Decision after the Final EIS was completed. The planned HSR system was not part of the Run-Through Tracks Project.
April 2014	Metro initiated the planning and design of the Southern California Regional Interconnector Project (SCRIP) to include new lead tracks and a reconstructed throat, a new passenger concourse below an elevated rail yard, and up to 10 new run-through tracks south of LAUS. The SCRIP did not accommodate the planned HSR system.
October 2015	Metro released *Transforming Los Angeles Union Station, A Summary Report* (Metro 2015a), which included a development strategy for LAUS and surrounding areas. The LAUS Master Plan identified a need to meet forecasted passenger demand and accommodate over 200,000 passenger trips through LAUS each weekday by 2040 by increasing rail yard capacity, enhancing operational flexibility south of LAUS, and providing new passenger accommodations. The LAUS Master Plan also acknowledged the introduction of the planned HSR system at LAUS (Metro 2015b).
January 2016	Metro rebranded the SCRIP as the Link US Project and initiated the process to define the purpose and need, and consider a reasonable range of track alignment alternatives and concourse concepts to evaluate in the CEQA and NEPA process. Upon rebranding the SCRIP to Link US, an alternatives analysis process was initiated that led to some of the current track alignment alternatives and concourse concepts considered in this memorandum.
May/June 2016	Metro and CHSRA entered into an agreement to complete the necessary Project-level environmental analysis and preliminary engineering to accommodate the planned HSR system as part of the Link US Project. FRA and Metro issued a Notice of Intent/Notice of Preparation to prepare a joint EIS/EIR for the Link US Project. The 2016 Notice of Intent identified the main Project components as the elevated throat and rail yard, a new passenger concourse, and up to 10 run-through tracks south of LAUS, all of which would accommodate the planned HSR system.
March 2017	Metro Board of Directors directed staff to develop an above-grade passenger concourse concept.
September/ October 2017	Metro, CHSRA, Metrolink, and other Link US stakeholders agreed to the following: • Regional/intercity rail trains and HSR trains could operate on common rail infrastructure (shared lead tracks) north of LAUS. • HSR platforms at LAUS could be shortened from 1,420 feet to 870 feet.
April 2018	Funding in the amount of $950 million was made available from state and local sources to construct run-through track infrastructure south of LAUS that would facilitate connections for regional/intercity trains and HSR trains from LAUS to the main line tracks along the west bank of the Los Angeles River.

Table ES-1. Summary of Environmental Planning Timeline

Month/Year	Environmental Planning Summary
October 2018	Metro elected to prepare a standalone EIR for the Link US Project pursuant to CEQA.
January 2019	Metro released the Link US Project Draft EIR for public comment. The Draft EIR included a full and equal level of evaluation of two track alignment alternatives and two passenger concourse concepts: • Both track alignment alternatives included up to 10 run-through tracks, with a loop track south of LAUS, the major difference being the shared[2] or dedicated[3] lead track alignment for HSR trains north of LAUS. • Both concourse concepts included concourse-related improvements below the rail yard. An above-grade component to the passenger concourse was also considered in conjunction with one of the alternatives considered in the Draft EIR.
June 2019	Metro certified the Link US Project Final EIR with refinements to one of the two track alignments, removing the loop track, and one of the two passenger concourse concepts, modifying the width of the passageway below the rail yard and removing the above-grade component. These refinements are summarized below. ***Removal of Loop Track*** – Based on input from funding partners, rail operators, and community stakeholders, and after receiving a substantial number of comments in opposition to effects resulting from the track alignment south of LAUS with a loop track, Metro refined the run-through track alignment south of LAUS to remove the loop track. With removal of the loop track, the run-through track alignment south of LAUS shifted approximately 125 to 150 feet north, thereby resulting in refinements to the infrastructure and civil improvements south of US-101. Removal of the loop track resulted in the following modifications: • Run-through track structures would be located north of Commercial Street, resulting in fewer property acquisitions south of Commercial Street and east of Center Street. • Commercial Street would not be realigned, and Vignes Street would remain open to vehicular traffic. • The Center Street and Commercial Street intersection would not be lowered and would remain in its current configuration. • Structures over Commercial Street would be avoided. • Run-through track structures east of Center Street would avoid conflicts with the Division 20 Portal Widening and Turnback Tracks Project. ***Removal of Above-Grade Concourse Component*** – Metro received a total of 634 public comments during the Link US Project Draft EIR 45-day public comment period, of which over 75 percent of the public comments opposed the above-grade concourse and indicated the preference for the new modified expanded passageway or at-grade passenger concourse below the rail yard. In response, refinements to the concourse were made to increase the width of the expanded passageway while

[2] An alignment north of Los Angeles Union Station (LAUS) with six total lead tracks; two of which could be shared with high-speed rail (HSR) trains

[3] An alignment north of LAUS with seven total lead tracks; five lead tracks for regional/ intercity rail trains, and two lead tracks that would encroach outside of the existing right-of-way (ROW) for HSR trains

Table ES-1. Summary of Environmental Planning Timeline

Month/Year	Environmental Planning Summary
	removing the above-grade portion. Specifically, the expanded passageway was refined from a width of approximately 120 feet to 140 feet to include additional space for waiting areas, restrooms, retail areas, and other passenger amenities so that the above-grade component could be removed.
July 2019	FRA and the State of California entered into a NEPA Assignment Memorandum of Understanding. The NEPA Assignment Memorandum of Understanding outlines the roles and responsibilities of CHSRA to serve as the federal lead agency with NEPA review and approval responsibilities for the HSR program and other projects, including the Link US Project.
October 2019	CHSRA and Metro began preparation of a standalone Link US Project EIS. Based on the purpose and need and the evolution of refinements to major Project components associated with track alignment alternatives and concourse concepts considered, CHSRA and Metro began preparation of a NEPA Alternatives Evaluation Memorandum to outline the process used to screen a reasonable range of track alignment alternatives and concourse concepts for detailed evaluation in the Link US Project EIS.
September 2020	CHSRA issued a Revised NOI to initiate additional scoping and solicit additional public and agency input for the Malabar Yard railroad improvements in the City of Vernon. The Malabar Yard railroad improvements were identified to offset the permanent loss of freight storage tracks at the BNSF West Bank Yard and avoid or reduce the potential for adverse effects on freight rail operations.
March 2022	CHSRA issued a Final Record of Decision for the Burbank to Los Angeles Project Section of the planned HSR system. CHSRA's Selected Alternative for the Burbank to Los Angeles Project Section was the HSR Build Alternative, which included shared lead tracks north of LAUS.
December 2022	Metro elected to consider a track configuration at the BNSF West Bank Yard that would allow for Amtrak trains and BNSF trains to enter/exit the west bank area on separate and dedicated tracks. Dedicated BNSF and Amtrak lead tracks at the BNSF West Bank Yard was not a configuration studied by Metro until December 2022.

Notes:
[a] The Run-Through Tracks Project and SCRIP are predecessors to the Link US Project.
CHSRA=California High-Speed Rail Authority; Caltrans=California Department of Transportation; CEQA=California Environmental Quality Act; EIR=environmental impact report; EIS=environmental impact statement; FRA=Federal Railroad Administration; HSR=high-speed rail; LAUS=Los Angeles Union Station; Link US=Link Union Station; Metro=Los Angeles County Metropolitan Transportation Authority; NEPA=National Environmental Policy Act; SCRIP=Southern California Regional Interconnector Project; US-101=United States Highway 101

ES.3 Public and Agency Outreach and Feedback

Public and agency outreach began in 2015 prior to the Federal Railroad Administration's (FRA) issuance of the 2016 Notice of Intent and will continue throughout preparation of the Link US Project EIS, as well as during the subsequent design and construction phases.

During the California Environmental Quality Act (CEQA) process, public and agency feedback was provided to the Los Angeles County Metropolitan Transportation Authority (Metro), specifically on the track alignments and concourse concepts considered in this memorandum. Feedback received during this process included numerous reoccurring comments on the same or similar general topics. These key issue areas included comments related to:

- Passenger Transfer Times
- Passenger Circulation and Accessibility Enhancements
- Above-Grade Passenger Concourse Design
- Soil Contamination and Hazardous Waste/Materials
- Preservation of Historic Resources at LAUS
- Track Elevation Slope Safety and Runaway Trains
- Little Tokyo Community Concerns
- Public Art and Cultural Enhancement Programs
- Adjacent Parallel Tunnels

As discussed in Table ES-1, public and agency feedback received during the environmental impact report (EIR) process resulted in refinements to one track alignment and one passenger concourse concept. Public and agency feedback continued after Metro's certification of the Final EIR, as CHSRA and Metro prepared the standalone NEPA EIS and during the second scoping process for the Revised NOI. Public and agency outreach will continue throughout the environmental process, as well as during the subsequent design and construction phases.

ES.4 Alternatives Analysis Process

To facilitate the alternatives analysis process, the Purpose and Need was used to guide and develop criteria to screen track alignment alternatives and concourse concepts. This section summarizes the criteria and the results of screening 14 track alignment alternatives and 6 concourse concepts. Based on the screening process, this section also identifies the track alignment alternative and concourse concept that was recommended for detailed evaluation as a Build Alternative in this EIS. The alternatives considered in this memorandum evolved over the past 7 years of Project planning/development, and have been developed as a result of substantial public, agency, and stakeholder feedback received during the initial Link US Project joint EIS/EIR process (not completed), the standalone EIR process (completed June 2019), CHSRA's environmental processes for the Burbank to Los Angeles and Los Angeles to Anaheim Project Sections of the planned HSR system (Burbank to Los Angeles EIR/EIS completed March 2022), and the Link US Project standalone EIS process.

Track Alignment Alternative Screening Criteria

1. **Accommodate 10 Run-Through Tracks from LAUS to West Bank of Los Angeles River:** Track alignment alternatives that do not accommodate six run-through tracks for

regional/intercity trains and four run-through tracks for HSR trains from LAUS to the west bank of the Los Angeles River were rejected from further consideration because they would constrain and limit flexibility to achieve the increases in train movements and associated passenger volumes forecasted by existing (SCRRA, Amtrak, Los Angeles-San Diego-San Luis Obispo [LOSSAN]) and future (CHSRA) operators at LAUS.

2. **Avoid Shared Lead Tracks for Freight Trains and Intercity Trains at BNSF West Bank Yard:** Track alignment alternatives that require BNSF freight trains to share the same tracks as Amtrak trains at the BNSF West Bank Yard were rejected from further consideration due to the potential impacts on intermodal freight operations as well as Amtrak on time performance to and from LAUS.
3. **Avoid Lowering the Existing Red and Purple Line Subway:** Track alignment alternatives that require lowering of the existing Red and Purple Line subway were rejected from further consideration due to the transit service disruptions during construction that could extend over years thereby affecting a high volume of passengers. In addition, lowering of the Red and Purple Line subway would result in substantially higher construction costs that could exceed allocated public funds.
4. **Avoid Lowering the US-101 and the El Monte Busway:** Track alignment alternatives that require lowering of US-101 and the El Monte Busway were rejected from further consideration due to design criteria requirements, substantially higher construction costs, and the multiple years of traffic and transit service disruptions during construction.
5. **Avoid Stacking Platforms for Regional/Intercity Rail Trains and High-Speed Rail Trains:** Track alignment alternatives that require stacking platforms for regional/intercity rail trains and HSR trains were rejected from further consideration due to design criteria requirements (vertical grade and curvature requirements).
6. **Avoid Adding an Eighth Platform for Regional/Intercity Rail Trains or High-Speed Rail Trains:** Track alignment alternatives that require an eighth platform were rejected from further consideration due to right-of-way (ROW) impacts and the multiple years of transit service disruptions during construction that would affect a high volume of passengers.

Concourse Concepts Screening Criteria

1. **Add Passenger Capacity:** Passenger concourse concepts that would not add passenger capacity, in the form of additional physical space, were rejected from further consideration because they would not support increased frequency of service and ridership or provide an easily navigable environment for passengers.
2. **Provide Egress Routes and Safe Evacuation**: Passenger concourse concepts that would not meet National Fire Protection Association (NFPA) 130 performance requirements (NFPA Standard for Fixed Guideway Transit and Passenger Rail Systems 2020 edition) were rejected from further consideration because they do not provide

adequate egress routes for safe evacuation of passengers from platforms within 15 minutes.

3. **Enhance Passenger Safety and Accessibility:** Passenger concourse concepts that would not include new vertical circulation elements (VCE) throughout LAUS were rejected from further consideration because they do not enhance safety and Americans with Disabilities Act (ADA) accessibility for passengers.
4. **Optimize Concourse Space and Back-of-House Operations:** Passenger concourse concepts that would not optimize the organization of space for concourse operations were rejected from further consideration because they would not provide for the separation of public passenger spaces from back-of-house operational/maintenance spaces, improve baggage handling operations by optimizing pick-up and drop-off operations, or provide an enhanced passenger experience with new amenities.
5. **Maintain or Improve Passenger Transfer Times:** Passenger concourse concepts that would not maintain or improve current passenger transfer times between transportation connections were rejected from further consideration because transfer times would be longer than in the existing condition.
6. **Align with Community Preference:** Passenger concourse concepts that include an above-grade component were rejected from further consideration because they do not align with the overwhelming community feedback on the configuration of the passenger circulation space.

Track Alignment Alternatives and Concourse Concepts Considered

Any track alignment alternative or passenger concourse concept that did not meet all screening criteria noted above was rejected from further consideration. As summarized in Table ES-2 and Table ES-3, 14 track alignment alternatives were screened, of which 13 were rejected; and 6 concourse concepts were screened, of which 5 were rejected. The 14 track alignment alternatives and 6 passenger concourse concepts are depicted in Attachments A and B, respectively.

(THIS PAGE INTENTIONALLY LEFT BLANK)

Table ES-2. Track Alignment Alternatives Screening Summary

Track Alignment Alternative	Meets Screening Criteria						Screening Outcome
	1	2	3	4	5	6	
1. 4 Regional/Intercity Rail Run-Through Tracks + 2 HSR Run-Through Tracks - The track alignment includes seven lead tracks north of LAUS (two dedicated tracks for HSR trains outside existing railroad ROW); removal of the Garden Tracks; permanent realignment of the Gold Line north of LAUS; five platforms for regional/intercity rail trains, one platform for HSR trains, and one platform for the Gold Line LRT; a common bridge over the El Monte Busway and US-101; a common embankment south of Commercial Street extending to Center Street; lowering the intersection of Center Street and Commercial Street; two separate bridges over Center Street and the Amtrak lead track; two separate rail embankments on the west bank of the Los Angeles River with lowering and reconstruction of storage tracks at the BNSF West Bank Yard; shared lead tracks for BNSF and Amtrak trains at the BNSF West Bank Yard; four regional/intercity rail run-through tracks (with a single loop track); and accommodation for two HSR run-through tracks from LAUS to First Street.	**No**	**No**	Yes	Yes	Yes	Yes	Rejected from further consideration – includes 6 total run-through tracks and shared lead tracks for BNSF freight trains and Amtrak trains at the BNSF West Bank Yard.
2. 4 Regional/Intercity Rail Run-Through Tracks + 4 HSR Run-Through Tracks - The track alignment includes seven lead tracks north of LAUS (two dedicated tracks for HSR trains outside existing railroad ROW); removal of the Garden Tracks; permanent realignment of the Gold Line north of LAUS; four platforms for regional/intercity rail trains, two platforms for HSR trains, and one platform for the Gold Line LRT; a common bridge over the El Monte Busway and US-101; a common embankment south of Commercial Street extending to Center Street; lowering the intersection of Center Street and Commercial Street; two separate bridges over Center Street and the Amtrak lead track;	**No**	**No**	Yes	Yes	Yes	Yes	Rejected from further consideration – includes 8 total run-through tracks and shared lead tracks for BNSF freight trains and Amtrak trains at the BNSF West Bank Yard.

Table ES-2. Track Alignment Alternatives Screening Summary

Track Alignment Alternative	Meets Screening Criteria						Screening Outcome
	1	2	3	4	5	6	
two separate rail embankments on the west bank of the Los Angeles River with lowering and reconstruction of storage tracks at the BNSF West Bank Yard; shared lead tracks for BNSF and Amtrak trains at the BNSF West Bank Yard; four regional/intercity rail run-through tracks (with a single loop track); and accommodation for four HSR run-through tracks from LAUS to First Street.							
3. 5 Regional/Intercity Rail Run-Through Tracks + 2 HSR Run-Through Tracks - The track alignment includes seven lead tracks north of LAUS (two dedicated tracks for HSR trains outside existing railroad ROW); removal of the Garden Tracks; permanent realignment of the Gold Line north of LAUS; five platforms for regional/intercity rail trains, one platform for HSR trains, and one platform for the Gold Line LRT; a common bridge over the El Monte Busway and US-101; a common embankment south of Commercial Street extending to Center Street; lowering the intersection of Center Street and Commercial Street; two separate bridges over Center Street and the Amtrak lead track; two separate rail embankments on the west bank of the Los Angeles River with lowering and reconstruction of storage tracks at the BNSF West Bank Yard; shared lead tracks for BNSF and Amtrak trains at the BNSF West Bank Yard; five regional/intercity rail run-through tracks (with a single loop track); and accommodation for two HSR run-through tracks from LAUS to First Street.	**No**	**No**	Yes	Yes	Yes	Yes	Rejected from further consideration – includes 7 total run-through tracks and shared lead tracks for BNSF freight trains and Amtrak trains at the BNSF West Bank Yard.
4. 5 Regional/Intercity Rail Run-Through Tracks + 4 HSR Run-Through Tracks - The track alignment includes seven lead tracks north of LAUS (two dedicated tracks for HSR trains outside existing railroad ROW); removal of the Garden Tracks; permanent realignment	**No**	**No**	Yes	Yes	Yes	Yes	Rejected from further consideration – includes 9 total run-through tracks and shared lead tracks for BNSF freight

Table ES-2. Track Alignment Alternatives Screening Summary

Track Alignment Alternative	Meets Screening Criteria						Screening Outcome
	1	2	3	4	5	6	
of the Gold Line north of LAUS; four platforms for regional/intercity rail trains; two platforms for HSR trains, and one platform for the Gold Line LRT; a common bridge over the El Monte Busway and US-101; a common embankment south of Commercial Street extending to Center Street; lowering the intersection of Center Street and Commercial Street; two separate bridges over Center Street and the Amtrak lead track; two separate rail embankments on the west bank of the Los Angeles River with lowering and reconstruction of storage tracks at the BNSF West Bank Yard; shared lead tracks for BNSF and Amtrak trains at the BNSF West Bank Yard; five regional/intercity rail run-through tracks (with a single loop track); and accommodation for four HSR run-through tracks from LAUS to First Street.							trains and Amtrak trains at the BNSF West Bank Yard.
5. 6 Regional/Intercity Rail Run-Through Tracks + 2 HSR Run-Through Tracks (with dedicated lead tracks north of LAUS) - The track alignment includes seven lead tracks north of LAUS (two dedicated tracks for HSR trains outside existing railroad ROW); removal of the Garden Tracks; permanent realignment of the Gold Line north of LAUS; five platforms for regional/intercity rail trains, one platform for HSR trains, and one platform for the Gold Line LRT; a common bridge over the El Monte Busway and US-101; a common embankment south of Commercial Street extending to Center Street; lowering the intersection of Center Street and Commercial Street; two separate bridges over Center Street and the Amtrak lead track; two separate rail embankments on the west bank of the Los Angeles River with lowering and reconstruction of storage tracks at the BNSF West Bank Yard; shared lead tracks for BNSF and Amtrak trains at the BNSF	**No**	**No**	Yes	Yes	Yes	Yes	Rejected from further consideration – includes 8 total run-through tracks and shared lead tracks for BNSF freight trains and Amtrak trains at the BNSF West Bank Yard.

Table ES-2. Track Alignment Alternatives Screening Summary

Track Alignment Alternative	Meets Screening Criteria						Screening Outcome
	1	2	3	4	5	6	
West Bank Yard; six regional/intercity rail run-through tracks (with a single loop track); and accommodation for two HSR run-through tracks from LAUS to First Street.							
6. 6 Regional/Intercity Rail Run-Through Tracks + 2 HSR Run-Through Tracks (with shared lead tracks north of LAUS) - The track alignment includes six lead tracks north of LAUS (two shared tracks for regional/intercity rail trains and HSR trains); removal of the Garden Tracks, four platforms for regional/intercity rail trains, one platform for HSR trains, and one platform for the Gold Line LRT; a common bridge over the El Monte Busway and US-101; a common embankment where Commercial Street currently exists, extending to Center Street; lowering the intersection of Center Street and Commercial Street; realignment of Commercial Street; two separate bridges over Center Street and the Amtrak lead track; two separate rail embankments on the west bank of the Los Angeles River with lowering and reconstruction of storage tracks at the BNSF West Bank Yard; shared lead tracks for BNSF and Amtrak trains at the BNSF West Bank Yard; six regional/intercity rail run-through tracks and (with a single loop track); and accommodation for two HSR run-through tracks from LAUS to First Street.	**No**	**No**	Yes	Yes	Yes	Yes	Rejected from further consideration – includes 8 total run-through tracks and shared lead tracks for BNSF freight trains and Amtrak trains at the BNSF West Bank Yard.
7. 6 Regional/Intercity Rail Run-Through Tracks + 4 HSR Run-Through Tracks (with dedicated lead tracks north of LAUS) - The track alignment includes seven lead tracks north of LAUS (two dedicated tracks for HSR trains outside existing railroad ROW); removal of the Garden Tracks; permanent realignment of the Gold Line north of LAUS; four platforms for regional/intercity rail trains, two platforms for HSR trains,	Yes	**No**	Yes	Yes	Yes	Yes	Rejected from further consideration – includes shared lead tracks for BNSF freight trains and Amtrak trains at the BNSF West Bank Yard.

Table ES-2. Track Alignment Alternatives Screening Summary

Track Alignment Alternative	Meets Screening Criteria						Screening Outcome
	1	2	3	4	5	6	
and one platform for the Gold Line LRT; a common bridge over the El Monte Busway and US-101; a common embankment south of Commercial Street extending to Center Street; lowering the intersection of Center Street and Commercial Street; two separate bridges over Center Street and the Amtrak lead track; two separate rail embankments on the west bank of the Los Angeles River with lowering and reconstruction of storage tracks at the BNSF West Bank Yard; shared lead tracks for BNSF and Amtrak trains at the BNSF West Bank Yard; six regional/intercity rail run-through tracks (with a single loop track); and accommodation for four HSR run-through tracks from LAUS to First Street.							
8. 6 Regional/Intercity Rail Run-Through Tracks + 4 HSR Run-Through Tracks (with double loop tracks) - The track alignment includes seven lead tracks north of LAUS (two dedicated tracks for HSR trains outside existing railroad ROW); removal of the Garden Tracks; permanent realignment of the Gold Line north of LAUS; four platforms for regional/intercity rail trains, two platforms for HSR trains, and one platform for the Gold Line LRT; a common bridge over the El Monte Busway and US-101; a common embankment south of Commercial Street extending to Center Street; lowering the intersection of Center Street and Commercial Street; two separate bridges over Center Street and the Amtrak lead track; two separate rail embankments on the west bank of the Los Angeles River with lowering and reconstruction of storage tracks at the BNSF West Bank Yard; shared lead tracks for BNSF and Amtrak trains at the BNSF West Bank Yard; six regional/intercity rail run-through tracks (with two loop tracks); and	Yes	**No**	Yes	Yes	Yes	Yes	Rejected from further consideration – includes shared lead tracks for BNSF freight trains and Amtrak trains at the BNSF West Bank Yard.

Table ES-2. Track Alignment Alternatives Screening Summary

Track Alignment Alternative	Meets Screening Criteria						Screening Outcome
	1	2	3	4	5	6	
accommodation for four HSR run-through tracks from LAUS to First Street.							
9. 6 Regional/Intercity Rail Run-Through Tracks + 4 HSR Run-Through Tracks (with shared lead tracks north of LAUS) - The track alignment includes six lead tracks north of LAUS (two shared tracks for regional/intercity rail trains and HSR trains); removal of the Garden Tracks; four platforms for regional/intercity rail trains; two platforms for HSR trains, and one platform for the Gold Line LRT; a common bridge over the El Monte Busway and US-101; a common embankment where Commercial Street currently exists extending to Center Street; lowering the intersection of Center Street and Commercial Street; realignment of Commercial Street; two separate bridges over Center Street and the Amtrak lead track; two separate rail embankments on the west bank of the Los Angeles River with lowering and reconstruction of storage tracks at the BNSF West Bank Yard; shared lead tracks for BNSF and Amtrak trains at the BNSF West Bank Yard; six regional/intercity rail run-through tracks (with a single loop track); and accommodation for four HSR run-through tracks from LAUS to First Street.	Yes	**No**	Yes	Yes	Yes	Yes	Rejected from further consideration – includes shared lead tracks for BNSF freight trains and Amtrak trains at the BNSF West Bank Yard.
10. 6 Regional/Intercity Rail Run-Through Tracks + 2 HSR Run-Through Tracks (with HSR double decked) - The track alignment includes seven lead tracks north of LAUS (two dedicated tracks for HSR trains outside existing railroad ROW); removal of the Garden Tracks; four platforms for regional/intercity rail trains, one platform for HSR trains above the existing platform for the Gold Line LRT; two separate bridges over the El Monte Busway and US-101; two separate overhead	**No**	**No**	Yes	Yes	**No**	Yes	Rejected from further consideration – includes 8 total run-through tracks, shared lead tracks for BNSF freight trains and Amtrak trains at the West Bank Yard, and double deck platforms.

Table ES-2. Track Alignment Alternatives Screening Summary

Track Alignment Alternative	Meets Screening Criteria						Screening Outcome
	1	2	3	4	5	6	
viaducts over and south of Commercial Street; lowering the intersection of Center Street and Commercial Street; two separate bridges over Center Street and the Amtrak lead track; two separate rail embankments on the west bank of the Los Angeles River with lowering and reconstruction of storage tracks at the BNSF West Bank Yard; shared lead tracks for BNSF and Amtrak trains at the BNSF West Bank Yard; six regional/intercity rail run-through tracks (with a single loop track); and accommodation for two HSR run-through tracks from LAUS to First Street.							
11. 6 Regional/Intercity Rail Run-Through Tracks + 4 HSR Run-Through Tracks (with permanent realignment of Gold Line due to addition of eighth platform) - The track alignment includes six lead tracks north of LAUS (two shared tracks for HSR trains outside existing railroad ROW); removal of the Garden Tracks; permanent realignment of the Gold Line north and south of LAUS; modification to the existing Gold Line viaduct over US-101; five platforms for regional/intercity rail trains, two platforms for HSR trains, and one platform for the Gold Line LRT; two separate bridges over the El Monte Busway and US-101; two separate overhead viaducts over and south of Commercial Street; lowering the intersection of Center Street and Commercial Street; two separate bridges over Center Street and the Amtrak lead track; two separate rail embankments on the west bank of the Los Angeles River with lowering and reconstruction of storage tracks at the BNSF West Bank Yard; shared lead tracks for BNSF and Amtrak trains at the BNSF West Bank Yard; six regional/intercity rail run-through tracks (with a single loop track); and	Yes	**No**	Yes	Yes	Yes	**No**	Rejected from further consideration – includes shared lead tracks for BNSF freight trains and Amtrak trains at the BNSF West Bank Yard and an eighth platform at LAUS.

Table ES-2. Track Alignment Alternatives Screening Summary

Track Alignment Alternative	Meets Screening Criteria						Screening Outcome
	1	2	3	4	5	6	
accommodation for four HSR run-through tracks from LAUS to First Street.							
12. 6 Regional/Intercity Rail Run-Through Tracks + 4 HSR Run-Through Tracks (with shared lead tracks north of LAUS, no loop track, and shared lead tracks for BNSF freight trains and Amtrak trains) - The track alignment includes six lead tracks north of LAUS (two shared tracks for regional/intercity rail trains and HSR trains); removal of the Garden Tracks; four platforms for regional/intercity rail trains, two platforms for HSR trains, and one platform for the Gold Line LRT; a common bridge over the El Monte Busway and US-101; a common embankment north of Commercial Street extending to Center Street; a common bridge over Center Street; a common embankment east of Center Street and common bridge over the Amtrak lead track; a common embankment on the west bank of the Los Angeles River extending to the 1st Street Bridge; permanent removal of 5,565 feet of BNSF storage tracks at the north end of the West Bank Yard; shared lead tracks for BNSF and Amtrak trains at the BNSF West Bank Yard; six regional/intercity rail run-through tracks (no loop track); and accommodation for four HSR run-through tracks from LAUS to First Street. No lowering of Center Street or realignment of Commercial Street is required. BNSF storage tracks would not be reconstructed resulting in a permanent loss of storage track capacity at the BNSF West Bank Yard.	Yes	**No**	Yes	Yes	Yes	Yes	Rejected from further consideration - includes shared lead tracks for BNSF freight trains and Amtrak trains at the BNSF West Bank Yard.
13. 6 Regional/Intercity Rail Run-Through Tracks +4 HSR Run-Through Tracks (with dedicated lead tracks north of LAUS, loop track, and shared lead tracks for BNSF freight trains and Amtrak trains) -	Yes	**No**	Yes	Yes	Yes	Yes	Rejected from further consideration - includes shared lead tracks for BNSF

Table ES-2. Track Alignment Alternatives Screening Summary

Track Alignment Alternative	Meets Screening Criteria						Screening Outcome
	1	2	3	4	5	6	
The track alignment includes seven lead tracks north of LAUS (two dedicated tracks for HSR trains outside existing railroad ROW); removal of the Garden Tracks; four platforms for regional/intercity rail trains, two platforms for HSR trains, and one platform for the Gold Line LRT; a common bridge over the El Monte Busway and US-101; a common embankment where Commercial Street currently exists extending to Center Street; lowering the intersection of Center Street and Commercial Street; realignment of Commercial Street; separate bridges over Center Street for regional/intercity trains and HSR trains; an embankment for regional/intercity rail trains and separate viaduct for HSR trains east of Center Street; a common bridge over the Amtrak lead track; a common embankment on the west bank of the Los Angeles River extending to the 1st Street Bridge; permanent removal of 5,565 feet of BNSF storage tracks at the north end of the West Bank Yard; shared lead tracks for BNSF and Amtrak trains at the BNSF West Bank Yard; six regional/intercity rail run-through tracks (with a single loop track); and accommodation for four HSR run-through tracks from LAUS to First Street. Similar to Alternative 12, BNSF storage tracks would not be reconstructed resulting in a permanent loss of storage track capacity at the BNSF West Bank Yard.							freight trains and Amtrak trains at the BNSF West Bank Yard.
14. 6 Regional/Intercity Rail Run-Through Tracks + 4 HSR Run-Through Tracks (with shared lead tracks north of LAUS, no loop track, and dedicated lead tracks for BNSF freight trains and Amtrak trains) - The track alignment includes six lead tracks north of LAUS (two shared tracks for regional/intercity rail trains and HSR trains); removal of the Garden Tracks; four	Yes	Yes	Yes	Yes	Yes	Yes	Recommended to be carried forward for detailed evaluation in EIS.

Table ES-2. Track Alignment Alternatives Screening Summary

Track Alignment Alternative	Meets Screening Criteria						Screening Outcome
	1	2	3	4	5	6	
platforms for regional/intercity rail trains, two platforms for HSR trains, and one platform for the Gold Line LRT; a common bridge over the El Monte Busway and US-101; a common embankment north of Commercial Street extending to Center Street; a common bridge over Center Street; common embankments and/or bridges east of Center Street; a common bridge over the Amtrak lead track; a common embankment on the west bank of the Los Angeles River extending to the 1st Street Bridge; permanent removal of 5,500 feet of BNSF storage tracks at the north end of the West Bank Yard; dedicated lead tracks for BNSF and Amtrak trains at the BNSF West Bank Yard; six regional/intercity rail run-through tracks (no loop track); and accommodation for four HSR run-through tracks from LAUS to First Street. No lowering of Center Street or realignment of Commercial Street is required. Similar to Alternatives 12 and 13, BNSF storage tracks would not be reconstructed resulting in a permanent loss of storage track capacity at the BNSF West Bank Yard.							

Notes:
Embankments and/or bridges with associated civil/railroad infrastructure south of LAUS could be constructed in a phased manner.
EIS=environmental impact statement; HSR=high-speed rail; LAUS=Los Angeles Union Station

Table ES-3. Passenger Concourse Concepts Screening Summary

Passenger Concourse Concept	Meets Screening Criteria						Screening Outcome
	1	2	3	4	5	6	
Concourse Concept 1 (Maintain Passageway Concourse) - This concept would preserve the existing pedestrian passageway by maintaining the existing passageway, its utilities, and structure. Passenger loading platforms would be accessible via stairs and ramps, similar to existing conditions. Ramps servicing the platforms would be reconstructed to accommodate the vertical rise of the new top of rail and would be nearly 300 feet in length. The existing entrance and exit portals along the pedestrian passageway walls would be relocated to support the widened platforms, and the pedestrian passageway ceiling would also need to be reconstructed.	**No**	**No**	**No**	**No**	**No**	Yes	Rejected from further consideration – no added capacity, does not meet egress and safe evacuation requirements, no enhanced ADA accessibility, no improvements to baggage handling or separation of public and back-of-house spaces, and does not maintain or improve passenger transfer times.
Concourse Concept 2 (Widened Passageway Concourse) - This concept would widen the existing pedestrian passageway to a width of approximately 90 feet. The floor elevation would remain unchanged from the existing passageway. The widened passageway would be limited to passenger circulation and would not allow for station amenities, such as restrooms, waiting areas, information kiosks, retail space, or enhanced baggage handling services. The concept would require demolition of the existing north and south ramps and stairs and would eliminate the historic pedestrian passageway walls to allow access to a wider passageway area.	Yes	**No**	**No**	**No**	**No**	Yes	Rejected from further consideration – does not meet egress and safe evacuation requirements, no enhanced ADA accessibility, no improvements to baggage handling or separation of public and back-of-house spaces, and does not maintain or improve passenger transfer times.
Concourse Concept 3 (At-Grade Concourse) - This concept would result in a new passenger concourse below the tracks with a minimum head clearance of 10 feet, 6 inches. This concept would require the temporary relocation of the Gold Line with a temporary platform while Platform 1 is raised, widened, and	Yes	Yes	Yes	Yes	Yes	Yes	Rejected from further consideration – Although this concourse concept meets all screening criteria, this concept is not feasible and removed from further consideration due to cost and potential for increased environmental impacts

Table ES-3. Passenger Concourse Concepts Screening Summary

Passenger Concourse Concept	Meets Screening Criteria						Screening Outcome
	1	2	3	4	5	6	
lengthened. For this concept, a structural system of girders would support the Gold Line platform and rail to create a wider, more open concourse space below. The installation of girders would require the Gold Line Platform 1 and Tracks 1 and 2 to be replaced in their entirety. In addition, the depth of proposed concrete girders requires the Gold Line Platform 1 be elevated to achieve a more desirable concourse height. The addition of East and West Plazas would provide opportunities for new open spaces and terraces. It would include additional space for transit amenities such as waiting areas, restrooms, retail areas, and other ancillary support functions.							related to emissions and traffic during construction, archaeological resources, contaminated soils, and contaminated groundwater as disclosed in the Final EIR for the Link US Project. A summary of the increased environmental impacts, as disclosed in Metro's Final EIR are as follows: • The emissions during construction of an at-grade concourse would expose sensitive land uses to an increased cancer risk of more than 10 in 1 million for total diesel particulate matter (PM_{10}). • The at-grade concourse would require additional truck trips and construction traffic resulting in more significant delays at nearby intersections • The at-grade concourse would require substantially more excavation activities and would result in a greater potential for encountering archeological resources, contaminated soils, and contaminated groundwater during construction.
Concourse Concept 4 (Above-Grade Concourse) - This concept would include an elevated component roughly 90 feet above the grade of the existing passageway. The above-grade concourse would span	Yes	Yes	Yes	Yes	**No**	**No**	Rejected from further consideration – includes an above-grade component that does not maintain or improve

Table ES-3. Passenger Concourse Concepts Screening Summary

Passenger Concourse Concept	Meets Screening Criteria						Screening Outcome
	1	2	3	4	5	6	
over the platforms and offer transit amenities such as waiting areas, lounges, and retail space while also meeting the egress capacity needs for the projected ridership growth. The concept would allow for high ceilings and maximize panoramic views of Downtown Los Angeles. The existing pedestrian passageway would be demolished.							passenger transfer times or align with community preferences
Concourse Concept 5 (Above-Grade Concourse with New Expanded Passageway) - This concept would include an elevated structure roughly 90 feet above the grade of the existing passageway. The elevated portion would span over the platforms and offer transit amenities such as waiting areas, lounges, and retail space while also meeting the egress capacity needs for the projected ridership growth. The concept would allow for high ceilings and maximize panoramic views of Downtown Los Angeles. Additionally, it also includes a 120-foot-wide expanded passageway below the rail yard that would be four times the width of the existing pedestrian passageway.	Yes	Yes	Yes	Yes	**No**	**No**	Rejected from further consideration – includes an above-grade component that does not maintain or improve passenger transfer times or align with community preferences
Concourse Concept 6 (Expanded Passageway) - This concept would include widening of the existing 28-foot-wide pedestrian passageway to a 140-foot-wide passageway below the rail yard to provide safe and accessible circulation through LAUS with modern passenger accommodations. New VCEs (stairs, escalators, and elevators) would provide connectivity from the expanded passageway that is at grade and below the rail yard to the passenger platforms above. The addition of East and West Plazas would provide opportunities for new open spaces and terraces. It would include additional space for transit amenities	Yes	Yes	Yes	Yes	Yes	Yes	Recommended to be carried forward for detailed evaluation in EIS.

Table ES-3. Passenger Concourse Concepts Screening Summary

Passenger Concourse Concept	Meets Screening Criteria						Screening Outcome
	1	2	3	4	5	6	
such as waiting areas, restrooms, retail areas, and other ancillary support functions.							

Notes:
ADA=Americans with Disabilities Act; EIS=environmental impact statement

Recommended Track Alignment Alternatives and Concourse Concepts for Detailed Evaluation

As summarized in Table ES-2 and Table ES-3, at the conclusion of the screening process, one track alignment alternative and one concourse concept was recommended for detailed evaluation as the Build Alternative in the Draft EIS. Table ES-4 identifies the major components of the track alignment alternative and concourse concept recommended for detailed evaluation in the Draft EIS.

Table ES-4. Track Alignment Alternative and Concourse Concept Recommended for Detailed Evaluation in Draft EIS

Screening Name	Description Summary
Track Alignment Alternative 14	• Shared lead tracks north of LAUS • Common bridges and embankments with associated civil/railroad infrastructure that would accommodate six run-through tracks for regional/intercity rail trains and 4 run-through tracks for high speed rail trains from LAUS to the west bank of the Los Angeles River • Dedicated lead tracks for BNSF freight trains and Amtrak trains at BNSF West Bank Yard
Concourse Concept 6 (Expanded Passageway)	• 140-foot-wide expanded passageway • New VCEs (stairs, escalators, and elevators) • East and West Plazas

Notes:
HSR=high-speed rail; VCE=vertical circulation element

Based on the screening process, one build alternative is proposed for further evaluation in the Draft EIS, in addition to the No Action Alternative. The major Project components are grouped together as one build alternative for ease of evaluation in the Draft EIS. The alternatives proposed to be considered are summarized below:

- **No Action Alternative** – The No Action Alternative is the baseline against which the effect of implementing the Build Alternative is evaluated to determine the extent of environmental and community effects. For the No Action Alternative, the baseline year is 2016 and the horizon year is 2040. The No Action Alternative represents the future conditions that would occur if the proposed infrastructure improvements and the operational capacity enhancements at LAUS were not implemented, and reflects the foreseeable effects of growth planned for the area in conjunction with other existing, planned, and reasonably foreseeable projects and infrastructure improvements
- **Build Alternative** – The Build Alternative would include a shared lead track alignment north of LAUS, a 140-foot-wide expanded passageway below the rail yard, and common bridges and embankments with associated civil/railroad infrastructure that would

accommodate six run-through tracks for regional/intercity rail trains and four run-through tracks for HSR trains from LAUS to the west bank of the Los Angeles River. The Build Alternative also includes dedicated lead tracks for BNSF freight trains and Amtrak trains at BNSF West Bank Yard.

1.0 Introduction

NEPA requires that an EIS "rigorously explore and objectively evaluate all reasonable alternatives" and "devote substantial treatment to each alternative considered in detail so that reviewers may evaluate their comparative merits" (40 Code of Federal Regulations Section 1502.14).[4]

The purpose of this memorandum is to describe the alternatives analysis process undertaken for the Link US Project to determine a reasonable range of alternatives that meet the purpose and need for detailed evaluation in the Link US Project EIS. The alternatives considered in this memorandum evolved over the past 7 years of Project planning/development, and have been developed as a result of substantial public, agency, and stakeholder feedback received during the initial Link US Project joint EIS/EIR process (not completed), the standalone EIR process (completed June 2019), CHSRA's environmental processes for the Burbank to Los Angeles and Los Angeles to Anaheim Project Sections of the planned HSR system (Burbank to Los Angeles EIR/EIS completed March 2022), and the Link US Project standalone EIS process.

This memorandum provides the planning context and background information for development of the track alignments and concourse-related improvements, describes the range of track alignment alternatives and concourse concepts considered, and provides a full evaluation to determine how the track alignment alternatives and concourse concepts perform against the applicable criteria. Based on the results of the screening process, this memorandum also identifies the track alignment alternative and concourse concept recommended for full evaluation in the Link US Project EIS.

1.1 Lead Agency Roles

Metro is the regional transportation planning agency responsible for administering public transportation in the Los Angeles metropolitan area. Metro is proposing the infrastructure improvements associated with the Link US Project to address existing capacity constraints at LAUS. For the purposes of NEPA, Metro is serving as the local project sponsor and joint lead agency.

CHSRA is responsible for the planning, design, construction, and operation of the planned HSR system. A July 2019 Memorandum of Understanding between FRA and the State of California, pursuant to 23 United States Code Section 327, assigned CHSRA FRA's responsibilities under NEPA and other federal environmental laws for projects on the HSR system and other passenger

[4] The CEQ issued new regulations, effective April 20, 2022, updating the NEPA implementing procedures at 40 CFR Parts 1500–1508. However, because this environmental document was initiated prior to the effective date, it is not subject to the new regulations and CHSRA is relying on the regulations as they existed on the date of the initial Notice of Intent, May 31, 2016. Therefore, all citations to CEQ regulations in this environmental document refer to the 1978 regulations and the 1986 amendment, 51 *Federal Register* 15618 (Apr. 25, 1986)..

rail projects that directly connect to the HSR system, including the Link US Project. For the purposes of NEPA, CHSRA is serving as the federal lead agency.

1.2 Purpose and Need

1.2.1 Purpose

The purpose of the proposed action is to increase the regional and intercity rail service capacity of LAUS and to improve schedule reliability at LAUS through the implementation of a run through tracks configuration and elimination of the current stub end tracks configuration while preserving current levels of freight rail operations, accommodating the planned HSR system in Southern California, increasing the passenger/pedestrian capacity and enhancing the safety of LAUS through the implementation of a new passenger concourse, meeting the multimodal transportation demands at LAUS.

Run-Through Tracks

Tracks that allow trains to run-through LAUS as opposed to terminating at LAUS.

Ten run-through tracks extend south of LAUS Platforms 2 through 6 and merge into a minimum of four tracks crossing US-101 on the viaduct and continue south.

1.2.2 Need

The need for the proposed action is generated by the forecasted increase in regional population and employment; implementation of federal, state, and regional transportation plans that provide for increased operational frequency for regional and intercity trains; and introduction of the planned HSR system in Southern California. Localized operational, safety, and accessibility upgrades in and around LAUS will be required to meet existing demand and future growth.

2.0 Planning Context and Background

Since 2002, various iterations of the major Project components associated with the Link US Project have been developed, evaluated, and refined. The planning context is described below to provide background for the development of the major components associated with track alignment alternatives and concourse concepts considered. Previous iterations of the Link US Project include the Run-Through Tracks Project and Southern California Regional Interconnector Project (SCRIP).

2.1 Run-Through Tracks Project

In 2002, California Department of Transportation (Caltrans) and FRA (in cooperation with Amtrak) initiated conceptual engineering and preparation of an EIS/EIR for a capacity improvement project known as the Run-Through Tracks Project. The results of the 2002 Run-Through Tracks Project Alternatives Analysis Report revealed the preferable configuration for run-through tracks south of LAUS is an alignment parallel to US-101 along Commercial Street toward the main line tracks in an s-shaped band configuration (Figure 2-1). This s-shaped band was selected as the optimal configuration largely because of the curvature required to maintain safe rail operations, the projected cost-benefit analysis, and avoided and/or reduced environmental effects associated with air quality, community services, cultural resources, geology/seismicity, noise, and traffic.

Main Line Tracks

Tracks along the Los Angeles River providing trains access to LAUS are considered artery lines within the system and connect multiple towns. As part of the Project, run-through tracks south of LAUS are proposed to connect to the main line tracks along the west bank of the Los Angeles River.

Figure 2-1. S-Shaped Band Configuration of Run-Through Tracks Project

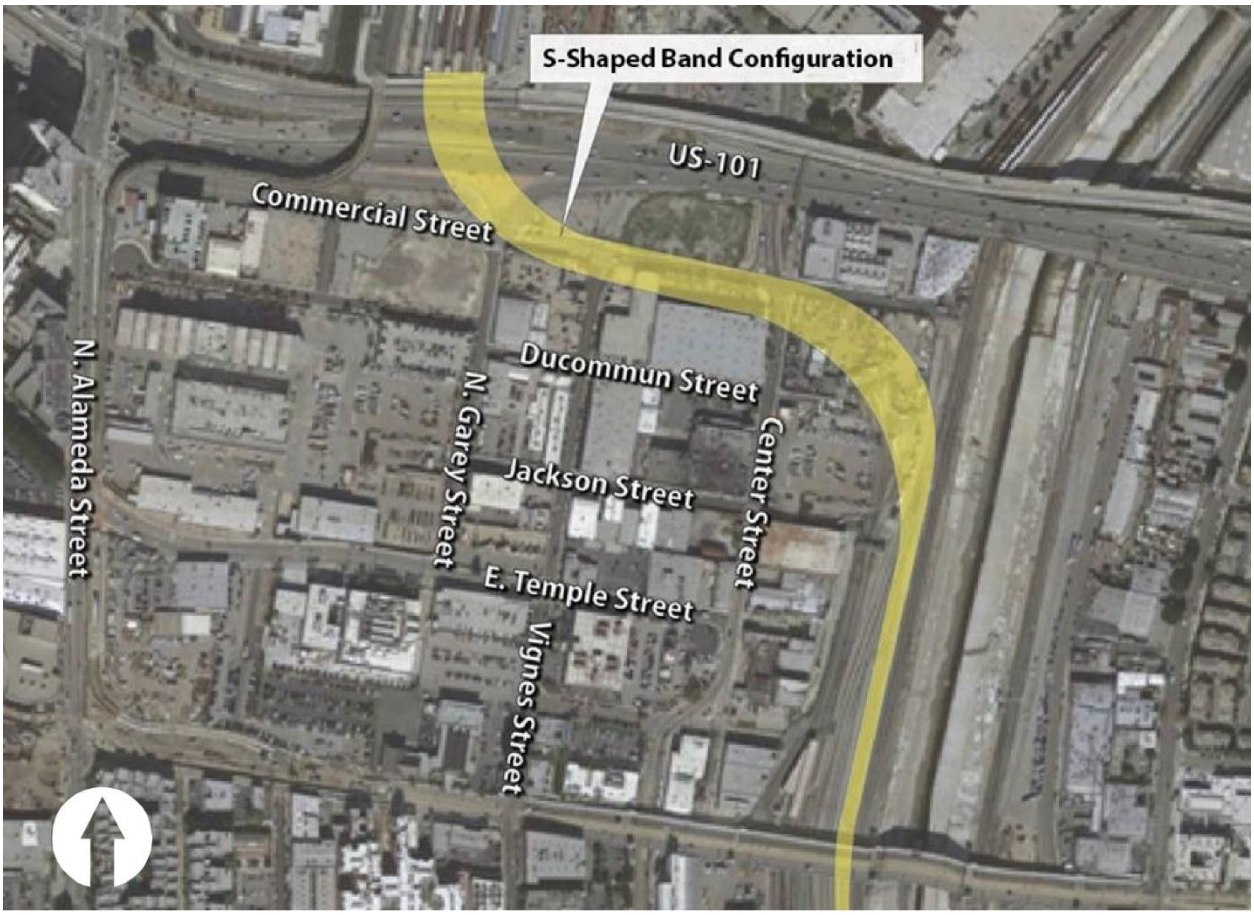

Source: Caltrans and FRA 2002Applicable findings from the Run-Through Tracks Project provided the basis for evaluation of run-through track alignments along Commercial Street (compared with track alignments on parallel streets south of Commercial Street) for the following reasons:

- ROW impacts would primarily affect industrial properties, not residential properties.
- Noise and vibration impacts are anticipated to be minimized due to the distance and quantity of sensitive receptors adjacent to the track alignments.
- Visual and historic resources impacts would be reduced because a structure that would cross above the historic 1st Street Bridge is not required.

In 2005, FRA issued a Final EIS, and Caltrans certified the Final EIR for the Run-Through Tracks Project (Caltrans and FRA 2005). FRA did not issue a Record of Decision after the Final EIS was completed. The run-through tracks associated with the preferred alternative in the Run-Through Tracks Project Final EIS/EIR was located north of Commercial Street within the s-shaped band configuration shown on Figure 2-1. The planned HSR system was not part of the Run-Through Tracks Project.

2.2 Southern California Regional Interconnector Project

Following completion of the environmental review process for the Run-Through Tracks Project, numerous changes in area planning required a change in how planned improvements to the LAUS infrastructure would be implemented. These changes included:

- **Change in ownership of LAUS** – In 2011, Metro purchased LAUS from Catellus Operating Limited Partnership. In 2012, Metro began a master planning effort for the LAUS campus and surrounding areas (i.e., LAUS Master Plan). The LAUS Master Plan includes 38 acres of land at LAUS with 5.9 million square feet of entitlements that would allow for Metro to build on the property and draw lease revenues from both transit operators and businesses (Metro 2015b). The LAUS Master Plan identified the SCRIP as one of five related projects and included other development strategies for the area within and surrounding the LAUS campus.
- **LAUS capacity needs** – Service operators identified a need to increase the capacity of the rail yard by up to 300 percent while further enhancing operational flexibility with a northern loop track south of LAUS.
- **LAUS forecast passenger demand** – Metro determined the existing 28-foot-wide pedestrian passageway connecting the east and west ends of LAUS would be unable to meet forecast passenger demand on existing and planned modes of transportation that were projected at the time to result in over 200,000 passenger trips through LAUS each weekday by 2040 (Metro 2015b) and began evaluating concepts for a new passenger concourse.

As a result of these area-wide planning changes, Metro initiated work on the SCRIP concurrent with the development of the LAUS Master Plan to identify new run-through track alternatives in conjunction with a new at-grade passenger concourse at LAUS (below the rail yard), an elevated rail yard, and a northern loop track.

Under the SCRIP, Metro initiated the planning and design of a new passenger concourse below an elevated rail yard, with up to 10 new run-through tracks south of LAUS to meet current building code standards while implementing long-term rail, transit, and mobility improvements at LAUS. Initially in 2005, LAUS was identified as a potential station location in the Tier 1 documents associated with the planned HSR system (CHSRA and FRA 2005). The planned HSR system was not considered as part of the SCRIP because Metro and CHSRA had yet to enter into an agreement to accommodate the planned HSR system through the Project limits.

2.3 Link Union Station Project

In 2016, Metro rebranded the SCRIP as the Link US Project. Through the alternatives analysis process conducted for the Burbank to Los Angeles and Los Angeles to Anaheim Project Sections of the planned HSR system, LAUS became the preferred station location for the planned HSR system in Downtown Los Angeles (CHSRA 2021). For this reason, Metro and CHSRA also

entered into an agreement to complete the necessary Project-level environmental analysis and preliminary engineering to accommodate the planned HSR system as part of the Link US Project.

The run-through tracks, from LAUS over US-101 to the main line tracks, have been considered since 2002 as part of the Run-Through Tracks Project and remain the fundamental component to improving operational efficiency, capacity, flexibility, reliability, and connectivity for trains using LAUS. However, the Link US Project would address new considerations that were not applicable in the Run-Through Tracks Project EIS/EIR. These new considerations include the accommodation of the planned HSR system, changes in area conditions since consideration of the SCRIP, commitments from funding partners, certification of the Link US Project Final EIR, and certification of the Final EIR and issuance of a Final EIS and Record of Decision for CHSRA's Burbank to Los Angeles Project Section of the planned HSR system. New considerations that led to evolutions of the major components associated with the Project include the following:

- Coordination between Metro and stakeholders to consider options for an above-grade passenger concourse or expansion of the existing pedestrian passageway at LAUS
- Coordination between Metro and funding partners (California State Transportation Agency, Southern California Regional Rail Authority, CHSRA) to implement common rail infrastructure through the Project limits that would be designed to facilitate run-through service for multiple rail service providers (Metrolink, Los Angeles–San Diego–San Luis Obispo, Amtrak, CHSRA) from LAUS to the main line tracks on the west bank of the Los Angeles River
- Other planned, and reasonably foreseeable Metro and public projects that pose design/compatibility constraints and/or multimodal opportunities, including, but not limited to:
  - Metro LAUS Forecourt and Esplanade Improvements Project
  - Metro West Santa Ana Branch Line Project
  - Metro *Connect US Action Plan* (Metro 2015c) and Eastside Access Improvements
  - Metro Emergency Security Operations Center Project
  - Metro Division 20 Portal Widening and Turnback Facility Project
  - Metro Los Angeles River Path Project

Common Rail Infrastructure

Tracks, platforms, bridges, embankments, and associated civil/railroad infrastructure that would accommodate both regional/intercity rail trains and high-speed rail trains.

As part of the Project, the following common rail infrastructure is environmentally evaluated in this EIS:

- North of LAUS - Shared lead tracks (compatible tracks), and the new Vignes Street Bridge and new Cesar Chavez Avenue Bridge are considered common rail infrastructure.
- At LAUS, Platforms 2 and 3, tracks, and concourse related improvements to support HSR operations are considered common rail infrastructure.
- South of LAUS, bridges, tracks, and embankments (extending from LAUS to First Street constructed wide enough to support run-through tracks for both regional intercity rail and HSR use and catenaries) are considered common rail infrastructure.

  - Metro Alameda Street Mobility Project
  - CHSRA Burbank to Los Angeles and Los Angeles to Anaheim Project Sections of the planned HSR system
- Property ownership and valuation changes
- Land use changes within the Project study area
- New and/or updated Southern California Regional Rail Authority, American Railway Engineering and Maintenance-of-Way Association, Metro, CHSRA, California Public Utilities Commission, FRA, and the City of Los Angeles building and safety standards, regulations, and discretionary action requirements

(THIS PAGE INTENTIONALLY LEFT BLANK)

3.0 Public and Agency Outreach and Feedback

A public outreach plan was prepared to identify the target audiences, key messaging, outreach tools, and methods to collect feedback. Metro, as the local Project sponsor and joint lead agency, began the public engagement process in 2015 with the FRA during preparation of the Link US Project joint EIS/EIR. This process was intended to gather stakeholder feedback for incorporation into the alternatives analysis process and the environmental document. Public and agency feedback was obtained through a variety of formal and informal methods.

During the CEQA process, public and agency feedback was provided to Metro, specifically on the track alignments and concourse concepts considered in this memorandum. Feedback received during this process included numerous reoccurring comments on the same or similar general topics. These key issue areas included comments related to:

- Passenger Transfer Times
- Passenger Circulation and Accessibility Enhancements
- Above-Grade Passenger Concourse Design
- Soil Contamination and Hazardous Waste/Materials
- Preservation of Historic Resources at Los Angeles Union Station (LAUS)
- Track Elevation Slope Safety and Runaway Trains
- Little Tokyo Community Concerns
- Public Art and Cultural Enhancement Programs
- Adjacent Parallel Tunnels

As discussed in Table ES-1, public and agency feedback received during the EIR process resulted in refinements to one track alignment, and one passenger concourse concept. Public and agency feedback continued after Metro's certification of the Final EIR, as CHSRA and Metro prepared the standalone NEPA EIS and during the second scoping process for the Revised NOI. Public and agency outreach will continue throughout the environmental process, as well as during the subsequent design and construction phases.

(THIS PAGE INTENTIONALLY LEFT BLANK)

4.0 Range of Track Alignments and Concourse Concepts Considered

4.1 Track Alignment Alternatives

Throughout Project development, Metro considered a reasonable range of track alignment alternatives with variations to the proposed infrastructure throughout the Project limits. Table 4-1 and Attachment A describes the key characteristics of the 14 track alignment alternatives considered during the screening process. As demonstrated in Table 4-1, there are some similarities between the range of alternatives considered related to the following:

1. Lead tracks north of LAUS – Of the 14 track alignment alternatives considered, 9 include a dedicated lead track alignment north of LAUS (Alternatives 1 through 5, 7, 8, 10 and 13), and 4 include a shared lead track alignment north of LAUS (Alternatives 6, 9, 12, and 14).
2. Run-through tracks south of LAUS – Of the 14 track alignment alternatives considered, 13 include shared lead tracks for BNSF freight trains and Amtrak intercity trains at the BNSF West Bank Yard (Alternatives 1 through 13), and 3 include permanent removal of BNSF storage tracks at the BNSF West Bank Yard (Alternatives 12, 13, and 14). Of the 14 track alignment alternatives considered, 12 alternatives include a loop track alignment.

Lead Tracks

Provides entrance and exit for trains into and out of the Los Angeles Union Station rail yard

Dedicated Lead Track Alignment North of LAUS

An alignment north of Los Angeles Union Station with seven total lead tracks; five lead tracks for regional/ intercity rail trains and two lead tracks that would encroach outside of the existing right-of-way for high-speed rail trains

Shared Lead Track Alignment North of LAUS

An alignment north of Los Angeles Union Station with six total lead tracks; two of which could be shared with high-speed rail trains

Loop Track

A run-through track that would provide a circular route or “loop” around Los Angeles Union Station to provide even greater operational flexibility with enhanced schedule reliability and capacity at Los Angeles Union Station

(THIS PAGE INTENTIONALLY LEFT BLANK)

Table 4-1. Track Alignment Alternatives Considered

Track Alignment Alternative	Description	Total Number of Run-Through Tracks
1	4 Regional/Intercity Rail Run-Through Tracks + 2 HSR Run-Through Tracks The track alignment includes seven lead tracks north of LAUS (two dedicated tracks for HSR trains outside existing railroad ROW); removal of the Garden Tracks; permanent realignment of the Gold Line north of LAUS; five platforms for regional/intercity rail trains, one platform for HSR trains, and one platform for the Gold Line LRT; a common bridge over the El Monte Busway and US-101; a common embankment south of Commercial Street extending to Center Street; lowering the intersection of Center Street and Commercial Street; two separate bridges over Center Street and the Amtrak lead track; two separate rail embankments on the west bank of the Los Angeles River with lowering and reconstruction of storage tracks at the BNSF West Bank Yard; shared lead tracks for BNSF and Amtrak trains at the BNSF West Bank Yard; four regional/intercity rail run-through tracks (with a single loop track); and accommodation for two HSR run-through tracks from LAUS to First Street.	6
2	4 Regional/Intercity Rail Run-Through Tracks + 4 HSR Run-Through Tracks The track alignment includes seven lead tracks north of LAUS (two dedicated tracks for HSR trains outside existing railroad ROW); removal of the Garden Tracks; permanent realignment of the Gold Line north of LAUS; four platforms for regional/intercity rail trains, two platforms for HSR trains, and one platform for the Gold Line LRT; a common bridge over the El Monte Busway and US-101; a common embankment south of Commercial Street extending to Center Street; lowering the intersection of Center Street and Commercial Street; two separate bridges over Center Street and the Amtrak lead track; two separate rail embankments on the west bank of the Los Angeles River with lowering and reconstruction of storage tracks at the BNSF West Bank Yard; shared lead tracks for BNSF and Amtrak trains at the BNSF West Bank Yard; four regional/intercity rail run-through tracks (with a single loop track); and accommodation for four HSR run-through tracks from LAUS to First Street.	8
3	5 Regional/Intercity Rail Run-Through Tracks + 2 HSR Run-Through Tracks The track alignment includes seven lead tracks north of LAUS (two dedicated tracks for HSR trains outside existing railroad ROW); removal of the Garden Tracks; permanent realignment of the Gold Line north of LAUS; five platforms for regional/intercity rail trains, one platform for HSR trains, and one platform for the Gold Line LRT; a common bridge over the El Monte Busway and US-101; a common embankment south of Commercial Street extending to Center Street; lowering the intersection of Center Street and Commercial Street; two separate bridges over Center Street and the Amtrak lead track; two separate rail embankments on the west bank of the Los Angeles River with lowering and reconstruction of storage tracks at the BNSF West Bank Yard; shared	7

Table 4-1. Track Alignment Alternatives Considered

Track Alignment Alternative	Description	Total Number of Run-Through Tracks
	lead tracks for BNSF and Amtrak trains at the BNSF West Bank Yard; five regional/intercity rail run-through tracks (with a single loop track); and accommodation for two HSR run-through tracks from LAUS to First Street.	
4	5 Regional/Intercity Rail Run-Through Tracks + 4 HSR Run-Through Tracks The track alignment includes seven lead tracks north of LAUS (two dedicated tracks for HSR trains outside existing railroad ROW); removal of the Garden Tracks; permanent realignment of the Gold Line north of LAUS; four platforms for regional/intercity rail trains; two platforms for HSR trains, and one platform for the Gold Line LRT; a common bridge over the El Monte Busway and US-101; a common embankment south of Commercial Street extending to Center Street; lowering the intersection of Center Street and Commercial Street; two separate bridges over Center Street and the Amtrak lead track; two separate rail embankments on the west bank of the Los Angeles River with lowering and reconstruction of storage tracks at the BNSF West Bank Yard; shared lead tracks for BNSF and Amtrak trains at the BNSF West Bank Yard; five regional/intercity rail run-through tracks (with a single loop track); and accommodation for four HSR run-through tracks from LAUS to First Street.	9
5	6 Regional/Intercity Rail Run-Through Tracks + 2 HSR Run-Through Tracks (with dedicated lead tracks north of LAUS) The track alignment includes seven lead tracks north of LAUS (two dedicated tracks for HSR trains outside existing railroad ROW); removal of the Garden Tracks; permanent realignment of the Gold Line north of LAUS; five platforms for regional/intercity rail trains, one platform for HSR trains, and one platform for the Gold Line LRT; a common bridge over the El Monte Busway and US-101; a common embankment south of Commercial Street extending to Center Street; lowering the intersection of Center Street and Commercial Street; two separate bridges over Center Street and the Amtrak lead track; two separate rail embankments on the west bank of the Los Angeles River with lowering and reconstruction of storage tracks at the BNSF West Bank Yard; shared lead tracks for BNSF and Amtrak trains at the BNSF West Bank Yard; six regional/intercity rail run-through tracks (with a single loop track); and accommodation for two HSR run-through tracks from LAUS to First Street.	8
6	6 Regional/Intercity Rail Run-Through Tracks + 2 HSR Run-Through Tracks (with shared lead tracks north of LAUS) The track alignment includes six lead tracks north of LAUS (two shared tracks for regional/intercity rail trains and HSR trains); removal of the Garden Tracks, four platforms for regional/intercity rail trains, one platform for HSR trains, and one platform for the Gold Line LRT; a common bridge over the El Monte Busway and US-101; a common embankment where Commercial Street currently exists, extending to Center Street; lowering the	8

Table 4-1. Track Alignment Alternatives Considered

Track Alignment Alternative	Description	Total Number of Run-Through Tracks
	intersection of Center Street and Commercial Street; realignment of Commercial Street; two separate bridges over Center Street and the Amtrak lead track; two separate rail embankments on the west bank of the Los Angeles River with lowering and reconstruction of storage tracks at the BNSF West Bank Yard; shared lead tracks for BNSF and Amtrak trains at the BNSF West Bank Yard; six regional/intercity rail run-through tracks and (with a single loop track); and accommodation for two HSR run-through tracks from LAUS to First Street.	
7	6 Regional/Intercity Rail Run-Through Tracks + 4 HSR Run-Through Tracks (with dedicated lead tracks north of LAUS) The track alignment includes seven lead tracks north of LAUS (two dedicated tracks for HSR trains outside existing railroad ROW); removal of the Garden Tracks; permanent realignment of the Gold Line north of LAUS; four platforms for regional/intercity rail trains, two platforms for HSR trains, and one platform for the Gold Line LRT; a common bridge over the El Monte Busway and US-101; a common embankment south of Commercial Street extending to Center Street; lowering the intersection of Center Street and Commercial Street; two separate bridges over Center Street and the Amtrak lead track; two separate rail embankments on the west bank of the Los Angeles River with lowering and reconstruction of storage tracks at the BNSF West Bank Yard; shared lead tracks for BNSF and Amtrak trains at the BNSF West Bank Yard; six regional/intercity rail run-through tracks (with a single loop track); and accommodation for four HSR run-through tracks from LAUS to First Street.	10
8	6 Regional/Intercity Rail Run-Through Tracks + 4 HSR Run-Through Tracks (with double loop tracks) The track alignment includes seven lead tracks north of LAUS (two dedicated tracks for HSR trains outside existing railroad ROW); removal of the Garden Tracks; permanent realignment of the Gold Line north of LAUS; four platforms for regional/intercity rail trains, two platforms for HSR trains, and one platform for the Gold Line LRT; a common bridge over the El Monte Busway and US-101; a common embankment south of Commercial Street extending to Center Street; lowering the intersection of Center Street and Commercial Street; two separate bridges over Center Street and the Amtrak lead track; two separate rail embankments on the west bank of the Los Angeles River with lowering and reconstruction of storage tracks at the BNSF West Bank Yard; shared lead tracks for BNSF and Amtrak trains at the BNSF West Bank Yard; six regional/intercity rail run-through tracks (with two loop tracks); and accommodation for four HSR run-through tracks from LAUS to First Street.	10
9	6 Regional/Intercity Rail Run-Through Tracks + 4 HSR Run-Through Tracks (with shared lead tracks north of LAUS)	10

Table 4-1. Track Alignment Alternatives Considered

Track Alignment Alternative	Description	Total Number of Run-Through Tracks
	The track alignment includes six lead tracks north of LAUS (two shared tracks for regional/intercity rail trains and HSR trains); removal of the Garden Tracks; four platforms for regional/intercity rail trains; two platforms for HSR trains, and one platform for the Gold Line LRT; a common bridge over the El Monte Busway and US-101; a common embankment where Commercial Street currently exists extending to Center Street; lowering the intersection of Center Street and Commercial Street; realignment of Commercial Street; two separate bridges over Center Street and the Amtrak lead track; two separate rail embankments on the west bank of the Los Angeles River with lowering and reconstruction of storage tracks at the BNSF West Bank Yard; shared lead tracks for BNSF and Amtrak trains at the BNSF West Bank Yard; six regional/intercity rail run-through tracks (with a single loop track); and accommodation for four HSR run-through tracks from LAUS to First Street.	
10	6 Regional/Intercity Rail Run-Through Tracks + 2 HSR Run-Through Tracks (with HSR double decked) The track alignment includes seven lead tracks north of LAUS (two dedicated tracks for HSR trains outside existing railroad ROW); removal of the Garden Tracks; four platforms for regional/intercity rail trains, one platform for HSR trains above the existing platform for the Gold Line LRT; two separate bridges over the El Monte Busway and US-101; two separate overhead viaducts over and south of Commercial Street; lowering the intersection of Center Street and Commercial Street; two separate bridges over Center Street and the Amtrak lead track; two separate rail embankments on the west bank of the Los Angeles River with lowering and reconstruction of storage tracks at the BNSF West Bank Yard; shared lead tracks for BNSF and Amtrak trains at the BNSF West Bank Yard; six regional/intercity rail run-through tracks (with a single loop track); and accommodation for two HSR run-through tracks from LAUS to First Street.	8
11	6 Regional/Intercity Rail Run-Through Tracks + 4 HSR Run-Through Tracks (with permanent realignment of Gold Line due to addition of eighth platform) The track alignment includes six lead tracks north of LAUS (two dedicated tracks for HSR trains outside existing railroad ROW); removal of the Garden Tracks; permanent realignment of the Gold Line north and south of LAUS; modification to the existing Gold Line viaduct over US-101; five platforms for regional/intercity rail trains, two platforms for HSR trains, and one platform for the Gold Line LRT; two separate bridges over the El Monte Busway and US-101; two separate overhead viaducts over and south of Commercial Street; lowering the intersection of Center Street and Commercial Street; two separate bridges over Center Street and the Amtrak lead track; two separate rail embankments on the west bank of the Los Angeles River with lowering and reconstruction of storage tracks at the BNSF West Bank Yard; shared lead tracks for BNSF and Amtrak trains at	10

Table 4-1. Track Alignment Alternatives Considered

Track Alignment Alternative	Description	Total Number of Run-Through Tracks
	the BNSF West Bank Yard; six regional/intercity rail run-through tracks (with a single loop track); and accommodation for four HSR run-through tracks from LAUS to First Street.	
12	6 Regional/Intercity Rail Run-Through Tracks + 4 HSR Run-Through Tracks (with shared lead tracks north of LAUS, no loop track, and shared lead tracks for BNSF freight trains and Amtrak trains) The track alignment includes six lead tracks north of LAUS (two shared tracks for regional/intercity rail trains and HSR trains); removal of the Garden Tracks; four platforms for regional/intercity rail trains, two platforms for HSR trains, and one platform for the Gold Line LRT; a common bridge over the El Monte Busway and US-101; a common embankment north of Commercial Street extending to Center Street; a common bridge over Center Street; a common embankment east of Center Street and common bridge over the Amtrak lead track; a common embankment on the west bank of the Los Angeles River extending to the 1st Street Bridge; permanent removal of 5,565 feet of BNSF storage tracks at the north end of the West Bank Yard; shared lead tracks for BNSF and Amtrak trains at the BNSF West Bank Yard; six regional/intercity rail run-through tracks (no loop track); and accommodation for four HSR run-through tracks from LAUS to First Street. No lowering of Center Street or realignment of Commercial Street is required. BNSF storage tracks would not be reconstructed resulting in a permanent loss of storage track capacity at the BNSF West Bank Yard.	10
13	6 Regional/Intercity Rail Run-Through Tracks + 4 HSR Run-Through Tracks (with dedicated lead tracks north of LAUS, loop track, and shared lead tracks for BNSF freight trains and Amtrak trains) The track alignment includes seven lead tracks north of LAUS (two dedicated tracks for HSR trains outside existing railroad ROW); removal of the Garden Tracks; four platforms for regional/intercity rail trains, two platforms for HSR trains, and one platform for the Gold Line LRT; a common bridge over the El Monte Busway and US-101; a common embankment where Commercial Street currently exists extending to Center Street; lowering the intersection of Center Street and Commercial Street; realignment of Commercial Street; separate bridges over Center Street for regional/intercity trains and HSR trains; an embankment for regional/intercity rail trains and separate viaduct for HSR trains east of Center Street; a common bridge over the Amtrak lead track; a common embankment on the west bank of the Los Angeles River extending to the 1st Street Bridge; permanent removal of 5,565 feet of BNSF storage tracks at the north end of the West Bank Yard; shared lead tracks for BNSF and Amtrak trains at the BNSF West Bank Yard; six regional/intercity rail run-through tracks (with a single loop track); and accommodation for four HSR run-through tracks from LAUS to First Street. Similar to Alternative 12, BNSF storage tracks would not be reconstructed resulting in a permanent loss of storage track capacity at the BNSF West Bank Yard.	10

Table 4-1. Track Alignment Alternatives Considered

Track Alignment Alternative	Description	Total Number of Run-Through Tracks
14	6 Regional/Intercity Rail Run-Through Tracks + 4 HSR Run-Through Tracks (with shared lead tracks north of LAUS, no loop track, and dedicated lead tracks for BNSF freight trains and Amtrak trains) The track alignment includes six lead tracks north of LAUS (two shared tracks for regional/intercity rail trains and HSR trains); removal of the Garden Tracks; four platforms for regional/intercity rail trains, two platforms for HSR trains, and one platform for the Gold Line LRT; a common bridge over the El Monte Busway and US-101; a common embankment north of Commercial Street extending to Center Street; a common bridge over Center Street; common embankments and/or bridges east of Center Street; a common bridge over the Amtrak lead track; a common embankment on the west bank of the Los Angeles River extending to the 1st Street Bridge; permanent removal of 5,500 feet of BNSF storage tracks at the north end of the West Bank Yard; dedicated lead tracks for BNSF and Amtrak trains at the BNSF West Bank Yard; six regional/intercity rail run-through tracks (no loop track); and accommodation for four HSR run-through tracks from LAUS to First Street. No lowering of Center Street or realignment of Commercial Street is required. Similar to Alternatives 12 and 13, BNSF storage tracks would not be reconstructed resulting in a permanent loss of storage track capacity at the BNSF West Bank Yard.	10

4.2 Passenger Concourse Concepts

The six passenger concourse concepts presented in Table 4-2 and depicted in Attachment B were considered during the screening process.

Table 4-2. Passenger Concourse Concepts Considered

Concourse Concepts	Description
Concourse Concept 1 (Maintain Passageway Concourse)	This concept would preserve the existing pedestrian passageway by maintaining the existing passageway, its utilities, and structure. Passenger loading platforms would be accessible via stairs and ramps, similar to existing conditions. Ramps servicing the platforms would be reconstructed to accommodate the vertical rise of the new top of rail and would be nearly 300 feet in length. The existing entrance and exit portals along the pedestrian passageway walls would be relocated to support the widened platforms, and the pedestrian passageway ceiling would also need to be reconstructed.
Concourse Concept 2 (Widened Passageway Concourse)	This concept would widen the existing pedestrian passageway to a width of approximately 90 feet. The floor elevation would remain unchanged from the existing passageway. The widened passageway would be limited to passenger circulation and would not allow for station amenities, such as restrooms, waiting areas, information kiosks, retail space, or enhanced baggage handling services. The concept would require demolition of the existing north and south ramps and stairs and would eliminate the historic pedestrian passageway walls to allow access to a wider passageway area.
Concourse Concept 3 (At-Grade Concourse)	This concept would result in a new passenger concourse below the tracks with a minimum head clearance of 10 feet, 6 inches. This concept would require the temporary relocation of the Gold Line with a temporary platform while Platform 1 is raised, widened, and lengthened. For this concept, a structural system of girders would support the Gold Line platform and rail to create a wider, more open concourse space below. The installation of girders would require the Gold Line Platform 1 and Tracks 1 and 2 to be replaced in their entirety. In addition, the depth of proposed concrete girders requires the Gold Line Platform 1 be elevated to achieve a more desirable concourse height. The addition of East and West Plazas would provide opportunities for new open spaces and terraces. It would include additional space for transit amenities such as waiting areas, restrooms, retail areas, and other ancillary support functions.
Concourse Concept 4 (Above-Grade Concourse)	This concept would include an elevated component roughly 90 feet above the grade of the existing passageway. The above-grade concourse would span over the platforms and offer transit amenities such as waiting areas, lounges, and retail space while also meeting the egress capacity needs for the projected ridership growth. The concept would allow for high ceilings and maximize panoramic views of Downtown Los Angeles. The existing pedestrian passageway would be demolished. The addition of East and West Plazas would provide opportunities for new open spaces and terraces. It would include additional space for transit amenities such as waiting areas, restrooms, retail areas, and other ancillary support functions.

Table 4-2. Passenger Concourse Concepts Considered

Concourse Concepts	Description
Concourse Concept 5 (Above-Grade Concourse with New Expanded Passageway)	This concept would include an elevated structure roughly 90 feet above the grade of the existing passageway. The elevated portion would span over the platforms and offer transit amenities such as waiting areas, lounges, and retail space while also meeting the egress capacity needs for the projected ridership growth. The concept would allow for high ceilings and maximize panoramic views of Downtown Los Angeles. Additionally, it also includes a 120-foot-wide expanded passageway below the rail yard that would be four times the width of the existing pedestrian passageway. The addition of East and West Plazas would provide opportunities for new open spaces and terraces. It would include additional space for transit amenities such as waiting areas, restrooms, retail areas, and other ancillary support functions.
Concourse Concept 6 (Expanded Passageway)	This concept would include widening of the existing 28-foot-wide pedestrian passageway to a 140-foot-wide passageway below the rail yard to provide safe and accessible circulation through LAUS with modern passenger accommodations. New VCEs (stairs, escalators, and elevators) would provide connectivity from the expanded passageway that is at grade and below the rail yard to the passenger platforms above. The addition of East and West Plazas would provide opportunities for new open spaces and terraces. It would include additional space for transit amenities such as waiting areas, restrooms, retail areas, and other ancillary support functions.

Notes:
LAUS=Los Angeles Union Station; VCE=vertical circulation element

5.0 Track Alignment Alternatives

5.1 Screening Criteria

As part of this alternative analysis, six screening criteria were considered and applied to the range of 14 track alignment alternatives. Any track alignment alternative that did not meet all the six screening criteria was rejected from further consideration. The application of each screening criterion and how each alignment alternative was evaluated in light of that criterion is described below.

5.1.1 Criterion 1 – Accommodate 10 Run-Through Tracks over US-101

Track alignment alternatives that do not accommodate six run-through tracks for regional/intercity trains and four run-through tracks for HSR trains (10 run-through tracks total) from LAUS to the west bank of the Los Angeles River were rejected from further consideration.

Track alignment alternatives that do not accommodate 10 run-through tracks south of LAUS would constrain and limit flexibility to achieve the increases in train movements and associated passenger volumes forecasted by existing (SCRRA, Amtrak, LOSSAN) and future (CHSRA) operators at LAUS. Although actual operational scenarios and service levels at LAUS are dependent on future service plans, negotiations between the service operators, and available operating funding, track alignment alternatives must provide the largest possible operating envelope for run-through tracks on the structures and embankments south of LAUS to provide rail operators maximum flexibility to implement the vision of multiple statewide and regional planning documents, including the California Transportation Plan 2050 (Caltrans 2021), 2020 RTP/SCS: Connect SoCal (SCAG 2020), and the 2018 California State Rail Plan: Connecting California (Caltrans 2018), that provide for increased operational frequency for regional and intercity trains and introduction of the planned HSR system in Southern California by 2040.

5.1.2 Criterion 2 – Avoid Shared Lead Tracks for Freight Trains and Intercity Trains at BNSF West Bank Yard

Track alignment alternatives that require BNSF freight trains to share the same tracks as Amtrak trains at the BNSF West Bank Yard were rejected from further consideration as it would require daily coordination of train movements not required under the existing condition. The coordination required between BNSF and Amtrak would impact scheduling and could result in potential impacts on intermodal freight operations as well as Amtrak on time performance to and from LAUS.

5.1.3 Criterion 3 – Avoid Lowering the Existing Red and Purple Line Subway

Track alignment alternatives that require lowering of the existing Red and Purple Line subway were rejected from further consideration. Due to the high volume of passengers on the Red and Purple Line subway, any modifications to the existing Red and Purple Line subway requiring transit service disruption over several years could severely hinder the ability of LAUS to continue operating at an acceptable level of service. Additionally, lowering the existing Red and Purple Line subway is not required to fulfill the Project purpose and need, and would result in substantially higher construction costs that could exceed allocated public funds.

5.1.4 Criterion 4 – Avoid Lowering the United States Highway 101 and the El Monte Busway

Track alignment alternatives that require lowering of US-101 and the El Monte Busway were rejected from further consideration. The run-through tracks must be able to vertically clear US-101 and the El Monte Busway. Lowering US-101 was determined impractical by Caltrans and Metro due to design criteria requirements and substantially higher construction costs of proposed modifications to US-101 and the El Monte Busway infrastructure. To accommodate Caltrans and Metrolink vertical clearance requirements for railroad bridges over roadways, run-through tracks must be designed to extend above these facilities at least 16' 6". Furthermore, all vertical grade requirements must be met since regional/intercity rail trains and HSR trains are planned to run alongside one another, and both are designed to a maximum 2.8 percent compensated for grade. This also must maintain the ability for run-through tracks to connect with main line tracks on the the west bank of the Los Angeles River. In addition, lowering US-101 and the El Monte Busway would result in multiple years of traffic and transit service disruptions during construction.

5.1.5 Criterion 5 – Avoid Stacking Platforms for Regional/Intercity Rail Trains and High-Speed Rail Trains

Track alignment alternatives that involve vertically stacking platforms for regional/intercity rail trains and HSR trains were rejected from further consideration. Specifically, stacking scenarios would create vertical grades along the run-through track alignment that would exceed allowable design criteria (the maximum vertical grade permissible of 2.8 percent compensated) in order to connect to the other tracks.

5.1.6 Criterion 6 – Avoid Adding an Eighth Platform for Regional/Intercity Rail Trains or High-Speed Rail Trains

Track alignment alternatives requiring expansion of the LAUS rail yard to add an eighth platform adjacent to the existing seven active platforms were rejected from further consideration. A new eighth platform would result in additional ROW impacts, and multiple years of transit service disruptions during construction that would affect a high volume of passengers. Expansion of the

existing LAUS rail yard with an eighth platform for regional/intercity or HSR service was rejected from further consideration because the Gold Line would have to be realigned north and south of LAUS thereby resulting in additional acquisitions on nearby properties, such as the United States Post Office Los Angeles Terminal Annex property and the Mozaic Apartments property.

5.2 Track Alignment Alternatives Screening Results

Each of the 14 track alignment alternatives was screened based on the six criteria discussed in Section 5.1. Of the alternatives considered, 13 track alignment alternatives did not meet all screening criteria and were therefore rejected from further consideration. Table 5-1 through Table 5-5 provides details of the screening criteria results for each track alignment alternative considered. Where appropriate, track alignment alternatives that have the same screening criteria conclusions, were grouped into one table to avoid redundant analysis.

5.2.1 Track Alignment Alternatives 1 through 6

As identified in Table 5-1, Track Alignment Alternatives 1 through 6 (all with less than 10 run-through tracks south of LAUS and shared lead tracks for BNSF freight trains and Amtrak trains at the BNSF West Bank Yard) meet four out of the six screening criteria. Track Alignment Alternatives 1 through 6 were rejected from further consideration because these track alignment alternatives do not meet Criteria 1 or 2.

Table 5-1. Track Alignment Alternatives 1 - 5 Screening Criteria Analysis

Screening Criteria	Meets Screening Criteria?
Criterion 1 – Accommodate 10 Run-Through Tracks over US-101	**No**. Track Alignment Alternatives 1 through 6 would not accommodate 10 run-through tracks for regional/intercity rail trains and HSR trains.
Criterion 2 – Avoid Shared Lead Tracks for Freight Trains and Intercity Trains at BNSF West Bank Yard	**No**. Track Alignment Alternatives 1 through 6 would require BNSF freight trains and Amtrak intercity trains to share the same lead track to access their facilities in the vicinity of the BNSF West Bank Yard, respectively.
Criteria 3– Avoid Lowering the Existing Red and Purple Line Subway	**Yes**. Track Alignment Alternatives 1 through 6 would not require the lowering of the existing Red and Purple Line Subway.
Criteria 4 – Avoid Lowering the US-101 and the El Monte Busway	**Yes.** Track Alignment Alternatives 1 through 6 would not require the lowering of US-101 and the El Monte Busway.

Table 5-1. Track Alignment Alternatives 1 - 5 Screening Criteria Analysis	
Screening Criteria	**Meets Screening Criteria?**
Criteria 5 – Avoid Stacking Platforms for Regional/Intercity Rail Trains HSR Trains	**Yes.** Track Alignment Alternatives 1 through 6 would not include vertically stacked platforms for regional/intercity rail trains and HSR trains.
Criteria 6 – Avoid Adding an Eighth Platform for Regional/Intercity Rail Trains or HSR Trains	**Yes.** Track Alignment Alternatives 1 through 6 would not include an eighth platform at the LAUS rail yard to accommodate regional/intercity rail or HSR trains.

Notes:
HSR=high-speed rail; LAUS=Los Angeles Union Station; Link US=Link Union Station; US-101=United States Highway 101

5.2.2 Track Alignment Alternative 7 through 9, 12, and 13

As identified in Table 5-2, Track Alignment Alternatives 7 through 9, 12, and 13 meet five out of the six screening criteria. Track Alignment Alternatives 7 through 9, 12, and 13 were rejected from further consideration because they do not meet Criteria 2.

Table 5-2. Track Alignment Alternatives 7 through 9, 12, and 13 Screening Criteria Analysis	
Screening Criteria	**Meets Screening Criteria?**
Criterion 1 – Accommodate 10 Run-Through Tracks over US-101	**Yes**. Track Alignment Alternatives 7 through 9, 12, and 13 would accommodate 10 run-through tracks for regional/intercity rail trains and HSR trains.
Criterion 2 – Avoid Shared Lead Tracks for Freight Trains and Intercity Trains at BNSF West Bank Yard	**No**. Track Alignment Alternatives 7 through 9, 12, and 13 would require BNSF freight trains and Amtrak intercity trains to share the same lead track to access their facilities in the vicinity of the BNSF West Bank Yard, respectively.
Criteria 3 – Avoid Lowering the Existing Red and Purple Line Subway	**Yes**. Track Alignment Alternatives 7 through 9, 12, and 13 would not require the lowering of the existing Red and Purple Line Subway.
Criteria 4 – Avoid Lowering the US-101 and the El Monte Busway	**Yes.** Track Alignment Alternatives 7 through 9, 12, and 13 would not require the lowering of US-101 and the El Monte Busway.

Table 5-2. Track Alignment Alternatives 7 through 9, 12, and 13 Screening Criteria Analysis	
Screening Criteria	**Meets Screening Criteria?**
Criteria 5 – Avoid Stacking Platforms for Regional/Intercity Rail Trains and HSR Trains	**Yes.** Track Alignment Alternatives 7 through 9, 12, and 13 would not include vertically stacked platforms for regional/intercity rail trains and HSR trains.
Criteria 6 – Avoid Adding an Eighth Platform for Regional/Intercity Rail Trains or HSR Trains	**Yes.** Track Alignment Alternatives 7 through 9, 12, and 13 would not include an eighth platform at the LAUS rail yard to accommodate regional/intercity rail trains or HSR trains.

Notes:
HSR=high-speed rail; LAUS=Los Angeles Union Station; Link US=Link Union Station; US-101=United States Highway 101

5.2.3 Track Alignment Alternative 10

As identified in Table 5-3, Track Alignment Alternative 10 (6 Regional/Intercity Rail Run-Through Tracks + 2 HSR Run-Through Tracks with HSR double decked)) meets three out of the six screening criteria. Track Alignment Alternative 10 was rejected from further consideration because it does not meet Criteria 1, 2, or 4.

Table 5-3. Track Alignment Alternative 10 Screening Criteria Analysis	
Screening Criteria	**Meets Screening Criteria?**
Criterion 1 – Accommodate 10 Run-Through Tracks over US-101	**No**. Track Alignment Alternative 10 would not accommodate 10 run-through tracks for both regional/intercity rail trains and HSR trains.
Criterion 2 – Avoid Shared Lead Tracks for Freight Trains and Intercity Trains at BNSF West Bank Yard	**No**. Track Alignment Alternative 10 would require BNSF freight trains and Amtrak intercity trains to share the same lead track to access their facilities in the vicinity of the BNSF West Bank Yard, respectively.
Criteria 3 – Avoid Lowering the Existing Red and Purple Line Subway	**Yes**. Track Alignment Alternative 10 would not require the lowering of the existing Red and Purple Line Subway.
Criteria 4 – Avoid Lowering the US-101 and the El Monte Busway	**Yes.** Track Alignment Alternative 10 would not require the lowering of US-101 and the El Monte Busway.

Table 5-3. Track Alignment Alternative 10 Screening Criteria Analysis	
Screening Criteria	**Meets Screening Criteria?**
Criteria 5 – Avoid Stacking Platforms for Regional/Intercity Rail Trains and HSR Trains	**No.** Track Alignment Alternative 10 would include vertically stacking platforms for regional/intercity rail trains and HSR trains. The stacking design creates vertical grades along the run-through track alignment that would exceed allowable design criteria (maximum 2.8 percent compensated) to connect to the other tracks.
Criteria 6 – Avoid Adding an Eighth Platform for Regional/Intercity Rail Trains or HSR Trains	**Yes.** Track Alignment Alternative 10 would not include an eighth platform at the LAUS rail yard to accommodate regional/intercity rail trains or HSR trains.

Notes:
HSR=high-speed rail; LAUS=Los Angeles Union Station; Link US=Link Union Station; US-101=United States Highway 101

5.2.4 Track Alignment Alternative 11

As identified in Table 5-4, Track Alignment Alternative 11 (6 Regional/Intercity Rail Run-Through Tracks + 4 HSR Run-Through Tracks with permanent realignment of Gold Line due to addition of eighth platform) meets four out of the six screening criteria. Track Alignment Alternative 11 was rejected from further consideration because it does not meet Criteria 2 and Criteria 6.

Table 5-4. Track Alignment Alternative 11 Screening Criteria Analysis	
Screening Criteria	**Meets Screening Criteria?**
Criterion 1 – Accommodate 10 Run-Through Tracks over US-101	**Yes**. Track Alignment Alternative 11 would accommodate 10 run-through tracks for regional/intercity rail trains and HSR trains.
Criterion 2 – Avoid Shared Lead Tracks for Freight Trains and Intercity Trains at BNSF West Bank Yard	**No**. Track Alignment Alternative 11 would require BNSF freight trains and Amtrak intercity trains to share the same lead track to access their facilities in the vicinity of the BNSF West Bank Yard, respectively.
Criteria 3 – Avoid Lowering the Existing Red and Purple Line Subway	**Yes**. Track Alignment Alternative 11 would not require the lowering of the existing Red and Purple Line Subway.
Criteria 4 – Avoid Lowering the US-101 and the El Monte Busway	**Yes.** Track Alignment Alternative 11 would not require the lowering of US-101 and the El Monte Busway.

Table 5-4. Track Alignment Alternative 11 Screening Criteria Analysis	
Screening Criteria	**Meets Screening Criteria?**
Criteria 5 – Avoid Stacking Platforms for Regional/Intercity Rail Trains and HSR Trains	**Yes.** Track Alignment Alternative 11 would not include vertically stacked platforms for regional/intercity rail trains and HSR trains.
Criteria 6 – Avoid Adding an Eighth Platform for Regional/Intercity Rail Trains or HSR Trains	**No**. Track Alignment Alternative 11 would include the addition of an eighth platform at the LAUS rail yard to accommodate regional/intercity rail trains or HSR trains. Because of the addition of an eighth platform, Track Alignment 11 would also require relocation of the Gold Line Platform 1 at LAUS, as well as realignment of the existing Gold Line Viaduct north and south of LAUS.

Notes:
HSR=high-speed rail; LAUS=Los Angeles Union Station; Link US=Link Union Station; US-101=United States Highway 101

5.2.5 Track Alignment Alternative 14

As identified in Table 5-5, Track Alignment Alternative 14 (6 Regional/Intercity Rail Run-Through Tracks + 4 HSR Run-Through Tracks with shared lead tracks north of LAUS, no loop track, and dedicated lead tracks for BNSF freight trains and Amtrak trains) meets all six screening criteria. Therefore, Track Alignment Alternative 14 is recommended to be carried forward for detailed evaluation in the Link US Project EIS.

Table 5-5. Track Alignment Alternative 14 Screening Criteria Analysis	
Screening Criteria	**Meets Screening Criteria?**
Criterion 1 – Accommodate 10 Run-Through Tracks over US-101	**Yes**. Track Alignment Alternative 14 would accommodate 10 run-through tracks for regional/intercity rail trains and HSR trains.
Criterion 2 – Avoid Shared Lead Tracks for Freight Trains and Intercity Trains at BNSF West Bank Yard	**Yes**. Track Alignment Alternative 14 would allow for BNSF freight trains and Amtrak intercity trains to operate on dedicated lead tracks to access their facilities in the vicinity of the BNSF West Bank Yard, respectively.
Criterion 3 – Avoid Lowering the Existing Red and Purple Line Subway	**Yes**. Track Alignment Alternative 14 would not require the lowering of the existing Red and Purple Line Subway.
Criterion 4 – Avoid Lowering the US-101 and the El Monte Busway	**Yes.** Track Alignment Alternative 14 would not require the lowering of US-101 and the El Monte Busway.

Table 5-5. Track Alignment Alternative 14 Screening Criteria Analysis	
Screening Criteria	**Meets Screening Criteria?**
Criteria 5 – Avoid Stacking Platforms for Regional/Intercity Rail Trains and HSR Trains	**Yes.** Track Alignment Alternative 14 would not include vertically stacked platforms for regional/intercity rail trains and HSR trains.
Criteria 6 – Avoid Adding an Eighth Platform for Regional/Intercity Rail Trains or HSR Trains	**Yes.** Track Alignment Alternative 14 would not include an eighth platform at the LAUS rail yard to accommodate regional/intercity rail trains or HSR trains.

Notes:
HSR=high-speed rail; LAUS=Los Angeles Union Station; US-101=United States Highway 101

5.3 Recommendation Process

The results from the screening process identified Track Alignment Alternative 14 as the alternative recommended for detailed evaluation in the Link US Project EIS:

- **Track Alignment Alternative 14** – Track Alignment Alternative 14 would include shared lead tracks north of LAUS, an elevated throat and rail yard at LAUS, common bridges and embankments with associated civil/railroad infrastructure that would accommodate 10 run-through tracks (six run-through tracks for regional/intercity rail trains and four run-through tracks for HSR trains) from LAUS to the west bank of the Los Angeles River, with dedicated lead tracks for BNSF trains and Amtrak trains at the BNSF West Bank Yard. This track alignment alternative would also result in permanent loss of storage track capacity at the BNSF West Bank Yard (vicinity of 1st Street Bridge). This track alignment alternative is recommended for detailed evaluation in the Link US Project EIS because it meets the six screening criteria.

Track Alignment Alternative 14 is depicted on Figure 5-1.

Figure 5-1. Track Alignment Alternative 14

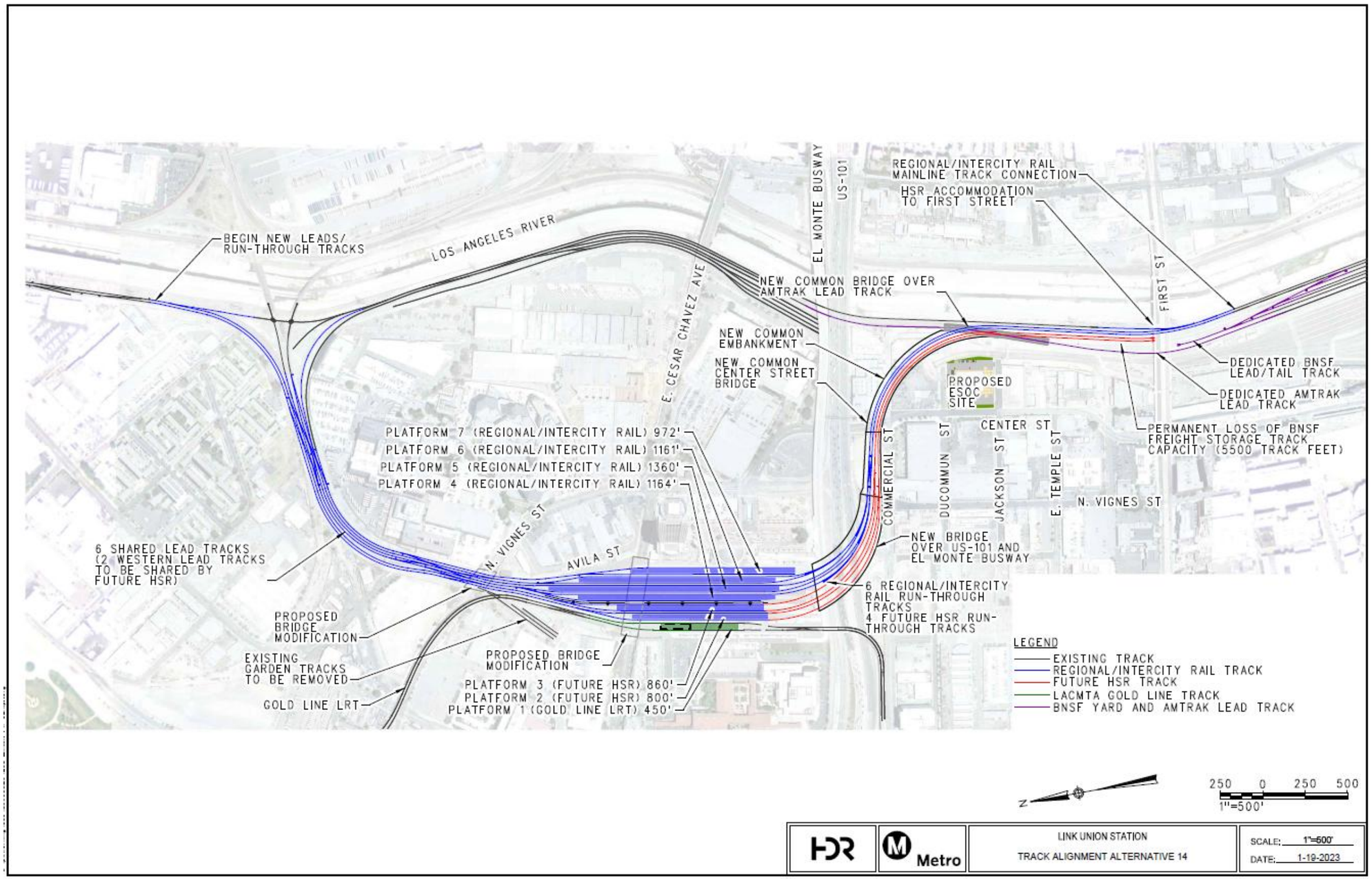

(THIS PAGE INTENTIONALLY LEFT BLANK)

6.0 Concourse Concepts

6.1 Screening Criteria

The screening process for concourse-related improvements was performed simultaneously with the evaluation of track alignment alternatives (discussed in Section 5.0). While the track alignment and concourse-related improvements would ultimately need to be compatible with one another, with exception of the vertical ceiling height below the rail yard, track alignment characteristics would not be substantially influenced by the location or configuration of the new passenger concourse. For this reason, the track alignment alternatives and concourse concepts were evaluated separately. The passenger concourse is a component that adapts to the configuration of the run-through track alignment alternatives.

As part of this alternative analysis, six screening criteria were considered and applied to the range of six concourse concepts. The six screening criteria that were used for the concourse concepts align with fundamental requirements essential to operation of a concourse and community preferences based on the substantial public feedback received on the Project to date. Any concourse concept that did not meet each of the six screening criteria was rejected from further consideration. The application of each screening criterion and how each passenger concourse concept was evaluated in light of that criterion is described below.

6.1.1 Criterion 1 – Add Passenger Capacity

This screening criterion examines the ability of the concourse concept to add passenger capacity in the form of additional physical space to support increased frequency of service and ridership while providing a more intuitive environment for passengers to navigate between Metro's bus and rail systems. Over 200,000 passenger trips are planned to occur through LAUS each weekday by 2040, which is almost double the number of passengers that currently pass through LAUS. Overall capacity and configuration of passenger space above or below the rail yard (which varies amongst each concept) is based on the ability to meet applicable NFPA 130 performance requirements for egress and safe evacuation (NFPA 130 Standard for Fixed Guideway Transit and Passenger Rail Systems), and as part of this evaluation, concourse concepts adding as much as 200 percent capacity were considered. Concourse concepts that would not increase passenger capacity by providing a larger space with a more open and intuitive environment were rejected from further consideration.

6.1.2 Criterion 2 – Provide Egress Routes and Safe Evacuation

This screening criterion examines the ability of the concourse concept to provide for safe evacuation from the passenger platforms along egress paths that meets NFPA 130 performance requirements. The NFPA 130 performance requirements establishe minimum design requirements for a station environment to evacuate its occupants under a presumed occupancy load. For LAUS, the presumed occupancy load is based on the forecasted passenger volumes (that are static across all concepts considered), associated with the substantial increase in train

movements projected to occur through LAUS. The concourse design should include multiple egress routes/points from the platforms to a point of safety. For each concourse concept, an evaluation was performed to determine if, and how many, additional exits would be required to evacuate passengers from the platforms within 15 minutes (performance requirement), using the existing passenger volumes through LAUS in 2018 as the baseline. The forecasted passenger volumes were incorporated into the evaluation to determine overall passenger capacity limitations (occupancy) to meet applicable code requirements. Concourse concepts that would not meet NFPA 130 performance requirements for egress and safe evacuation of passengers were rejected from further consideration.

6.1.3 Criterion 3 – Enhance Passenger Safety and Accessibility

This screening criterion considers the ability of the concourse to enhance safety and ADA accessibility throughout LAUS by including high-capacity, ADA-compliant VCEs for passengers to easily navigate between various levels of LAUS, including the concourse and platform levels. Additionally, the ability to enhance passenger services like Red Cap and passenger shuttles were also considered. Concourse concepts that would not enhance safety and ADA accessibility throughout LAUS were rejected from further consideration.

6.1.4 Criterion 4 – Optimize Concourse Space and Back-of-House Operations

This screening criterion examines the ability of the concourse concept to provide for separation of public and back-of-house operational/maintenance spaces, by considering back of house functions, anticipated passenger movements (i.e., rapid transfer versus casual shopper), and complementary functions, such as baggage handling and ticketing. Improving the efficiency of the baggage handling system can be achieved by clustering baggage drop-off and ticketing locations throughout the concourse space. Adjacency to elevators, vehicle routes, and baggage drop off and waiting areas are also considered. This screening criterion also examines the ability of the concourse concept to provide an enhanced passenger experience at LAUS with functionally modern civic space dedicated to passenger comfort, transit-serving retail, waiting areas, food, offices, baggage services, and back-of-house functions. Concourse concepts that would not provide for the separation of public passenger spaces from back-of-house operational/maintenance spaces or that woud not enhance the passenger experience at LAUS were rejected from further consideration.

6.1.5 Criterion 5 – Maintain or Improve Passenger Transfer Times

This screening criterion examines the ability of the concourse concept to maintain or improve passenger transfer times throughout LAUS in alignment with the feedback received from the public and stakeholders. Specifically, the purpose of the passenger transfer time analysis is to compare estimated transfer times for the existing condition to the estimated transfer times for the future condition assuming the forecasted passenger volumes and crowding/capacity limitations required by NFPA 130 performance requirements for concepts below and above the rail yard.

Using data collected from actual time trials captured during the AM and PM peak and off-peak conditions, and applying the projected ridership increase and associated passenger load/congestion forecasted at LAUS to the existing condition, the estimated passenger transfer times were determined for each concourse concept.

In the existing condition, passenger transfer times for the peak and off-peak period conditions range from 3 minutes and 39 seconds to 4 minutes and 42 seconds (from the south end of Platform 4 to the west end of the Red and Purple Line platform below the East Plaza using stairways). These measurements are based on passenger experience in 2018 and would be similar to 2023 conditions. Any concept that would exceed the current timeframes for cross-campus circulation were rejected from further consideration.

6.1.6 Criterion 6 – Align with Community Preference

Metro received a total of 634 public comments during the Link US Project Draft EIR 45-day public comment period, of which over 75 percent of the public comments opposed the above-grade concourse and indicated the preference for the new modified expanded passageway or at-grade passenger concourse. This screening criterion examines the ability of the concourse concept to address community preferences originally identified as part of the CEQA process. Concourse concepts that would not align with the preferences expressed by the community were rejected from further consideration.

6.2 Passenger Concourse Concepts Screening Results

Each of the six passenger concourse concepts (described in Table 4-2) was screened based on the six criteria discussed in Section 6.1. Of the concourse concepts considered, four concepts did not meet all screening criteria and were therefore rejected from further consideration. Table 6-1 through Table 6-6 provides details of the screening process conducted for each of the concourse concepts considered. One concept (Concourse Concept 3) does meet all screening criteria; however, this concept was removed from further consideration due to cost and potential for increased environmental impacts related to emissions and traffic during construction, archaeological resources, contaminated soils, and contaminated groundwater, as disclosed in the Final EIR for the Link US Project.

6.2.1 Concourse Concept 1

As identified in Table 6-1, Concourse Concept 1 (Maintain Passageway Concourse) meets one of the six screening criteria. However, Concourse Concept 1 was rejected from further consideration because it does not meet Criteria 1 through 5.

Table 6-1. Concourse Concept 1 Screening Criteria Analysis

Screening Criteria	Meets Screening Criteria?
Criterion 1 – Add Passenger Capacity	**No.** Concourse Concept 1 would not expand the passenger capacity of the concourse to accommodate increased frequency of service and ridership at LAUS. This concourse concept would result in a crowded and congested environment that would be challenging to navigate, affecting the ability for transfers to occur optimally.
Criterion 2 – Provide Egress Routes and Safe Evacuation	**No.** Concourse Concept 1 would not provide adequate egress paths that meet NFPA 130 performance requirements for egress and safe evacuation because the existing ramps would be retained that do not conform to NFPA 130 performance requirements for ramp length and availability of egress options to serve existing and projected passenger volumes. Ramps would need to be nearly 400 feet in length with a nearly 200-foot-long opening in the platform. A specific issue identified with this concourse concept is that NFPA 130 requires an exit within 325 feet of any passenger and egress within 82 feet of a platform end. The existing pedestrian passageway and rail yard do not conform to these requirements.
Criterion 3 – Enhance Passenger Safety and Accessibility	**No.** Concourse Concept 1 would not enhance ADA accessibility throughout LAUS because it would not include modernized VCEs to aid ADA compliance. Additionally, the lengthened ramps needed for this concourse concept would extend up to 300 feet in length, thereby increasing the vertical climb and descent for the passenger.
Criterion 4 – Optimize Concourse Space and Back-of-House Operations	**No.** Concourse Concept 1 would not allow for the separation of public from back-of-house spaces or provide a functionally modern passenger experience at LAUS because no change would occur to the existing program organization and operations at LAUS; although there would be an increase in projected ridership that could strain the operations beyond their current capacity. Additionally, Concourse Concept 1 would not improve the efficiency of baggage handling operations because baggage tug routes on the southern end of the platforms would be unusable after run-through tracks are in place, and baggage tugs would be unable to cross the rail yard where the run-through track structure is proposed. No alternative baggage handling concepts have been identified that would maintain the baggage tug routes for this concourse concept.
Criterion 5 – Maintain or Improve Passenger Transfer Times	**No.** Concourse Concept 1 would not maintain passenger travel times throughout LAUS. Although the main path for pedestrian travel would be maintained below the rail yard, the increased passenger loads are assumed to increase crowding thus resulting in potentially longer passenger transfer times as the existing condition.
Criterion 6 – Align with Community Preference	**Yes.** Concourse Concept 1 would align with community preferences as the main path for pedestrian travel would be maintained below the rail yard.

Notes:
ADA=Americans with Disabilities Act; LAUS=Los Angeles Union Station; NFPA=National Fire Protection Association; VCE=vertical circulation element

6.2.2 Concourse Concept 2

As identified in Table 6-2, Concourse Concept 2 (Widened Passageway Concourse) meets two of the six screening criteria. However, Concourse Concept 2 was rejected from further consideration because it does not meet Criteria 2 through 5.

Table 6-2. Concourse Concept 2 Screening Criteria Analysis

Screening Criteria	Meets Screening Criteria?
Criterion 1 – Add Passenger Capacity	**Yes.** Concourse Concept 2 would add passenger capacity below the rail yard because the passageway would be widened to a width of approximately 90 feet, but would not allow for increased passenger capacity on the platforms because of the insufficiency of VCEs to accommodate future station conditions (see Criteria 2 and 3 analysis below). Concourse Concept 2 would improve transit interconnectivity to various transit avenues (such as the El Monte Busway, Patsaouras Transit Plaza, Amtrak Bus Bays, and Metro rail lines).
Criterion 2 – Provide Egress Routes and Safe Evacuation	**No.** Concourse Concept 2 would not provide adequate egress paths that meet NFPA 130 performance requirements for egress and safe evacuation because the concourse concept does not include additional egress routes needed to accommodate projected passenger volumes.
Criterion 3 – Enhance Passenger Safety and Accessibility	**No.** Concourse Concept 2 would include high capacity VCEs, but site restrictions (i.e., Red Line tunnel) prevent placement of VCEs at optimal locations resulting in a series of complicated circulation zones that do not facilitate free flowing passenger circulation because they do not connect immediately to an open central passenger concourse.
Criterion 4 – Optimize Concourse Space and Back-of-House Operations	**No.** Concourse Concept 2 would not allow for the separation of public from back-of-house spaces or provide a functionally modern passenger experience at LAUS because no change would occur to the existing program organization and operations at LAUS; although there would be an increase in projected ridership that could strain the operations beyond their current capacity. Additionally, Concourse Concept 2 would not improve the efficiency of baggage handling operations because the implementation of baggage handling ramps would displace VCEs on the northern side of the platforms.
Criterion 5 – Maintain or Improve Passenger Transfer Times	**No.** Concourse Concept 2 would not maintain passenger travel times throughout LAUS. Although the main path for pedestrian travel would be maintained below the rail yard and the passageway would be widened, the number of exits from the platform isn't increased to handle the increased passenger volumes or the assumed increased crowding thereby resulting in potentially similar or longer passenger transfer times as the existing condition.
Criterion 6 – Align with Community Preference	**Yes.** Concourse Concept 2 would align with community preferences as the main path for pedestrian travel would be maintained below the rail yard.

Notes:
LAUS=Los Angeles Union Station; Metro=Los Angeles County Metropolitan Transportation Authority; NFPA=National Fire Protection Association; VCE=vertical circulation element

6.2.3 Concourse Concept 3

As identified in Table 6-3, Concourse Concept 3 (At-Grade Concourse) meets all six of the screening criteria; however, based on the full environmental evaluation of environmental impacts performed by Metro in the Link US Final EIR, Meto elected to remove this concept from further consideration in the Link US Project EIS.

Table 6-3. Concourse Concept 3 Screening Criteria Analysis

Screening Criteria	Meets Screening Criteria?
Criterion 1 – Add Passenger Capacity	**Yes.** Concourse Concept 3 would add passenger capacity below the rail yard because the passageway would be widened to a width of approximately 300 feet. Concourse Concept 3 would to accommodate increased frequency of service and ridership at LAUS while also improving transit interconnectivity to various transit avenues (such as the El Monte Busway, Patsaouras Transit Plaza, Amtrak Bus Bays, and Metro rail lines).
Criterion 2 – Provide Egress Routes and Safe Evacuation	**Yes.** Concourse Concept 3 would provide adequate egress paths that meet NFPA 130 performance requirements for egress and safe evacuation by introducing dedicated egress corridors where emergency stairs are positioned at both the center and ends of the platforms so the passenger can select the closest and safest exit relative to their position on a given platform.
Criterion 3 – Enhance Passenger Safety and Accessibility	**Yes.** Concourse Concept 3 would enhance ADA accessibility throughout LAUS because it would include modernized VCEs that connect directly from the platforms to the concourse to aid ADA compliance. Concourse Concept 3 also provides an open space below the rail yard with wider sight lines that aid with passenger orientation.
Criterion 4 – Optimize Concourse Space and Back-of-House Operations	**Yes.** Concourse Concept 3 would allow for separation of public spaces from back-of-house spaces by placing all support spaces outside of the area accessible to the public, grouped into northern and southern back-of-house areas. Concourse Concept 3 would improve baggage handling operations by providing more efficient and direct routes between the platforms, passenger ticketing, and baggage drop-off/pick-up areas. Baggage services would be relocated to a centralized location at the concourse level with new carousels for pick up; this would shorten the distance between the baggage drop off/pick up points and the arrival/departure point on the platform. Concourse Concept 3 also provides a functionally modern passenger experience at LAUS that includes retail and office/commercial activities integrated without impacting passenger flows.
Criterion 5 – Maintain or Improve Passenger Transfer Times	**Yes**. Concourse Concept 3 would improve passenger travel times. Specifically, a 12-second or 6 percent decrease in transfer time compared with the existing condition is expected during off-peak conditions, and a 36-second or 13 percent decrease in transfer time compared with the existing condition is expected during peak conditions. This transfer time data includes assumptions for crowding associated with the forecasted passenger volumes and is taken from between the south end of Platform 4 and the east and west ends of the Red/Purple Line Platform using stairways. Transfer time data is consistent with the data that was presented to the Metro Board of Directors in December 2018.
Criterion 6 – Align with Community Preference	**Yes.** Concourse Concept 3 would align with community preferences as the main path for pedestrian travel would be maintained below the rail yard.

Notes:
ADA=Americans with Disabilities Act; LAUS=Los Angeles Union Station; Metro=Los Angeles County Metropolitan Transportation Authority; NFPA=National Fire Protection Association; VCE=vertical circulation element

6.2.4 Concourse Concept 4

As identified in Table 6-4, Concourse Concept 4 (Above-Grade Concourse) meets four out of the six screening criteria. However, Concourse Concept 4 was rejected from further consideration because it does not meet Criteria 5 and Criteria 6.

Table 6-4. Concourse Concept 4 Screening Criteria Analysis

Screening Criteria	Meets Screening Criteria?
Criterion 1 – Add Passenger Capacity	**Yes.** Concourse Concept 4 would add passenger capacity with adequate space to accommodate increased frequency of service and ridership at LAUS; although passengers would experience a more circuitous and complex route to various transit avenues (such as the El Monte Busway, Patsaouras Transit Plaza, Amtrak Bus Bays, and Metro rail lines).
Criterion 2 – Provide Egress Routes and Safe Evacuation	**Yes.** Concourse Concept 4 would provide adequate egress paths that meet NFPA 130 performance requirements for egress and safe evacuation by introducing dedicated egress corridors to be used during evacuation events only and offering multiple options for passenger egress.
Criterion 3 – Enhance Passenger Safety and Accessibility	**Yes.** Concourse Concept 4 would enhance ADA accessibility throughout LAUS because it would include modernized VCEs that connect directly from the platforms to the concourse above the rail yard to aid ADA compliance.
Criterion 4 – Optimize Concourse Space and Back-of-House Operations	**Yes.** Concourse Concept 4 would allow for separation of public spaces from back-of-house spaces with a layout designed to allow passenger movements through the plazas and directly to the above-grade portion of the concourse away from back-of-house operations placed at-grade under the platforms. Concourse Concept 4 also provides a functionally modern passenger experience at LAUS that includes retail and office/commercial activities integrated without impacting passenger flows. Concourse Concept 4 would improve baggage handling operations by providing more efficient and direct routes between the platforms and passenger ticketing/baggage drop-off locations in the East and West Plazas. Baggage handling operations would be located in the West Plaza adjacent to the platforms. Baggage would be transferred via tug tunnels connecting to a new back-of-house passageway under the platforms, which provides a more efficient and direct route to the baggage handling facility rather than what would be offered with the existing conditions. Amtrak Red Cap service would also use the tug tunnels and thus be away from pedestrian traffic. Additionally, baggage carts would not have to cross tracks as they currently do in the existing station.
Criterion 5 – Maintain or Improve Passenger Transfer Times	**No**. Concourse Concept 4 would not improve passenger transfer times. Specifically, a 1-minute and 21-second or 37 percent increase in transfer time compared with the existing condition is expected during off-peak conditions, and a 40-second or 14 percent increase in transfer time compared with the existing condition is expected during peak conditions. This transfer time data includes assumptions for crowding associated with the forecasted passenger volumes and is taken from between the south end of Platform 4 and the east and west ends of the Red/Purple Line Platform using stairways (Metro 2018).

Table 6-4. Concourse Concept 4 Screening Criteria Analysis	
Screening Criteria	**Meets Screening Criteria?**
Criterion 6 – Align with Community Preference	**No.** Concourse Concept 4 would not align with community preferences as the main path for pedestrian travel would be above the rail yard.

Notes:
ADA=Americans with Disabilities Act; LAUS=Los Angeles Union Station; Metro=Los Angeles County Metropolitan Transportation Authority; NFPA=National Fire Protection Association; VCE=vertical circulation element

6.2.5 Concourse Concept 5

As identified in Table 6-5, Concourse Concept 5 (Above-Grade Concourse with New Expanded Passageway) meets four of the six screening criteria. However, Concourse Concept 5 was rejected from further consideration because it does not meet Criteria 5 and Criteria 6.

Table 6-5. Concourse Concept 5 Screening Criteria Analysis	
Screening Criteria	**Meets Screening Criteria?**
Criterion 1 – Add Passenger Capacity	**Yes.** Concourse Concept 5 would add passenger capacity with adequate space to accommodate increased frequency of service and ridership at LAUS. The open design of this concept offers a more intuitive way finding environment with increased sight lines that make the other transit modes visible which optimizes transfers. Passenger movements would occur above or below the rail yard. Located below the rail yard, the 120-foot-wide expanded passageway would offer expedient point to point connections. This concept improves transit interconnectivity by enhancing access and passenger movements to various transit avenues (such as the El Monte Busway, Patsaouras Transit Plaza, Amtrak Bus Bays, and Metro rail lines).
Criterion 2 – Provide Egress Routes and Safe Evacuation	**Yes.** Concourse Concept 5 would provide multiple egress routes, including the elevated portion, the expanded passageway, and dedicated egress corridors that would be used during an evacuation event only. The combined egress paths from the elevated portion of the concourse, the expanded passageway, and the emergency stairs are used and positioned to meet NFPA 130 performance requirements.
Criterion 3 – Enhance Passenger Safety and Accessibility	**Yes.** Concourse Concept 5 would enhance ADA accessibility throughout LAUS because it would include modernized VCEs that connect directly from the platforms to the elevated portion of the concourse above the rail yard and to the expanded passageway below the rail yard to aid in ADA compliance.
Criterion 4 – Optimize Concourse Space and Back-of-House Operations	**Yes.** Concourse Concept 5 would allow for separation of public spaces from back-of-house spaces and would provide a functionally modern passenger experience at LAUS with a layout designed to allow passenger movements through the plazas and directly to the elevated portion of the concourse away from back-of-house operations, which would be located at-grade under the platforms away from the expanded passageway. Concourse Concept 5 would improve baggage handling operations by providing more efficient and direct routes between the platforms, passenger ticketing, and baggage drop-off/pick-up areas. Baggage pick up would occur in the new expanded passageway. A new baggage handling operations facility would be located

Table 6-5. Concourse Concept 5 Screening Criteria Analysis	
Screening Criteria	**Meets Screening Criteria?**
	adjacent to and north of the new expanded passageway, and baggage would be transferred via ramped tug tunnels leading to the Amtrak platform.
Criterion 5 – Maintain or Improve Passenger Transfer Times	**No**. Concourse Concept 5 would improve passenger travel times for passengers using the 120-foot-wide expanded passageway, but not for passengers using the above-grade component – these times would be similar to the Above Grade Concourse passenger transfer times described above for Concourse Concept 4. For passengers using the 120-foot-wide expanded passageway, a 27-second or 12 percent decrease in transfer time compared with the existing condition is expected during off-peak conditions, and a 47-second or 17 percent decrease in transfer time compared with the existing condition is expected during peak conditions.
Criterion 6 – Align with Community Preference	**No.** Concourse Concept 5 would not align with community preferences because it includes an above-grade component.

Notes:
ADA=Americans with Disabilities Act; LAUS=Los Angeles Union Station; Metro=Los Angeles County Metropolitan Transportation Authority; NFPA=National Fire Protection Association; VCE=vertical circulation element

6.2.6 Concourse Concept 6

As identified in Table 6-6, Concourse Concept 6 (Expanded Passageway) meets all six screening criteria. Therefore, Concourse Concept 6 is recommended to be carried forward for evaluation.

Table 6-6. Concourse Concept 6 Screening Criteria Analysis	
Screening Criteria	**Meets Screening Criteria?**
Criterion 1 – Add Passenger Capacity	**Yes.** Concourse Concept 6 would add passenger capacity with a passageway four times the size of the existing passageway to accommodate increased frequency of service and ridership at LAUS. Located below the rail yard, the 140-foot-wide expanded passageway would offer expedient point to point connections where users are moving in rapid and large volumes in route to their final destinations. This concept includes passenger waiting areas below the rail yard and improves transit interconnectivity by enhancing access and passenger movements to various transit avenues (such as the El Monte Busway, Patsaouras Transit Plaza, Amtrak Bus Bays, and Metro rail lines).
Criterion 2 – Provide Egress Routes and Safe Evacuation	**Yes.** Concourse Concept 6 would provide adequate egress paths that meet NFPA 130 performance requirements for egress and safe evacuation by introducing dedicated egress corridors to be used during evacuation events only and offering multiple options for passenger egress.
Criterion 3 – Enhance Passenger Safety and Accessibility	**Yes.** Concourse Concept 6 would enhance ADA accessibility throughout LAUS because it would include modernized VCEs that connect directly from the platforms to the expanded passageway below the rail yard to aid in ADA compliance.

Table 6-6. Concourse Concept 6 Screening Criteria Analysis

Screening Criteria	Meets Screening Criteria?
Criterion 4 – Optimize Concourse Space and Back-of-House Operations	**Yes.** Concourse Concept 6 would allow for separation of public spaces from back-of-house spaces and provide a functionally modern passenger experience at LAUS. Concourse Concept 6 would improve baggage handling operations by providing more efficient and direct routes between the platforms, passenger ticketing, and baggage drop-off/pick-up areas. Passenger ticketing/baggage drop off locations would occur in the East and West Plazas, and baggage pick up would occur in the new expanded passageway. A new baggage handling operations facility would be located adjacent to and north of the new expanded passageway. Baggage would be transferred via ramped tug tunnels leading to the Amtrak platform.
Criterion 5 – Maintain or Improve Passenger Transfer Times	**Yes**. Passengers using the 140-foot-wide expanded passageway as part of Concourse Concept 6 would have similar passenger transfer times to what is described above for the 120-foot-wide expanded passageway as part of Concourse Concept 5. For passengers using the expanded passageway below the rail yard, even with a 140-foot-wide opening, a 27-second or 12 percent decrease in transfer time compared with the existing condition is expected during off-peak conditions, and a 47-second or 17 percent decrease in transfer time compared with the existing condition is expected during peak conditions.
Criterion 6 – Align with Community Preference	**Yes.** Concourse Concept 6 would align with community preferences as the main path for pedestrian travel would be maintained below the rail yard.

Notes:
ADA=Americans with Disabilities Act; LAUS=Los Angeles Union Station; Metro=Los Angeles County Metropolitan Transportation Authority; NFPA=National Fire Protection Association; VCE=vertical circulation element

6.3 Recommendation Process

Based on the results from the screening process, Concourse Concept 6 (Expanded Passageway) is recommended for detailed evaluation in the Link US Project EIS:

- **Concourse Concept 6 (Expanded Passageway)** – The existing 28-foot-wide pedestrian passageway would be replaced with a 140-foot-wide expanded passageway below the rail yard. The expanded passageway would also add passenger capacity, meet applicable NFPA 130 performance requirements for egress and safe evacuation, enhance passenger safety and ADA accessibility with new VCEs (stairs, escalators, and elevators), optimize concourse space and back-of-house operations, and improve passenger transfer times in alignment with community preferences. This concept is recommended for detailed evaluation in the Link US Project EIS because it meets the six screening criteria.

Concourse Concept 6 (Expanded Passageway) is depicted on Figure 6-1.

Figure 6-1. Concourse Concept 6 (Expanded Passageway)

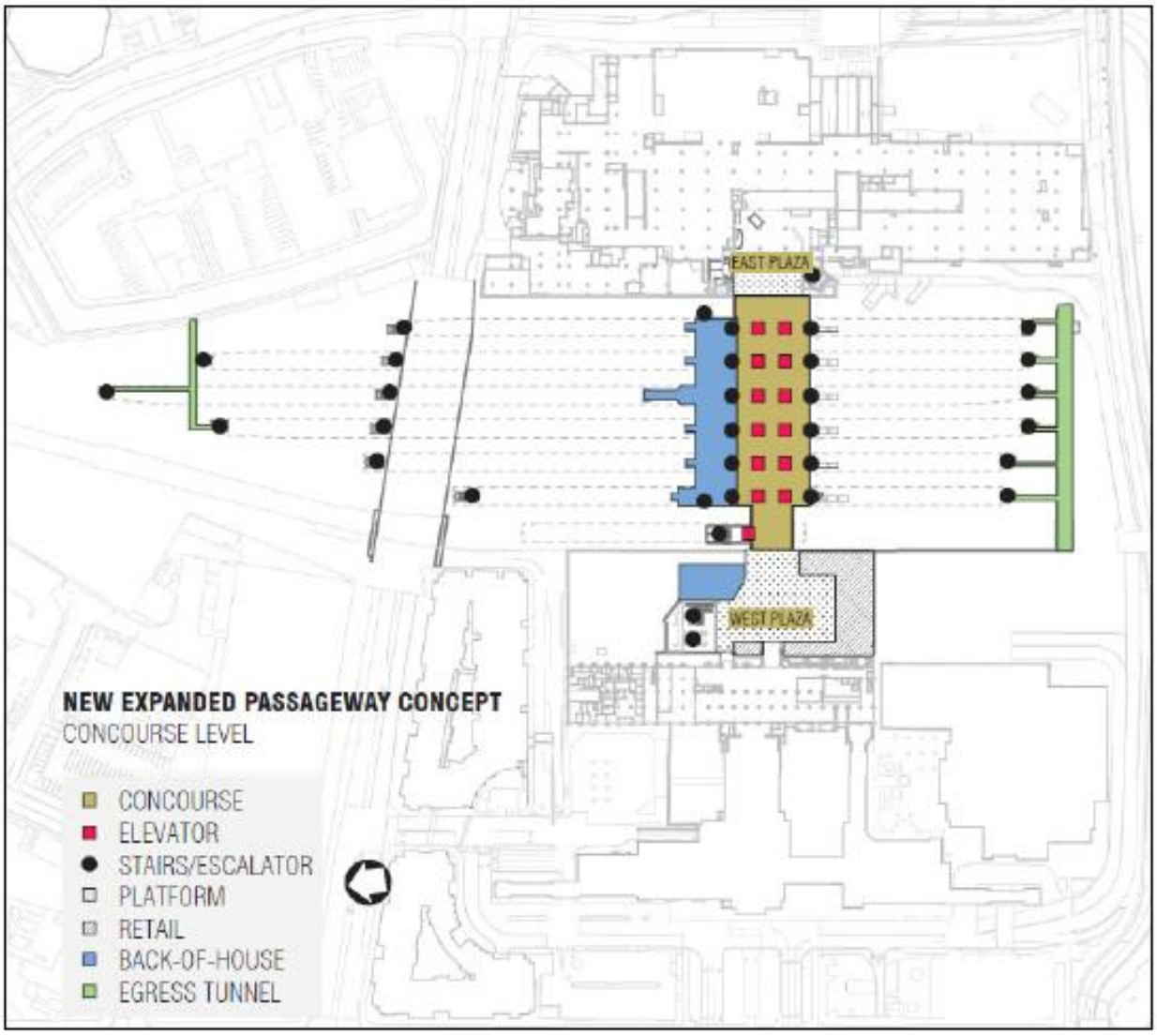

(THIS PAGE INTENTIONALLY LEFT BLANK)

7.0 Summary and Findings

The identification, consideration, and analysis of alternatives are key to the NEPA process and goal of objective decision making. Council on Environmental Quality regulations (40 Code of Federal Regulations Section 1500-1508) address the basic decision-making framework established in NEPA, including:

- Assessment of the social, economic, and environmental impacts of a proposed action or project
- Analysis of a range of reasonable alternatives to the proposed project based on the defined purpose and need for the project
- Interagency participation, coordination, and consultation
- Public involvement including opportunities to participate and comment
- Documentation and disclosure

A full range of track alignment alternatives and passenger concourse concepts were considered throughout the alternatives analysis process. As a result of the screening process, one track alignment alternative and one concourse concept is recommended for detailed evaluation in the Link US EIS in addition to the No Action Alternative. As shown below, the track alignment and concourse concept are grouped together as part of the proposed Build Alternative for ease of evaluation.

7.1 No Action Alternative

NEPA (40 Code of Federal Regulations [CFR] 1502.14(d))[5] requires federal agencies to include an analysis of "the alternative of no action." For NEPA purposes, the No Action Alternative is the baseline against which the effect of implementing the Project is evaluated to determine the extent of environmental and community effects. For the No Action Alternative, the baseline year is 2016 and the horizon year is 2040.

The No Action Alternative represents the future conditions that would occur if the proposed infrastructure improvements and the operational capacity enhancements at LAUS were not implemented, and reflects the foreseeable effects of growth planned for the area in conjunction with other existing, planned, and reasonably foreseeable projects and infrastructure improvements.

[5] The CEQ issued new regulations, effective April 20, 2022, updating the NEPA implementing procedures at 40 CFR Parts 1500–1508. However, because this environmental document was initiated prior to the effective date, it is not subject to the new regulations and CHSRA is relying on the regulations as they existed on the date of the initial Notice of Intent, May 31, 2016. Therefore, all citations to CEQ regulations in this environmental document refer to the 1978 regulations and the 1986 amendment, 51 *Federal Register* 15618 (Apr. 25, 1986).

7.2 Build Alternative

The Build Alternative would include a shared track alignment with six lead tracks north of LAUS, a 140-foot-wide expanded passageway at LAUS, and 10 run-through tracks south of LAUS (six for regional/intercity trains and four for HSR trains), with dedicated lead tracks for BNSF freight trains and Amtrak intercity trains at the BNSF West Bank Yard. The infrastructure elements associated with the Build Alternative are summarized below, north to south:

- North of LAUS
  - Shared track alignment (two compatible lead tracks for HSR service)
  - Reconstructed throat (one new lead track) from Control Point Chavez to Cesar Chavez Avenue
  - Vignes Street Bridge and Cesar Chavez Avenue Bridge replacements
  - Safety improvements at Main Street to facilitate future implementation of a quiet zone by the City of Los Angeles
- LAUS Rail Yard
  - Elevated rail yard with seven new platforms (Platforms 2 and 3 to meet CHSRA level boarding requirements)
  - 140-foot-wide expanded passageway with East and West Plazas
  - New VCEs (stairs, escalators, and elevators) between the elevated platforms and the expanded passageway below the rail yard
- South of LAUS
  - Common bridges and embankments with associated civil/railroad infrastructure that would accommodate six run-through tracks for regional/intercity rail trains and four run-through tracks for high speed rail trains from LAUS to the west bank of the Los Angeles River
  - Dedicated lead tracks for BNSF freight trains and Amtrak trains at BNSF West Bank Yard
  - Permanent loss of approximately 5,500 track feet of storage track capacity at BNSF West Bank Yard

8.0 References

California Department of Transportation (Caltrans). 2018. California State Rail Plan: Connecting California. https://dot.ca.gov/programs/rail-and-mass-transportation/2018-california-state-rail-plan.

——— 2021. California Transportation Plan 2050. dot.ca.gov/-/media/dot-media/programs/transportation-planning/documents/ctp-2050-v3-a11y.pdf.

California Department of Transportation (Caltrans) and Federal Railroad Administration (FRA). 2002. *Amtrak Union Station Run-Through Tracks Alternatives Analysis Report*.

——— 2005. Los Angeles Union Station Run-Through Tracks Environmental Impact Statement/Environmental Impact Report.

California High-Speed Rail Authority (CHSRA). 2021. *Burbank to Los Angeles Project Section Final EIR/EIS*. Chapter 2: Alternatives (ca.gov).

Los Angeles County Metropolitan Transportation Authority (Metro). 2015a. *Transforming Los Angeles Union Station, A Summary Report.* https://media.metro.net/projects_studies/union_station/images/LAUS_Design_Report-Final_10-9-15.pdf.

——— 2015b. Los Angeles Union Station Master Plan.

——— 2015c. *Connect US Action Plan*. http://media.metro.net/projects_studies/union_station/images/LAUSMP_Action_Plan_Final_100515.pdf.

——— 2018. Draft Link US Concourse Study. Link Union Station Project. Prepared by HDR Engineering, Inc.

Southern California Association of Governments (SCAG). 2008. *Final 2008 Regional Comprehensive Plan*.

——— 2020. *2020 Regional Transportation Plan/Sustainable Communities Strategy*: Connect So Cal. https://scag.ca.gov/sites/main/files/file-attachments/0903fconnectsocal-plan_0.pdf?1606001176.

(THIS PAGE INTENTIONALLY LEFT BLANK)

Attachment A:
Track Alignment Alternatives Considered

(THIS PAGE INTENTIONALLY LEFT BLANK)

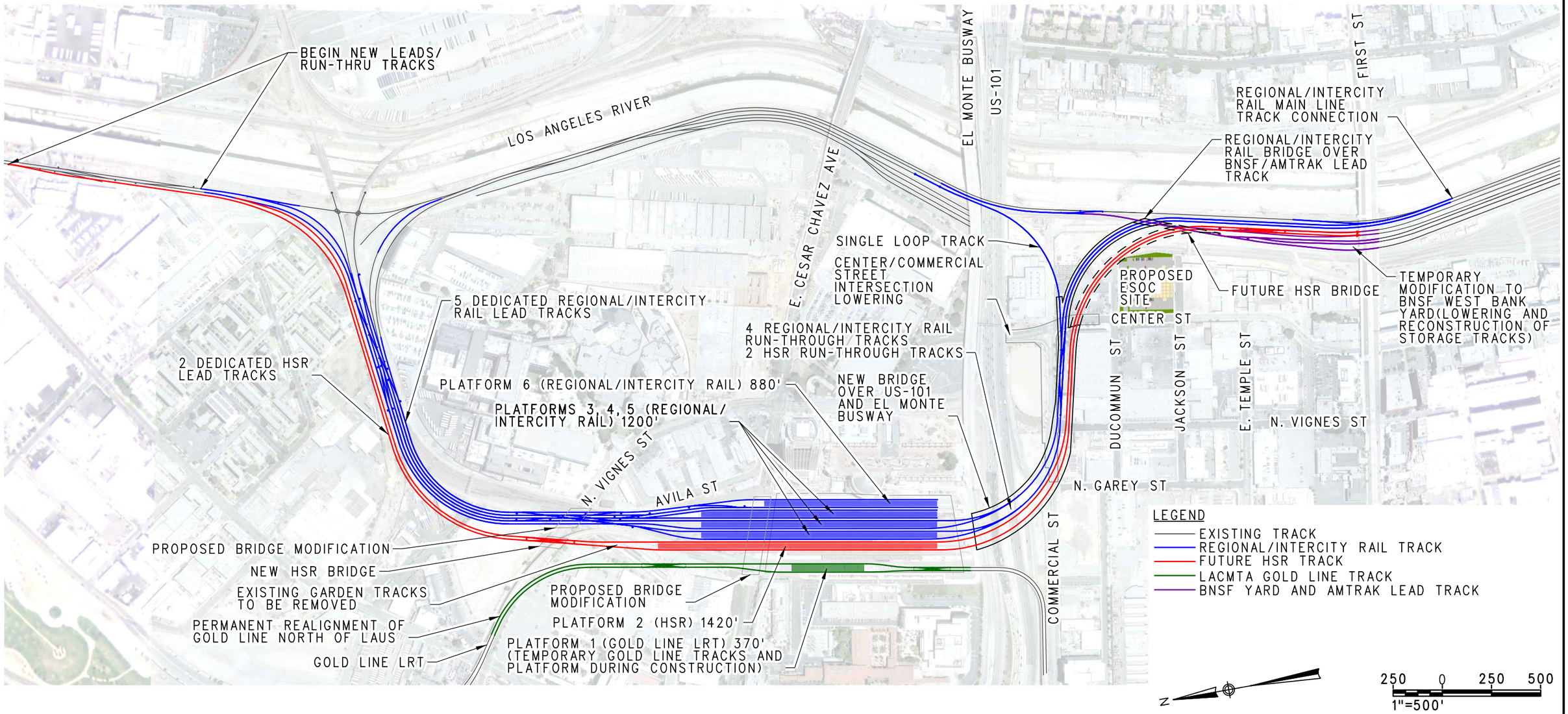

HDR	Metro	LINK UNION STATION TRACK ALIGNMENT ALTERNATIVE 1	SCALE: 1"=500' DATE: 1-19-2023

1/18/2023 3:38:42 PM
c:\pwworking\sac\d1068027\LUS-Exhibit_Track Alternative 1.dgn
pw:\\pwappsac01:California_Sacramento\Documents\Los_Angeles_Metro_Transportation_Auth\SCRIP\13.00_CAD_BIM\13.01_CAD_Data\PRJ_CAD_STD\PLOTDRV\PlotStamp
c:\pwworking\sac\d0603326\LUS-Exhibit-FW-CLR.pltcfg

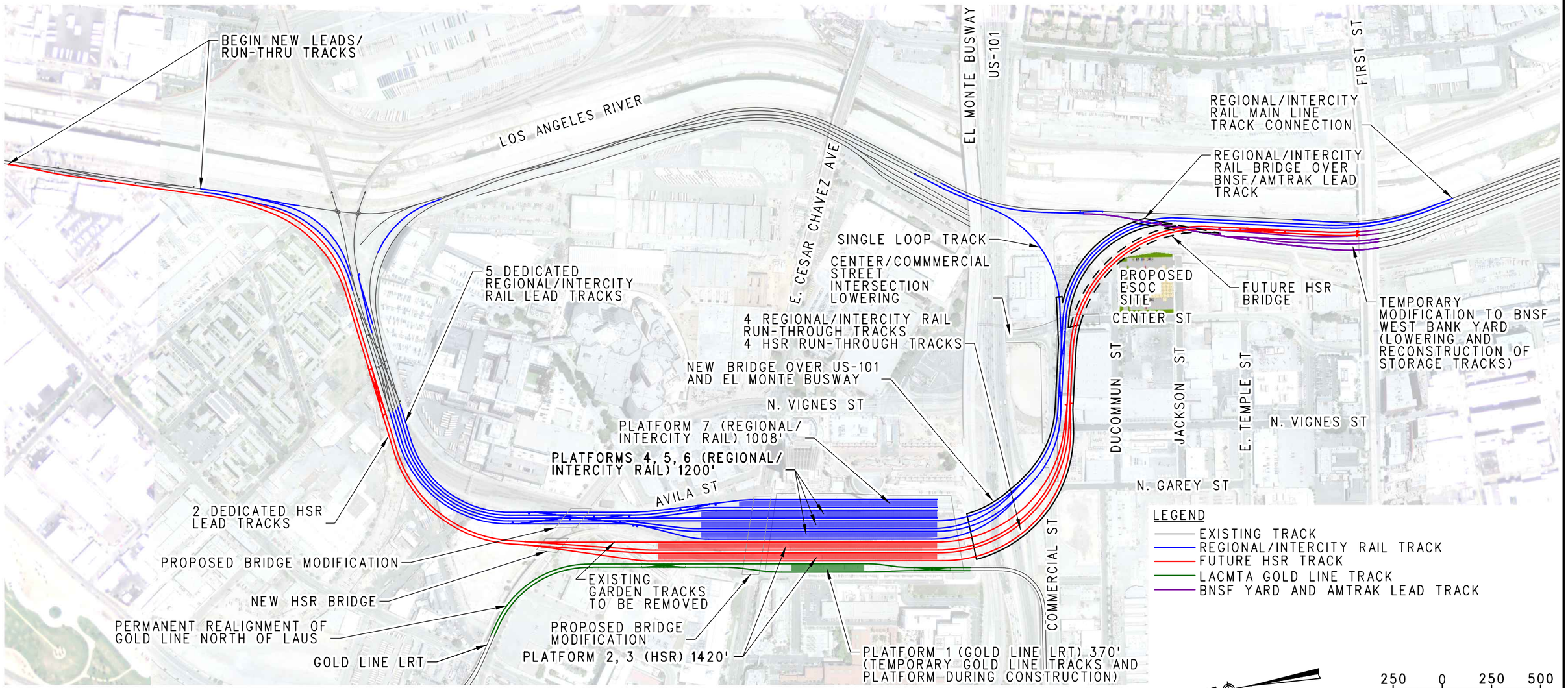

HDR	Metro	LINK UNION STATION TRACK ALIGNMENT ALTERNATIVE 2	SCALE: 1"=500' DATE: 1-19-2023

1/18/2023 3:41:34 PM
c:\pwworking\sac\d1068027\LUS-Exhibit_Track Alternative 2.dgn
C:\Users\amull\Desktop\PlotStamp.tbl
c:\pwworking\sac\d0603326\LUS-Exhibit-FW-CLR.pltcfg

BEGIN NEW LEADS/
RUN-THRU TRACKS

LOS ANGELES RIVER

5 DEDICATED
REGIONAL/INTERCITY
RAIL LEAD TRACKS

E. CESAR CHAVEZ AVE

EL MONTE BUSWAY

US-101

FIRST ST

REGIONAL/INTERCITY
RAIL MAIN LINE
TRACK CONNECTION

REGIONAL/INTERCITY
RAIL BRIDGE OVER
BNSF/AMTRAK LEAD
TRACK

SINGLE LOOP TRACK

CENTER/COMMERCIAL
STREET
INTERSECTION
LOWERING

PROPOSED
ESOC
SITE

FUTURE HSR
BRIDGE

TEMPORARY
MODIFICATION TO BNSF
WEST BANK YARD
(LOWERING AND
RECONSTRUCTION OF
STORAGE TRACKS)

CENTER ST

NEW BRIDGE OVER US-101 AND
EL MONTE BUSWAY

DUCOMMUN ST

JACKSON ST

E. TEMPLE ST

N. VIGNES ST

5 REGIONAL/INTERCITY RAIL RUN-THROUGH TRACKS
2 HSR RUN-THROUGH TRACKS

N. VIGNES ST

PLATFORM 6 (REGIONAL/
INTERCITY RAIL) 880'

PLATFORMS 3, 4, 5 (REGIONAL/
INTERCITY RAIL) 1200'

2 DEDICATED HSR
LEAD TRACKS

AVILA ST

N. GAREY ST

PROPOSED BRIDGE MODIFICATION

NEW HSR BRIDGE

EXISTING
GARDEN TRACKS
TO BE REMOVED

PROPOSED BRIDGE
MODIFICATION

COMMERCIAL ST

PERMANENT REALIGNMENT OF
GOLD LINE NORTH OF LAUS

GOLD LINE LRT

PLATFORM 1 (GOLD LINE LRT) 370'
(TEMPORARY GOLD LINE TRACKS AND
PLATFORM DURING CONSTRUCTION)

PLATFORM 2 (HSR) 1420'

LEGEND

- EXISTING TRACK
- REGIONAL/INTERCITY RAIL TRACK
- FUTURE HSR TRACK
- LACMTA GOLD LINE TRACK
- BNSF YARD AND AMTRAK LEAD TRACK

N

250 0 250 500

1"=500'

HDR | Metro

LINK UNION STATION

TRACK ALIGNMENT ALTERNATIVE 3

SCALE: 1"=500'

DATE: 1-19-2023

1/18/2023 3:43:46 PM
c:\pwworking\soc\d0686027\LUS-Exhibit_Track Alternative 3.dgn
C:\Users\mnull\Desktop\PlotStamp.tbl
c:\pwworking\soc\d0603326\LUS-Exhibit-FW-CLR.pltcfg

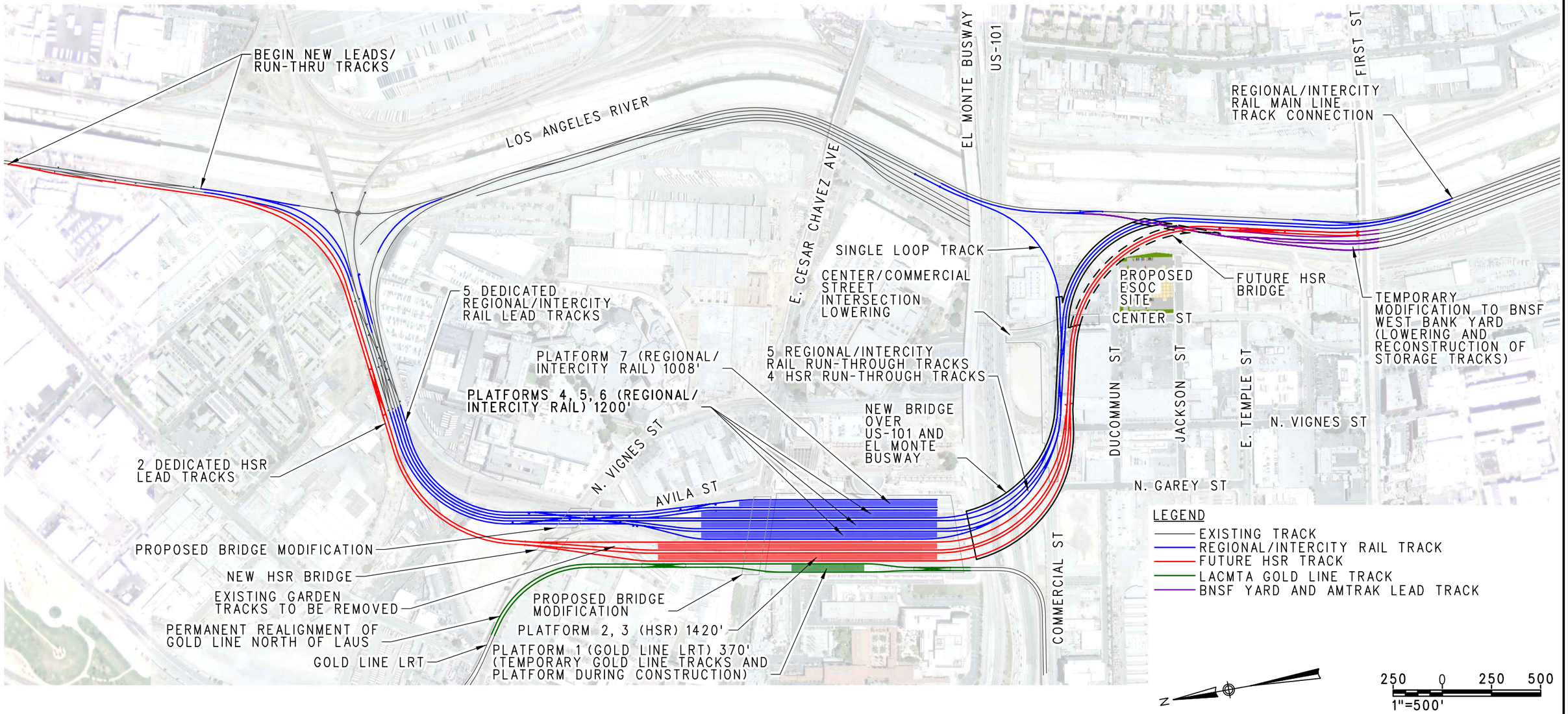

HDR	Metro	LINK UNION STATION TRACK ALIGNMENT ALTERNATIVE 4	SCALE: 1"=500' DATE: 1-19-2023

1/18/2023 3:46:09 PM
c:\pwworking\soc\d0680027\LUS-Exhibit_Track Alternative 4.dgn
C:\Users\rmull\Desktop\PlotStamp.tbl
c:\pwworking\soc\d0603326\LUS-Exhibit-FW-CLR.pltcfg

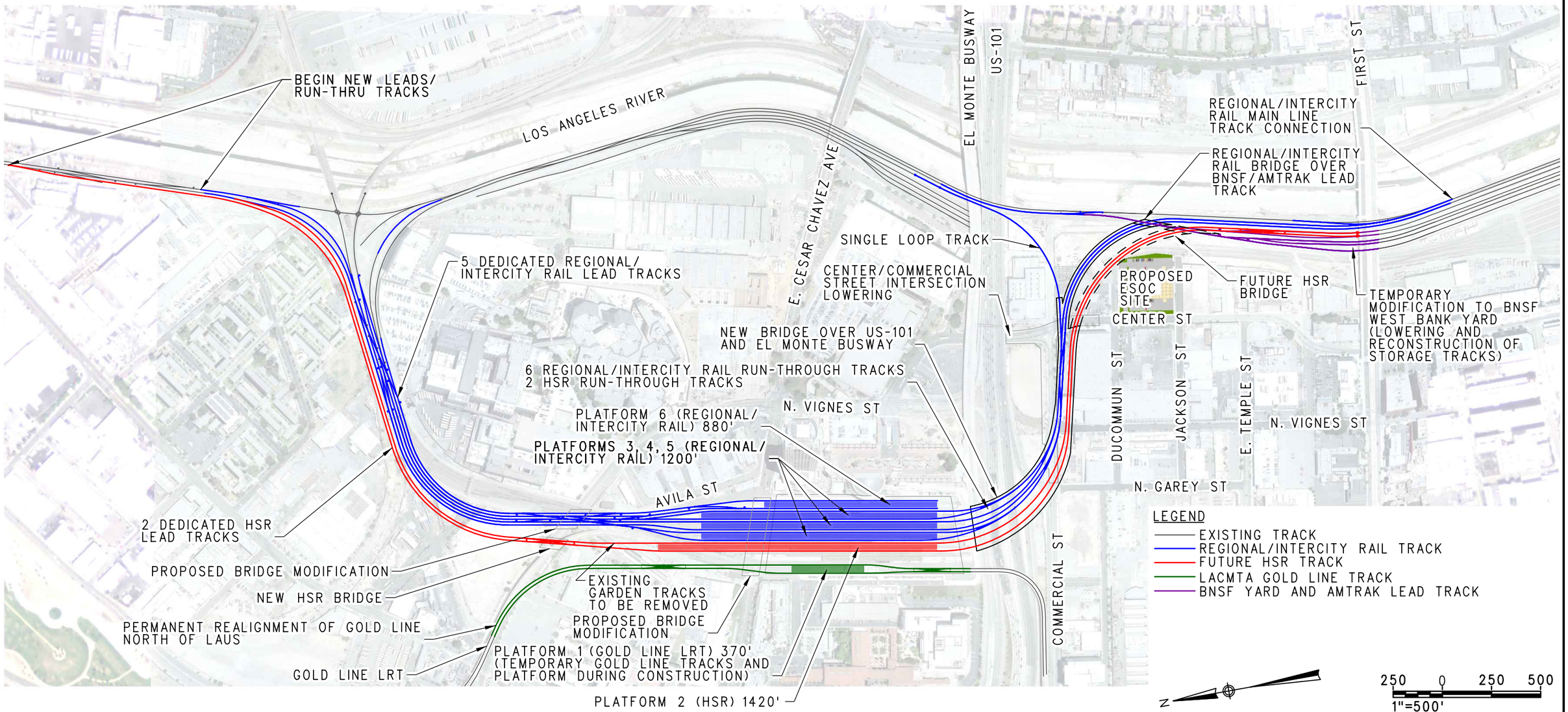

HDR	Metro	LINK UNION STATION TRACK ALIGNMENT ALTERNATIVE 5	SCALE: 1"=500' DATE: 1-19-2023

1/19/2023 11:37:49 AM
c:\pwworking\sac\d1068027\LUS-Exhibit-FW_Alternative 5.dgn
pw:\\pwpgsac01fcalifornia_Sacramento\Documents\Los_Angeles_Metro_Transportation_Auth\SCRIP\13.00_CAD_BIM\13.01_CAD_Data\PRJ_CAD_STD\PLOTDRV\PlotStamp
c:\pwworking\sac\d0803326\LUS-Exhibit-FW-CLR.pltcfg

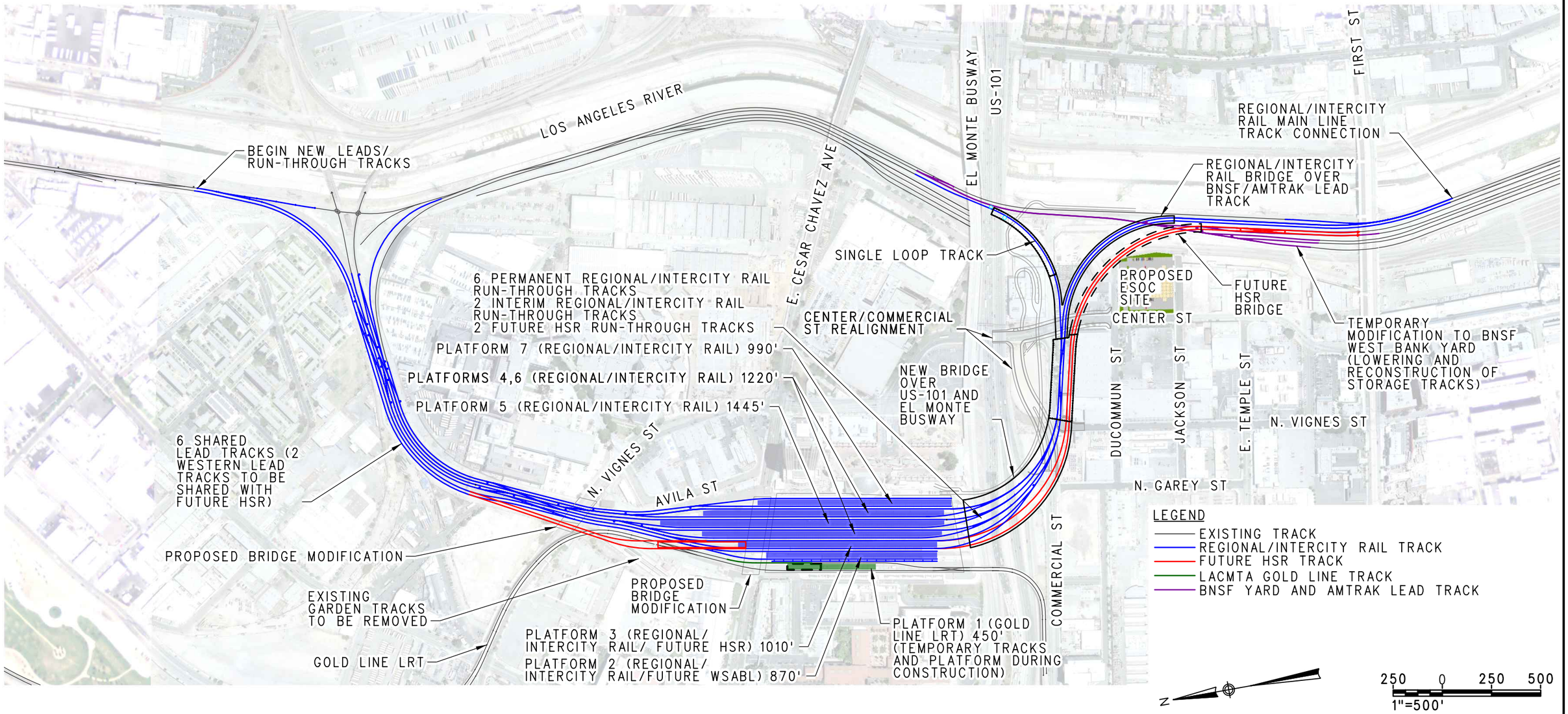

HDR	Metro	LINK UNION STATION TRACK ALIGNMENT ALTERNATIVE 6	SCALE: 1"=500' DATE: 1-19-2023

1/18/2023 3:51:19 PM
c:\pwworking\soc\d0608027\LUS-Exhibit_Track Alternative 6.dgn
pw:\\pwpppsac01fcalifornia_Sacramento\Documents\Los_Angeles_Metro_Transportation_Auth\SCRIP\13.00_CAD_BIM\13.01_CAD_Data\PRJ_CAD_STD\PLOTDRV\PlotStamp
c:\pwworking\soc\d0603326\LUS-Exhibit-FW-CLR.pltcfg

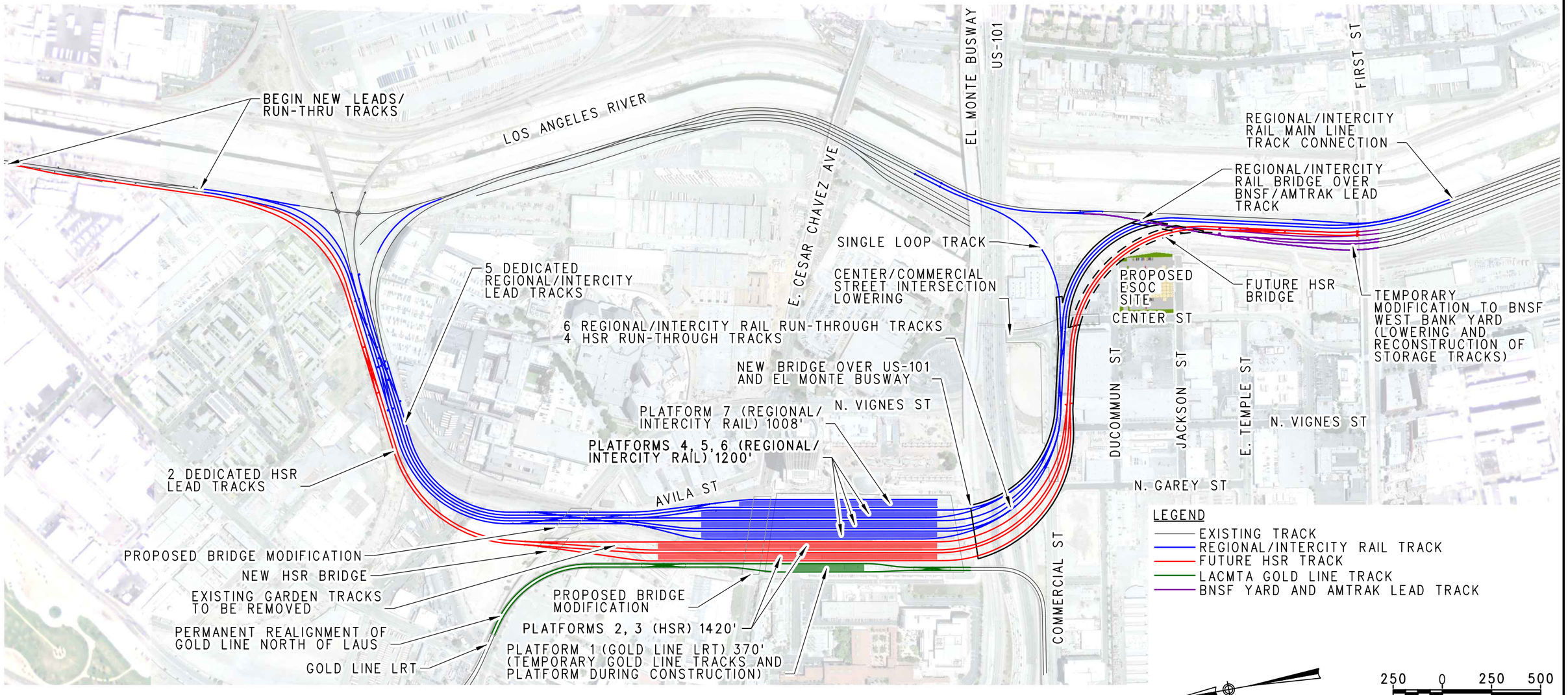

1/18/2023 3:53:27 PM
c:\pwworking\soc\d1068027\LUS-Exhibit_Track Alternative 7.dgn
C:\Users\vmull\Desktop\PlotStamp.tbl
c:\pwworking\soc\d0603326\LUS-Exhibit-FW-CLR.pltcfg

HDR	Metro	LINK UNION STATION TRACK ALIGNMENT ALTERNATIVE 7	SCALE: 1"=500' DATE: 1-19-2023

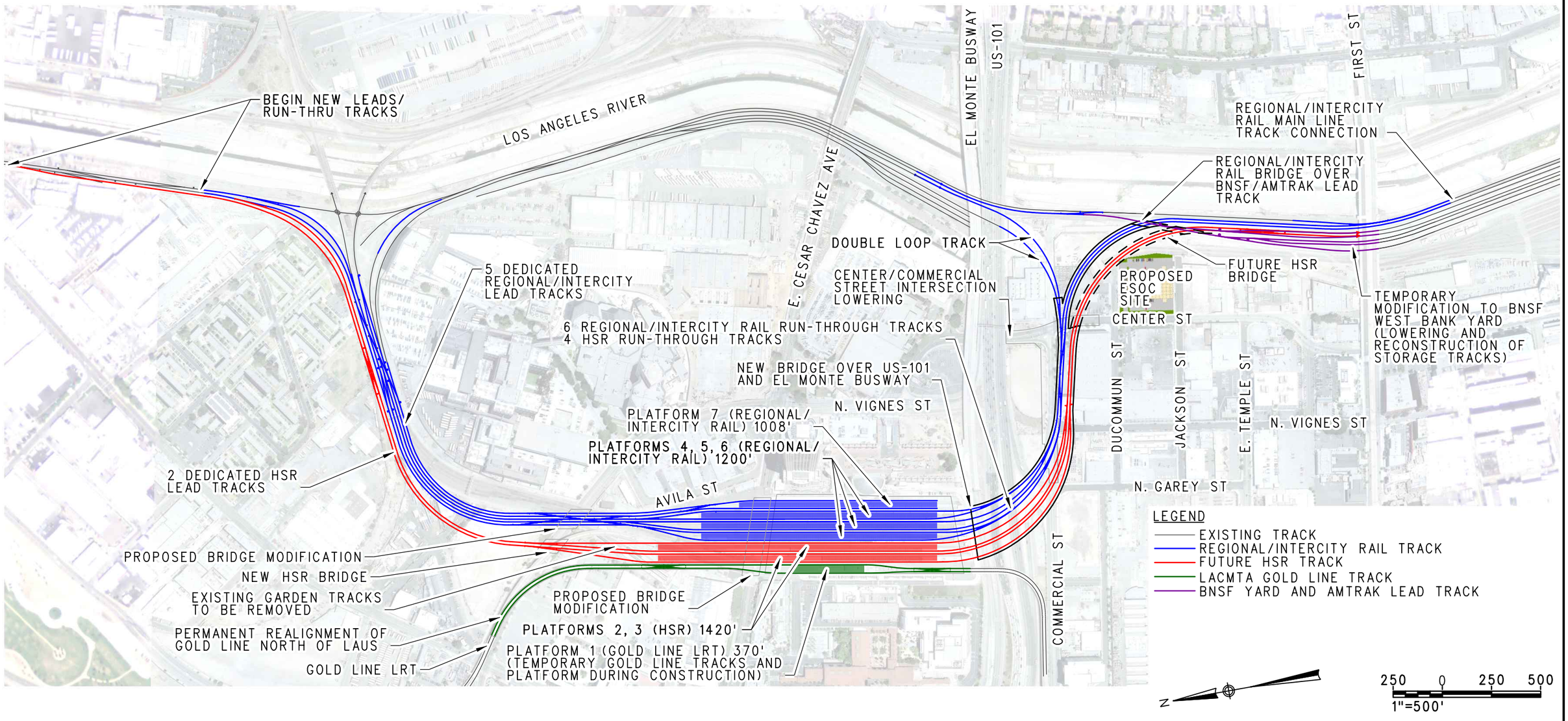

HDR	Metro	LINK UNION STATION TRACK ALIGNMENT ALTERNATIVE 8	SCALE: 1"=500' DATE: 1-19-2023

1/18/2023 3:55:20 PM
c:\pwworking\soc\d0068027\LUS-Exhibit_Track Alternative 8.dgn
C:\Users\amull\Desktop\PlotStamp.tbl
c:\pwworking\soc\d0603326\LUS-Exhibit-FW-CLR.pltcfg

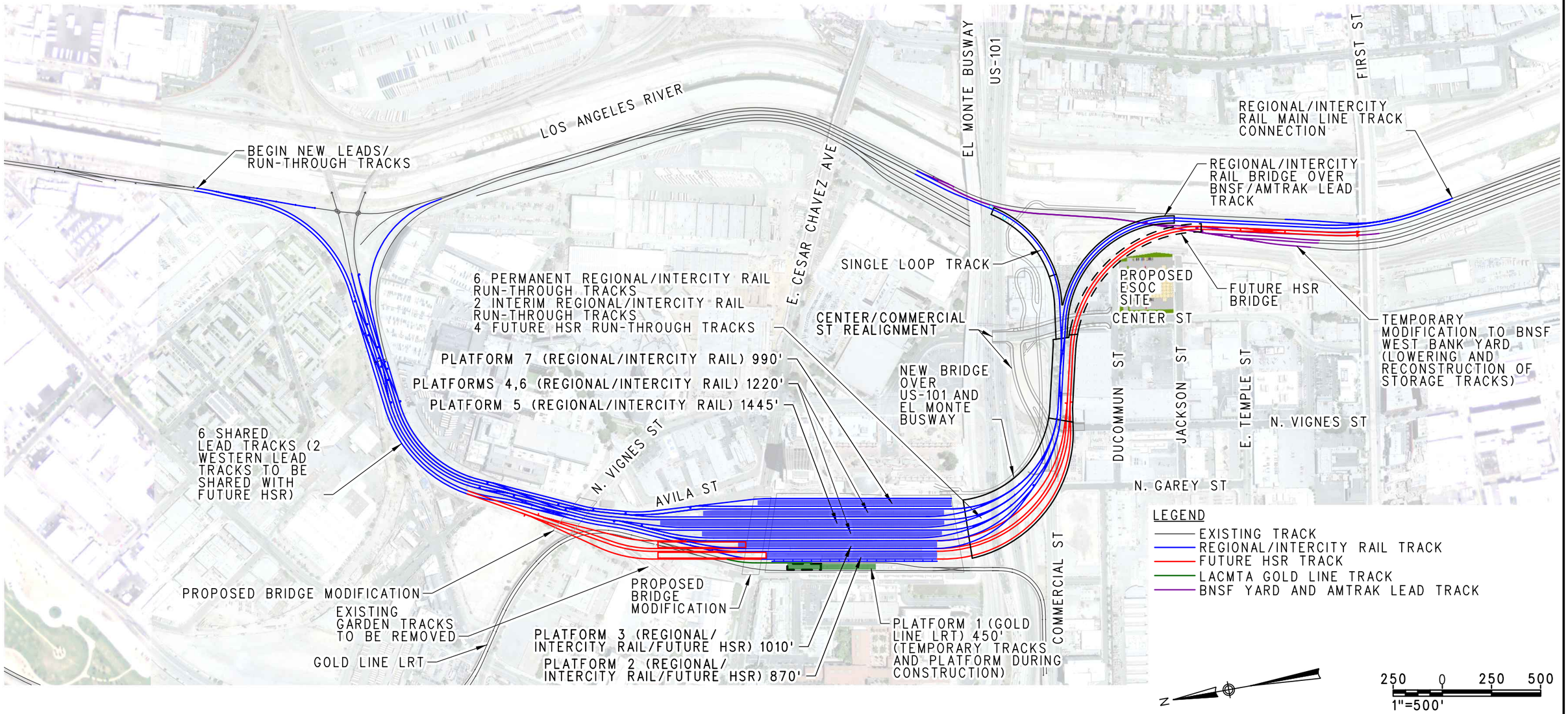

HDR	Metro	LINK UNION STATION TRACK ALIGNMENT ALTERNATIVE 9	SCALE: 1"=500' DATE: 1-19-2023

1/18/2023 3:58:10 PM
c:\pwworking\soc\d0608027\LUS-Exhibit_Track Alternative 9.dgn
C:\Users\amull\Desktop\PlotStamp.tbl
c:\pwworking\soc\d0603326\LUS-Exhibit-FW-CLR.pltcfg

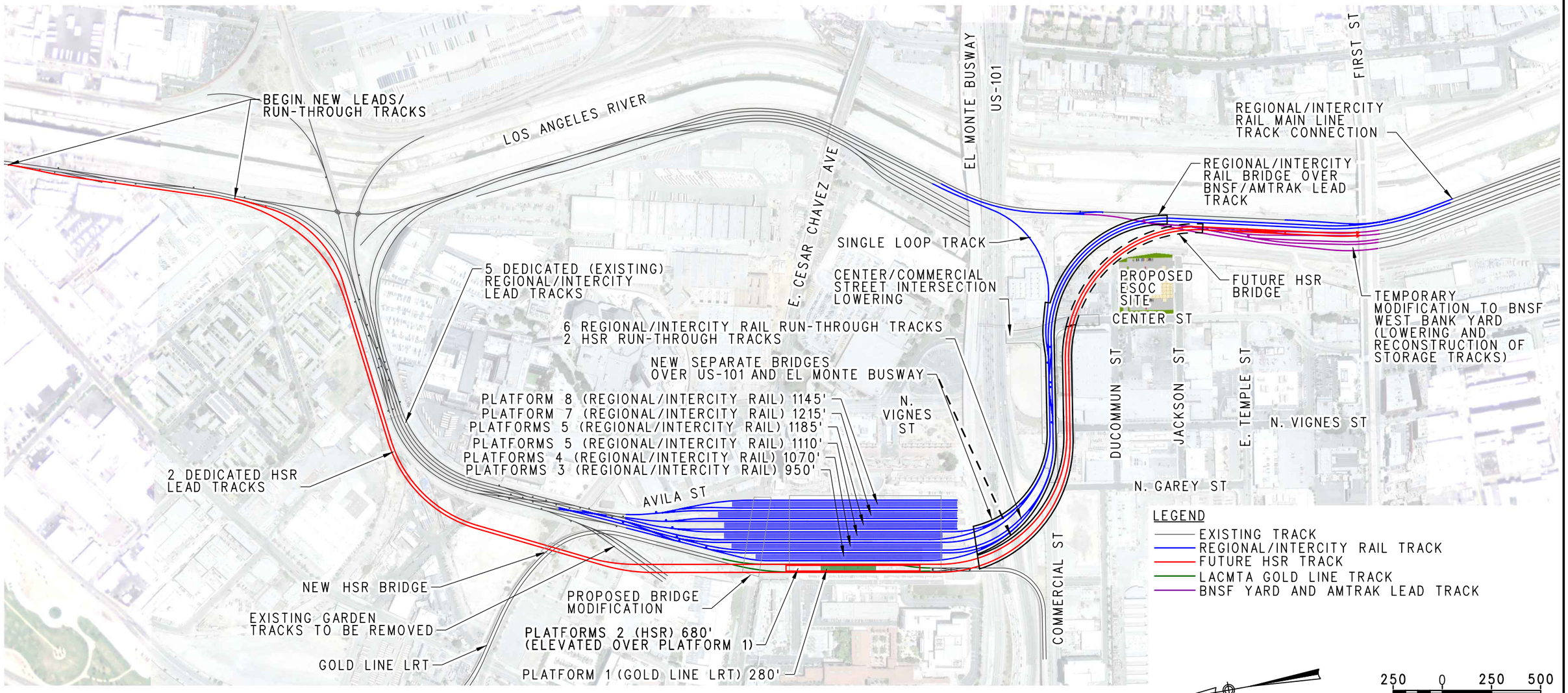

1/18/2023 4:00:36 PM
c:\pwworking\soc\d0686027\LUS-Exhibit_Track Alternative 10.dgn
C:\Users\amull\Desktop\PlotStamp.tbl
c:\pwworking\soc\d0603326\LUS-Exhibit-FW-CLR.pltcfg

HDR	Metro	LINK UNION STATION TRACK ALIGNMENT ALTERNATIVE 10	SCALE: 1"=500' DATE: 1-19-2023

BEGIN NEW LEADS/
RUN-THROUGH TRACKS

LOS ANGELES RIVER

4 DEDICATED
REGIONAL/INTERCITY
LEAD TRACKS

2 DEDICATED HSR
LEAD TRACKS

NEW REGIONAL/INTERCITY
RAIL MAINTENANCE
TRACK CONNECTION

NEW HSR BRIDGE

EXISTING GARDEN TRACKS
TO BE REMOVED

PERMANENT REALIGNMENT OF
GOLD LINE NORTH OF LAUS

GOLD LINE LRT

E. CESAR CHAVEZ AVE

EL MONTE BUSWAY

US-101

SINGLE LOOP TRACK

CENTER/COMMERCIAL
STREET INTERSECTION
LOWERING

6 REGIONAL/INTERCITY RAIL RUN-THROUGH TRACKS
4 HSR RUN-THROUGH TRACKS

NEW SEPARATE BRIDGES
OVER US-101 AND
EL MONTE BUSWAY

PLATFORM 8 (REGIONAL/INTERCITY RAIL) 1165'
PLATFORM 7 (REGIONAL/INTERCITY RAIL) 1350'
PLATFORM 6 (REGIONAL/INTERCITY RAIL) 1400'
PLATFORMS 4, 5 (REGIONAL/INTERCITY RAIL) 1420'

AVILA ST

PROPOSED BRIDGE
MODIFICATION

PLATFORMS 2, 3 (HSR) 1420'

PLATFORM 1 (GOLD LINE LRT) 570'
(TEMPORARY GOLD LINE TRACKS AND
PLATFORM DURING CONSTRUCTION)

PERMANENT
REALIGNMENT OF
GOLD LINE
SOUTH OF LAUS

COMMERCIAL ST

N. VIGNES ST

FIRST ST

REGIONAL/INTERCITY
RAIL MAIN LINE
TRACK CONNECTION

REGIONAL/INTERCITY
RAIL BRIDGE OVER
BNSF/AMTRAK LEAD
TRACK

PROPOSED
ESOC
SITE

FUTURE HSR
BRIDGE

TEMPORARY
MODIFICATION TO BNSF
WEST BANK YARD
(LOWERING AND
RECONSTRUCTION OF
STORAGE TRACKS)

CENTER ST

DUCOMMUN ST

JACKSON ST

E. TEMPLE ST

N. VIGNES ST

N. GAREY ST

LEGEND

- EXISTING TRACK
- REGIONAL/INTERCITY RAIL TRACK
- FUTURE HSR TRACK
- LACMTA GOLD LINE TRACK
- BNSF YARD AND AMTRAK LEAD TRACK

N

250 0 250 500
1"=500'

HDR | Metro

LINK UNION STATION

TRACK ALIGNMENT ALTERNATIVE 11

SCALE: 1"=500'

DATE: 1-19-2023

1/18/2023 4:03:46 PM
c:\pwworking\sac\d1068027\US-Exhibit_Track Alternative 11.dgn
C:\Users\amull\Desktop\PlotStamp.tbl
c:\pwworking\sac\d0603326\US-Exhibit-FW-CLR.pltcfg

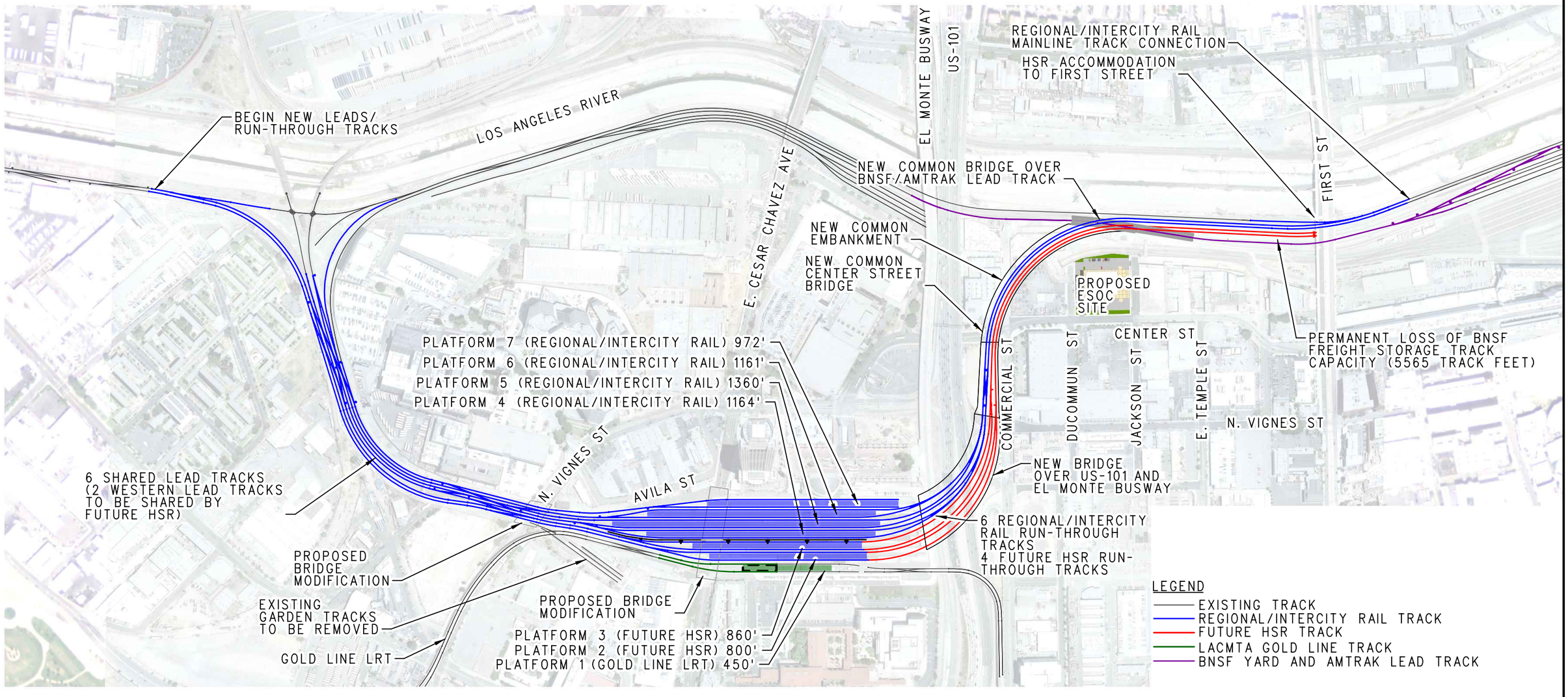

HDR	Metro	LINK UNION STATION TRACK ALIGNMENT ALTERNATIVE 12	SCALE: 1"=500' DATE: 1-19-2023

1/19/2023 11:46:47 AM
o:\workarea\sac\d1068027\LUS-Exhibit_Track Alternative 12.dgn
C:\Users\vmull\Desktop\PlotStamp.tbl
c:\pwworking\sac\d0603326\LUS-Exhibit-FW-CLR.pltcfg

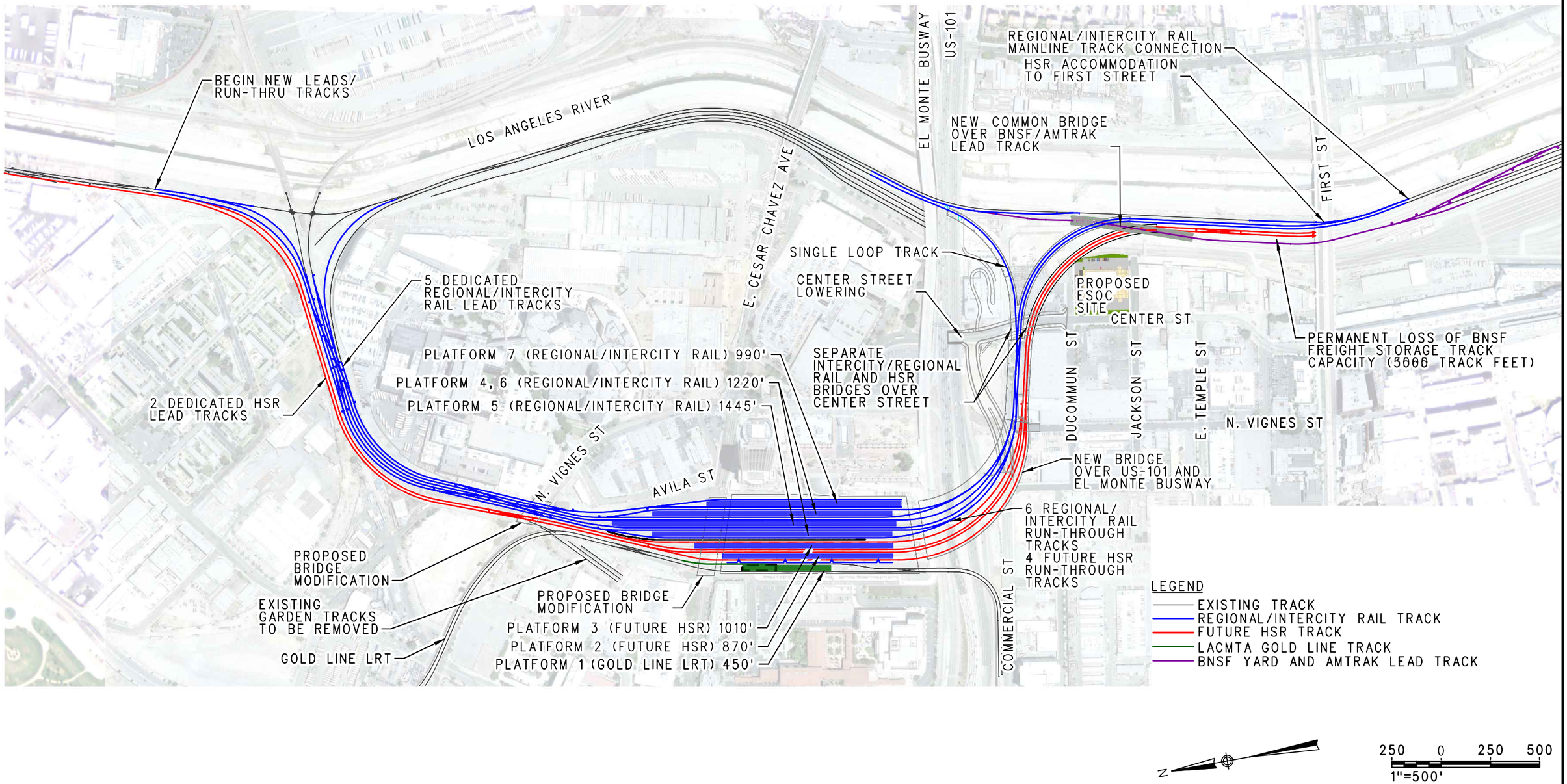

HDR | Metro

LINK UNION STATION

TRACK ALIGNMENT ALTERNATIVE 13

SCALE: 1"=500'

DATE: 1-19-2023

1/19/2023 12:10:02 PM
c:\pwworking\sac\d1068027\LUS-Exhibit_Track Alternative 13.dgn
C:\Users\amull\Desktop\PlotStamp.tbl
c:\pwworking\sac\d0603326\LUS-Exhibit-FW-CLR.pltcfg

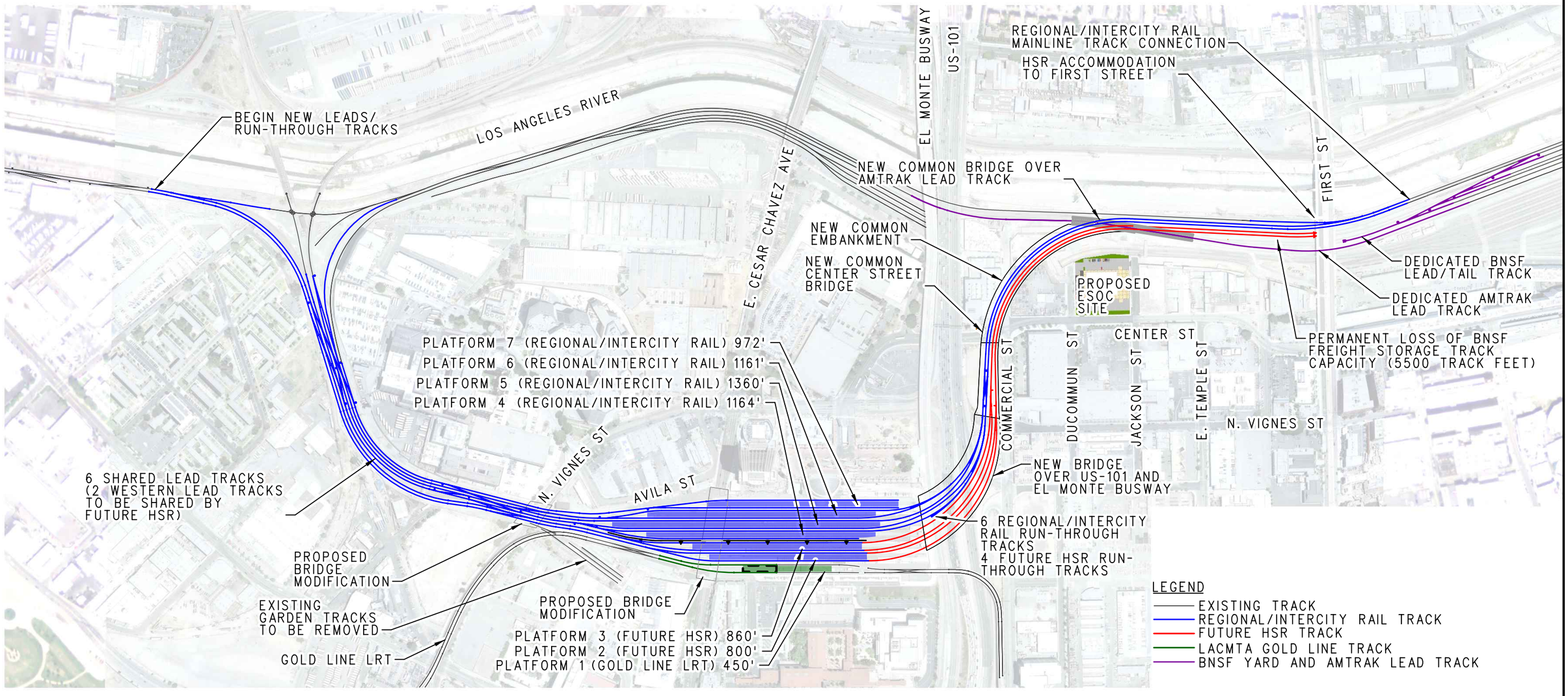

N

250 0 250 500
1"=500'

HDR	Metro	LINK UNION STATION TRACK ALIGNMENT ALTERNATIVE 14	SCALE: 1"=500' DATE: 1-19-2023

1/19/2023 12:07:06 PM
c:\pwworking\soc\d1068027\LUS-Exhibit.dgn Alternative 14.dgn
pw:\\pwapps\soc01\California_Sacramento\Documents\Los_Angeles_Metro_Transportation_Auth\SCRIP\13.00_CAD_BIM\13.01_CAD_Data\PRJ_CAD_STD\PLOTDRV\PlotStamp
c:\pwworking\soc\d0603326\LUS-ExhibitFW-CLR.pltcfg

Attachment B:
Passenger Concourse Concepts Considered

(THIS PAGE INTENTIONALLY LEFT BLANK)

Passenger Concourse Concept 1 - Maintain Passageway Concourse

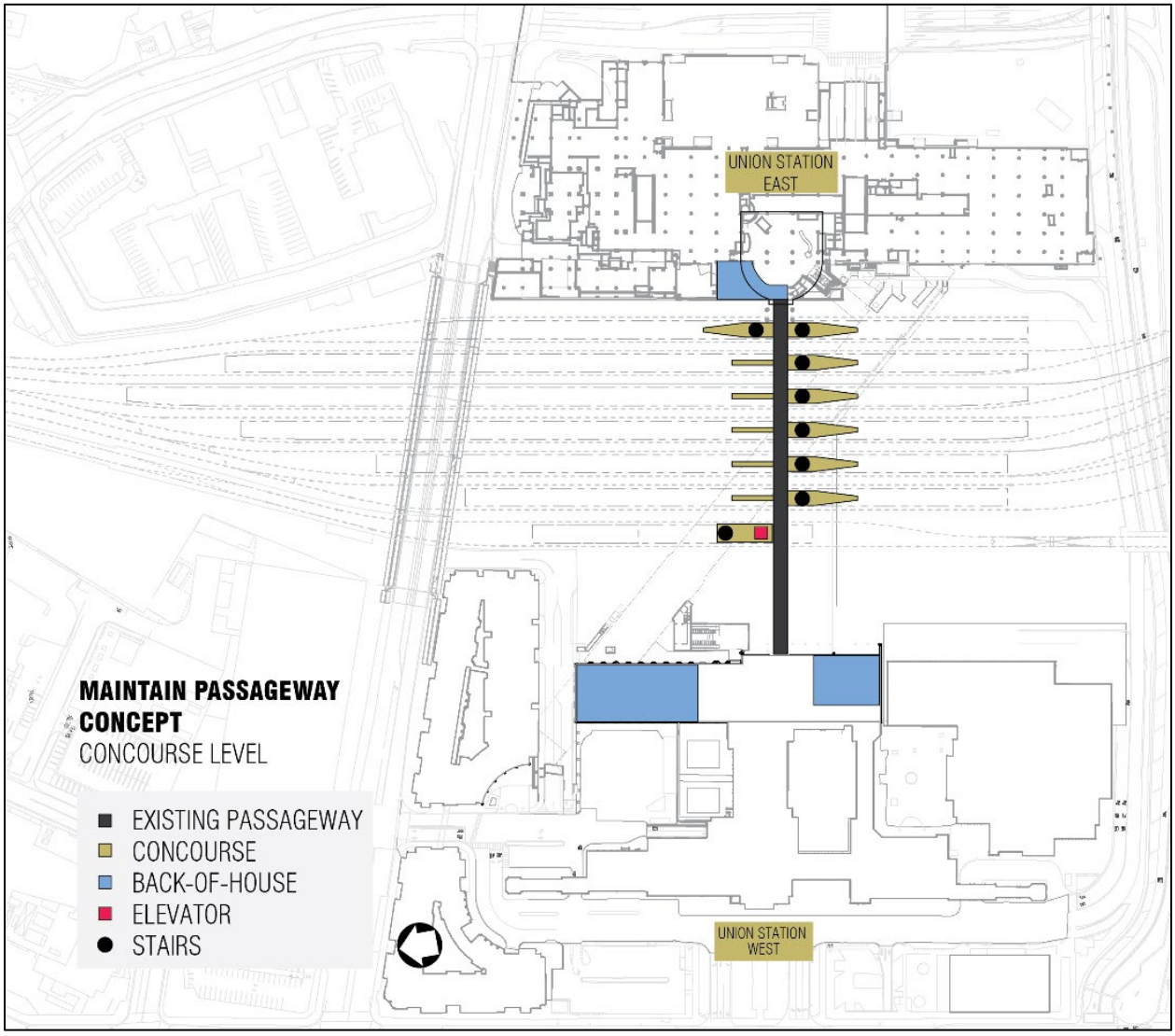

Passenger Concourse Concept 2 - Widened Passageway Concourse

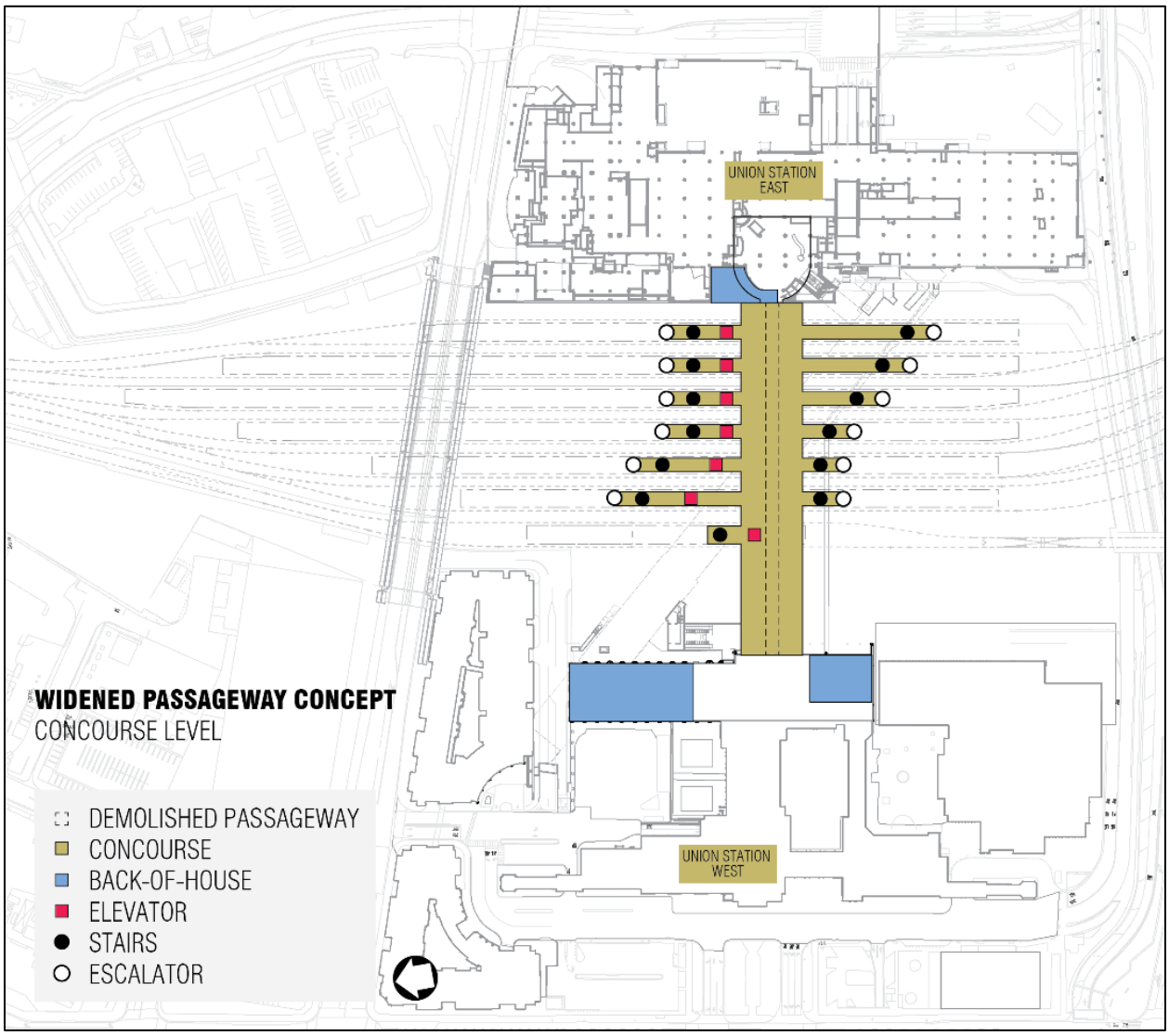

Passenger Concourse Concept 3 - At-Grade Concourse

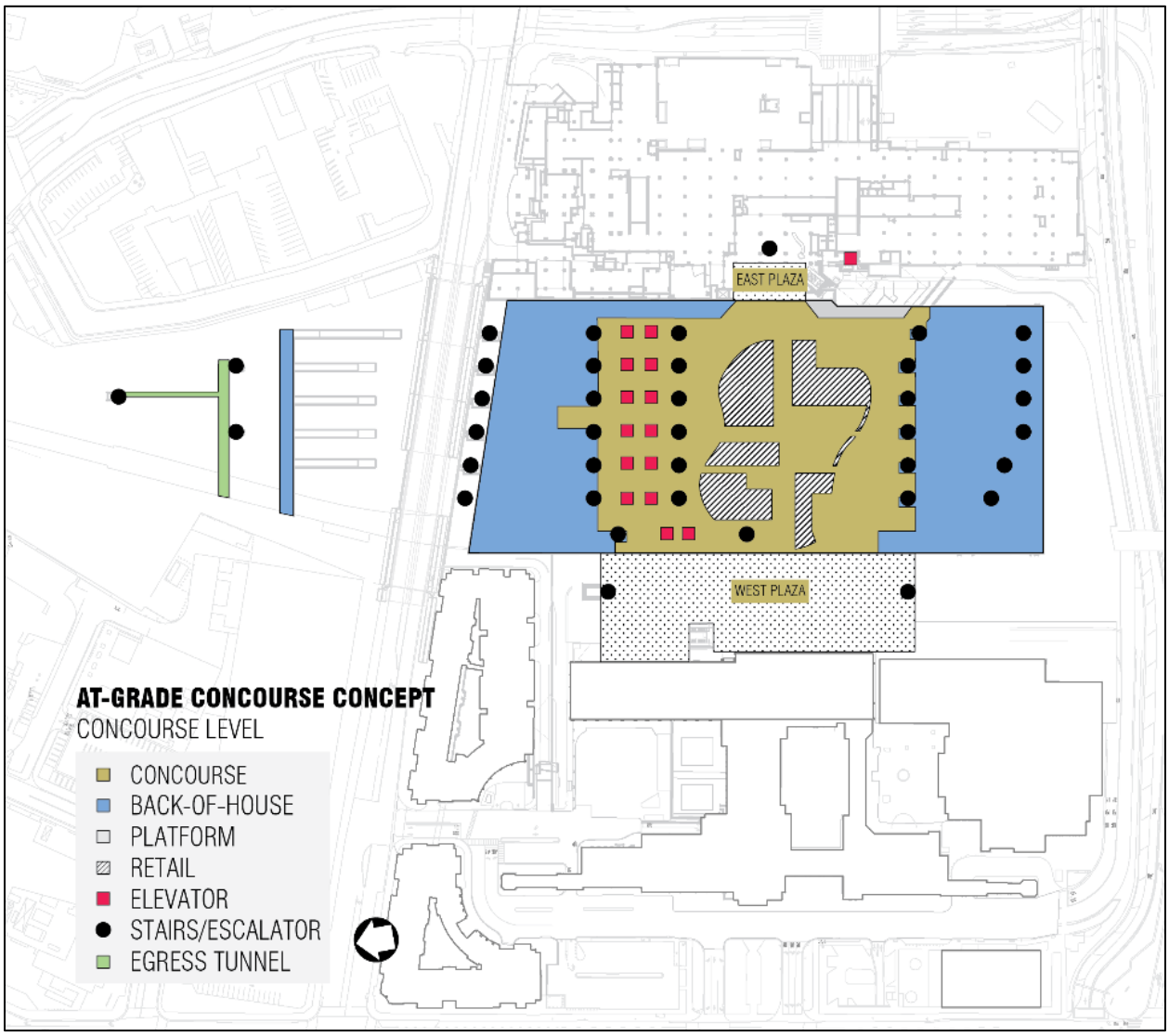

Passenger Concourse Concept 4 - Above-Grade Concourse

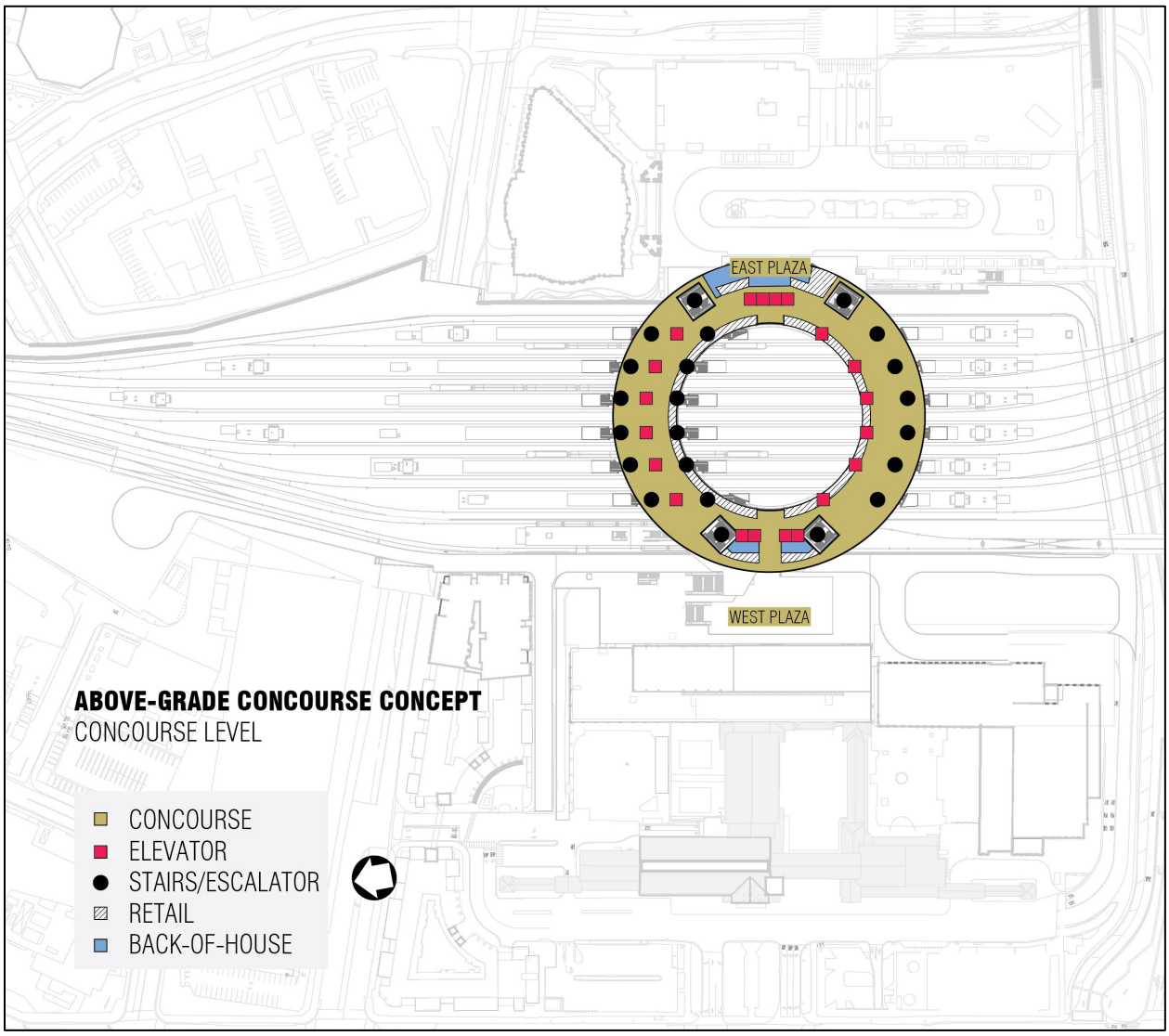

Passenger Concourse Concept 5 - Above-Grade Concourse with New Expanded Passageway (1 of 2)

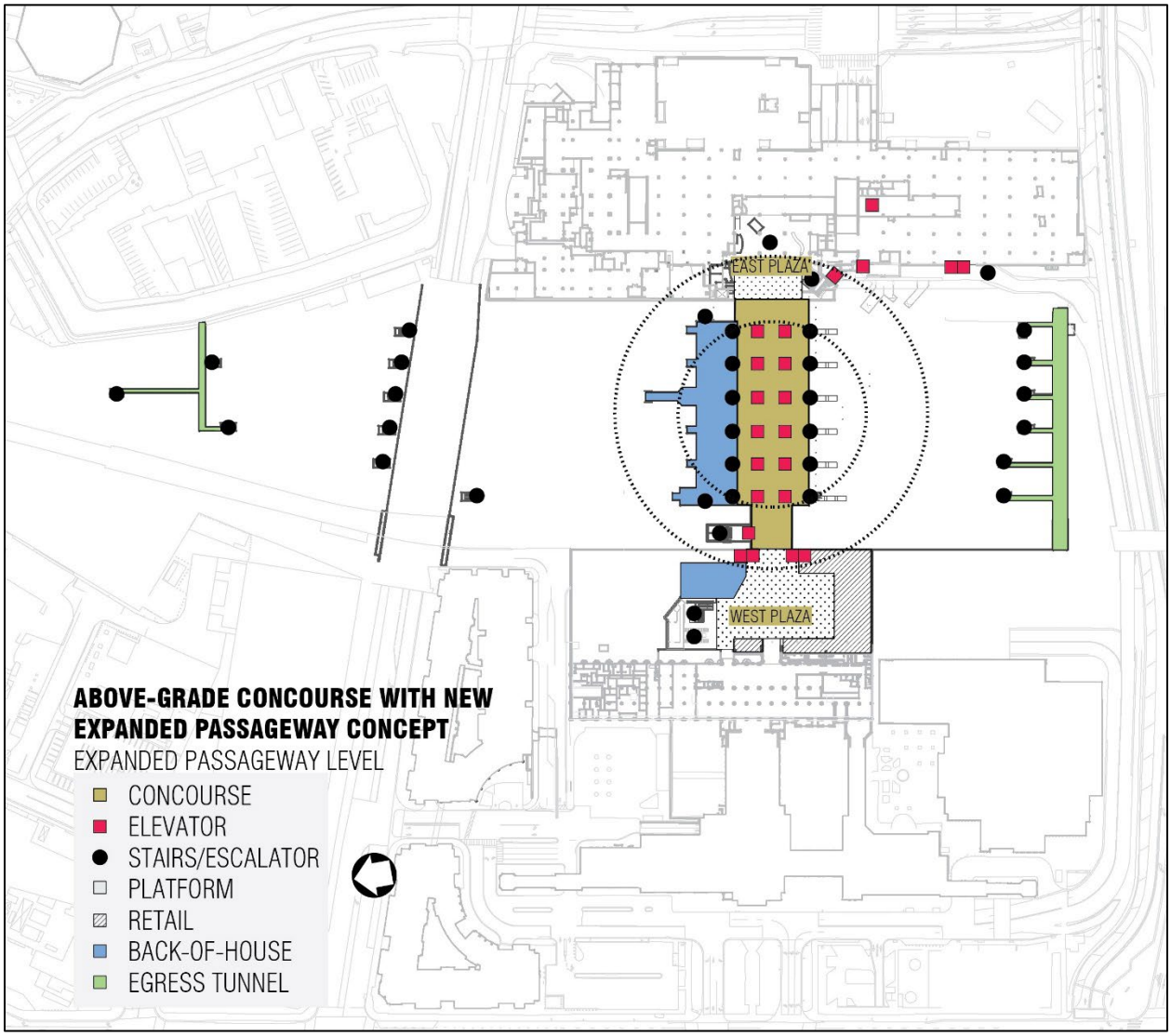

Passenger Concourse Concept 5 - Above-Grade Concourse with New Expanded Passageway (2 of 2)

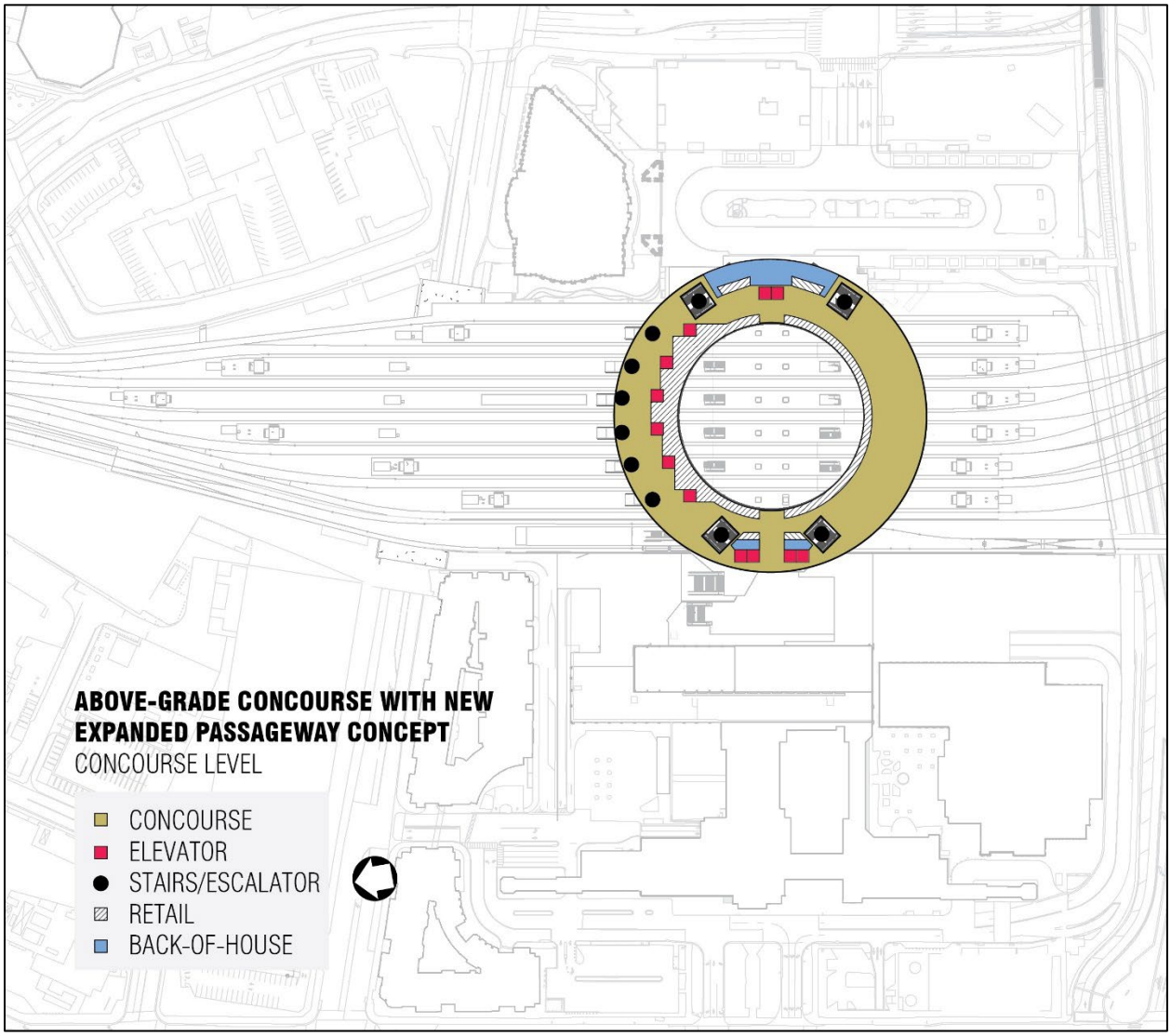

Passenger Concourse Concept 6 - Expanded Passageway

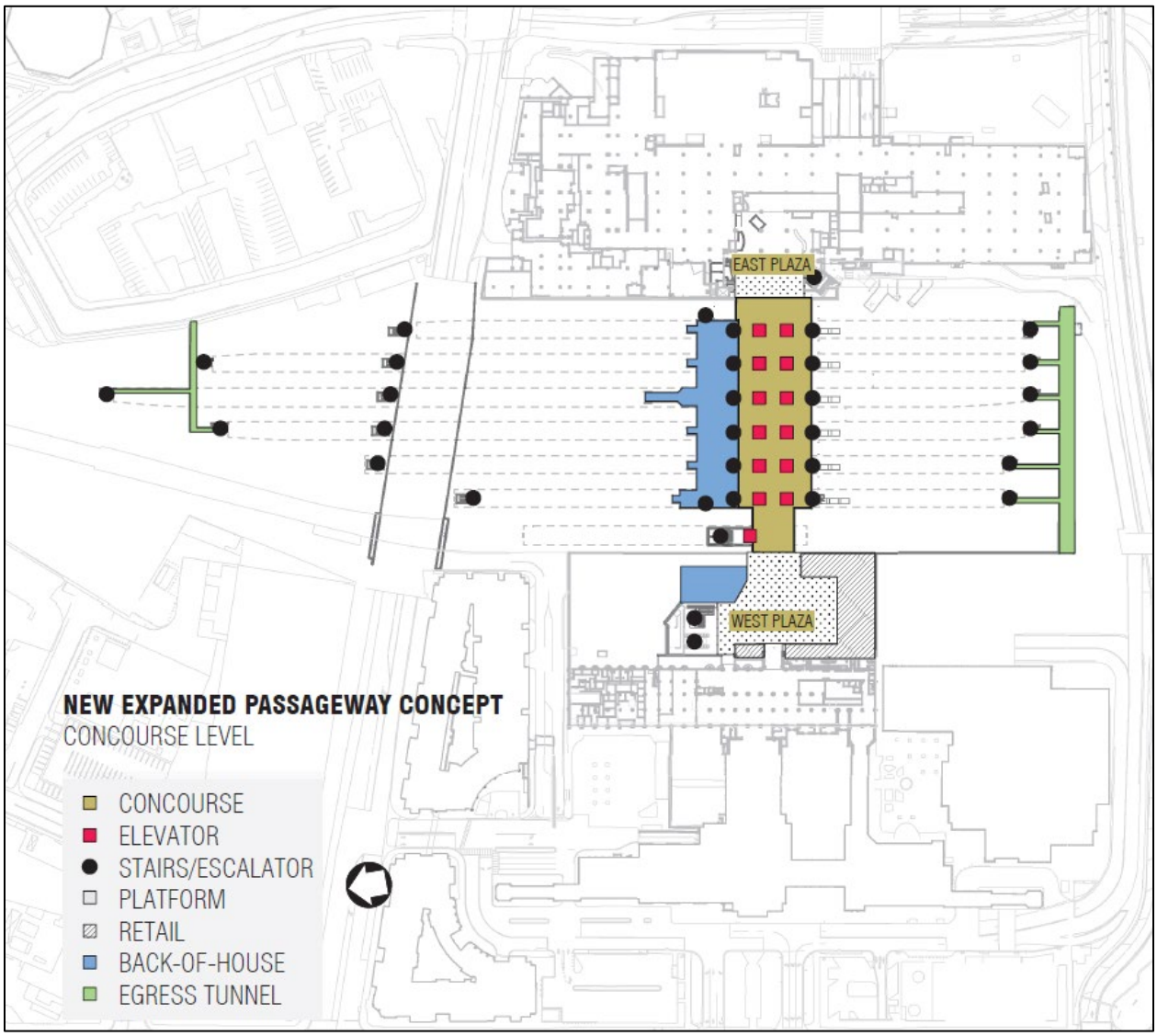

(THIS PAGE INTENTIONALLY LEFT BLANK)

Los Angeles County
Metropolitan Transportation Authority

Link Union Station

Engineering Plans

January 2026

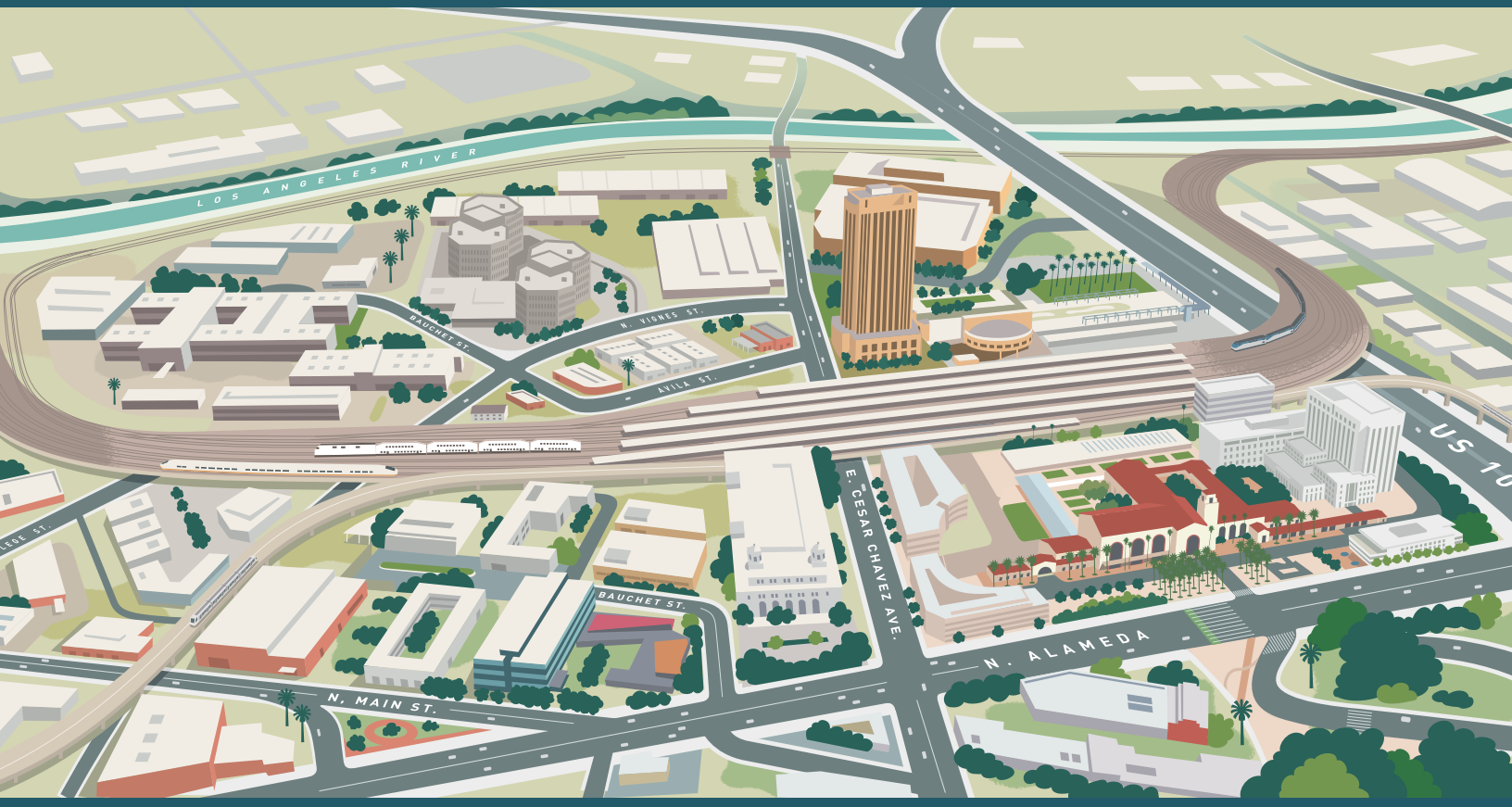

The environmental review, consultation, and other actions required by applicable Federal environmental laws for this project are being, or have been, carried out by the State of California pursuant to 23 U.S.C. 327 and a Memorandum of Understanding dated July 23, 2019, renewed July 22, 2024, and executed by the Federal Railroad Administration and the State of California.

Metro

CALIFORNIA High-Speed Rail Authority

(THIS PAGE INTENTIONALLY LEFT BLANK)

Build Alternative Phase A – Index and Plan Sheets

(THIS PAGE INTENTIONALLY LEFT BLANK)

LINK UNION STATION DRAFT EIS/SEIR BUILD ALTERNATIVE - PHASE A PLAN SHEETS

GENERAL		
SHEET NO.	DRAWING NO.	DRAWING TITLE
1		COVER SHEET
2	SC-020	CONSTRUCTION SCHEMATICS - FINAL CONDITION
TRACK		
SHEET NO.	DRAWING NO.	DRAWING TITLE
3	TS-001	TRACK DRAWINGS - SHEET 1 OF 3 AND DETAILS TRACK TYPICAL SECTIONS
4	TS-002	TRACK DRAWINGS - SHEET 2 OF 3 AND DETAILS TRACK TYPICAL SECTIONS
5	TS-003	TRACK DRAWINGS - SHEET 3 OF 3 AND DETAILS TRACK TYPICAL SECTIONS
6	TR-101	TRACK DRAWINGS - SHEET 1 OF 2 TRACK REMOVAL PLAN
7	TR-102	TRACK DRAWINGS - SHEET 2 OF 2 TRACK REMOVAL PLAN
8	TP-102	TRACK DRAWINGS - RR1 STA 107+04.31 TO RR1 STA 114+00 TRACK PLAN AND PROFILE
9	TP-103	TRACK DRAWINGS - RR1 STA 114+00 TO RR1 STA 123+00 TRACK PLAN AND PROFILE
10	TP-104	TRACK DRAWINGS - RR1 STA 123+00 TO RR1 STA 132+00 TRACK PLAN AND PROFILE
11	TP-105	TRACK DRAWINGS - RR1 STA 132+00 TO RR1 STA 144+00 TRACK PLAN AND PROFILE
12	TP-106	TRACK DRAWINGS - RR1 STA 144+00 TO RR1 147+98.55 TRACK PLAN AND PROFILE
13	TP-107	TRACK DRAWINGS - AMTRAK LEAD STA 19+00 AMTRAK LEAD STA 12+31.13 TO TRACK PLAN AND PROFILE
14	TP-108	TRACK DRAWINGS - AMTRAK LEAD 40+25.14 AMTRAK LEAD 19+00 TO TRACK PROFILE
15	TP-109	TRACK DRAWINGS - AND STORM DRAIN PROTECTION AMTRAK LEAD MODIFICATIONS OFFLINE TEMPORARY SCRRA SHO
16	TL-028	- SHEET 18 OF 18 FINAL CONDITION PHASING PLANS
RIGHT OF WAY		
SHEET NO.	DRAWING NO.	DRAWING TITLE
17	RW-002	RIGHT OF WAY NEEDS - KEY MAP
18	RW-101	RIGHT OF WAY NEEDS - SHEET 1 OF 7 MAP
19	RW-102	RIGHT OF WAY NEEDS - SHEET 2 OF 7 MAP
20	RW-103	RIGHT OF WAY NEEDS - SHEET 3 OF 7 MAP
21	RW-104	RIGHT OF WAY NEEDS - SHEET 4 OF 7 MAP
22	RW-105	RIGHT OF WAY NEEDS - SHEET 5 OF 7 MAP
23	RW-106	RIGHT OF WAY NEEDS - SHEET 6 OF 7 MAP
24	RW-107	RIGHT OF WAY NEEDS - SHEET 7 OF 7 MAP
STRUCTURES		
SHEET NO.	DRAWING NO.	DRAWING TITLE
25	1 OF 14	LAUS VIADUCT OVER US-101 - GENERAL PLAN
26	2 OF 14	LAUS VIADUCT OVER US-101 - GENERAL ELEVATIONS
27	3 OF 14	LAUS VIADUCT OVER US-101 - GENERAL NOTES
28	4 OF 14	LAUS VIADUCT OVER US-101 - GENERAL SECTIONS NO. 1
29	5 OF 14	LAUS VIADUCT OVER US-101 - GENERAL SECTIONS NO. 2
30	6 OF 14	LAUS VIADUCT OVER US-101 - GENERAL SECTIONS NO. 3
31	7 OF 14	LAUS VIADUCT OVER US-101 - GENERAL SECTIONS NO. 4
32	8 OF 14	LAUS VIADUCT OVER US-101 - GENERAL SECTIONS NO. 5
33	9 OF 14	LAUS VIADUCT OVER US-101 - GENERAL SECTIONS NO. 6
34	10 OF 14	LAUS VIADUCT OVER US-101 - GENERAL SECTIONS NO. 7
35	11 OF 14	LAUS VIADUCT OVER US-101 - FOUNDATION DATA
36	12 OF 14	LAUS VIADUCT OVER US-101 - FOUNDATION PLAN
37	13 OF 14	LAUS VIADUCT OVER US-101 - TYPICAL SECTIONS NO. 1
38	14 OF 14	LAUS VIADUCT OVER US-101 - TYPICAL SECTIONS NO. 2
39	S-002	OFFSITE STRUCTURES - KEY MAP
40	SB-201	OFFSITE STRUCTURES - GENERAL PLAN CENTER STREET BRIDGE
41	SB-202	OFFSITE STRUCTURES - TYPICAL SECTION CENTER STREET BRIDGE
42	SB-203	OFFSITE STRUCTURES - FOUNDATION PLAN CENTER STREET BRIDGE
43	SB-301	OFFSITE STRUCTURES - GENERAL PLAN 1 OF 3 BRIDGE OVER AMTRAK LEAD
44	SB-302	OFFSITE STRUCTURES - GENERAL PLAN 2 OF 3 BRIDGE OVER AMTRAK LEAD
45	SB-303	OFFSITE STRUCTURES - GENERAL PLAN 3 OF 3 BRIDGE OVER AMTRAK LEAD
46	SB-304	OFFSITE STRUCTURES - TYPICAL SECTION BRIDGE OVER AMTRAK LEAD
47	SB-305	OFFSITE STRUCTURES - FOUNDATION PLAN 1 OF 2 BRIDGE OVER AMTRAK LEAD
48	SB-306	OFFSITE STRUCTURES - FOUNDATION PLAN 2 OF 2 BRIDGE OVER AMTRAK LEAD

49	SB-101	OFFSITE STRUCTURES - GENERAL PLAN PROTECTION SLAB DUCOMMUN ST STORM DRAIN
50	SW-201	OFF-SITE STRUCTURES - GENERAL PLAN No. 1 RETAINING WALL WILLIAM MEAD HOMES
51	SW-202	OFF-SITE STRUCTURES - GENERAL PLAN No. 2 RETAINING WALL WILLIAM MEAD HOMES
52	SW-203	OFF-SITE STRUCTURES - TYPICAL SECTION RETAINING WALL WILLIAM MEAD HOMES
53	SW-204	OFFSITE STRUCTURES - PLAN LAYOUT RW #1 & #2
54	SW-205	OFFSITE STRUCTURES - TYPICAL SECTION RW #1 & #2
55	SW-206	OFFSITE STRUCTURES - PLAN LAYOUT RW #3 & #4
56	SW-207	OFFSITE STRUCTURES - PLAN LAYOUT RW #4 & #5
57	SW-208	OFFSITE STRUCTURES - TYPICAL SECTION 1 of 2 RW #3 #4 & #5
58	SW-208A	OFFSITE STRUCTURES - TYPICAL SECTION 2 of 2 RW #3 #4 & #5
59	SW-208B	OFFSITE STRUCTURES - ACCESS TUNNEL
60	SW-209	OFFSITE STRUCTURES - PLAN LAYOUT RW #6
61	SW-210	OFFSITE STRUCTURES - TYPICAL SECTION RW #6
62	SW-211	OFFSITE STRUCTURES - PLAN LAYOUT RW #7
63	SW-212	OFFSITE STRUCTURES - PLAN LAYOUT 1 OF 2 RW #8 & #9
64	SW-213	OFFSITE STRUCTURES - PLAN LAYOUT 2 OF 2 RW #8 & #9
65	SW-214	OFFSITE STRUCTURES - TYPICAL SECTION RW #7, #8 & #9

ARCHITECTURE

SHEET NO.	DRAWING NO.	DRAWING TITLE
66	A-300	ARCHITECTURAL DRAWINGS - PLATFORM 4 OVERALL SECTIONS
67	A-350	ARCHITECTURAL DRAWINGS - PLATFORM 4 SECTIONS SHEET 1 OF 4
68	A-351	ARCHITECTURAL DRAWINGS - PLATFORM 4 SECTIONS SHEET 2 OF 4
69	A-352	ARCHITECTURAL DRAWINGS - PLATFORM 4 SECTIONS SHEET 3 OF 4
70	A-353	ARCHITECTURAL DRAWINGS - PLATFORM 4 SECTIONS SHEET 4 OF 4
71	A-410	ARCHITECTURAL DRAWINGS - ENLARGED EGRESS STAIR PLAN AND SECTION
72	A-450	ARCHITECTURAL DRAWINGS - WALL SECTIONS, ROOM FINISH AND DOOR SCHEDULE
73	A-801	ARCHITECTURAL DRAWINGS - ARCHITECTURAL DETAILS
74	AB-100	ARCHITECTURAL DRAWINGS - LAUS VIADUCT OVER US-101 - BRIDGE LEVEL PLAN
75	AB-101	ARCHITECTURAL DRAWINGS - LAUS VIADUCT OVER US-101 - STREET LEVEL PLAN
76	AB-150	ARCHITECTURAL DRAWINGS - LAUS VIADUCT OVER US-101 - STREET LEVEL REFLECTED CEILING PLAN
77	AB-200	ARCHITECTURAL DRAWINGS - LAUS VIADUCT OVER US-101 - ELEVATIONS SHEET 1 OF 2
78	AB-201	ARCHITECTURAL DRAWINGS - LAUS VIADUCT OVER US-101 - ELEVATIONS SHEET 2 OF 2
79	AB-400	ARCHITECTURAL DRAWINGS - LAUS VIADUCT OVER US-101 - VIEWS
80	AB-800	ARCHITECTURAL DRAWINGS - LAUS VIADUCT OVER US-101 - ENLARGED REFLECTED CEILING PLANS AND DETAILS
81	AB-801	ARCHITECTURAL DRAWINGS - LAUS VIADUCT OVER US-101 - DETAILS AND SCHEDULE
82	AX-100	ARCHITECTURAL DRAWINGS - SITE PLAN

CIVIL AND ROADWAY

SHEET NO.	DRAWING NO.	DRAWING TITLE
83	CD-101	EXISTING FACILITIES - REMOVAL AND DISPOSITION PLAN SHEET 1 OF 1
84	CR-101	ON-SITE CIVIL - PLAN
85	CR-201	ON-SITE CIVIL - ACCESS ROAD PROFILE
86	CR-301	ON-SITE CIVIL - CROSS SECTIONS - SHEET 1 OF 2
87	CR-302	ON-SITE CIVIL - CROSS SECTIONS - SHEET 2 OF 2
88	S-301	ON-SITE STRUCTURAL DRAWINGS - RETAINING WALL SECTIONS AT PLATFORM
89	S-302	ON-SITE STRUCTURAL DRAWINGS - RETAINING WALL SECTIONS AT TRACK
90	S-303	ON-SITE STRUCTURAL DRAWINGS - ACCESS TUNNEL SECTION
91	S-352	ON-SITE STRUCTURAL DRAWINGS - PLATFORM SECTION
92	CP-003	ROADWAY IMPROVEMENTS - ROADWAY KEY MAP
93	CD-101	ROADWAY IMPROVEMENTS - CIVIL DEMOLITION PLAN SHEET 1 OF 2
94	CD-102	ROADWAY IMPROVEMENTS - CIVIL DEMOLITION PLAN SHEET 2 OF 2
95	CP-101	ROADWAY IMPROVEMENTS - TYPICAL SECTIONS COMMERCIAL AND CENTER STREETS
96	CP-102	ROADWAY IMPROVEMENTS - SHEET 1 OF 4 PUBLIC ROADWAY PLAN
97	CP-103	ROADWAY IMPROVEMENTS - SHEET 2 OF 4 PUBLIC ROADWAY PLAN
98	CP-104	ROADWAY IMPROVEMENTS - SHEET 3 OF 4 PUBLIC ROADWAY PLAN
99	CP-105	ROADWAY IMPROVEMENTS - SHEET 4 OF 4 PUBLIC ROADWAY PLAN
100	CP-106	ROADWAY IMPROVEMENTS - ACCESS ROAD AND MAINTENANCE ACCESS RAMP CROSS SECTIONS AND ROCK BLANKET
101	CP-107	ROADWAY IMPROVEMENTS - SCRAA MAINTENANCE ACCESS RAMP ACCESS RAMP
102	CP-108	ROADWAY IMPROVEMENTS AMAY'S BAKERY / METRO RED LINE SIGNAL BUNGALOW ACCESS ROAD
103	T-001	SIGNING & STRIPING RESTORATION - ABBREVIATIONS, LEGEND, INDEX OF SHEETS & NOTES

104	T-002	SIGNING & STRIPING RESTORATION - LAYOUT SHEET KEY MAP
105	COVER	PROJECT PLANS FOR CONSTRUCTION ON STATE HIGHWAY
106	X-1	TYPICAL CROSS SECTIONS
107	X-2	TYPICAL CROSS SECTIONS
108	X-3	TYPICAL CROSS SECTIONS
109	X-4	TYPICAL CROSS SECTIONS
110	L-1	LAYOUT
111	L-2	LAYOUT
112	1 OF 14	RETAINING WALL NO. 21 - GENERAL PLAN
113	1.0	NORTH MAIN STREET QUIET ZONE - TITLE SHEET
114	III	NORTH MAIN STREET QUIET ZONE - ABBREVIATIONS & SYMBOLS
115	3.0	NORTH MAIN STREET QUIET ZONE - TYPICAL STREET SECTION
116	4.0	NORTH MAIN STREET QUIET ZONE - STREET IMPROVEMENT PLAN
117	4.1	NORTH MAIN STREET QUIET ZONE - STREET IMPROVEMENT PLAN

UTILITIES

SHEET NO.	DRAWING NO.	DRAWING TITLE
118	CU-100	UTILITIES - KEY MAP
119	CU-101	UTILITIES - SHEET 1 OF 9 COMPOSITE UTILITY PLANS
120	CU-102	UTILITIES - SHEET 2 OF 9 COMPOSITE UTILITY PLANS
121	CU-103	COMPOSITE UTILITY PLANS - SHEET 3 OF 9
122	CU-104	UTILITIES - SHEET 4 OF 9 COMPOSITE UTILITY PLANS
123	CU-105	UTILITIES - SHEET 5 OF 9 COMPOSITE UTILITY PLANS
124	CU-106	UTILITIES - SHEET 6 OF 9 COMPOSITE UTILITY PLANS
125	CU-107	UTILITIES - SHEET 7 OF 9 COMPOSITE UTILITY PLANS
126	CU-108	UTILITIES - SHEET 8 OF 9 COMPOSITE UTILITY PLANS
127	CU-109	UTILITIES - SHEET 9 OF 9 COMPOSITE UTILITY PLANS
128	CU-304	UTILITIES - SUMMARY TABLE PROP SCRRA TRENCH
129	CU-305	UTILITIES - SUMMARY TABLE PROP CALTRANS TRENCH
130	CU-306	UTILITIES - SUMMARY TABLE PROP CITY OF LOS ANGELES TRENCH
131	CU-307	UTILITIES - SUMMARY TABLE PROP BNSF TRENCH
132	CU-308	UTILITIES - SUMMARY TABLE PROP METRO AND MWD TRENCH
133	CU-201	UTILITIES - SHEET 1 OF 9 UTILITY RELOCATION PLANS
134	CU-202	UTILITIES - SHEET 2 OF 9 UTILITY RELOCATION PLANS
135	CU-203	UTILITY RELOCATION PLANS - SHEET 3 OF 9
136	CU-204	UTILITIES - SHEET 4 OF 9 UTILITY RELOCATION PLANS
137	CU-205	UTILITIES - SHEET 5 OF 9 UTILITY RELOCATION PLANS
138	CU-206	UTILITIES - SHEET 6 OF 9 UTILITY RELOCATION PLANS
139	CU-207	UTILITIES - SHEET 7 OF 9 UTILITY RELOCATION PLANS
140	CU-208	UTILITIES - UTILITY RELOCATION PLANS SHEET 8 OF 9
141	CU-209	UTILITIES - SHEET 9 OF 9 UTILITY RELOCATION PLANS
142	CU-301	UTILITIES - TRENCH SUMMARY TABLE
143	CU-302	UTILITIES - EXISTING UTILITY CONFLICT MATRIX
144	CU-303	UTILITIES - ONSITE UTILITIES - TABLE

DRAINAGE

SHEET NO.	DRAWING NO.	DRAWING TITLE
145	CG-002	DRAINAGE AND GRADING PLANS - KEY MAP
146	CG-101	DRAINAGE AND GRADING PLANS - SHEET 1 0F 11
147	CG-102	DRAINAGE AND GRADING PLANS - SHEET 2 0F 11
148	CG-103	DRAINAGE AND GRADING PLANS - SHEET 3 0F 11
149	CG-104	DRAINAGE AND GRADING PLANS - SHEET 4 0F 11
150	CG-105	DRAINAGE AND GRADING PLANS - SHEET 5 0F 11
151	CG-106	DRAINAGE AND GRADING PLANS - SHEET 6 0F 11
152	CG-107	DRAINAGE AND GRADING PLANS - SHEET 7 OF 11
153	CG-108	DRAINAGE AND GRADING PLANS - SHEET 8 0F 11
154	CG-109	DRAINAGE AND GRADING PLANS - SHEET 9 0F 11
155	CG-110	DRAINAGE AND GRADING PLANS - SHEET 10 0F 11
156	CG-111	DRAINAGE AND GRADING PLANS - SHEET 11 0F 11

LINK UNION STATION PROJECT

CONTRACT NUMBER PS2415-3172

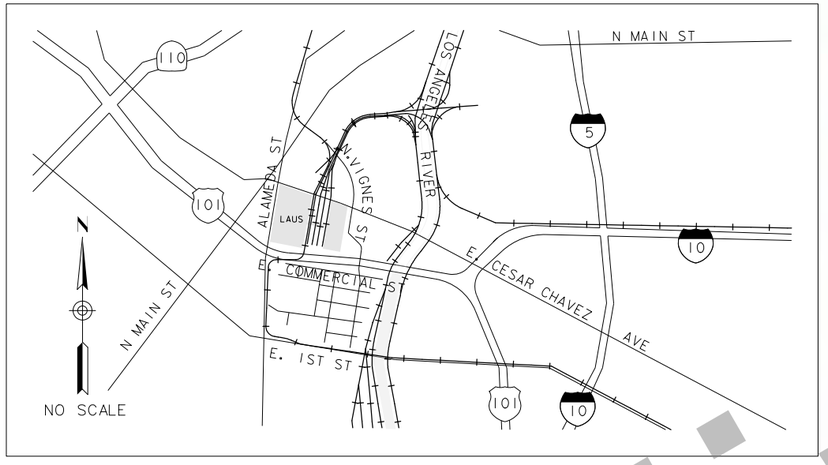

LOCATION MAP



Preliminary

Metro

Original plan submittal made in Aug. 2019

Rev No.	Date	Description
1	3/21	
2	12/21	
3	6/22	Updated Submittal Date

35% DESIGN PLANS
NOT FOR CONSTRUCTION
JUNE 1, 2022

LOS ANGELES COUNTY METROPOLITAN TRANSPORTATION AUTHORITY

HDR

3/1/2022 7:56:42 AM USER = KWARFIEL
c:\pwworking\sac\d1056610\LUS-AIGI001_Update.dgn
C:\Users\kwarfiel\Documents\Temp_LinkUS\PlotStamp.tbl
c:\pwworking\sac\d0603326\SCRIP-11X17bw_pdf.pltcfg

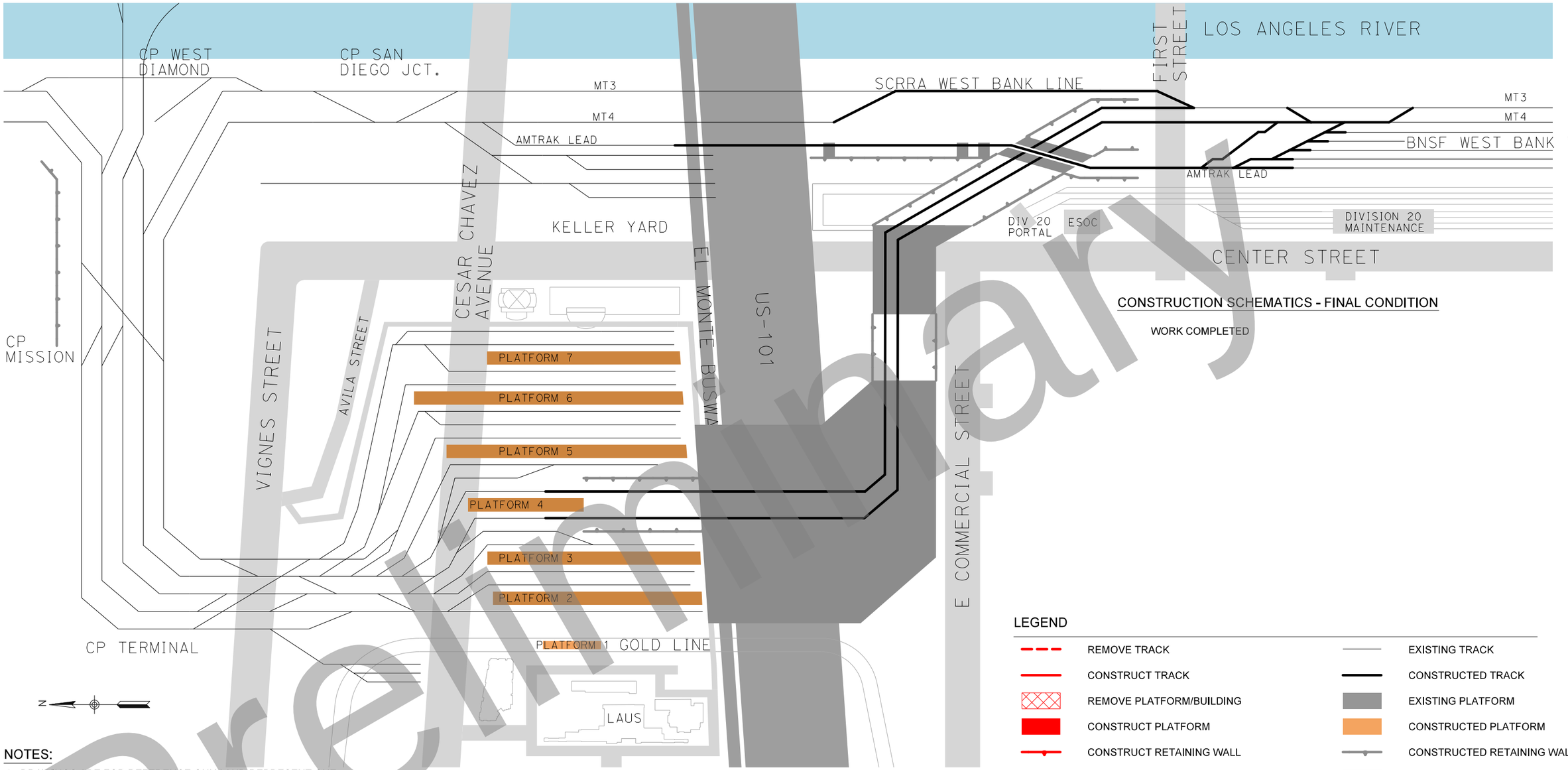

CONSTRUCTION SCHEMATICS - FINAL CONDITION

WORK COMPLETED

LEGEND

REMOVE TRACK	EXISTING TRACK
CONSTRUCT TRACK	CONSTRUCTED TRACK
REMOVE PLATFORM/BUILDING	EXISTING PLATFORM
CONSTRUCT PLATFORM	CONSTRUCTED PLATFORM
CONSTRUCT RETAINING WALL	CONSTRUCTED RETAINING WALL
CONSTRUCT BRIDGE SUBSTRUCTURE	CONSTRUCTED BRIDGE
CONSTRUCT BRIDGE SUPERSTRUCTURE	CONSTRUCTED PROTECTION SLAB
CONSTRUCT PROTECTION SLAB	CONSTRUCTED ACCESS ROAD
REMOVE ACCESS ROAD	
CONSTRUCT ACCESS ROAD	
HIGHWAY MODIFICATIONS	

35% DESIGN PLANS
NOT FOR CONSTRUCTION

NOTES:

1. DRAWINGS ARE FOR REFERENCE ONLY AND REPRESENT ONE HIGH-LEVEL FEASIBLE CONSTRUCTION SEQUENCE FOR THE PROJECT
2. ADDITIONAL WORK TO BE PERFORMED IN THE THROAT AREA BY OTHERS NOT INCLUDED IN THESE DRAWINGS
3. FOR DETAILED US-101 CONSTRUCTION STAGING SEE CALTRANS PROJECT REPORT
4. EXISTING CONDITION REFLECTS IMPROVEMENTS MADE AS PART OF THE UNION STATION MODERNIZATION PROJECT

Original plan submittal made in Aug. 2019

Preliminary

THE PREPARATION OF THIS DRAWING HAS BEEN FINANCED IN PART THROUGH A GRANT FROM THE U.S. DEPARTMENT OF TRANSPORTATION, FEDERAL TRANSIT ADMINISTRATION (FTA), UNDER THE FEDERAL TRANSIT ACT OF 1964, AS AMENDED, AND IN PART BY THE TAXES OF THE CITIZENS OF LOS ANGELES COUNTY AND OF THE STATE OF CALIFORNIA.

Rev No.	Date	Description
1	3/21	Format revised for legibility
2	12/21	
3	6/22	Format revised for legibility

DESIGNED BY A. MULL
DRAWN BY M. SHAHIN
CHECKED BY M. EVANS
IN CHARGE T. KIM
DATE 6/01/2022

REGISTERED PROFESSIONAL ENGINEER — No. ____ Exp. ____ CIVIL — STATE OF CALIFORNIA

Metro

LOS ANGELES COUNTY METROPOLITAN TRANSPORTATION AUTHORITY

HDR

HDR ENGINEERING
350 S. GRAND AVENUE
SUITE 2900
LOS ANGELES, CA 90071
(213) 239-5800

SUBMITTED: _____ PROJECT MANAGER

APPROVED: _____

LINK UNION STATION PROJECT

CONSTRUCTION SCHEMATICS

FINAL CONDITION

CONTRACT NO

DRAWING NO SC-020 REV

SCALE NO SCALE

SHEET NO 2

Plot Driver=$PLTDRV$$ Pentable=PlotStamp.tbl USER = BHOEGER 2:19:43 PM 3/3/2022 $FILE$

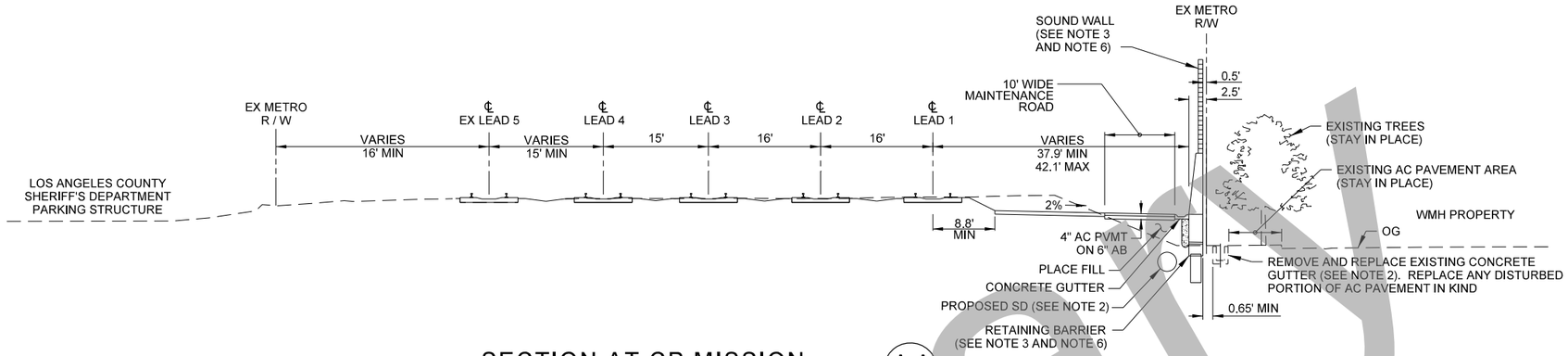

SECTION AT CP MISSION (A-A)

NO SCALE

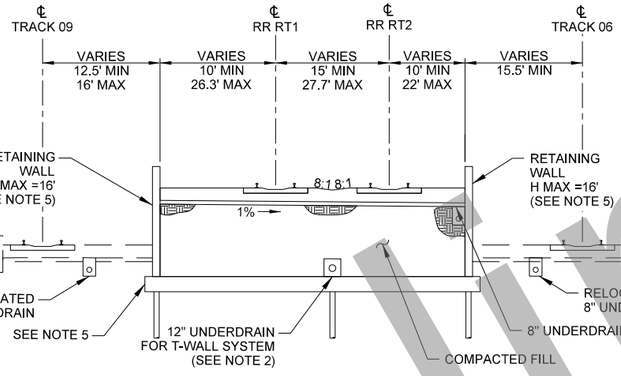

LOS ANGELES UNION STATION PLATFORM 4 TRACK RAMP (B-B)

NO SCALE

APPROX. RR RT1 108+25 TO 112+00.00

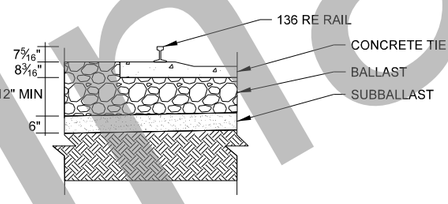

DETAIL 1-ROADBED SECTION DETAIL FOR MAINLINE & YARD TRACK

NO SCALE

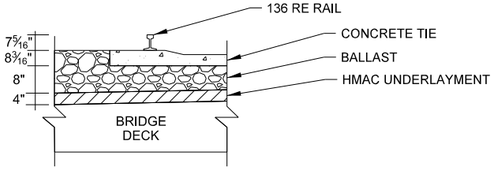

DETAIL 2-ROADBED SECTION DETAIL FOR BRIDGES

NO SCALE

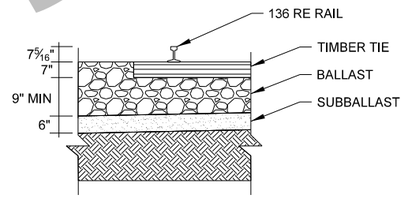

DETAIL 3-ROADBED SECTION DETAIL FOR AMTRAK LEAD

NO SCALE

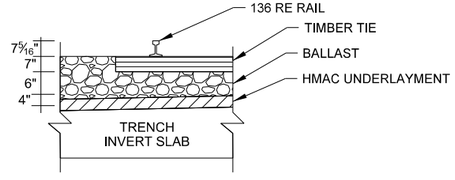

DETAIL 4-TRENCH SECTION DETAIL FOR AMTRAK LEAD

NO SCALE

NOTES:

1. SEE UTILITY PLANS FOR EXISTING AND PROPOSED UTILITIES
2. SEE DRAINAGE PLANS FOR DRAINAGE RELATED WORK
3. SEE STRUCTURES PLANS FOR BRIDGE, RETAINING WALL, AND PROTECTION SLAB WORK
4. SEE ROADWAY PLANS FOR ROADWAY RELATED WORK
5. SEE ON-SITE STRUCTURAL PLANS FOR ON-SITE STRUCTURAL RELATED WORK
6. CONTRACTOR TO CONSTRUCT NEW SOUND WALL AND RETAINING BARRIER FROM THE RAIL SIDE OF THE EXISTING METRO R/W

Original plan submittal made in Aug. 2019

35% DESIGN PLANS
NOT FOR CONSTRUCTION

THE PREPARATION OF THIS DRAWING HAS BEEN FINANCED IN PART THROUGH A GRANT FROM THE U.S. DEPARTMENT OF TRANSPORTATION, FEDERAL TRANSIT ADMINISTRATION (FTA), UNDER THE FEDERAL TRANSIT ACT OF 1964, AS AMENDED, AND IN PART BY THE TAXES OF THE CITIZENS OF LOS ANGELES COUNTY AND OF THE STATE OF CALIFORNIA.

Rev No.	Date	Description
1	3/21	Additional roadbed sections for Amtrak lead included
2	12/21	
3	6/22	

DESIGNED BY Z. MACDONELL
DRAWN BY M. SHAHIN
CHECKED BY A. MULL
IN CHARGE T. KIM
DATE 3/05/2021

REGISTERED PROFESSIONAL ENGINEER — No. — Exp. — CIVIL — STATE OF CALIFORNIA

Metro
LOS ANGELES COUNTY
METROPOLITAN TRANSPORTATION AUTHORITY

HDR ENGINEERING
350 S. GRAND AVENUE
SUITE 2900
LOS ANGELES, CA 90071
(213) 239-5800

SUBMITTED: _____ PROJECT MANAGER
APPROVED: _____

LINK UNION STATION PROJECT

TRACK DRAWINGS
TRACK TYPICAL SECTIONS AND DETAILS
SHEET 1 OF 3

CONTRACT NO
DRAWING NO TS-001
REV
SCALE NO SCALE
SHEET NO 3

Preliminary

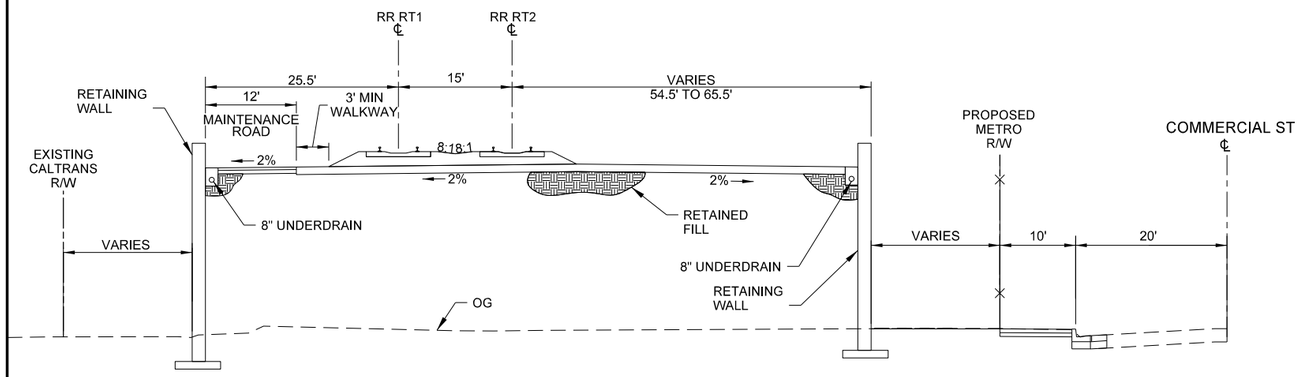

2-TRACK REGIONAL RAIL RETAINED FILL-SECTION C-C

NO SCALE

* HEIGHT OF RETAINING WALL AND SLOPE VARIES AS MAINTENANCE RAMP ELEVATION VARIES. REFER TO ROADWAY PLANS AND SECTIONS FOR MORE DETAIL.

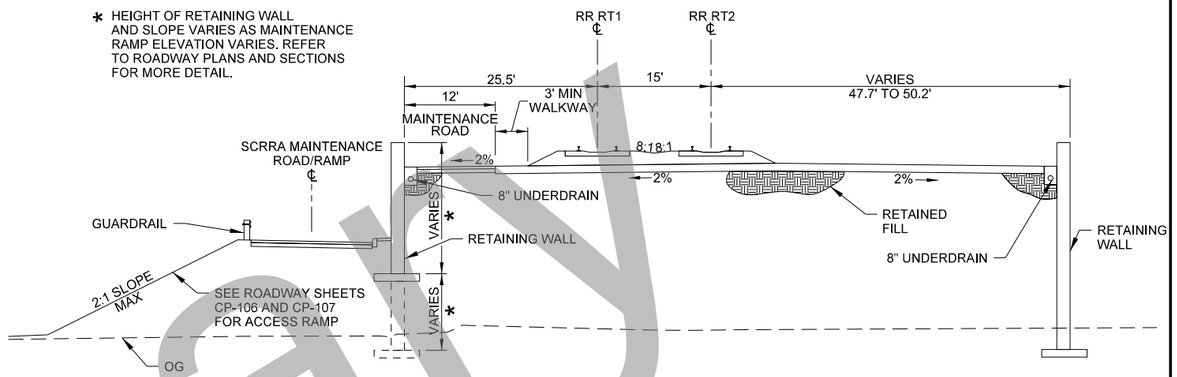

RETAINED FILL-SECTION WITH ACCESS ROAD D-D

NO SCALE

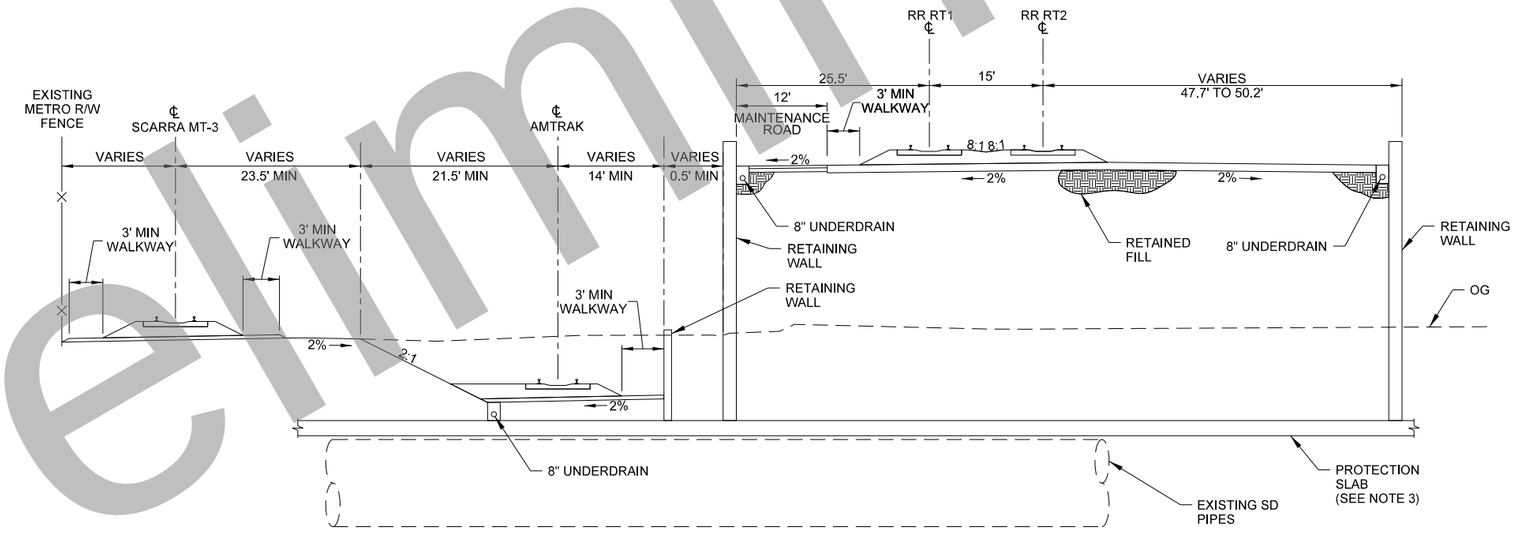

WEST BANK YARD ALONG LA RIVER E-E

NO SCALE

NOTES:

1. SEE UTILITY PLANS FOR EXISTING AND PROPOSED UTILITIES
2. SEE DRAINAGE PLANS FOR DRAINAGE RELATED WORK
3. SEE STRUCTURES PLANS FOR BRIDGE AND RETAINING WALL WORK UNLESS SPECIFIED HEREIN
4. SEE ROADWAY PLANS FOR ROADWAY RELATED WORK

Preliminary

35% DESIGN PLANS
NOT FOR CONSTRUCTION

Original plan submittal made in Aug. 2019

THE PREPARATION OF THIS DRAWING HAS BEEN FINANCED IN PART THROUGH A GRANT FROM THE U.S. DEPARTMENT OF TRANSPORTATION, FEDERAL TRANSIT ADMINISTRATION (FTA), UNDER THE FEDERAL TRANSIT ACT OF 1964, AS AMENDED, AND IN PART BY THE TAXES OF THE CITIZENS OF LOS ANGELES COUNTY AND OF THE STATE OF CALIFORNIA.

Rev No.	Date	Description
1	3/21	Proposed OH power pole added to Section C
2	12/21	
3	6/22	Proposed OH power pole removed from Section C

DESIGNED BY Z. MACDONELL
DRAWN BY M. SHAHIN
CHECKED BY A. MULL
IN CHARGE T. KIM
DATE 6/01/2022

REGISTERED PROFESSIONAL ENGINEER No. Exp. CIVIL STATE OF CALIFORNIA

Metro
LOS ANGELES COUNTY
METROPOLITAN TRANSPORTATION AUTHORITY

HDR
HDR ENGINEERING
350 S. GRAND AVENUE
SUITE 2900
LOS ANGELES, CA 90071
(213) 239-5800

SUBMITTED: _____ PROJECT MANAGER
APPROVED: _____

LINK UNION STATION PROJECT

TRACK DRAWINGS
TRACK TYPICAL SECTIONS AND DETAILS
SHEET 2 OF 3

CONTRACT NO
DRAWING NO TS-002
REV
SCALE NO SCALE
SHEET NO 4

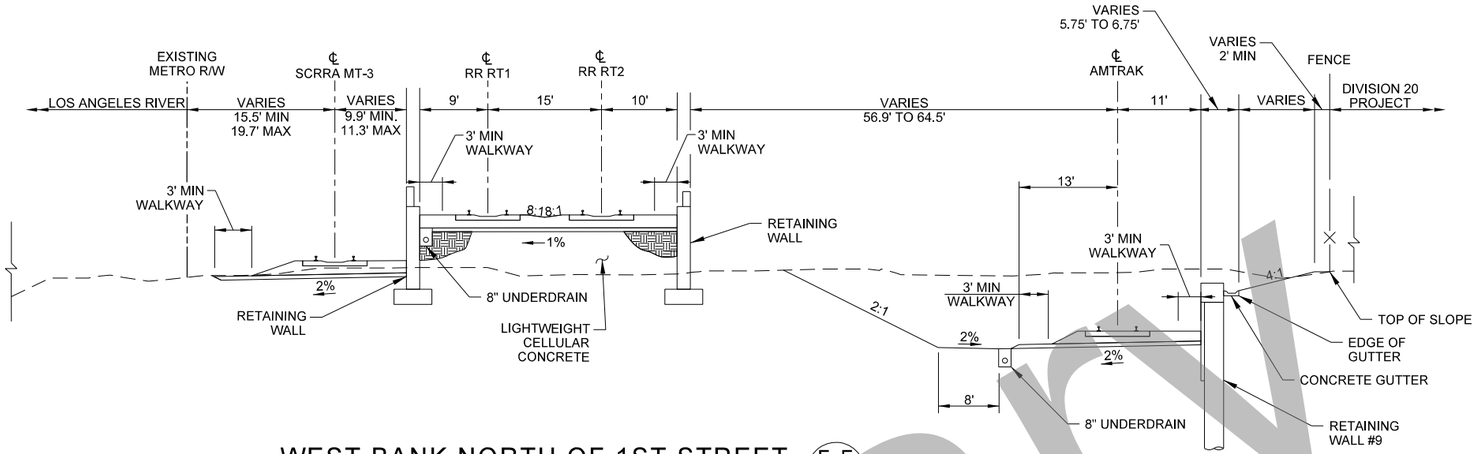

WEST BANK NORTH OF 1ST STREET (F-F)

NO SCALE

APPROX. RR RT1 STA 136+80 TO 141+00

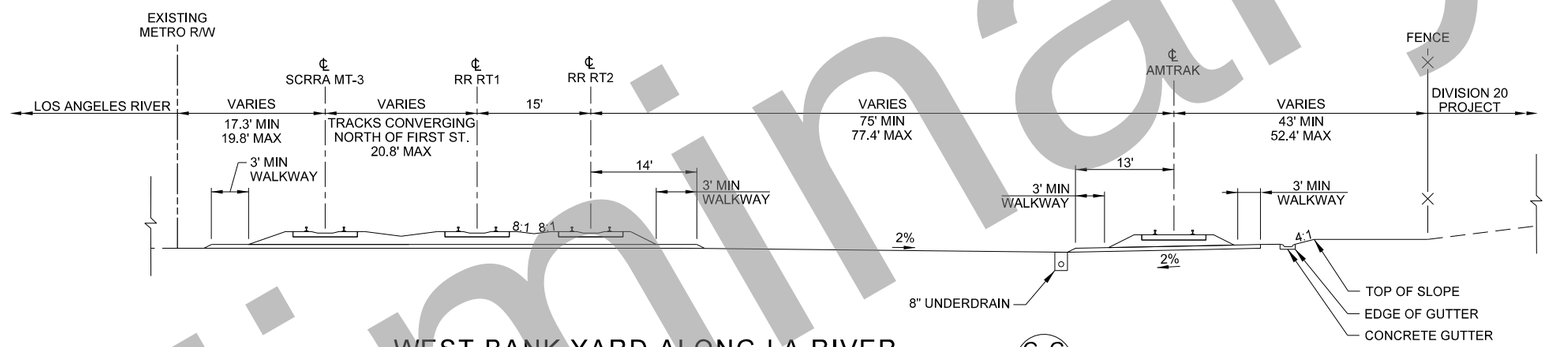

WEST BANK YARD ALONG LA RIVER (G-G)

NO SCALE

APPROX. RR RT1 STA 141+00 TO 143+00

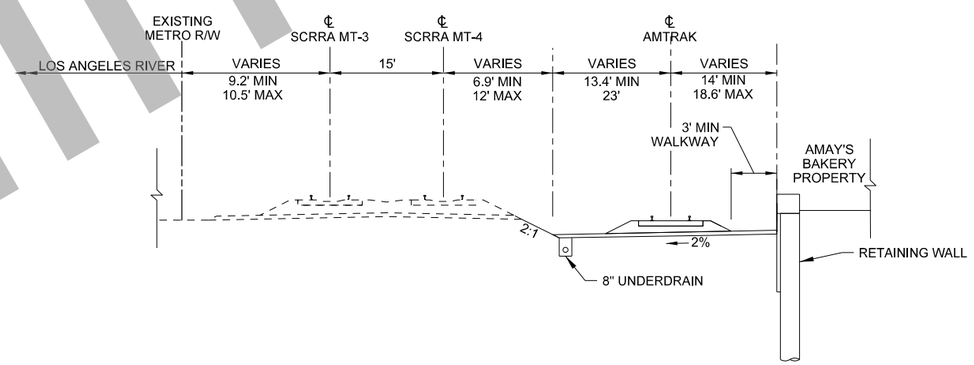

WEST BANK SOUTH OF US-101 (H-H)

NO SCALE

APPROX. AMTRAK LEAD STA 15+20 TO 16+75

NOTES:

1. SEE UTILITY PLANS FOR EXISTING AND PROPOSED UTILITIES
2. SEE DRAINAGE PLANS FOR DRAINAGE RELATED WORK
3. SEE STRUCTURES PLANS FOR BRIDGE, RETAINING WALL, AND PROTECTION SLAB WORK
4. SEE ROADWAY PLANS FOR ROADWAY RELATED WORK

Preliminary

35% DESIGN PLANS
NOT FOR CONSTRUCTION

Original plan submittal made in Aug. 2019

THE PREPARATION OF THIS DRAWING HAS BEEN FINANCED IN PART THROUGH A GRANT FROM THE U.S. DEPARTMENT OF TRANSPORTATION, FEDERAL TRANSIT ADMINISTRATION (FTA), UNDER THE FEDERAL TRANSIT ACT OF 1964, AS AMENDED, AND IN PART BY THE TAXES OF THE CITIZENS OF LOS ANGELES COUNTY AND OF THE STATE OF CALIFORNIA.

Rev No.	Date	Description
1	3/21	Narrower retained fill section shown
2	12/21	
3	6/22	

DESIGNED BY Z. MACDONELL
DRAWN BY M. SHAHIN
CHECKED BY A. MULL
IN CHARGE T. KIM
DATE 3/05/2021

REGISTERED PROFESSIONAL ENGINEER — No. — Exp. — CIVIL — STATE OF CALIFORNIA

Metro

LOS ANGELES COUNTY
METROPOLITAN TRANSPORTATION AUTHORITY

HDR ENGINEERING
350 S. GRAND AVENUE
SUITE 2900
LOS ANGELES, CA 90071
(213) 239-5800

SUBMITTED: _____ PROJECT MANAGER

APPROVED: _____

LINK UNION STATION PROJECT

TRACK DRAWINGS
TRACK TYPICAL SECTIONS AND DETAILS
SHEET 3 OF 3

CONTRACT NO
DRAWING NO TS-003
REV
SCALE NO SCALE
SHEET NO 5

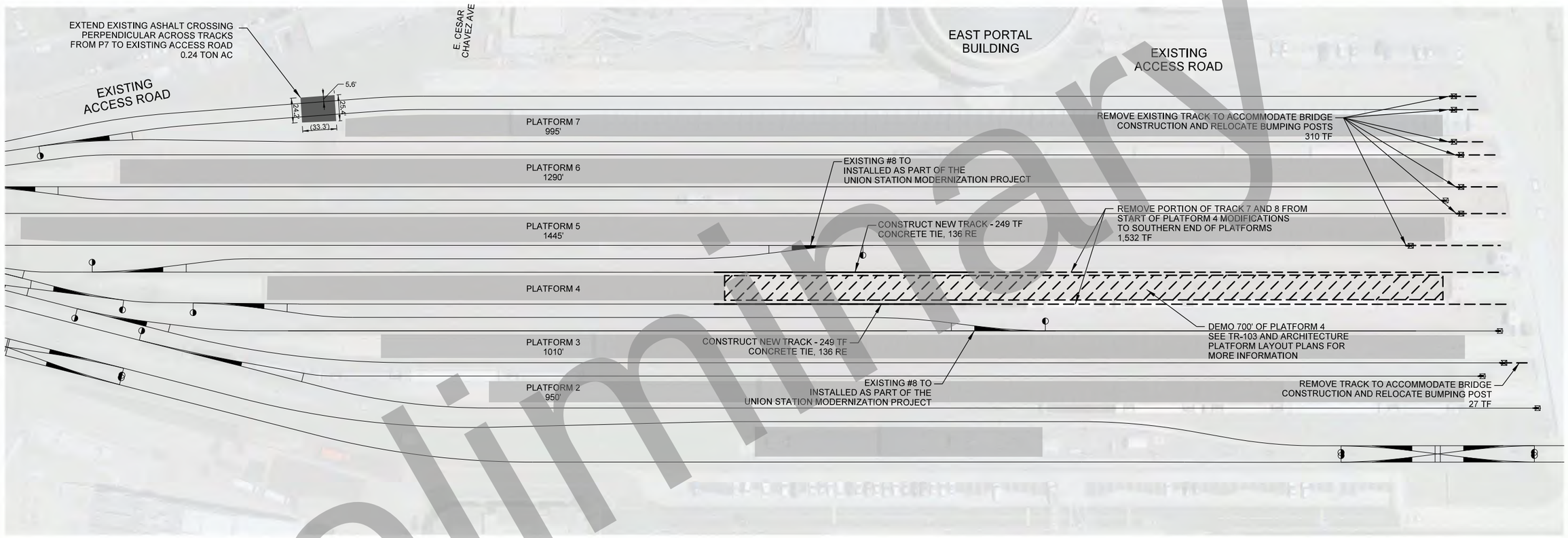

NOTES:

1. EXISTING CONDITION REFLECTS IMPROVEMENTS MADE AS PART OF THE UNION STATION MODERNIZATION PROJECT

N

50 0 50 100

1"=50'

35% DESIGN PLANS
NOT FOR CONSTRUCTION

Preliminary

Original plan submittal made in Aug. 2019

Rev No.	Date	Description
1	3/21	Modified track layout along Platform 4
2	12/21	
3	6/22	

THE PREPARATION OF THIS DRAWING HAS BEEN FINANCED IN PART THROUGH A GRANT FROM THE U.S. DEPARTMENT OF TRANSPORTATION, FEDERAL TRANSIT ADMINISTRATION (FTA), UNDER THE FEDERAL TRANSIT ACT OF 1964, AS AMENDED, AND IN PART BY THE TAXES OF THE CITIZENS OF LOS ANGELES COUNTY AND OF THE STATE OF CALIFORNIA.

DESIGNED BY Z. MACDONELL
DRAWN BY M. SHAHIN
CHECKED BY A. MULL
IN CHARGE T. KIM
DATE 3/05/2021

REGISTERED PROFESSIONAL ENGINEER — No. Exp. CIVIL — STATE OF CALIFORNIA

Metro

LOS ANGELES COUNTY
METROPOLITAN TRANSPORTATION AUTHORITY

HDR ENGINEERING
350 S. GRAND AVENUE
SUITE 2900
LOS ANGELES, CA 90071
(213) 239-5800

SUBMITTED: _____ PROJECT MANAGER

APPROVED: _____

LINK UNION STATION PROJECT

TRACK DRAWINGS
TRACK REMOVAL PLAN
SHEET 1 OF 2

CONTRACT NO

DRAWING NO TR-101 REV

SCALE HORIZ: 1"=50'

SHEET NO 6

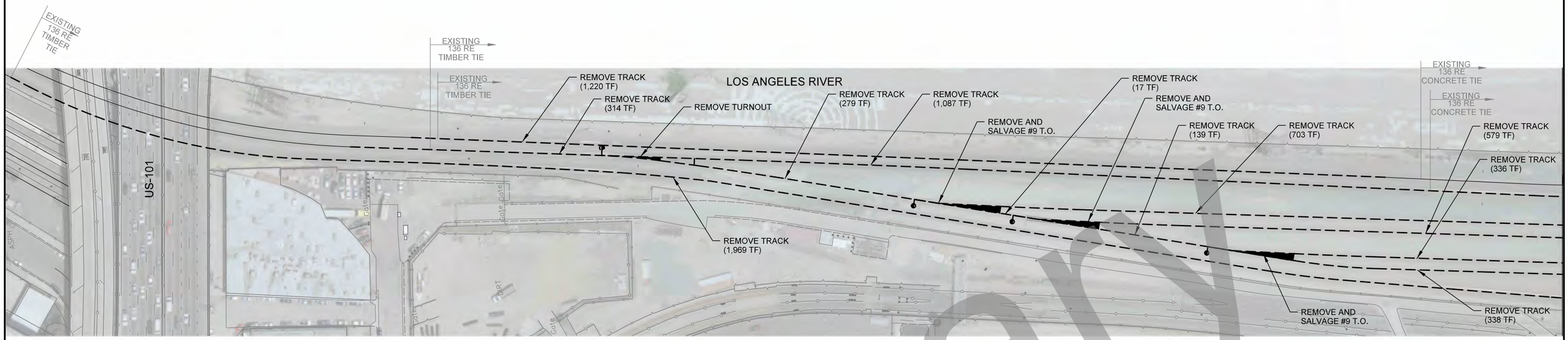



Preliminary

35% DESIGN PLANS
NOT FOR CONSTRUCTION

Original plan submittal made in Aug. 2019

THE PREPARATION OF THIS DRAWING HAS BEEN FINANCED IN PART THROUGH A GRANT FROM THE U.S. DEPARTMENT OF TRANSPORTATION, FEDERAL TRANSIT ADMINISTRATION (FTA), UNDER THE FEDERAL TRANSIT ACT OF 1964, AS AMENDED, AND IN PART BY THE TAXES OF THE CITIZENS OF LOS ANGELES COUNTY AND OF THE STATE OF CALIFORNIA.

Rev No.	Date	Description
1	3/21	Additional tracks shown to be removed.
2	12/21	
3	6/22	

DESIGNED BY Z. MACDONELL
DRAWN BY M. SHAHIN
CHECKED BY A. MULL
IN CHARGE T. KIM
DATE 3/05/2021

REGISTERED PROFESSIONAL ENGINEER No. Exp. CIVIL STATE OF CALIFORNIA

Metro
LOS ANGELES COUNTY
METROPOLITAN TRANSPORTATION AUTHORITY
HDR ENGINEERING
350 S. GRAND AVENUE
SUITE 2900
LOS ANGELES, CA 90071
(213) 239-5800

SUBMITTED: _____ PROJECT MANAGER
APPROVED: _____

LINK UNION STATION PROJECT

TRACK DRAWINGS
TRACK REMOVAL PLAN
SHEET 2 OF 2

CONTRACT NO
DRAWING NO TR-102
REV
SCALE HORIZ: 1"=60'
SHEET NO 7

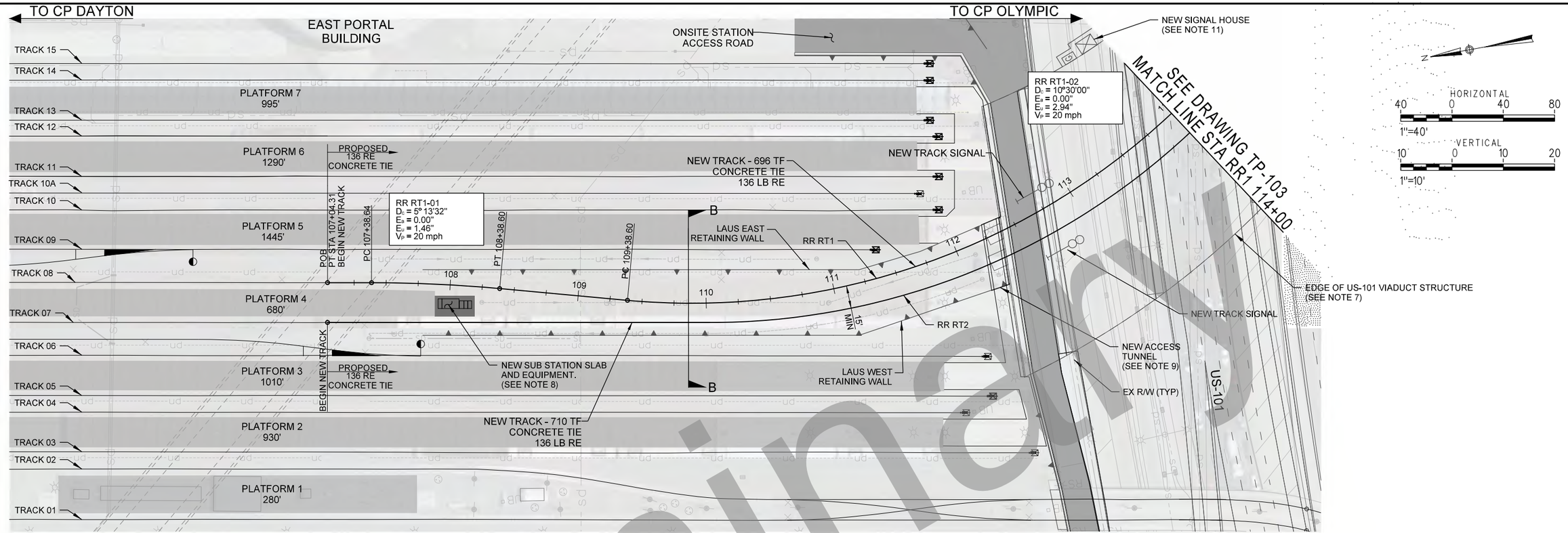

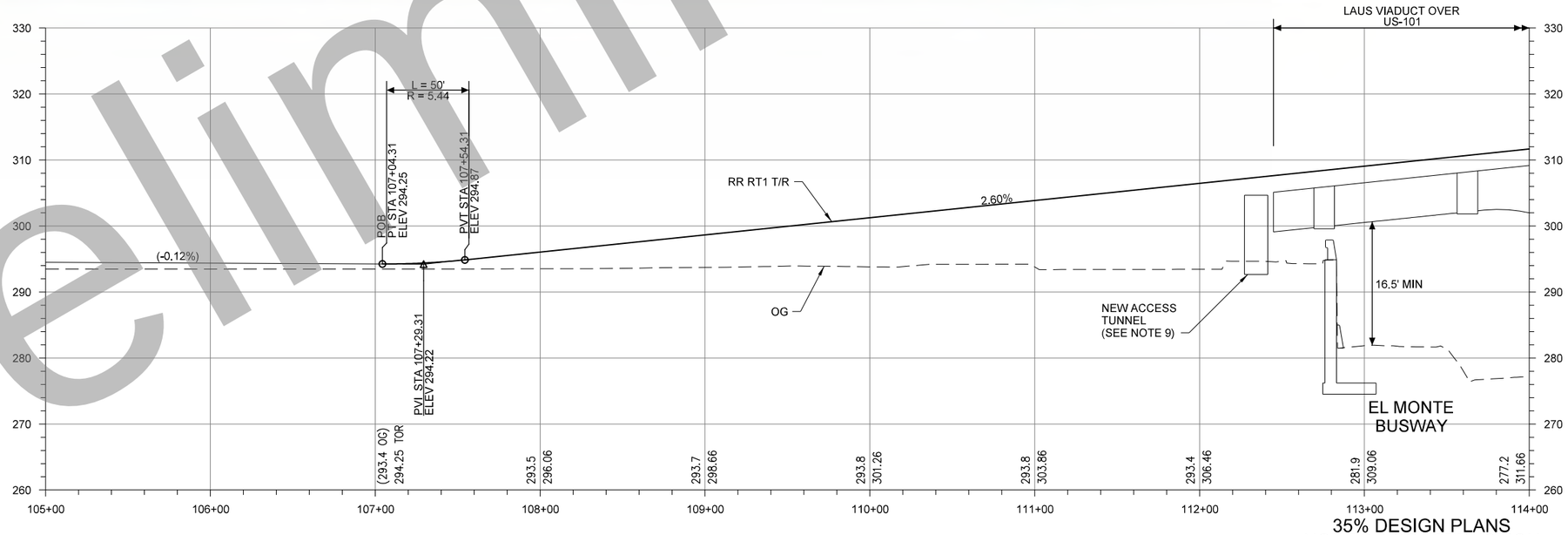

NOTES:

1. SEE UTILITY PLANS FOR EXISTING AND PROPOSED UTILITIES
2. SEE DRAINAGE PLANS FOR DRAINAGE RELATED WORK
3. SEE STRUCTURES PLANS FOR BRIDGE, RETAINING WALL, AND PROTECTION SLAB WORK
4. SEE ROADWAY PLANS FOR ROADWAY RELATED WORK
5. SEE STATION ARCHITECTURAL PLANS FOR ARCHITECTURAL AND RELATED WORK
6. SEE ON-SITE STATION CIVIL PLANS FOR ON-SITE CIVIL RELATED WORK
7. SEE CALTRANS PLANS FOR US-101 VIADUCT STRUCTURE RELATED WORK
8. SEE ARCHITECTURAL PLANS FOR NEW SUB STATION SLAB AND EQUIPMENT RELATED WORK
9. SEE ON-SITE STRUCTURAL PLANS FOR ON-SITE STRUCTURAL RELATED WORK
10. SEE TRACK SIGNAL PLANS FOR TRACK SIGNAL RELATED WORK
11. SIGNAL INFRASTRUCTURE LOCATION TO BE EVALUATED IN NEXT PHASE OF DESIGN
12. EXISTING CONDITION REFLECTS IMPROVEMENTS MADE AS PART OF THE UNION STATION MODERIZATION PROJECT

Original plan submittal made in Aug. 2019

Preliminary

THE PREPARATION OF THIS DRAWING HAS BEEN FINANCED IN PART THROUGH A GRANT FROM THE U.S. DEPARTMENT OF TRANSPORTATION, FEDERAL TRANSIT ADMINISTRATION (FTA), UNDER THE FEDERAL TRANSIT ACT OF 1964, AS AMENDED, AND IN PART BY THE TAXES OF THE CITIZENS OF LOS ANGELES COUNTY AND OF THE STATE OF CALIFORNIA.

Rev No.	Date	Description
1	3/21	Layout expanded to show all platforms
2	12/21	
3	6/22	

DESIGNED BY Z. MACDONELL
DRAWN BY M. SHAHIN
CHECKED BY A. MULL
IN CHARGE T. KIM
DATE 3/05/2021

REGISTERED PROFESSIONAL ENGINEER — No. Exp. CIVIL — STATE OF CALIFORNIA

Metro

LOS ANGELES COUNTY METROPOLITAN TRANSPORTATION AUTHORITY

HDR ENGINEERING
350 S. GRAND AVENUE SUITE 2900
LOS ANGELES, CA 90071
(213) 239-5800

SUBMITTED: _____ PROJECT MANAGER

APPROVED: _____

LINK UNION STATION PROJECT

TRACK DRAWINGS
TRACK PLAN AND PROFILE
RR1 STA 107+04.31 TO RR1 STA 114+00

CONTRACT NO

DRAWING NO TP-102 | REV

SCALE HORIZ: 1"=40' VERT: 1"=10'

SHEET NO 8

35% DESIGN PLANS
NOT FOR CONSTRUCTION

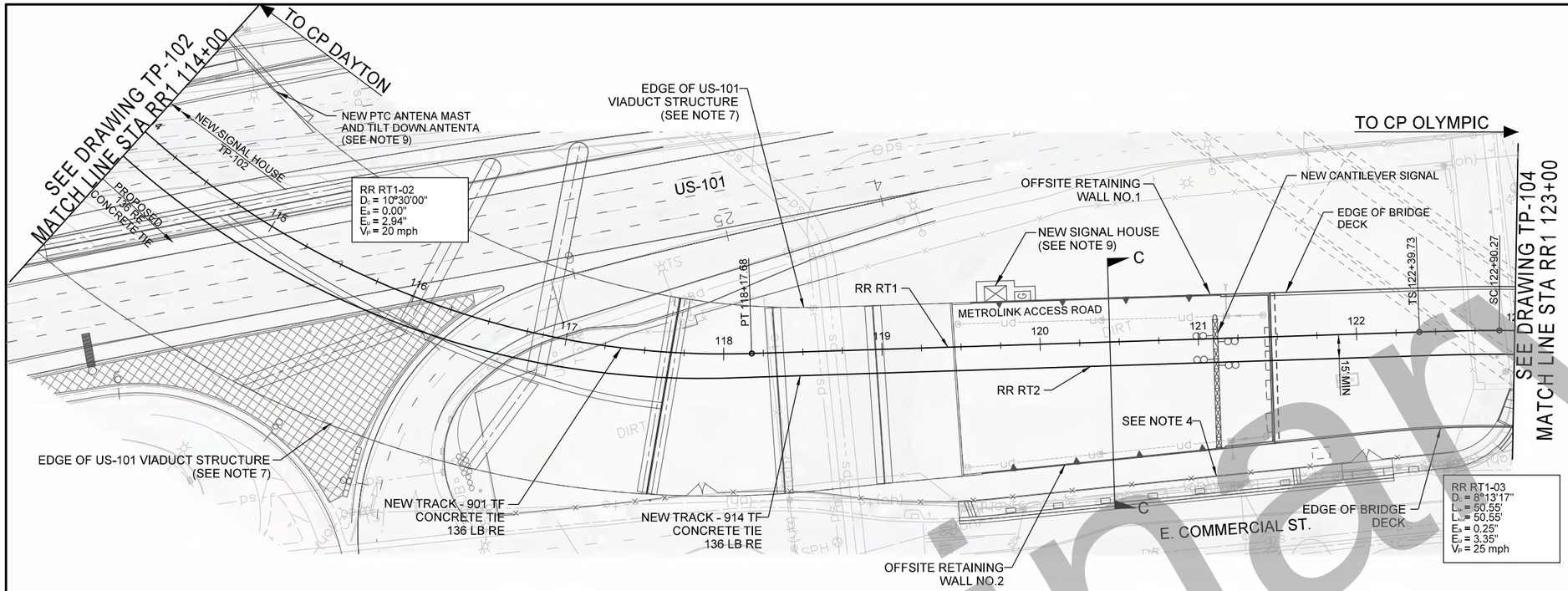

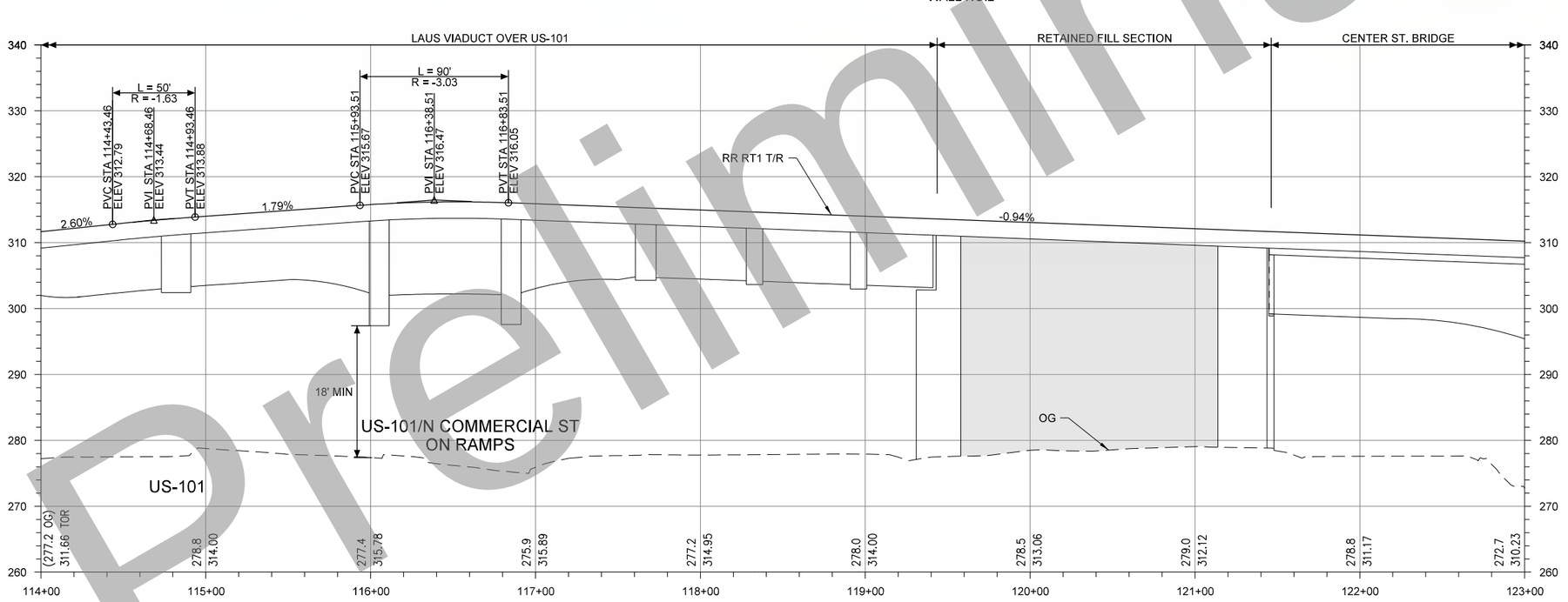

NOTES:

1. SEE UTILITY PLANS FOR EXISTING AND PROPOSED UTILITIES
2. SEE DRAINAGE PLANS FOR DRAINAGE RELATED WORK
3. SEE STRUCTURES PLANS FOR BRIDGE, RETAINING WALL, AND PROTECTION SLAB WORK
4. SEE ROADWAY PLANS FOR ROADWAY RELATED WORK
5. SEE STATION ARCHITECTURAL PLANS FOR ARCHITECTURAL RELATED WORK
6. SEE ON-SITE STATION CIVIL PLANS FOR ON-SITE CIVIL RELATED WORK
7. SEE CALTRANS PLANS FOR US-101 VIADUCT STRUCTURE RELATED WORK
8. SEE TRACK SIGNAL PLANS FOR TRACK SIGNAL RELATED WORK
9. SIGNAL INFRASTRUCTURE LOCATION TO BE EVALUATED IN NEXT PHASE OF DESIGN

35% DESIGN PLANS
NOT FOR CONSTRUCTION

Preliminary

Original plan submittal made in Aug. 2019

THE PREPARATION OF THIS DRAWING HAS BEEN FINANCED IN PART THROUGH A GRANT FROM THE U.S. DEPARTMENT OF TRANSPORTATION, FEDERAL TRANSIT ADMINISTRATION (FTA), UNDER THE FEDERAL TRANSIT ACT OF 1964, AS AMENDED, AND IN PART BY THE TAXES OF THE CITIZENS OF LOS ANGELES COUNTY AND OF THE STATE OF CALIFORNIA.

Rev No.	Date	Description
1	3/21	Additional structural details shown
2	12/21	
3	6/22	

DESIGNED BY Z. MACDONELL
DRAWN BY M. SHAHIN
CHECKED BY A. MULL
IN CHARGE T. KIM
DATE 3/05/2021

REGISTERED PROFESSIONAL ENGINEER — No. — EXP. — CIVIL — STATE OF CALIFORNIA

Metro
LOS ANGELES COUNTY
METROPOLITAN TRANSPORTATION AUTHORITY

HDR
HDR ENGINEERING
350 S. GRAND AVENUE
SUITE 2900
LOS ANGELES, CA 90071
(213) 239-5800

SUBMITTED: _____ PROJECT MANAGER

APPROVED: _____

LINK UNION STATION PROJECT

TRACK DRAWINGS

TRACK PLAN AND PROFILE
RR1 STA 114+00 TO RR1 STA 123+00

CONTRACT NO

DRAWING NO TP-103 REV

SCALE HORIZ: 1"=40'
VERT: 1"=10'

SHEET NO 9

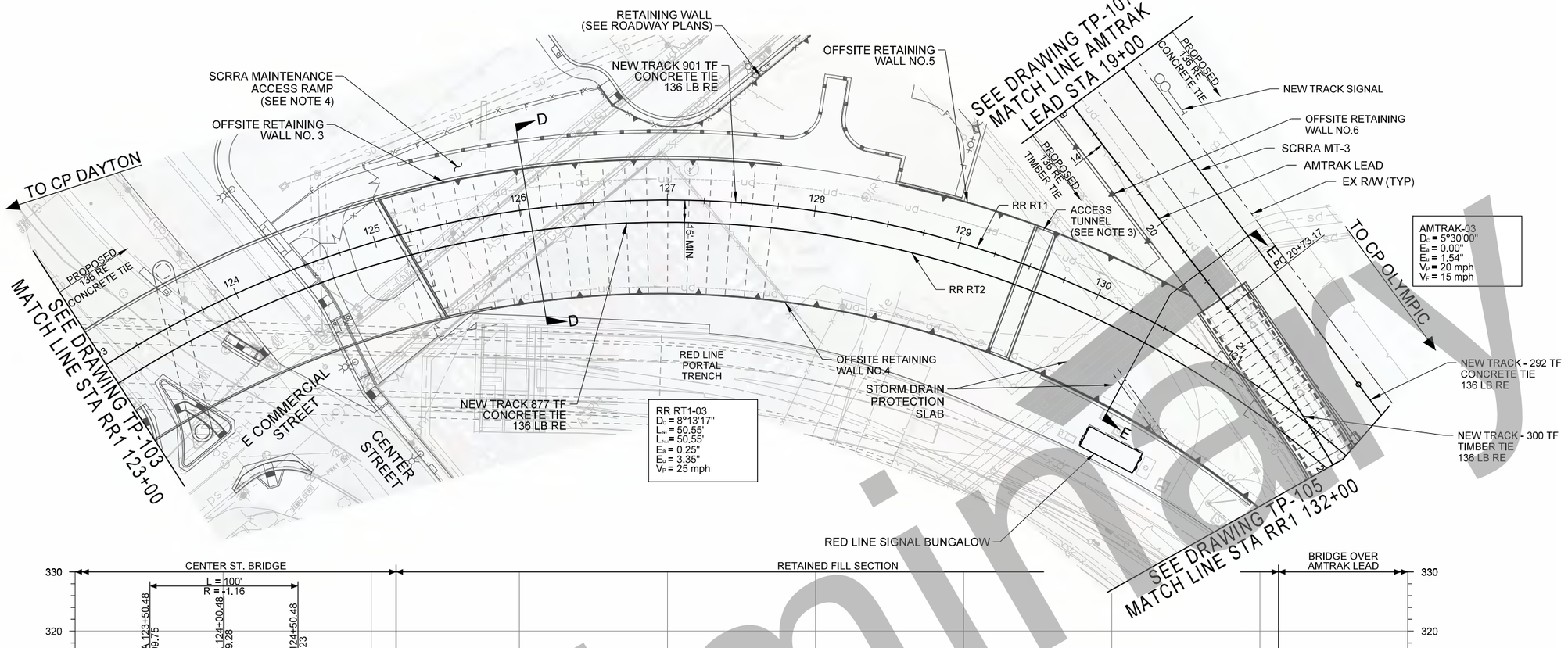

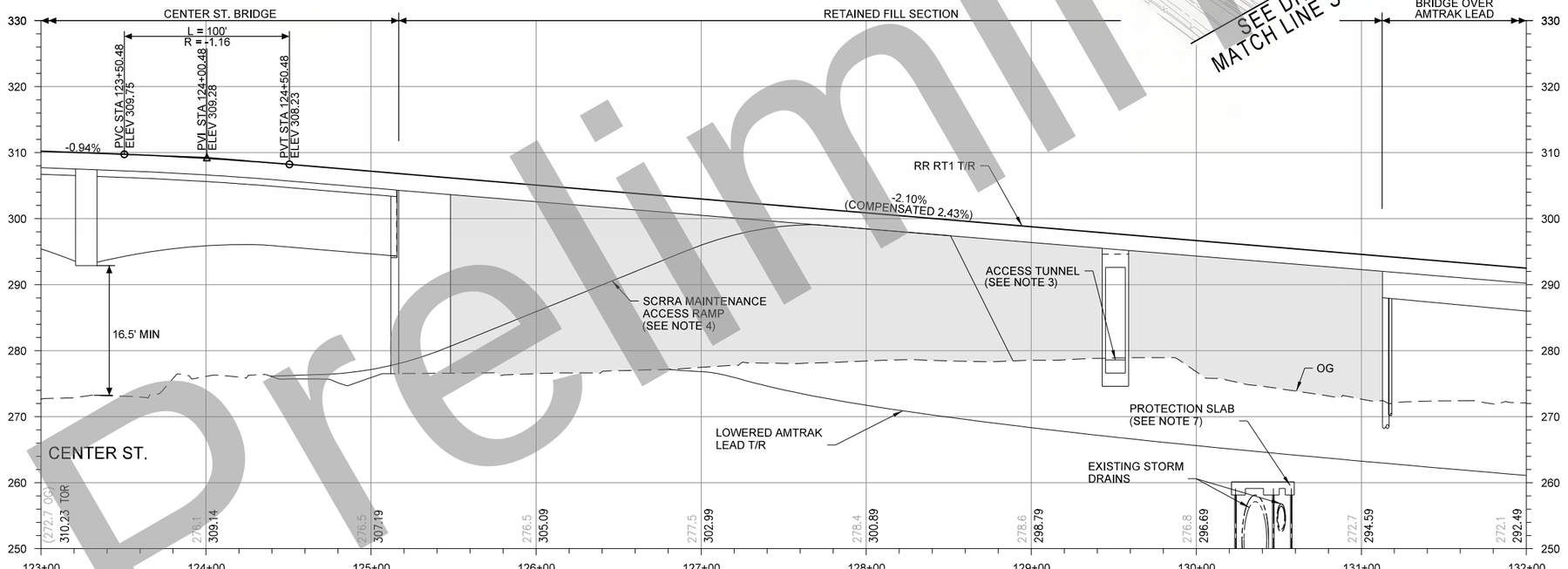

NOTES:

1. SEE UTILITY PLANS FOR EXISTING AND PROPOSED UTILITIES
2. SEE DRAINAGE PLANS FOR DRAINAGE RELATED WORK
3. SEE STRUCTURES PLANS FOR BRIDGE, RETAINING WALL, PROTECTION SLAB WORK, AND ACCESS TUNNEL WORK
4. SEE ROADWAY PLANS FOR ROADWAY AND SCCRA MAINTENANCE RAMP RELATED WORK
5. SEE SHEETS TP-107 AND TP-108 FOR THE AMTRAK LEAD PROFILE
6. CURVE RADII ACCOMODATE TWO 650' RADIUS TRACKS INSIDE REGIONAL RAIL TRACKS
7. SEE STRUCTURES PLANS FOR CLEARANCES AND DETAILS ON PROPOSED RAIL STRUCTURES
8. SEE TRACK SIGNAL PLANS FOR TRACK SIGNAL RELATED WORK

35% DESIGN PLANS
NOT FOR CONSTRUCTION

Preliminary

Original plan submittal made in Aug. 2019

THE PREPARATION OF THIS DRAWING HAS BEEN FINANCED IN PART THROUGH A GRANT FROM THE U.S. DEPARTMENT OF TRANSPORTATION, FEDERAL TRANSIT ADMINISTRATION (FTA), UNDER THE FEDERAL TRANSIT ACT OF 1964, AS AMENDED, AND IN PART BY THE TAXES OF THE CITIZENS OF LOS ANGELES COUNTY AND OF THE STATE OF CALIFORNIA.

Rev No.	Date	Description
1	3/21	
2	12/21	
3	6/22	Updated to reflect new/revised sheets

DESIGNED BY Z. MACDONELL
DRAWN BY M. SHAHIN
CHECKED BY A. MULL
IN CHARGE T. KIM
DATE 6/01/2022

REGISTERED PROFESSIONAL ENGINEER — No. — Exp. — CIVIL — STATE OF CALIFORNIA

Metro
LOS ANGELES COUNTY
METROPOLITAN TRANSPORTATION AUTHORITY

HDR

HDR ENGINEERING
350 S. GRAND AVENUE
SUITE 2900
LOS ANGELES, CA 90071
(213) 239-5800

SUBMITTED: _____ PROJECT MANAGER
APPROVED: _____

LINK UNION STATION PROJECT

TRACK DRAWINGS
TRACK PLAN AND PROFILE
RR1 STA 123+00 TO RR1 STA 132+00

CONTRACT NO
DRAWING NO TP-104
REV
SCALE HORIZ: 1"=40' VERT: 1"=10'
SHEET NO 10

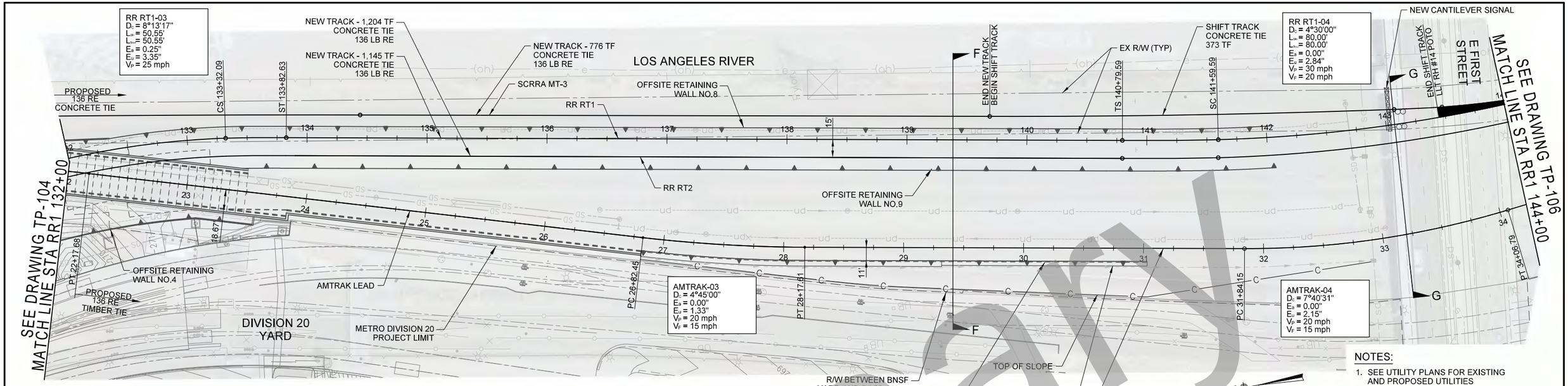

NOTES:

1. SEE UTILITY PLANS FOR EXISTING AND PROPOSED UTILITIES
2. SEE DRAINAGE PLANS FOR DRAINAGE RELATED WORK
3. SEE STRUCTURES PLANS FOR BRIDGE AND RETAINING WALL WORK
4. SEE ROADWAY PLANS FOR ROADWAY REALTED WORK
5. SEE SHEETS TP-107 AND TP-108 FOR THE AMTRAK LEAD PROFILE
6. VERTICAL CLEARANCE UNDER E 1ST ST MATCHES EXISTING CONDITION
7. SEE TRACK SIGNAL PLANS FOR TRACK SIGNAL RELATED WORK

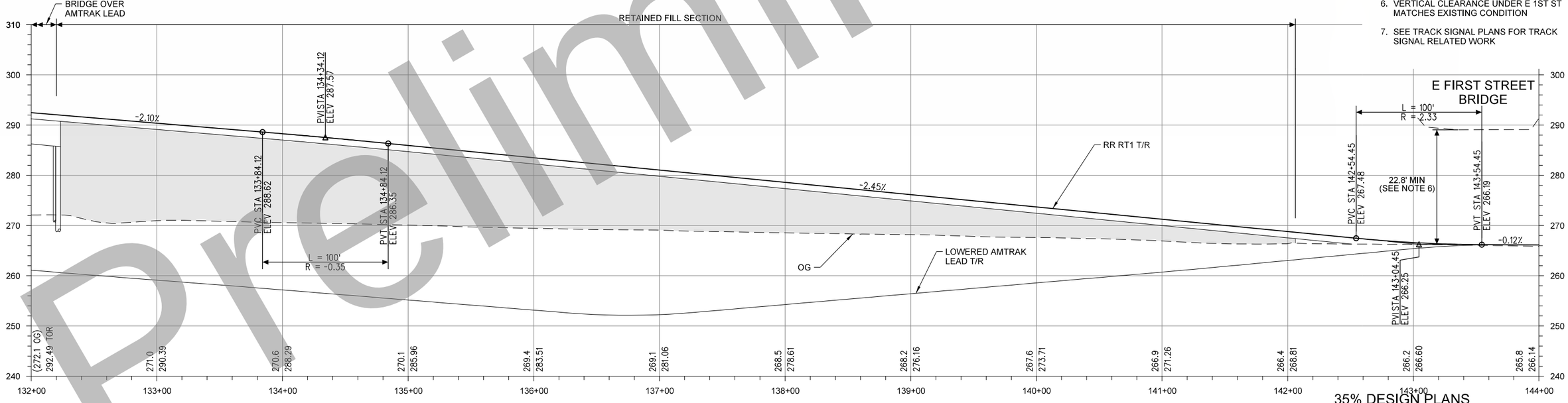

35% DESIGN PLANS
NOT FOR CONSTRUCTION

Preliminary

Original plan submittal made in Aug. 2019

THE PREPARATION OF THIS DRAWING HAS BEEN FINANCED IN PART THROUGH A GRANT FROM THE U.S. DEPARTMENT OF TRANSPORTATION, FEDERAL TRANSIT ADMINISTRATION (FTA), UNDER THE FEDERAL TRANSIT ACT OF 1964, AS AMENDED, AND IN PART BY THE TAXES OF THE CITIZENS OF LOS ANGELES COUNTY AND OF THE STATE OF CALIFORNIA.

Rev No.	Date	Description
1	3/21	Narrower retained fill section and shorter Amtrak lead bridge shown
2	12/21	
3	6/22	

DESIGNED BY Z. MACDONELL
DRAWN BY M. SHAHIN
CHECKED BY A. MULL
IN CHARGE T. KIM
DATE 3/05/2021

REGISTERED PROFESSIONAL ENGINEER — No. EXP. — CIVIL — STATE OF CALIFORNIA

Metro
LOS ANGELES COUNTY
METROPOLITAN TRANSPORTATION AUTHORITY

HDR
HDR ENGINEERING
350 S. GRAND AVENUE
SUITE 2900
LOS ANGELES, CA 90071
(213) 239-5800

SUBMITTED: _____ PROJECT MANAGER
APPROVED: _____

LINK UNION STATION PROJECT

TRACK DRAWINGS
TRACK PLAN AND PROFILE
RR1 STA 132+00 TO RR1 STA 144+00

CONTRACT NO
DRAWING NO TP-105
REV
SCALE HORIZ: 1"=40'
VERT: 1"=10'
SHEET NO 11

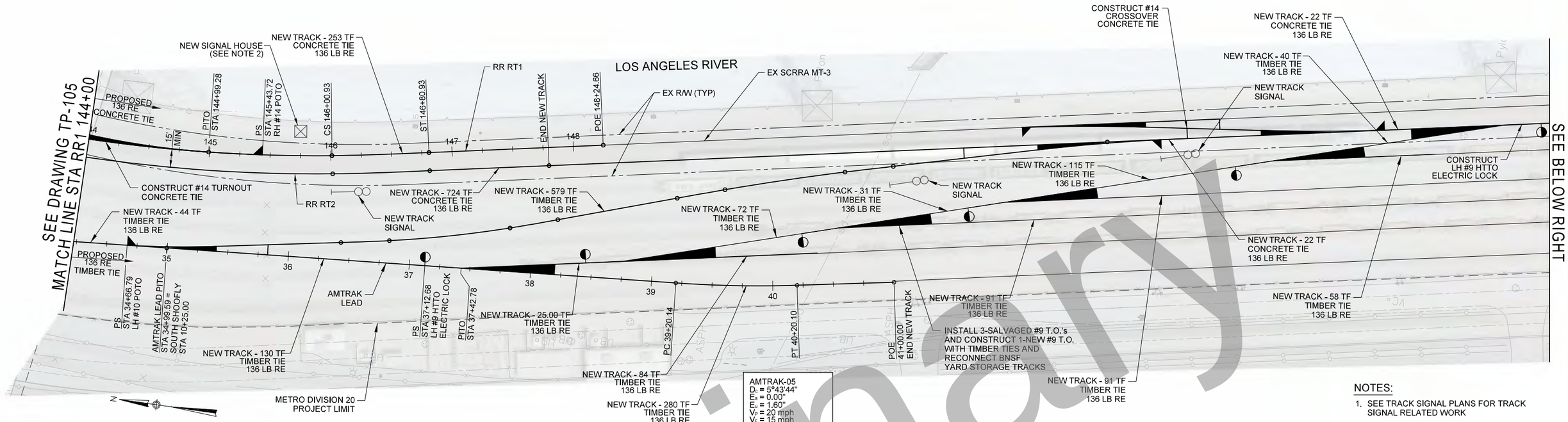

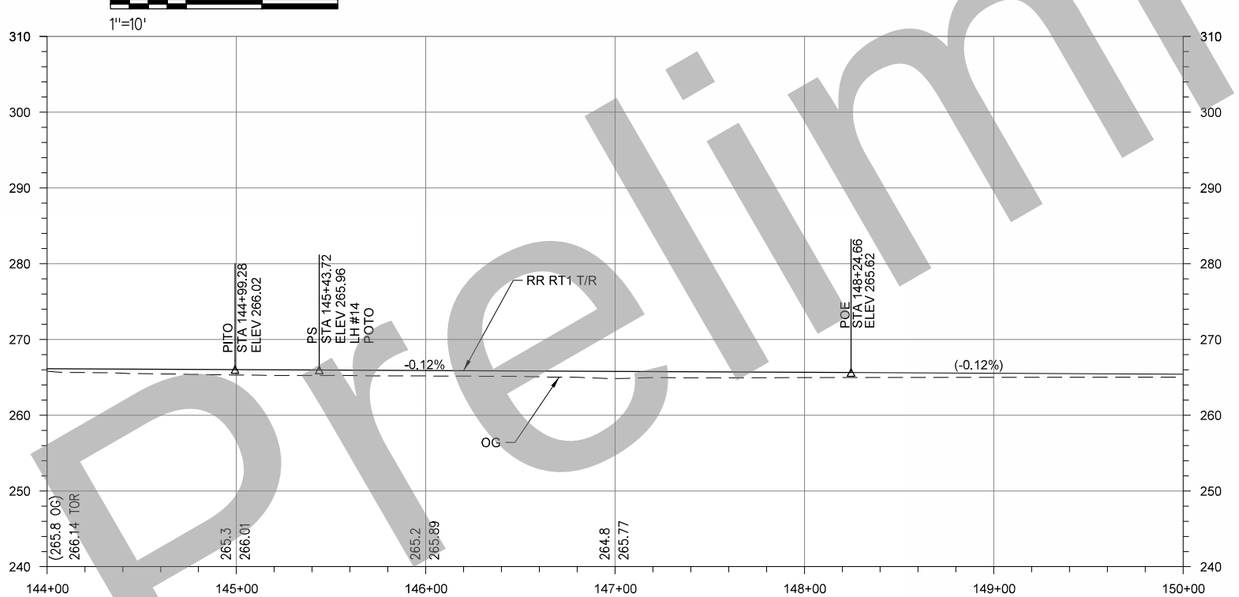

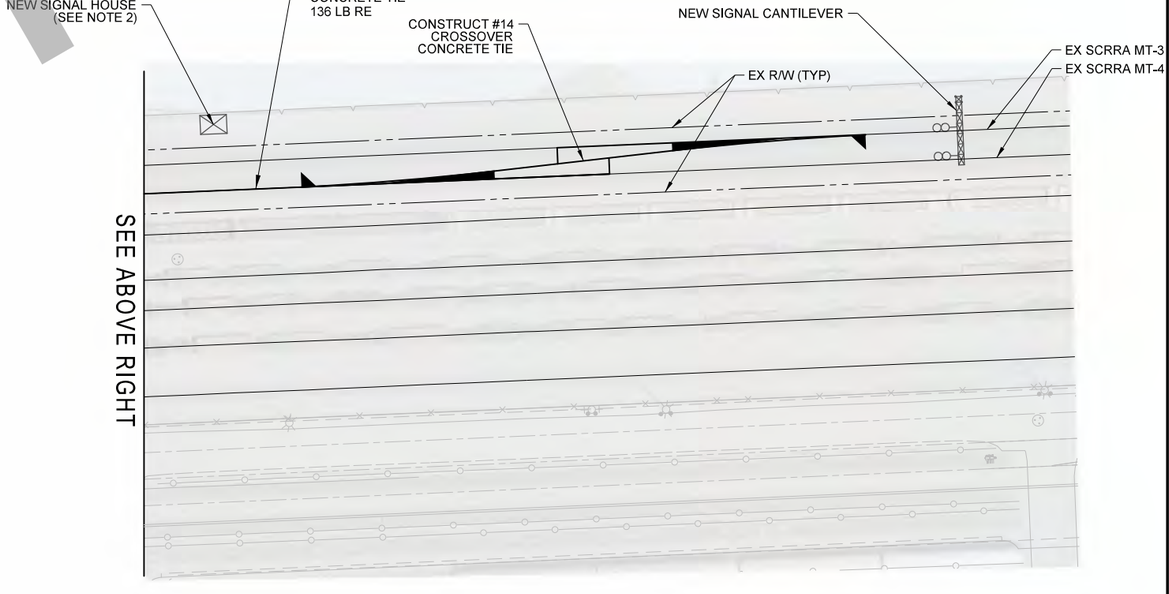

NOTES:

1. SEE TRACK SIGNAL PLANS FOR TRACK SIGNAL RELATED WORK
2. SIGNAL INFRASTRUCTURE LOCATION TO BE EVALUATED IN NEXT PHASE OF DESIGN

35% DESIGN PLANS
NOT FOR CONSTRUCTION

Preliminary

Original plan submittal made in Aug. 2019

THE PREPARATION OF THIS DRAWING HAS BEEN FINANCED IN PART THROUGH A GRANT FROM THE U.S. DEPARTMENT OF TRANSPORTATION, FEDERAL TRANSIT ADMINISTRATION (FTA), UNDER THE FEDERAL TRANSIT ACT OF 1964, AS AMENDED, AND IN PART BY THE TAXES OF THE CITIZENS OF LOS ANGELES COUNTY AND OF THE STATE OF CALIFORNIA.

Rev No.	Date	Description
1	3/21	Limits expanded, new track connection added from Amtrak lead to RT2
2	12/21	
3	6/22	

DESIGNED BY Z. MACDONELL
DRAWN BY M. SHAHIN
CHECKED BY A. MULL
IN CHARGE T. KIM
DATE 3/05/2021

REGISTERED PROFESSIONAL ENGINEER — No. Exp. CIVIL — STATE OF CALIFORNIA

Metro
LOS ANGELES COUNTY
METROPOLITAN TRANSPORTATION AUTHORITY

HDR
HDR ENGINEERING
350 S. GRAND AVENUE
SUITE 2900
LOS ANGELES, CA 90071
(213) 239-5800

SUBMITTED: _____ PROJECT MANAGER
APPROVED: _____

LINK UNION STATION PROJECT
TRACK DRAWINGS
TRACK PLAN AND PROFILE
RR1 STA 144+00 TO RR1 147+98.55

CONTRACT NO
DRAWING NO TP-106
REV
SCALE HORIZ: 1"=40' VERT: 1"=10'
SHEET NO 12

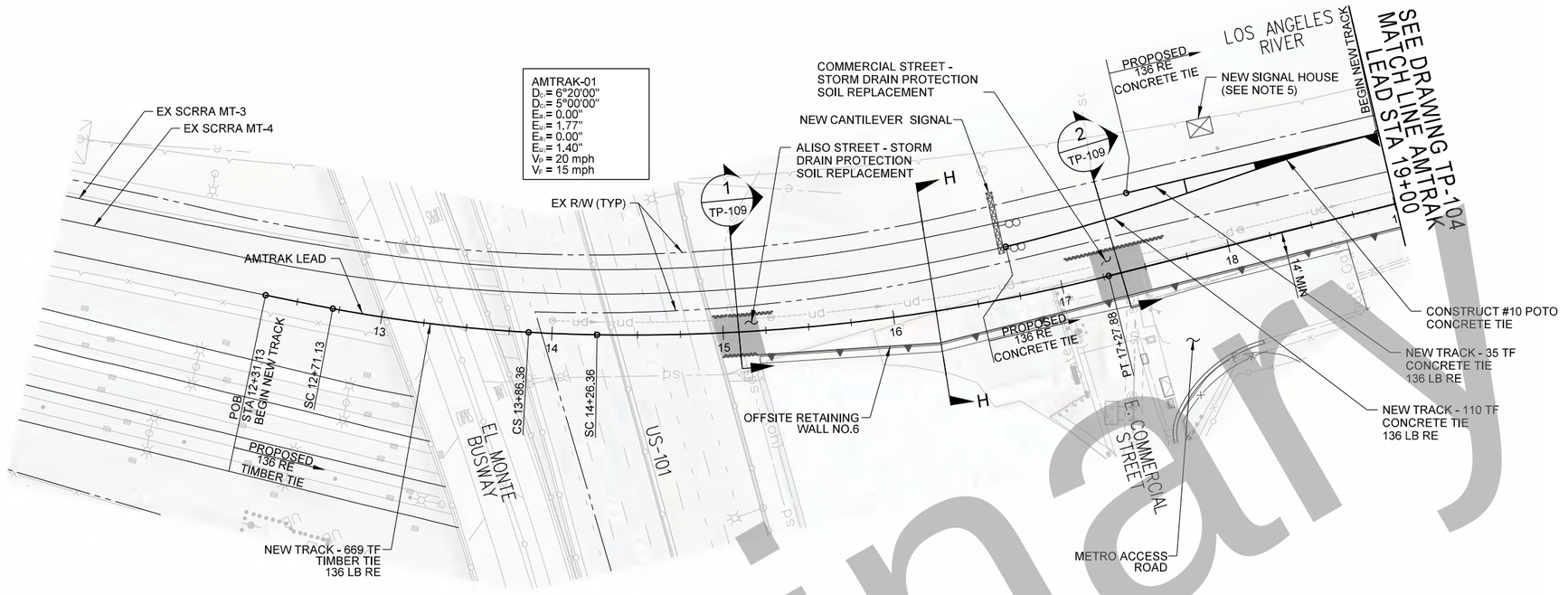

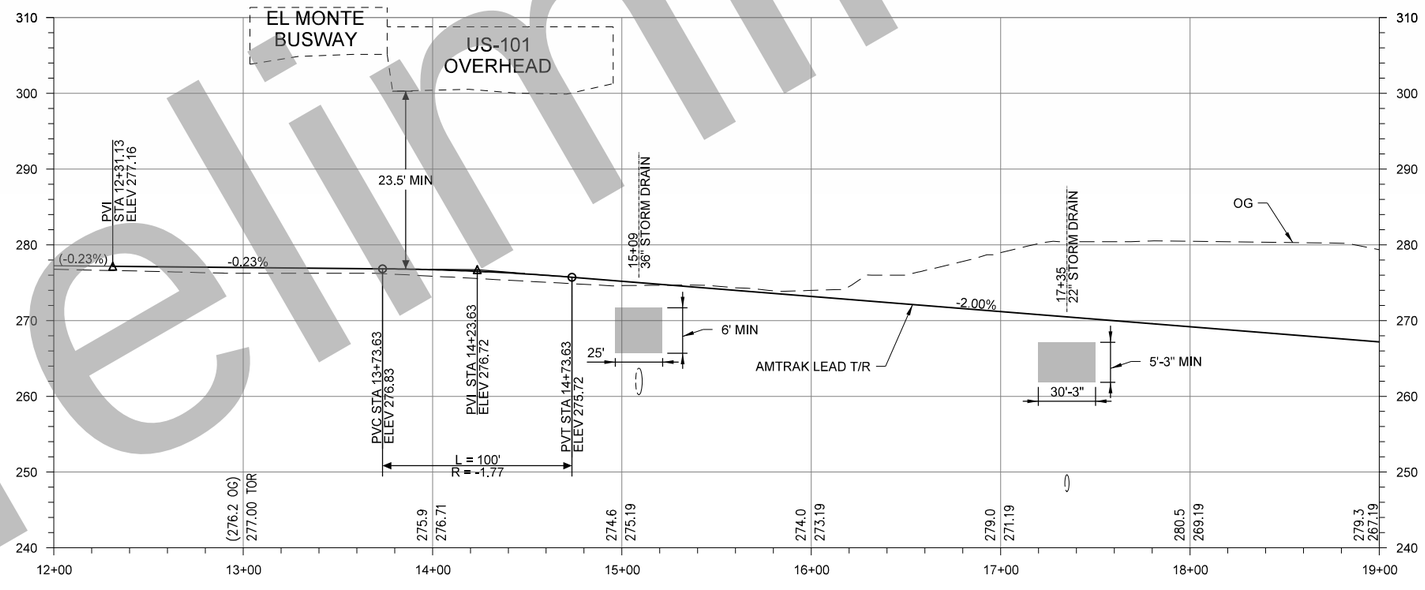

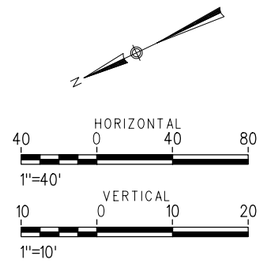

NOTES:

1. SEE UTILITY PLANS FOR EXISTING AND PROPOSED UTILITIES
2. SEE DRAINAGE PLANS FOR DRAINAGE RELATED WORK
3. SEE STRUCTURES PLANS FOR CLEARANCES AND DETAILS ON PROPOSED RAIL STRUCTURES
4. SEE TRACK SIGNAL PLANS FOR TRACK SIGNAL RELATED WORK
5. SIGNAL INFRASTRUCTURE LOCATION TO BE EVALUATED IN NEXT PHASE OF DESIGN

LEGEND:

- LIGHTWEIGHT CELLULAR CONCRETE FILL. SEE SHEET TP-109 FOR DETAILS
- SOIL REPLACEMENT SHORING WALL. SEE SHEET TP-109 FOR DETAILS

35% DESIGN PLANS
NOT FOR CONSTRUCTION

Preliminary

Original plan submittal made in Aug. 2019

THE PREPARATION OF THIS DRAWING HAS BEEN FINANCED IN PART THROUGH A GRANT FROM THE U.S. DEPARTMENT OF TRANSPORTATION, FEDERAL TRANSIT ADMINISTRATION (FTA), UNDER THE FEDERAL TRANSIT ACT OF 1964, AS AMENDED, AND IN PART BY THE TAXES OF THE CITIZENS OF LOS ANGELES COUNTY AND OF THE STATE OF CALIFORNIA.

Rev No.	Date	Description
1	3/21	Additional callouts and annotation included
2	12/21	
3	6/22	Updated to reflect storm drain protection under Amtrak Lead

DESIGNED BY Z. MACDONELL
DRAWN BY M. SHAHIN
CHECKED BY A. MULL
IN CHARGE T. KIM
DATE

REGISTERED PROFESSIONAL ENGINEER No. Exp. CIVIL STATE OF CALIFORNIA

Metro
LOS ANGELES COUNTY METROPOLITAN TRANSPORTATION AUTHORITY
HDR ENGINEERING
350 S. GRAND AVENUE SUITE 2900 LOS ANGELES, CA 90071 (213) 239-5800

SUBMITTED: _____ PROJECT MANAGER
APPROVED: _____

LINK UNION STATION PROJECT

TRACK DRAWINGS

TRACK PLAN AND PROFILE AMTRAK LEAD STA 12+31.13 TO AMTRAK LEAD STA 19+00

CONTRACT NO
DRAWING NO TP-107
REV
SCALE HORIZ: 1"=40' VERT: 1"=10'
SHEET NO 13

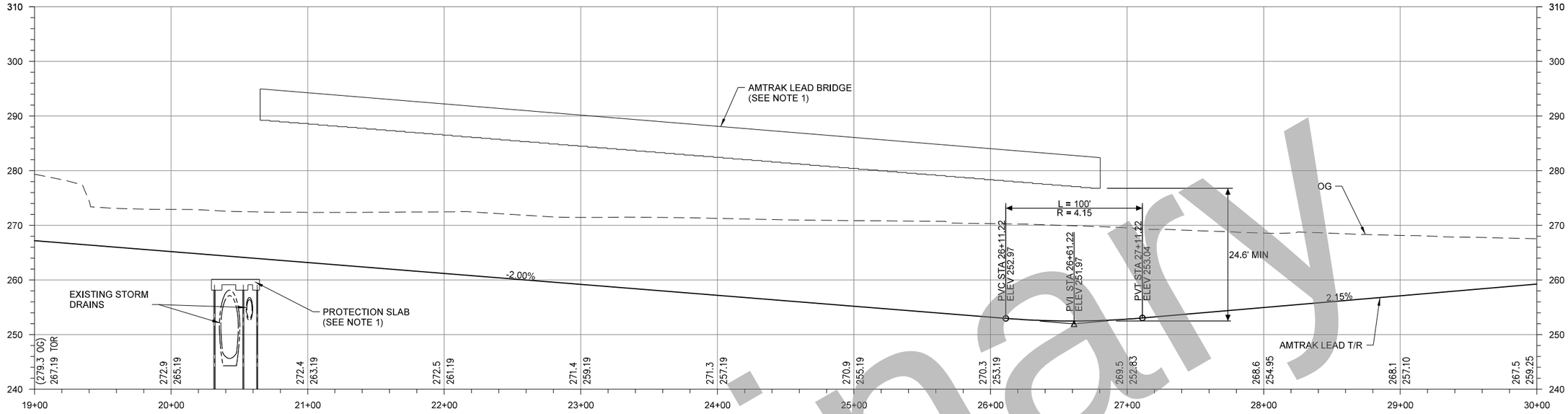

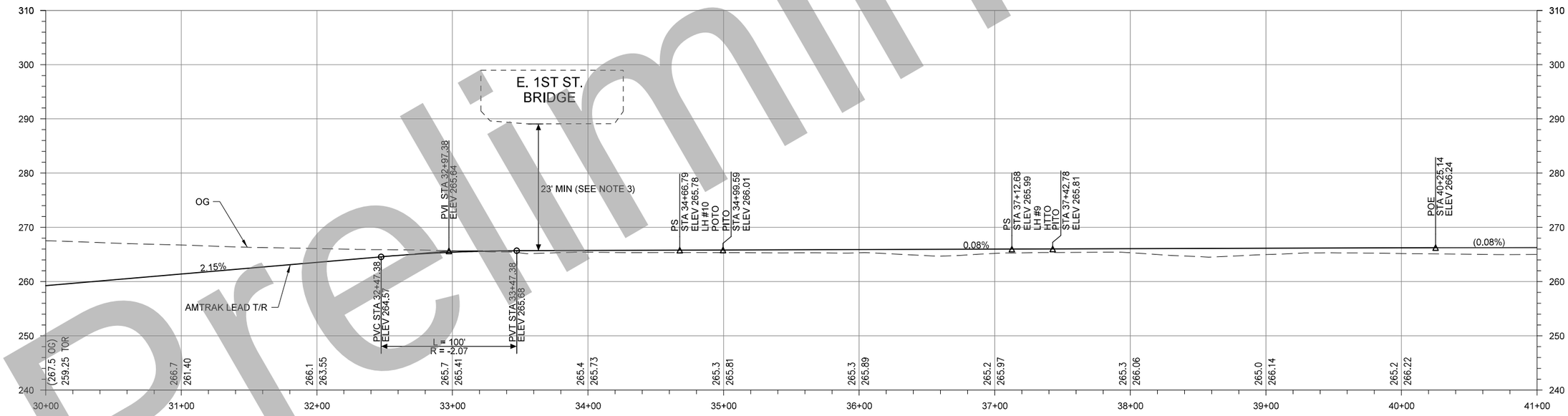

NOTES:

1. SEE STRUCTURES PLANS FOR CLEARANCES AND DETAILS ON PROPOSED RAIL STRUCTURES
2. SEE STRUCTURES PLANS FOR BRIDGE, RETAINING WALL, AND PROTECTION SLAB WORK
3. VERTICAL CLEARNACE UNDER E. 1ST ST. MATCHES EXISTING CONDITION

VERTICAL
10 0 10 20
1"=10'

35% DESIGN PLANS
NOT FOR CONSTRUCTION

Preliminary

Original plan submittal made in Aug. 2019

THE PREPARATION OF THIS DRAWING HAS BEEN FINANCED IN PART THROUGH A GRANT FROM THE U.S. DEPARTMENT OF TRANSPORTATION, FEDERAL TRANSIT ADMINISTRATION (FTA), UNDER THE FEDERAL TRANSIT ACT OF 1964, AS AMENDED, AND IN PART BY THE TAXES OF THE CITIZENS OF LOS ANGELES COUNTY AND OF THE STATE OF CALIFORNIA.

Rev No.	Date	Description
1	3/21	
2	12/21	
3	6/22	

DESIGNED BY Z. MACDONELL
DRAWN BY M. SHAHIN
CHECKED BY A. MULL
IN CHARGE T. KIM
DATE 8/01/2019

REGISTERED PROFESSIONAL ENGINEER — No. EXP. CIVIL — STATE OF CALIFORNIA

Metro

LOS ANGELES COUNTY
METROPOLITAN TRANSPORTATION AUTHORITY

HDR ENGINEERING
350 S. GRAND AVENUE
SUITE 2900
LOS ANGELES, CA 90071
(213) 239-5800

SUBMITTED: _____ PROJECT MANAGER

APPROVED: _____

LINK UNION STATION PROJECT

TRACK DRAWINGS
TRACK PROFILE
AMTRAK LEAD 19+00 TO AMTRAK LEAD 40+25.14

CONTRACT NO
DRAWING NO TP-108
REV
SCALE VERT: 1"=10'
SHEET NO 14

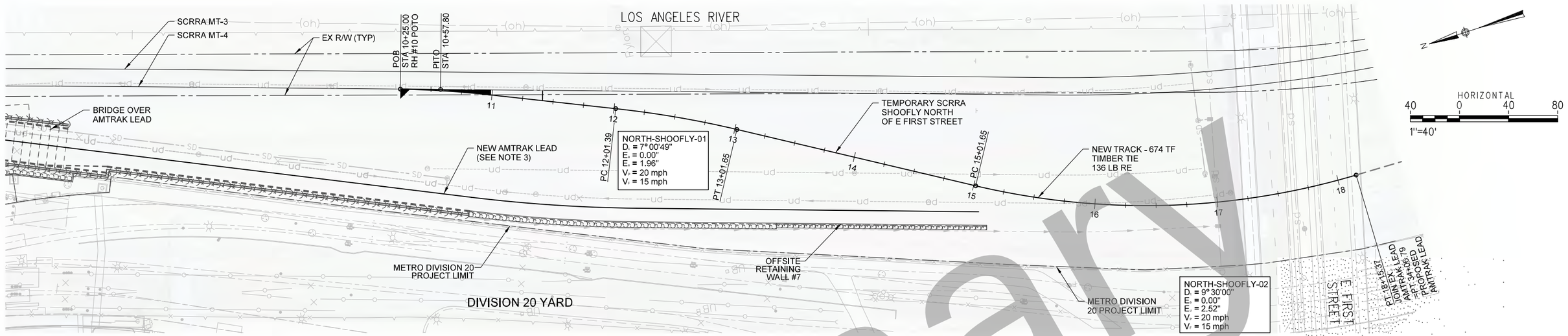

PLAN

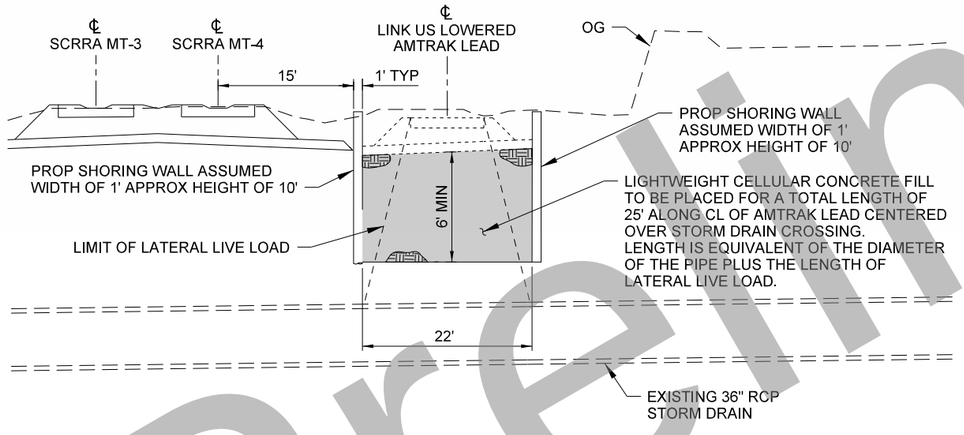

1 TP-109 ALISO STREET STORM DRAIN PROTECTION - SOIL REPLACEMENT

NO SCALE

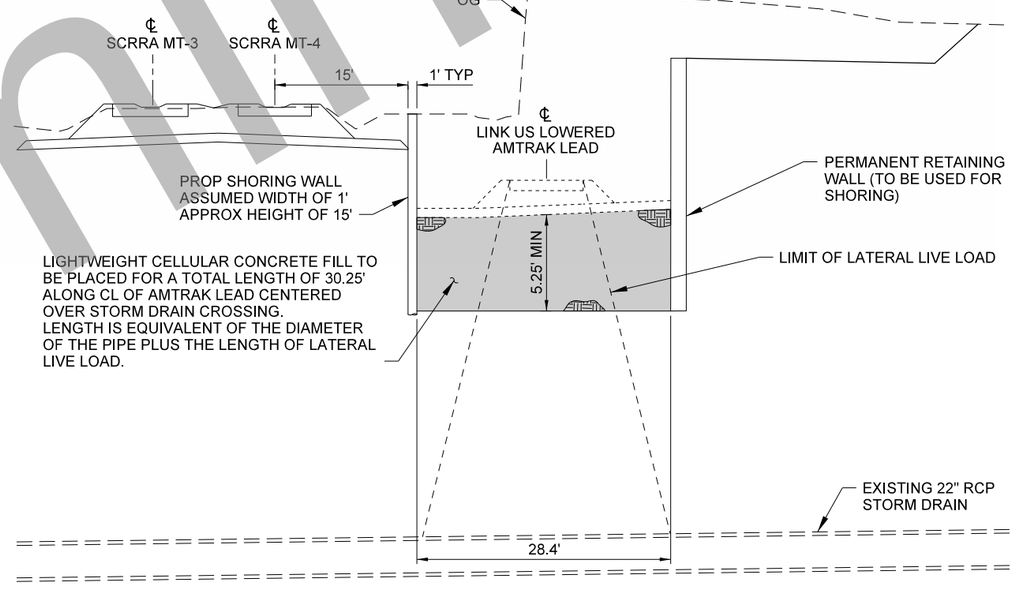

2 TP-109 COMMERCIAL STREET STORM DRAIN PROTECTION - SOIL REPLACEMENT

NO SCALE

NOTES:

1. PROPOSED TEMPORARY SHOOFLY NORTH OF E FIRST STREET TO ALLOW OFFLINE MODIFICATIONS TO EX. AMTRAK LEAD
2. PROPOSED AMTRAK LEAD BRIDGE AND OFF-SITE RETAINING WALL #7 SHOWN TO DEMONSTRATE POTENTIAL CONSTRUCTION ACTIVITIES DURING OPERATION OF NORTH SHOOFLY
3. PORTION OF NEW AMTRAK LEAD SHOWN REPRESENTS LIMITS OF NEW CONSTRUCTION WHILE TEMPORARY NORTH SHOOFLY IS IN PLACE (SEE SC-009). NEW AMTRAK LEAD TO CONNECT TO FINAL ALIGNMENT SOUTH OF E FIRST STREET FOLLOWING REMOVAL OF NORTH SHOOFLY.
4. DIMENSIONS SHOWN IN STORM DRAIN PROTECTION DETAILS ARE APPROXIMATE.
5. CONTRACTOR TO PROVIDE ANY SHORING AND EXCAVATION DESIGN REQUIRED TO EXCAVATE AND CONSTRUCT THE SOIL REPLACEMENT

35% DESIGN PLANS
NOT FOR CONSTRUCTION

Original plan submittal made in Aug. 2019

THE PREPARATION OF THIS DRAWING HAS BEEN FINANCED IN PART THROUGH A GRANT FROM THE U.S. DEPARTMENT OF TRANSPORTATION, FEDERAL TRANSIT ADMINISTRATION (FTA), UNDER THE FEDERAL TRANSIT ACT OF 1964, AS AMENDED, AND IN PART BY THE TAXES OF THE CITIZENS OF LOS ANGELES COUNTY AND OF THE STATE OF CALIFORNIA.

Rev No.	Date	Description
1	3/21	Plan added to set
2	12/21	
3	6/22	Updated notes and details for storm drain protection under Amtrak Lead

DESIGNED BY Z. MACDONELL
DRAWN BY M. SHAHIN
CHECKED BY A. MULL
IN CHARGE T. KIM
DATE 6/01/2022

REGISTERED PROFESSIONAL ENGINEER No. Exp. CIVIL STATE OF CALIFORNIA

Metro
LOS ANGELES COUNTY METROPOLITAN TRANSPORTATION AUTHORITY
HDR
HDR ENGINEERING
350 S. GRAND AVENUE SUITE 2900 LOS ANGELES, CA 90071 (213) 239-5800

SUBMITTED: _____ PROJECT MANAGER
APPROVED: _____

LINK UNION STATION PROJECT
TRACK DRAWINGS
TEMPORARY SCRRA SHOOFLY WITH AMTRAK LEAD MODIFICATIONS OFFLINE AND STORM DRAIN PROTECTION

CONTRACT NO
DRAWING NO TP-109
REV
SCALE HORIZ: 1"=40'
SHEET NO 15

Preliminary

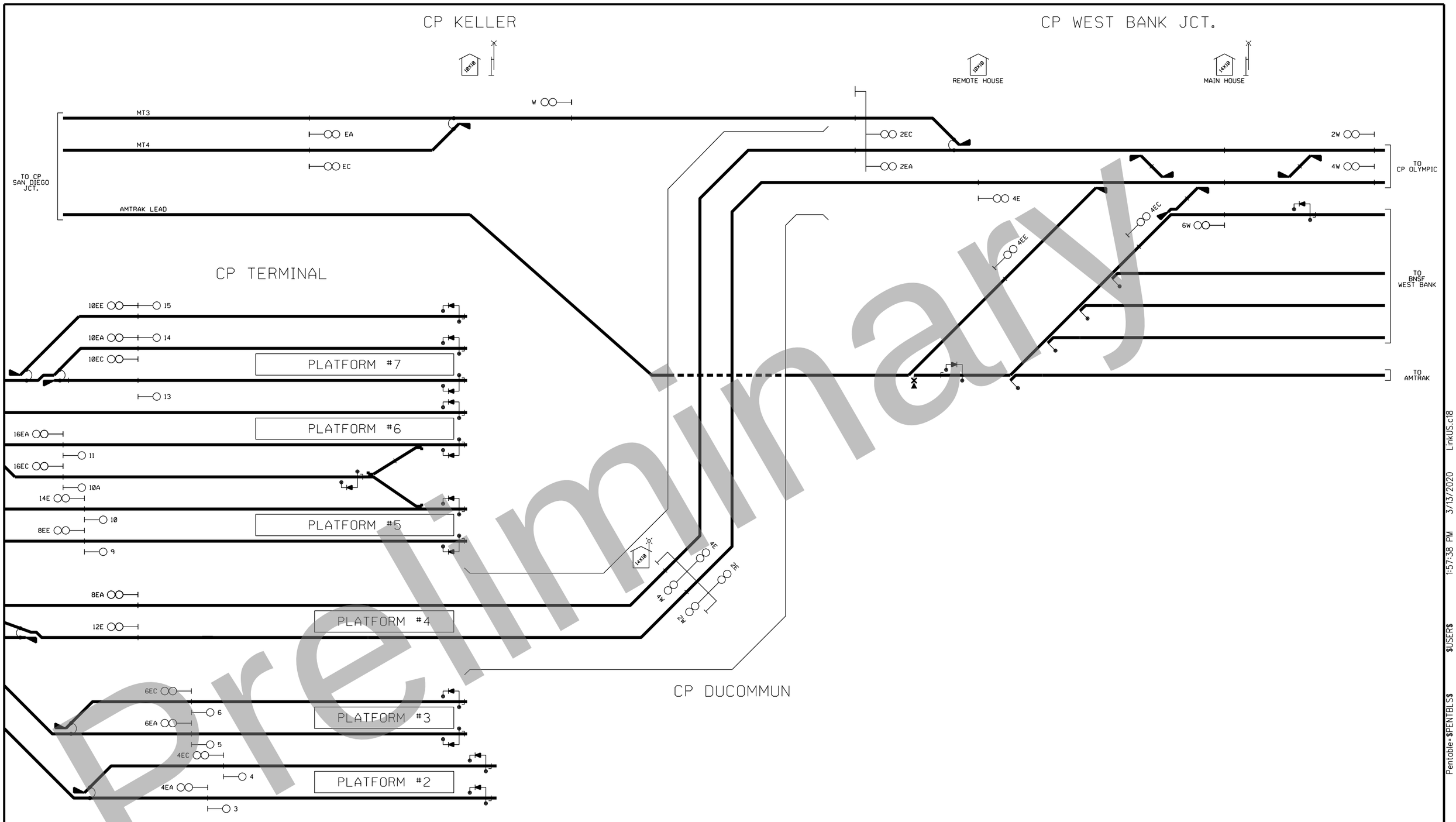

Preliminary

Original plan submittal made in Aug. 2019

THE PREPARATION OF THIS DRAWING HAS BEEN FINANCED IN PART THROUGH A GRANT FROM THE U.S. DEPARTMENT OF TRANSPORTATION, FEDERAL TRANSIT ADMINISTRATION (FTA), UNDER THE FEDERAL TRANSIT ACT OF 1964, AS AMENDED, AND IN PART BY THE TAXES OF THE CITIZENS OF LOS ANGELES COUNTY AND OF THE STATE OF CALIFORNIA.

Rev No.	Date	Description
1	3/21	Signal plan added to augment sequence drawings
2	12/21	
3	6/22	

DESIGNED BY A. PENA
DRAWN BY J. GONZALEZ
CHECKED BY D. HIRSCH
IN CHARGE J. PURCELL
DATE 3/05/2021

Metro
LOS ANGELES COUNTY METROPOLITAN TRANSPORTATION AUTHORITY
PRE PACIFIC RAILWAY ENTERPRISES, INC.
3560 University Avenue, Suite F
Riverside, CA 92501
TEL 951-784-4630/FAX 951-784-4635

SUBMITTED: _____ PROJECT MANAGER
APPROVED: _____

LINK UNION STATION PROJECT

PHASING PLANS
FINAL CONDITION
SHEET 18 OF 18

CONTRACT NO
DRAWING NO TL-028
REV
SCALE NOT TO SCALE
SHEET NO 16

Plot Driver= $PLTDRV$$ Pentable= $PENTBL$$ $USER$$ 1:57:38 PM 3/13/2020 LinkUS.ctb

LEGEND:

- TCE
- PROPERTY IMPACT
- LIMITS OF STREET VACATION
- (XX) PARCEL DESIGNATION
- RIGHT OF WAY / PROPERTY LINE

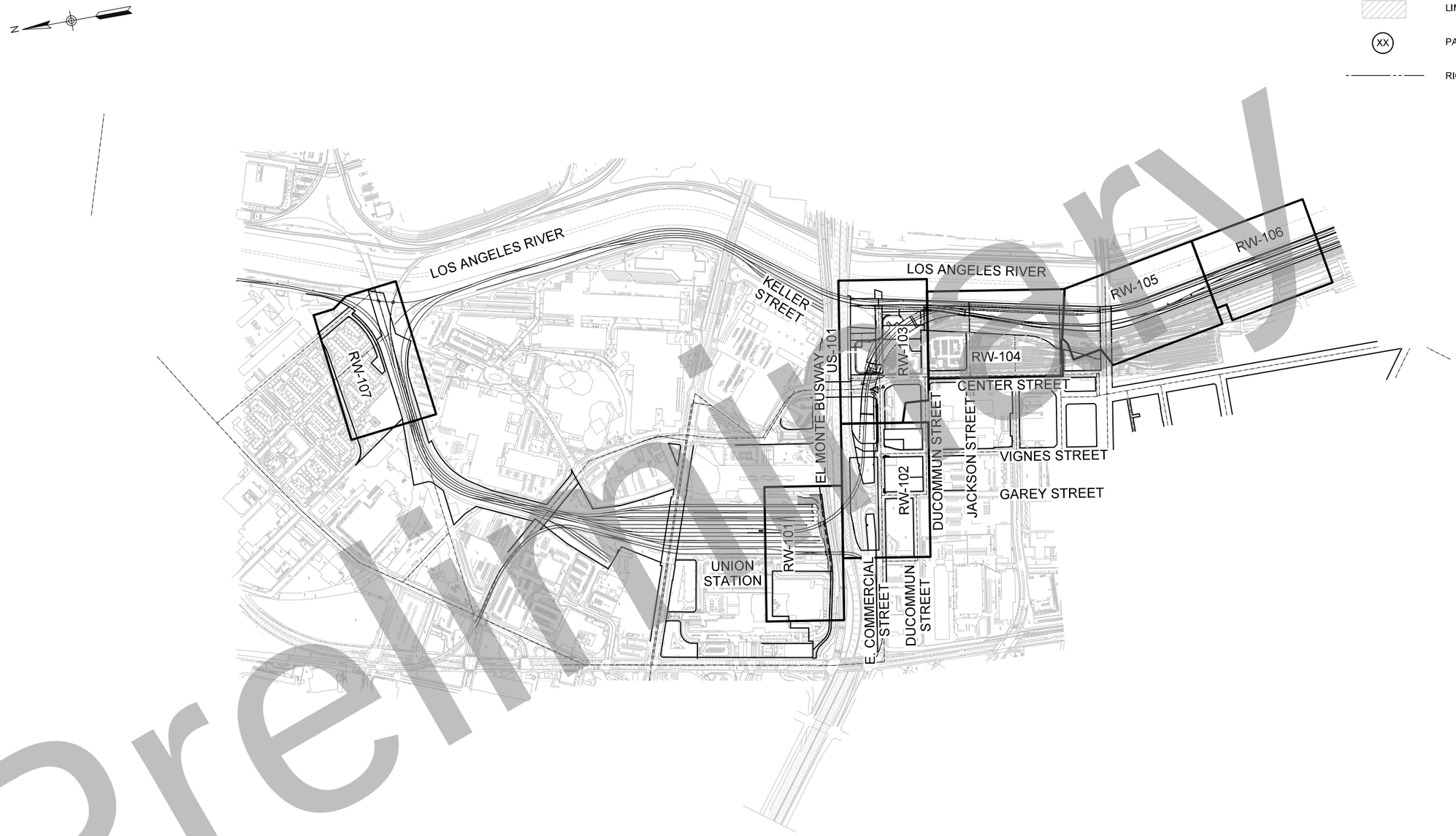

Preliminary

35% DESIGN PLANS
NOT FOR CONSTRUCTION

Original plan submittal made in Aug. 2019

Rev No.	Date	Description
1	3/21	
2	12/21	
3	6/22	

THE PREPARATION OF THIS DRAWING HAS BEEN FINANCED IN PART THROUGH A GRANT FROM THE U.S. DEPARTMENT OF TRANSPORTATION, FEDERAL TRANSIT ADMINISTRATION (FTA), UNDER THE FEDERAL TRANSIT ACT OF 1964, AS AMENDED, AND IN PART BY THE TAXES OF THE CITIZENS OF LOS ANGELES COUNTY AND OF THE STATE OF CALIFORNIA.

DESIGNED BY: K. WARFIELD
DRAWN BY: O. MAUSS
CHECKED BY: M. COOLEY
IN CHARGE: T. KIM
DATE: 8/01/2019

REGISTERED PROFESSIONAL ENGINEER — No. ____ Exp. ____ CIVIL — STATE OF CALIFORNIA

Metro
LOS ANGELES COUNTY METROPOLITAN TRANSPORTATION AUTHORITY
HDR
HDR ENGINEERING
350 S. GRAND AVENUE
SUITE 2900
LOS ANGELES, CA 90071
(213) 239-5800

SUBMITTED: _____ PROJECT MANAGER
APPROVED: _____

LINK UNION STATION PROJECT
RIGHT OF WAY NEEDS KEY MAP

CONTRACT NO
DRAWING NO: RW-002
REV
SCALE: NTS
SHEET NO: 17

Plot Driver=$PLTDRV$$ Pentable=PlotStamp.tbl USER = KWARFIEL 4:04:03 PM 3/1/2022 $FILE$

LEGEND:

- TCE
- PROPERTY IMPACT
- LIMITS OF STREET VACATION
- (XX) PARCEL DESIGNATION
- RIGHT OF WAY / PROPERTY LINE

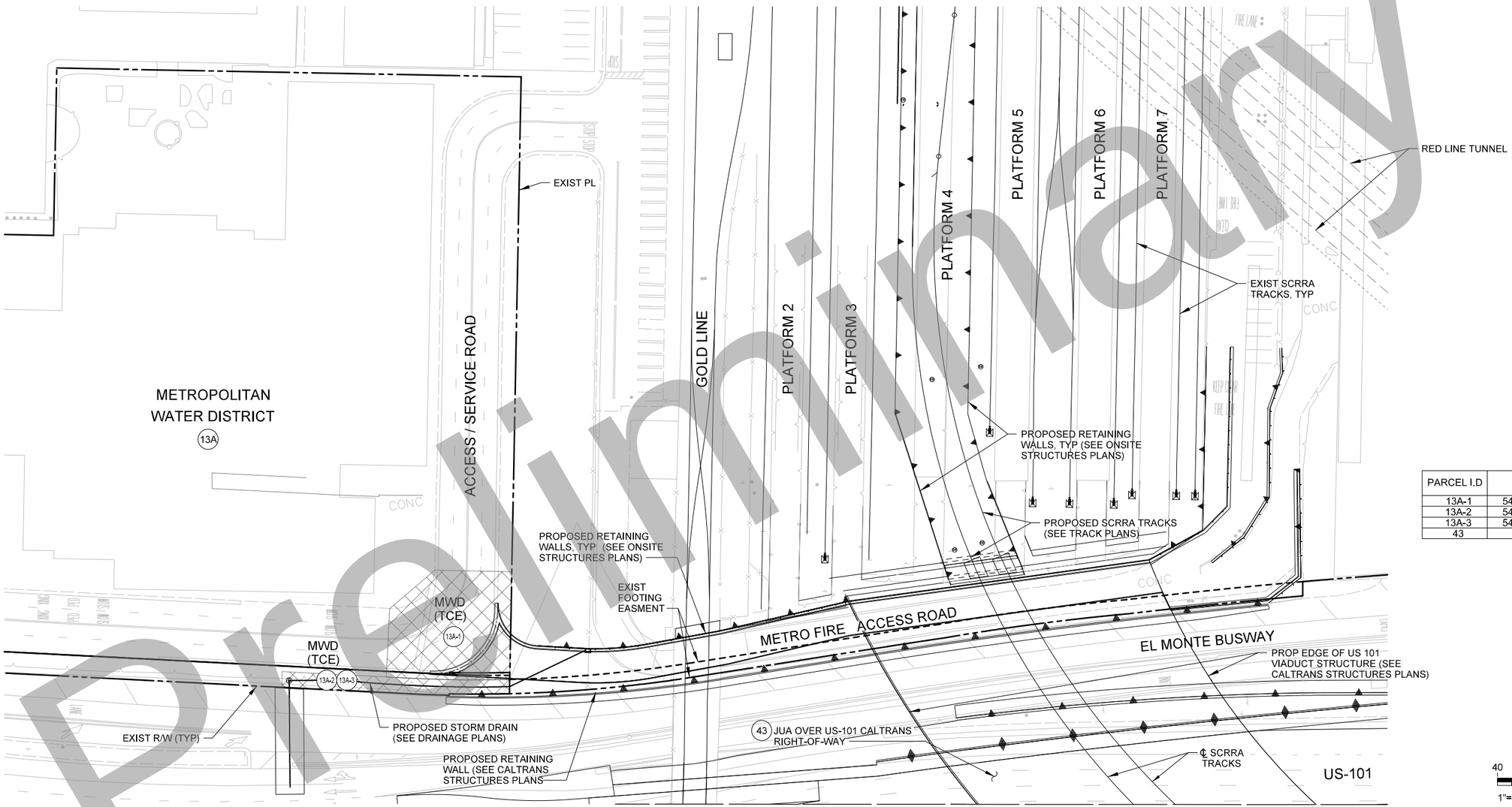

SEE DRAWING NO. RW-102

PARCEL I.D	APN	ACQUISITION TYPE	AREA (SF)
13A-1	5409-023-930	TCE	6,133
13A-2	5409-023-930	PROP SD EASMENT	-
13A-3	5409-023-930	TCE (SD)	1,719
43	-	JUA	-

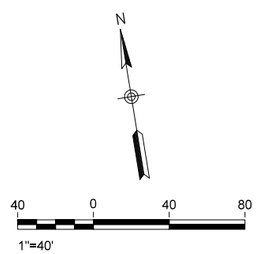

35% DESIGN PLANS
NOT FOR CONSTRUCTION

Preliminary

Original plan submittal made in Aug. 2019

THE PREPARATION OF THIS DRAWING HAS BEEN FINANCED IN PART THROUGH A GRANT FROM THE U.S. DEPARTMENT OF TRANSPORTATION, FEDERAL TRANSIT ADMINISTRATION (FTA), UNDER THE FEDERAL TRANSIT ACT OF 1964, AS AMENDED, AND IN PART BY THE TAXES OF THE CITIZENS OF LOS ANGELES COUNTY AND OF THE STATE OF CALIFORNIA.

Rev No.	Date	Description
1	3/21	
2	12/21	
3	6/22	

DESIGNED BY	K. WARFIELD
DRAWN BY	O. MAUSS
CHECKED BY	M. COOLEY
IN CHARGE	T. KIM
DATE	8/01/2019

REGISTERED PROFESSIONAL ENGINEER — No. ____ Exp. ____ CIVIL — STATE OF CALIFORNIA

Metro

LOS ANGELES COUNTY
METROPOLITAN TRANSPORTATION AUTHORITY

HDR
350 S. GRAND AVENUE
SUITE 2900
LOS ANGELES, CA 90071
(213) 239-5800

SUBMITTED: _____ PROJECT MANAGER

APPROVED: _____

LINK UNION STATION PROJECT

RIGHT OF WAY NEEDS MAP
SHEET 1 OF 7

CONTRACT NO	
DRAWING NO	RW-101
REV	
SCALE	1"=40'
SHEET NO	18

Plot Driver=$PLTDRV$$ Pentable=PlotStamp.tbl USER = KWARFIEL 6:18:28 PM 5/13/2020 $FILE$$

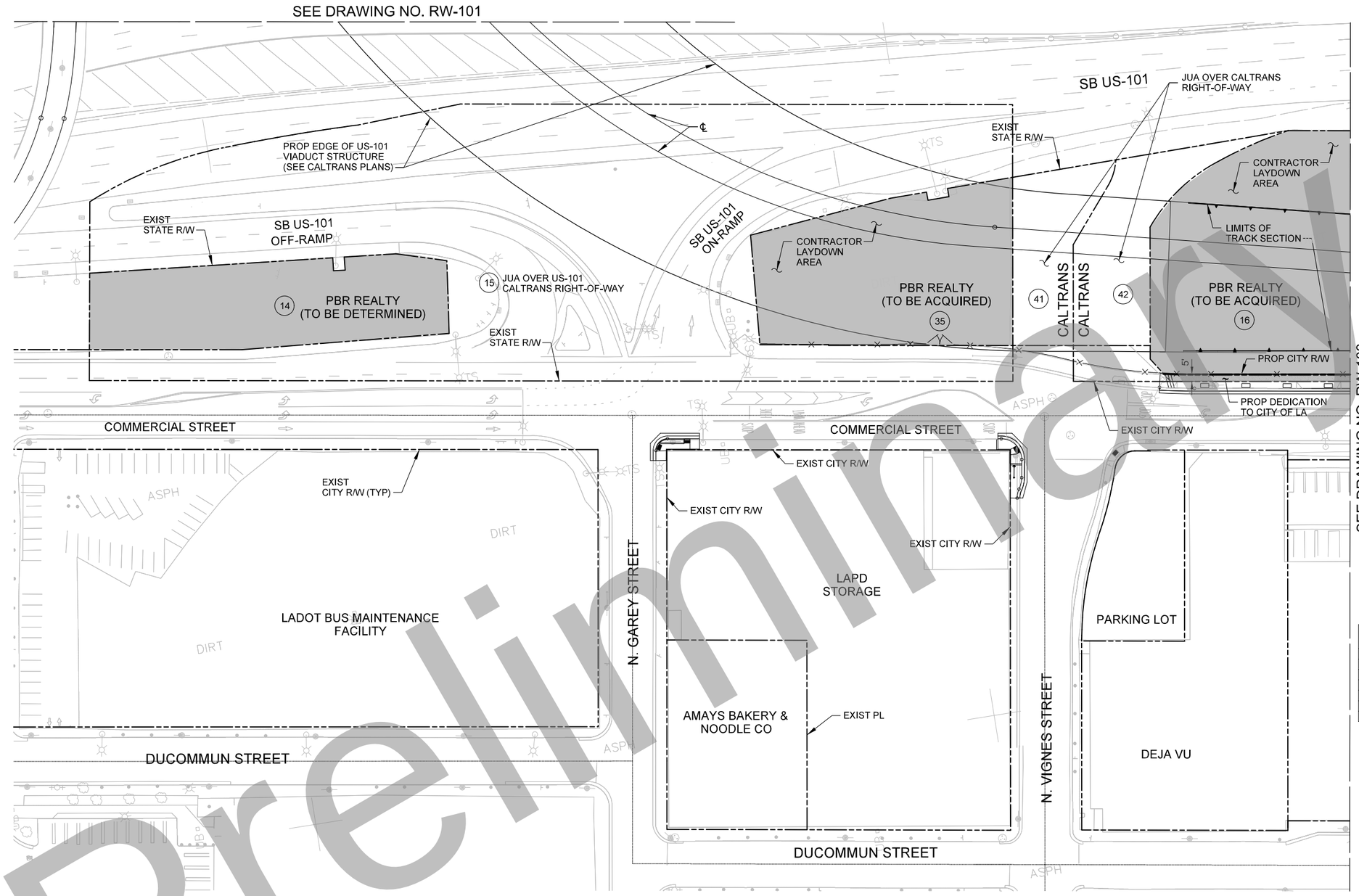

LEGEND:

- TCE
- PROPERTY IMPACT
- LIMITS OF STREET VACATION
- PROPERTY DEDICATION TO CITY OF LA
- (XX) PARCEL DESIGNATION
- RIGHT OF WAY / PROPERTY LINE
- PROP CITY OF LA R/W PRIVATE PROPERTY (SEE NOTE 1)

PARCEL I.D	APN	ACQUISITION TYPE	AREA (SF)
14.	5173-003-011	FULL TAKE (TBD)	15,573
15.	5173-003-900	JUA	-
16.	5173-018-001	FULL TAKE	58,919
21.	5173-003-002	NONE	14,058
35.	5173-003-012	FULL TAKE	19,122
41.	-	JUA	6,560
42.	-	JUA	9,844

N

40 0 40 80

1"=40'

35% DESIGN PLANS
NOT FOR CONSTRUCTION

Preliminary

Original plan submittal made in Aug. 2019

Rev No.	Date	Description
1	3/21	Updated to reflect Amay's property preservation and latest roadway improvements
2	12/21	
3	6/22	Updated to reflect latest roadway improvements

THE PREPARATION OF THIS DRAWING HAS BEEN FINANCED IN PART THROUGH A GRANT FROM THE U.S. DEPARTMENT OF TRANSPORTATION, FEDERAL TRANSIT ADMINISTRATION (FTA), UNDER THE FEDERAL TRANSIT ACT OF 1964, AS AMENDED, AND IN PART BY THE TAXES OF THE CITIZENS OF LOS ANGELES COUNTY AND OF THE STATE OF CALIFORNIA.

DESIGNED BY K. WARFIELD
DRAWN BY O. MAUSS
CHECKED BY M. COOLEY
IN CHARGE T. KIM
DATE [redacted]

REGISTERED PROFESSIONAL ENGINEER — No. ____ Exp. ____ CIVIL — STATE OF CALIFORNIA

Metro
LOS ANGELES COUNTY METROPOLITAN TRANSPORTATION AUTHORITY
HDR
350 S. GRAND AVENUE
SUITE 2900
LOS ANGELES, CA 90071
(213) 239-5800

SUBMITTED: _____ PROJECT MANAGER

APPROVED: _____

LINK UNION STATION PROJECT

RIGHT OF WAY NEEDS MAP
SHEET 2 OF 7

CONTRACT NO

DRAWING NO RW-102 | REV

SCALE 1"=40'

SHEET NO 19

Plot Driver=$PLTDRV$$ Pentable=PlotStamp.tbl USER = KWARFIEL 8:53:45 AM 5/26/2022 $FILE$

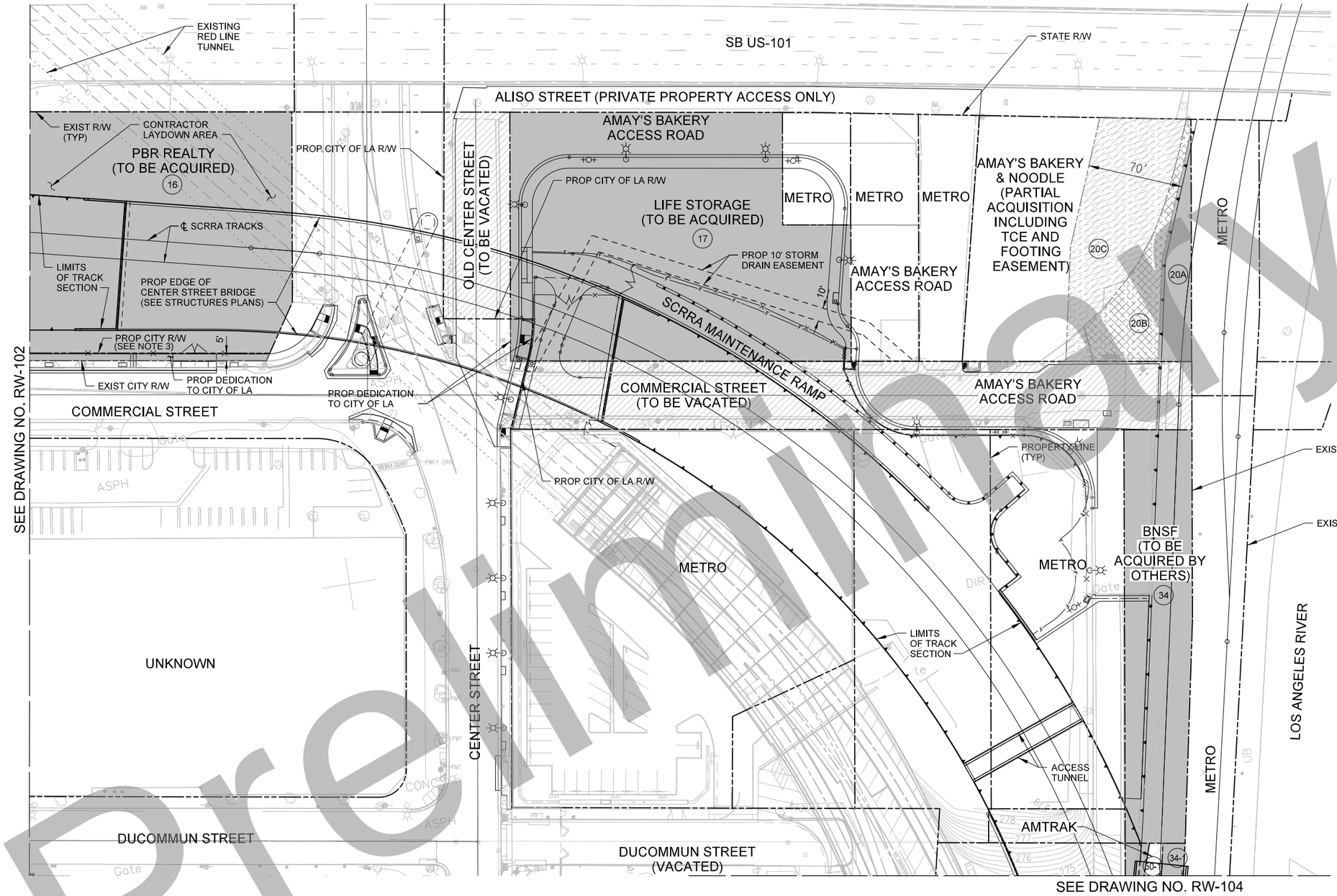

LEGEND:

- TCE
- PROPERTY IMPACT
- LIMITS OF STREET VACATION (SEE NOTE 1)
- PROPERTY DEDICATION TO CITY OF LA
- PERMANATE TIE-BACK EASEMENT (SEE NOTE 2)
- (XX) PARCEL DESIGNATION
- RIGHT OF WAY / PROPERTY LINE
- PROP CITY OF LA R/W PRIVATE PROPERTY (SEE NOTE 1)

NOTE:
1. ANY EXISTING PUBLIC UTILITY OR STORM DRAIN INFRASTRUCTURE TO BE PROTECTED IN PLACE OR CONSTRUCTED A PART OF PROJECT WITHIN THE VACATED SEGMENT OF COMMERCIAL STREET AND OLD CENTER STREET WILL REQUIRE EASEMENTS OR SIMILAR AGREEMENTS BETWEEN OWNERS AND METRO.
2. RETAINING WALL TIEBACK EASEMENT INCLUDES 20C AND 20B AREAS.
3. EASEMENT NEEDS FOR VISTA SWITCH TO BE DETERMINED BASED ON FUTURE COORDINATION BETWEEN LADWP AND METRO

PARCEL I.D.	APN	ACQUISITION TYPE	AREA (SF)
16.	5173-018-001	FULL TAKE	58,919
17.	5173-019-006	FULL TAKE	41,932
20A.	5173-019-011	PART TAKE	2,745
20B.	5173-019-011	TCE/PERMANENT MAINT. EASE.	3,778*
20C.	5173-019-011	TIEBACK EASE	12,220*
34.	5173-020-813	FULL TAKE	15,068
34-1.	5173-021-811	PART TAKE (BNSF)	8,314
50-1.		TCE (AMTRAK)	6,801

* SEE NOTE 2

N

40 0 40 80

1"=40'

35% DESIGN PLANS
NOT FOR CONSTRUCTION

Preliminary

Original plan submittal made in Aug. 2019

Rev No.	Date	Description
1	3/21	Updated to reflect Amay's property preservation and latest roadway improvements
2	12/21	
3	6/22	Updated to show modified intersection, updated LA City Right-of-Way and access road design

THE PREPARATION OF THIS DRAWING HAS BEEN FINANCED IN PART THROUGH A GRANT FROM THE U.S. DEPARTMENT OF TRANSPORTATION, FEDERAL TRANSIT ADMINISTRATION (FTA), UNDER THE FEDERAL TRANSIT ACT OF 1964, AS AMENDED, AND IN PART BY THE TAXES OF THE CITIZENS OF LOS ANGELES COUNTY AND OF THE STATE OF CALIFORNIA.

DESIGNED BY K. WARFIELD
DRAWN BY O. MAUSS
CHECKED BY M. COOLEY
IN CHARGE T. KIM
DATE

REGISTERED PROFESSIONAL ENGINEER — No. — EXP. — CIVIL — STATE OF CALIFORNIA

Metro
LOS ANGELES COUNTY METROPOLITAN TRANSPORTATION AUTHORITY
HDR
350 S. GRAND AVENUE
SUITE 2900
LOS ANGELES, CA 90071
(213) 239-5800

SUBMITTED: _____ PROJECT MANAGER

APPROVED: _____

LINK UNION STATION PROJECT
RIGHT OF WAY NEEDS MAP
SHEET 3 OF 7

CONTRACT NO
DRAWING NO RW-103 REV
SCALE 1"=40'
SHEET NO 20

Plot Driver=$PLTDRVS$ Pentable=PlotStamp.tbl USER = KWARFIEL 1:42:08 PM 4/15/2022 $FILE$

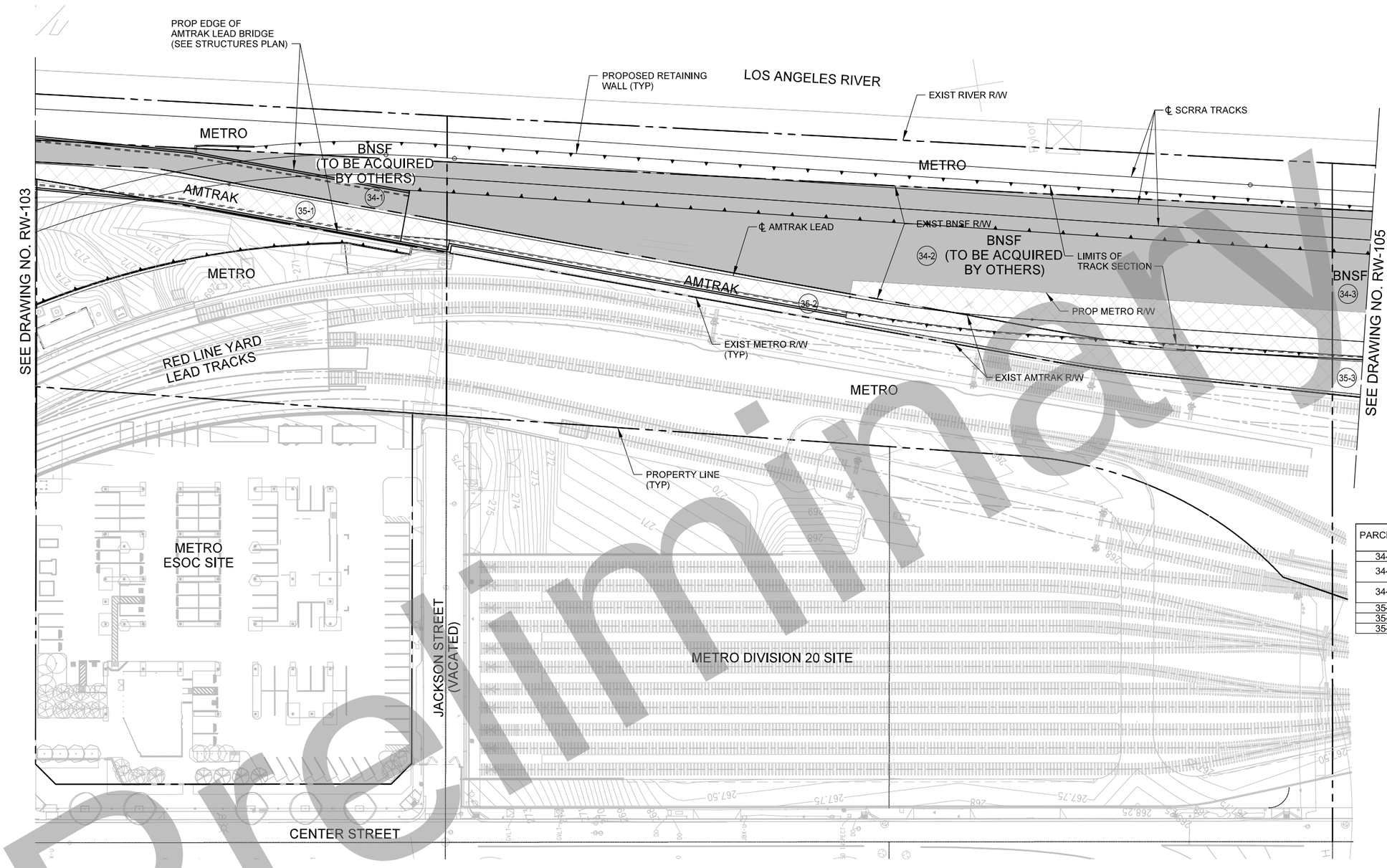

LEGEND:

- TCE
- PROPERTY IMPACT
- LIMITS OF STREET VACATION
- (XX) PARCEL DESIGNATION
- RIGHT OF WAY / PROPERTY LINE

PARCEL I.D	APN	ACQUISITION TYPE	AREA (SF)
34-1.	5173-021-811	FULL TAKE	8,314
34-2.	5173-022-808	TCE	9,863
	5173-022-808	PART TAKE	44,513
34-3.	5173-023-805	TCE	19,817
	5173-023-805	PART TAKE	21,797
35-1.		TCE	6,801
35-2.		TCE	14,960
35-3.		TCE	9,653

N

40 0 40 80

1"=40'

35% DESIGN PLANS
NOT FOR CONSTRUCTION

Preliminary

Original plan submittal made in Aug. 2019

Rev No.	Date	Description
1	3/21	Updated to reflect modified Ret Wall 9 design and shorter Amtrak lead bridge
2	12/21	
3	6/22	Updated to show limits of Amtrak property along existing lead

THE PREPARATION OF THIS DRAWING HAS BEEN FINANCED IN PART THROUGH A GRANT FROM THE U.S. DEPARTMENT OF TRANSPORTATION, FEDERAL TRANSIT ADMINISTRATION (FTA), UNDER THE FEDERAL TRANSIT ACT OF 1964, AS AMENDED, AND IN PART BY THE TAXES OF THE CITIZENS OF LOS ANGELES COUNTY AND OF THE STATE OF CALIFORNIA.

DESIGNED BY K. WARFIELD
DRAWN BY O. MAUSS
CHECKED BY M. COOLEY
IN CHARGE T. KIM
DATE 6/01/2022

REGISTERED PROFESSIONAL ENGINEER — No. ____ Exp. ____ CIVIL — STATE OF CALIFORNIA

Metro
LOS ANGELES COUNTY METROPOLITAN TRANSPORTATION AUTHORITY
HDR
350 S. GRAND AVENUE
SUITE 2900
LOS ANGELES, CA 90071
(213) 239-5800

SUBMITTED: _____ PROJECT MANAGER

APPROVED: _____

LINK UNION STATION PROJECT

RIGHT OF WAY NEEDS MAP SHEET 4 OF 7

CONTRACT NO

DRAWING NO RW-104 REV

SCALE 1"=40'

SHEET NO 21

Plot Driver=$PLTDRV$$ Pentable=PlotStamp.tbl USER = KWARFIEL 4:07:28 PM 3/3/2022 $FILE$

LEGEND:

- TCE
- PROPERTY IMPACT
- LIMITS OF STREET VACATION
- (XX) PARCEL DESIGNATION
- RIGHT OF WAY / PROPERTY LINE

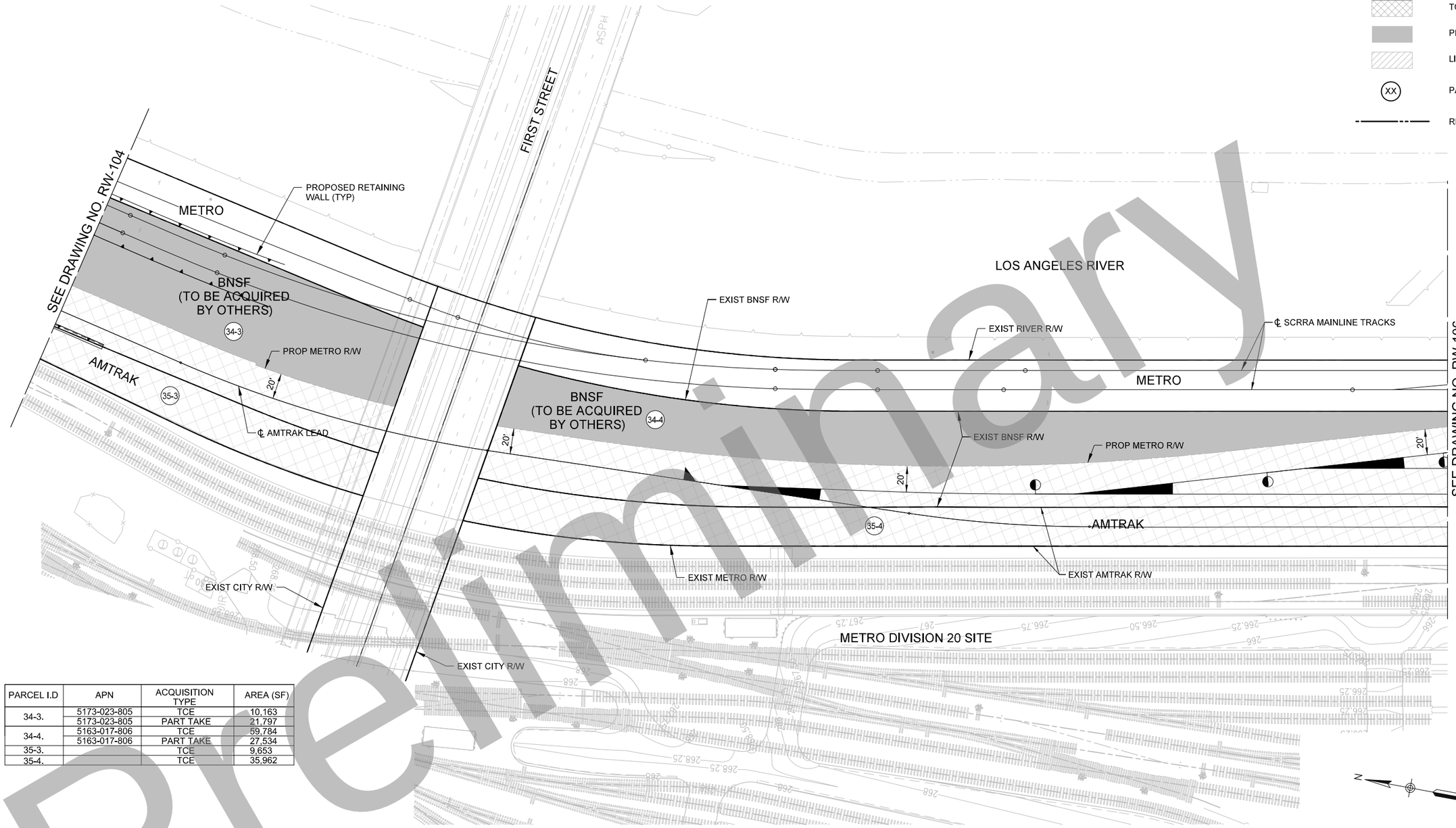

PARCEL I.D	APN	ACQUISITION TYPE	AREA (SF)
34-3.	5173-023-805	TCE	10,163
	5173-023-805	PART TAKE	21,797
34-4.	5163-017-806	TCE	59,784
	5163-017-806	PART TAKE	27,534
35-3.		TCE	9,653
35-4.		TCE	35,962

40 0 40 80

1"=40'

35% DESIGN PLANS
NOT FOR CONSTRUCTION

Preliminary

Original plan submittal made in Aug. 2019

THE PREPARATION OF THIS DRAWING HAS BEEN FINANCED IN PART THROUGH A GRANT FROM THE U.S. DEPARTMENT OF TRANSPORTATION, FEDERAL TRANSIT ADMINISTRATION (FTA), UNDER THE FEDERAL TRANSIT ACT OF 1964, AS AMENDED, AND IN PART BY THE TAXES OF THE CITIZENS OF LOS ANGELES COUNTY AND OF THE STATE OF CALIFORNIA.

Rev No.	Date	Description
1	3/21	
2	12/21	
3	6/22	Updated to show limits of Amtrak property along existing lead

DESIGNED BY K. WARFIELD
DRAWN BY O. MAUSS
CHECKED BY M. COOLEY
IN CHARGE T. KIM
DATE 6/01/2022

REGISTERED PROFESSIONAL ENGINEER — No. ____ EXP. ____ CIVIL — STATE OF CALIFORNIA

Metro

LOS ANGELES COUNTY
METROPOLITAN TRANSPORTATION AUTHORITY

HDR
350 S. GRAND AVENUE
SUITE 2900
LOS ANGELES, CA 90071
(213) 239-9800

SUBMITTED: _____ PROJECT MANAGER

APPROVED: _____

LINK UNION STATION PROJECT

RIGHT OF WAY NEEDS MAP SHEET 5 OF 7

CONTRACT NO

DRAWING NO RW-105 | REV

SCALE 1"=40'

SHEET NO 22

Plot Driver=$PLTDRVS$ Pentable=PlotStamp.tbl USER = KWARFIEL 4:09:57 PM 3/3/2022 $FILE$

LEGEND:

- TCE
- PROPERTY IMPACT
- LIMITS OF STREET VACATION
- (XX) PARCEL DESIGNATION
- RIGHT OF WAY / PROPERTY LINE

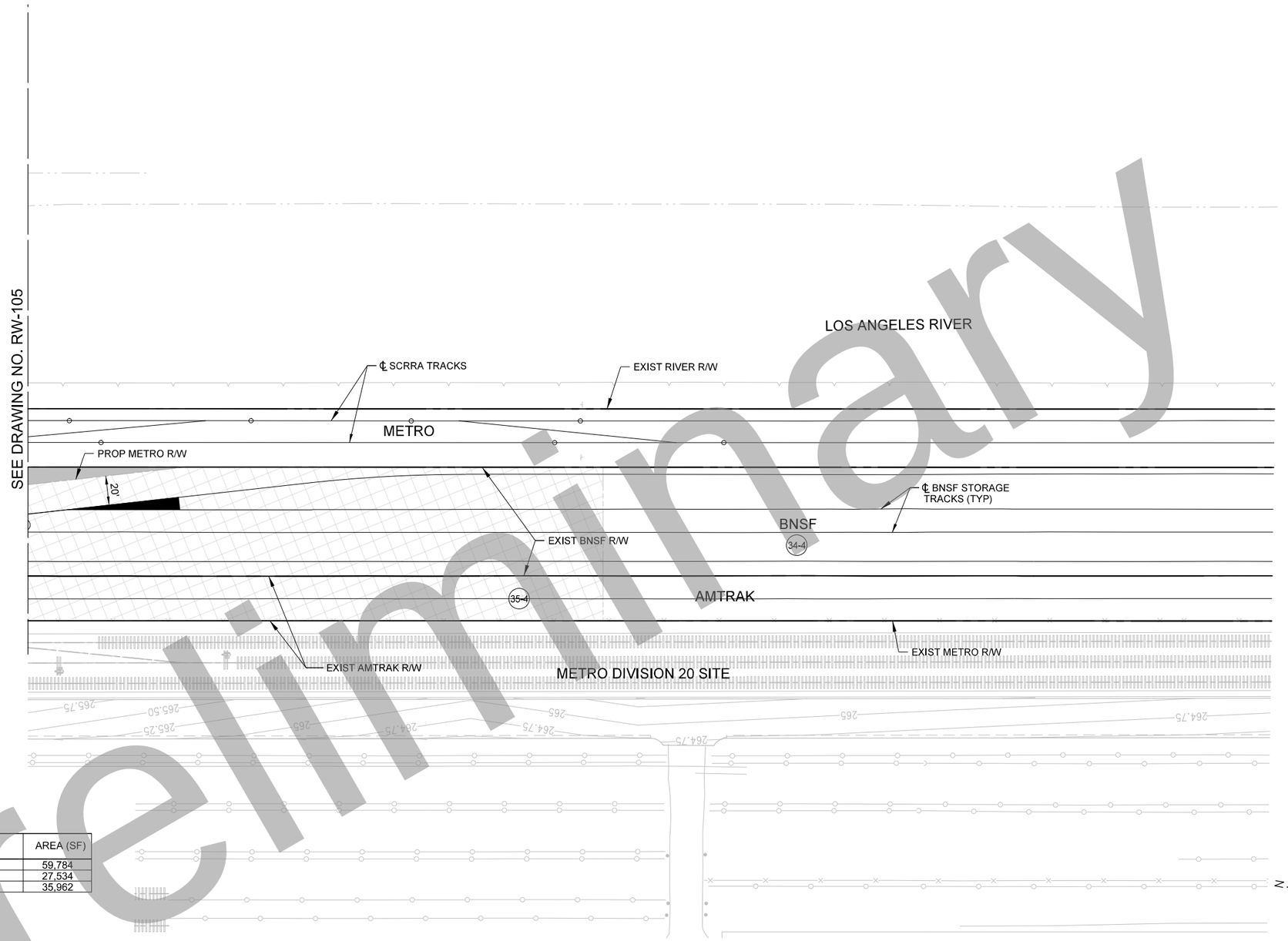

PARCEL I.D	APN	ACQUISITION TYPE	AREA (SF)
34-4.	5163-017-806	TCE	59,784
	5163-017-806	PART TAKE	27,534
35-4.		TCE	35,962

35% DESIGN PLANS
NOT FOR CONSTRUCTION

Original plan submittal made in Aug. 2019

THE PREPARATION OF THIS DRAWING HAS BEEN FINANCED IN PART THROUGH A GRANT FROM THE U.S. DEPARTMENT OF TRANSPORTATION, FEDERAL TRANSIT ADMINISTRATION (FTA), UNDER THE FEDERAL TRANSIT ACT OF 1964, AS AMENDED, AND IN PART BY THE TAXES OF THE CITIZENS OF LOS ANGELES COUNTY AND OF THE STATE OF CALIFORNIA.

Rev No.	Date	Description
1	3/21	
2	12/21	
3	6/22	Updated to show limits of Amtrak property along existing lead

DESIGNED BY K. WARFIELD
DRAWN BY O. MAUSS
CHECKED BY M. COOLEY
IN CHARGE T. KIM
DATE 6/01/2022

REGISTERED PROFESSIONAL ENGINEER — No. ____ Exp. ____ CIVIL — STATE OF CALIFORNIA

Metro
LOS ANGELES COUNTY
METROPOLITAN TRANSPORTATION AUTHORITY
HDR
350 S. GRAND AVENUE
SUITE 2900
LOS ANGELES, CA 90071
(213) 239-5800

SUBMITTED: _____ PROJECT MANAGER
APPROVED: _____

LINK UNION STATION PROJECT
RIGHT OF WAY NEEDS MAP SHEET 6 OF 7

CONTRACT NO
DRAWING NO RW-106
REV
SCALE 1"=40'
SHEET NO 23

Plot Driver=$PLTDRV$$ Pentable=PlotStamp.tbl USER = KWARFIEL 09:42:07 03/02/22 $FILE$
Preliminary

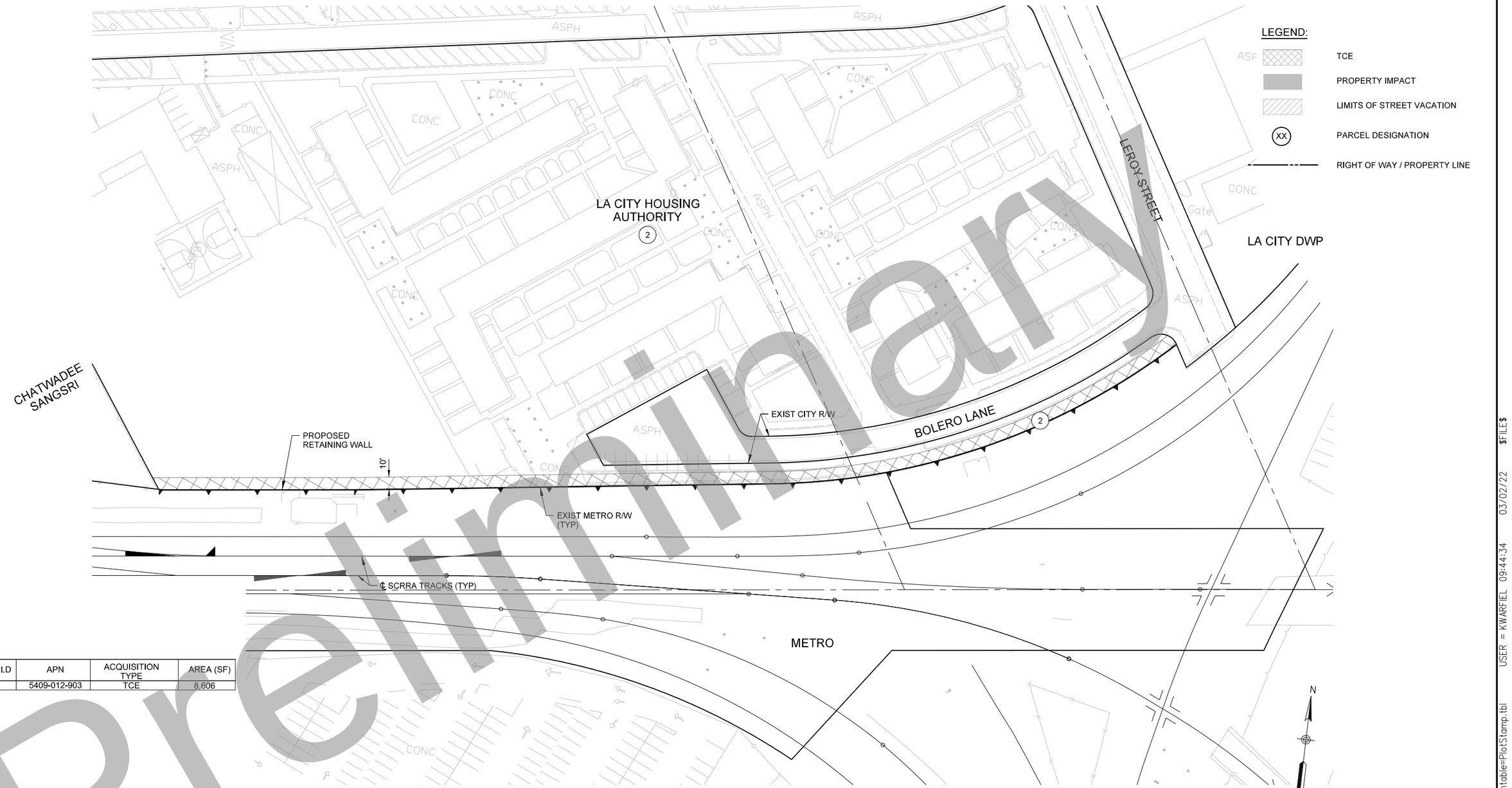

PARCEL I.D	APN	ACQUISITION TYPE	AREA (SF)
2.	5409-012-903	TCE	8,606

35% DESIGN PLANS
NOT FOR CONSTRUCTION

Original plan submittal made in Aug. 2019

Preliminary

THE PREPARATION OF THIS DRAWING HAS BEEN FINANCED IN PART THROUGH A GRANT FROM THE U.S. DEPARTMENT OF TRANSPORTATION, FEDERAL TRANSIT ADMINISTRATION (FTA), UNDER THE FEDERAL TRANSIT ACT OF 1964, AS AMENDED, AND IN PART BY THE TAXES OF THE CITIZENS OF LOS ANGELES COUNTY AND OF THE STATE OF CALIFORNIA.

Rev No.	Date	Description
1	3/21	
2	12/21	
3	6/22	Updated to reflect transfer of ownership in railroad R/W to Metro

DESIGNED BY K. WARFIELD
DRAWN BY O. MAUSS
CHECKED BY M. COOLEY
IN CHARGE T. KIM
DATE 6/01/2022

REGISTERED PROFESSIONAL ENGINEER — No. ____ Exp. ____ CIVIL — STATE OF CALIFORNIA

Metro
LOS ANGELES COUNTY
METROPOLITAN TRANSPORTATION AUTHORITY

HDR
350 S. GRAND AVENUE
SUITE 2900
LOS ANGELES, CA 90071
(213) 239-5800

SUBMITTED: _____ PROJECT MANAGER
APPROVED: _____

LINK UNION STATION PROJECT
RIGHT OF WAY NEEDS MAP
SHEET 7 OF 7

CONTRACT NO
DRAWING NO RW-107
REV
SCALE 1"=40'
SHEET NO 24

Plot Driver=$PLTDRV$$ Pentable=PlotStamp.tbl USER = KWARFIEL 09:44:34 03/02/22 $FILE$

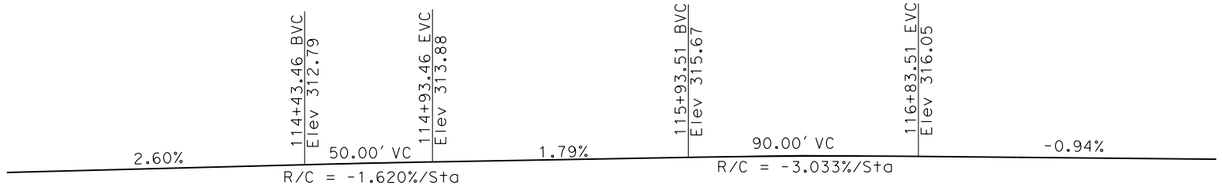

PROFILE GRADE - TOR ℄ "RR RT1 (PHASE A)" LINE

NO SCALE

LEGEND:

- ⊕ Point of minimum vertical clearance
- ⇨ Direction of traffic
- Closure pour (4'-0")
- Deck drain inlet (Type C drain)
- ← Drainage direction

NOTES:

1. Place anchored temporary railing Type K
2. Place AC overlay for deck drainage
3. Place PC/RC Backwall panel with fence
- (A) Paint bridge name
- (B) Paint bridge number
- (D) Concrete Barrier (Type 842)
- (E) Concrete Ballast Guard
- (F) Chain Link Railing (Type 7)

CURVE DATA

(A) ℄ Const LINE	(B) ℄ Const LINE	(C) ℄ Const LINE	(D) "RR RT1 (PHASE A)" LINE
R = 696.82'	R = 656.00'	R = 343.52'	R = 546.44'
Δ = 27°59'16"	Δ = 20°41'00"	Δ = 20°13'22"	Δ = 91°21'14"
T = 173.66'	T = 119.71'	T = 61.26'	T = 559.51'
L = 340.38'	L = 236.81'	L = 121.25'	L = 871.26'

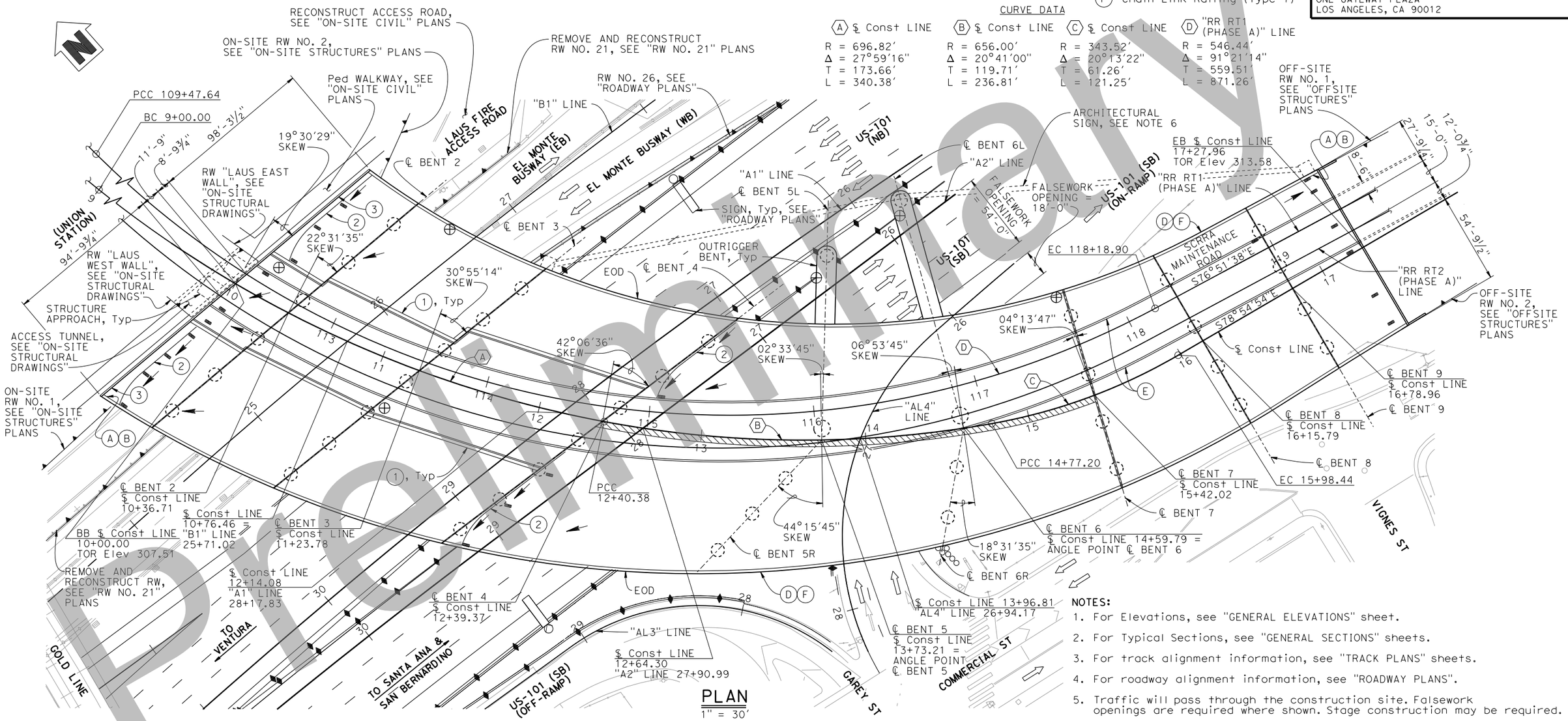

PLAN

1" = 30'

NOTES:

1. For Elevations, see "GENERAL ELEVATIONS" sheet.
2. For Typical Sections, see "GENERAL SECTIONS" sheets.
3. For track alignment information, see "TRACK PLANS" sheets.
4. For roadway alignment information, see "ROADWAY PLANS".
5. Traffic will pass through the construction site. Falsework openings are required where shown. Stage construction may be required.
6. For Architectural Details, see "Architectural Drawings".

TYPE SELECTION PLANS - NOT FOR CONSTRUCTION

Dist	COUNTY	ROUTE	POST MILES TOTAL PROJECT	SHEET No.	TOTAL SHEETS
07	LA	10S, 101	17.2/17.5, 0.4/0.7	20	34

REGISTERED CIVIL ENGINEER _____ DATE _____

PLANS APPROVAL DATE _____

REGISTERED PROFESSIONAL ENGINEER — KATIE L. HICKEY — No. C82783 — Exp. 9/30/20 — CIVIL — STATE OF CALIFORNIA

THE STATE OF CALIFORNIA OR ITS OFFICERS OR AGENTS SHALL NOT BE RESPONSIBLE FOR THE ACCURACY OR COMPLETENESS OF SCANNED COPIES OF THIS PLAN SHEET.

WKE, Inc.
1851 EAST FIRST STREET, SUITE 1400
SANTA ANA, CA 92705

METROPOLITAN TRANSPORTATION AUTHORITY
ONE GATEWAY PLAZA
LOS ANGELES, CA 90012

Preliminary

Original plan submittal made in Aug. 2019

Rev No.	Date	Description
1	3/21	Updated to show latest structural design per Caltrans-approved TSR
2	12/21	
3	6/22	

LOAD & RESISTANCE FACTOR DESIGN — LIVE LOADING: SEE "GENERAL NOTES" SHEET

LAYOUT — BY: K. Hickey — CHECKED: V. Trinh

SPECIFICATIONS — BY: X — PLANS AND SPECS COMPARED: X

PREPARED FOR THE STATE OF CALIFORNIA DEPARTMENT OF TRANSPORTATION

Dan Weddell
PROJECT ENGINEER

BRIDGE No. X
POST MILE 0.56

LAUS VIADUCT OVER US-101

GENERAL PLAN

DATE PLOTTED => 01-APR-2020 TIME PLOTTED => 10:50
FILE => zg-gp01-CMG.dgn USERNAME => TDoung
ORIGINAL SCALE IN INCHES FOR REDUCED PLANS 0 1 2 3

UNIT: X
PROJECT NUMBER & PHASE: X CONTRACT No.: X

DISREGARD PRINTS BEARING EARLIER REVISION DATES →

REVISION DATES				SHEET	OF
8/01/19	3/05/21			1	14

SHEET NO 25

Dist	COUNTY	ROUTE	POST MILES TOTAL PROJECT	SHEET No.	TOTAL SHEETS
07	LA	10S, 101	17.2/17.5, 0.4/0.7	21	34

REGISTERED CIVIL ENGINEER _____ DATE _____

PLANS APPROVAL DATE _____

REGISTERED PROFESSIONAL ENGINEER — KATIE L. HICKEY — No. C82783 — Exp. 9/30/20 — CIVIL — STATE OF CALIFORNIA

THE STATE OF CALIFORNIA OR ITS OFFICERS OR AGENTS SHALL NOT BE RESPONSIBLE FOR THE ACCURACY OR COMPLETENESS OF SCANNED COPIES OF THIS PLAN SHEET.

WKE, Inc.
1851 EAST FIRST STREET, SUITE 1400
SANTA ANA, CA 92705

METROPOLITAN TRANSPORTATION AUTHORITY
ONE GATEWAY PLAZA
LOS ANGELES, CA 90012

NOTES:

1. Not all columns shown for clarity.
2. Barriers on bridge not shown for clarity.
3. Not all utilities shown for clarity.

NOTES:

- (A) Paint bridge name
- (B) Paint bridge number
- (C) Paint bent number
- (G) Concrete Barrier (Type 60MGF)
- (H) Concrete Barrier (Type 60M)
- (J) Concrete Barrier (Type 60MD)
- (K) MGS

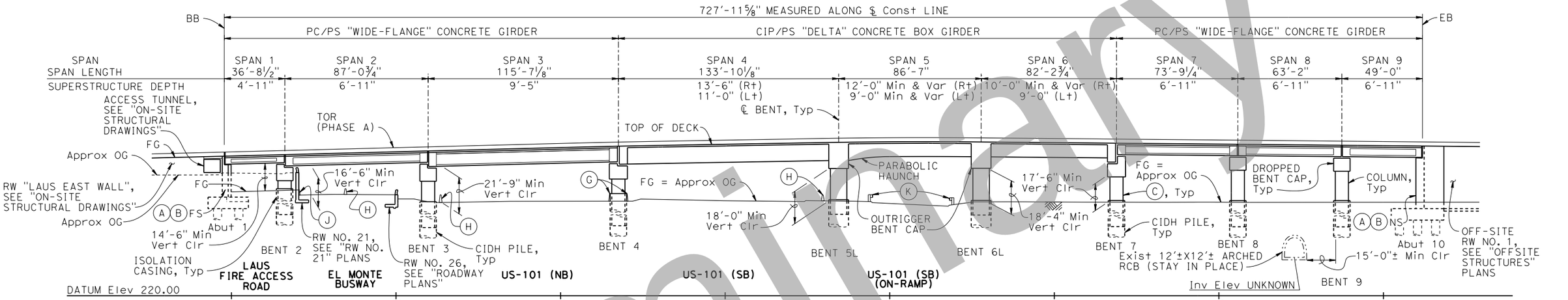

DEVELOPED ELEVATION - ALONG ℄ CONSTRUCTION LINE

1" = 30'

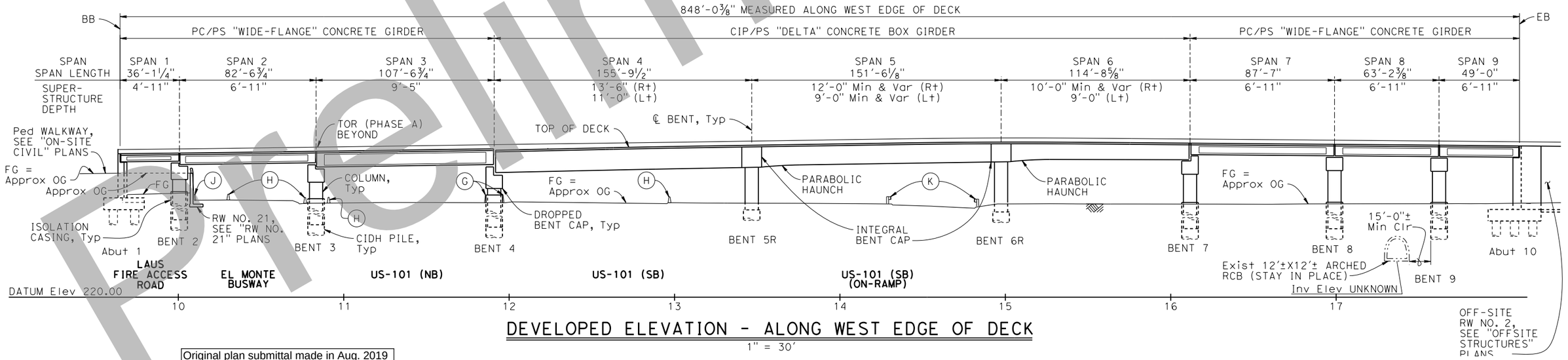

DEVELOPED ELEVATION - ALONG WEST EDGE OF DECK

1" = 30'

TYPE SELECTION PLANS - NOT FOR CONSTRUCTION

Preliminary

Original plan submittal made in Aug. 2019

Rev No.	Date	Description
1	3/21	Updated to show latest structural design per Caltrans-approved TSR
2	12/21	
3	6/22	

LOAD & RESISTANCE FACTOR DESIGN	LIVE LOADING: SEE "GENERAL NOTES" SHEET		
LAYOUT	BY: K. Hickey	CHECKED: V. Trinh	
SPECIFICATIONS	BY: X	PLANS AND SPECS COMPARED: X	

PREPARED FOR THE STATE OF CALIFORNIA DEPARTMENT OF TRANSPORTATION

Dan Weddell
PROJECT ENGINEER

BRIDGE No. X
POST MILE 0.56

LAUS VIADUCT OVER US-101

GENERAL ELEVATIONS

DATE PLOTTED => 01-APR-2020 TIME PLOTTED => 10:50
FILE => za-gp02-CMG.dgn USERNAME => TDoung
ORIGINAL SCALE IN INCHES FOR REDUCED PLANS 0 1 2 3

UNIT: X
PROJECT NUMBER & PHASE: X
CONTRACT No.: X

DISREGARD PRINTS BEARING EARLIER REVISION DATES →

REVISION DATES				SHEET	OF
8/01/19	3/05/21			2	14

GENERAL NOTES

A. SPECIFICATIONS

1. DESIGN: SCRRA GRADE SEPARATION GUIDELINES, APRIL 2016
SCRRA DESIGN CRITERIA MANUAL, NOVEMBER 2014
AREMA MANUAL FOR RAILWAY ENGINEERING, 2018
CHSTP AGREEMENT NO. : HSR 14-32 BOOK III, PART A.1, SUBPART 1 DESIGN CRITERIA REV. 3, FEBRUARY 2016
AASHTO LRFD BRIDGE DESIGN SPECIFICATIONS, 8TH EDITION WITH CALIFORNIA AMENDMENTS, NOVEMBER 2019
CALTRANS SEISMIC DESIGN CRITERIA VERSION 2.0, APRIL 2019

B. DESIGN LOADING:

1. DEAD LOAD: BALLAST: 8" MAX BELOW TIE
HMA: 4" MAX
RAIL: 200 LB/FT PER TRACK
RAILING: 60 LB/FT PER SIDE
FENCE: 50 LB/FT PER SIDE
ARCHITECTURAL CLADDING: 1,950 LB/FT PER SIDE
OCS POLES: 10,000 LB/POLE SPACED AT 100 FT PER TRACK
PERMANENT STEEL DECK FORMS: DECK DEAD LOAD BETWEEN PC/PS GIRDERS INCREASED BY 10%

2. LIVE LOAD: AREMA COOPER E-60 AND ALTERNATE LIVE LOAD
EMERGENCY WALKWAY LIVE LOAD OF 100 PSF
HIGH SPEED TRAIN LLV PER CHSRA DESIGN CRITERIA MANUAL
MAINTENANCE ROAD LIVE LOAD OF HL93 TRUCK

3. IMPACT: 2018 AREMA CHAPTER 8

4. DESIGN TRACK OPERATING SPEED: 20 MPH

5. SEISMIC LOADING:

5.1 RESPONSE SPECTRUM: CALTRANS SDC 2.0:
SOIL PROFILE: V_{S30} = 322 M/S
MAXIMUM MOMENT MAGNITUDE: M_{MAX} = 6.9
PEAK GROUND ACCELERATION (PGA): PGA = 0.690g

5.2 RESPONSE SPECTRUM: 2018 AREMA CHAPTER 9:
SITE COEFFICIENT = 1.2
DAMPING ADJUSTMENT FACTOR = 1.0
BASE ACCELERATION COEFFICIENTS:
0.253 LEVEL 1 (91 YEARS GROUND MOTION RETURN PERIOD)
0.376 LEVEL 2 (269 YEARS GROUND MOTION RETURN PERIOD)
0.809 LEVEL 3 (2199 YEARS GROUND MOTION RETURN PERIOD)

5.3 RESPONSE SPECTRUM: CHSRA DESIGN CRITERIA MANUAL:
a) MAXIMUM CONSIDERED EARTHQUAKE (MCE) - GROUND MOTIONS CORRESPONDING TO THE GREATER OF A PROBABILISTIC SPECTRUM BASED UPON A 10% PROBABILITY OF EXCEEDANCE IN 100 YEARS (A RETURN PERIOD OF 950 YEARS), AND A DETERMINISTIC SPECTRUM BASED UPON THE LARGEST MEDIAN RESPONSE RESULTING FROM THE MAXIMUM RUPTURE (CORRESPONDING TO THE MAXIMUM MOMENT MAGNITUDE) OF ANY FAULT IN THE VICINITY OF THE VIADUCT SITE.

b) OPERATING BASIS EARTHQUAKE (OBE) - GROUND MOTIONS CORRESPONDING TO A PROBABILISTIC SPECTRUM BASED UPON AN 86% PROBABILITY OF EXCEEDANCE IN 100 YEARS (A RETURN PERIOD OF 50 YEARS).

c) SOIL PROFILE: V_{S30} = 322 M/S
MAXIMUM MOMENT MAGNITUDE: M_{MAX} = 6.9
PEAK GROUND ACCELERATION (PGA): PGA = 0.669g (MCE)
0.159g (OBE)

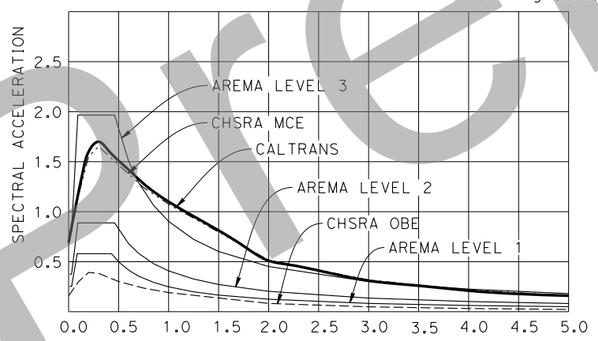

6. THERMAL FORCES: MEAN: 65°F
RISE: 35°F
FALL: 40°F

7. WIND: 50 PSF ON SUPERSTRUCTURE
300 PSF ON LIVE LOAD

8. OTHER: ALL OTHER APPLICABLE LOADS IN ACCORDANCE WITH THE REQUIREMENTS OF SCRRA DESIGN CRITERIA MANUAL, AREMA MANUAL FOR RAILWAY ENGINEERING, AND CHSRA DESIGN CRITERIA MANUAL

C. MATERIALS:

1. CONCRETE:

1.1 MINIMUM COMPRESSIVE STRENGTH AT 28 DAYS, UNLESS NOTED OTHERWISE: ABUTMENTS, CIDH PILES AND FOOTINGS = 4,000 PSI.

1.2 MINIMUM COMPRESSIVE STRENGTH AT 28 DAYS, FOR COLUMNS = 5,000 PSI.

1.3 MINIMUM COMPRESSIVE STRENGTH AT 28 DAYS, FOR CIP/PS CONCRETE AND DECK SLABS = 6,000 PSI.

1.4 MINIMUM COMPRESSIVE STRENGTH FOR PC/PS "WIDE-FLANGE" CONCRETE GIRDERS, SEE "GIRDER DETAILS" SHEETS (NOT PROVIDED)

1.5 ALL EXPOSED CONCRETE EDGES 90° OR LESS MUST BE CHAMFERED ¾" UNLESS OTHERWISE SHOWN ON DRAWINGS.

1.6 ALL ACUTE CORNERS MUST HAVE STANDARD 4" X 4" CHAMFER, UON.

1.7 MINIMUM CONCRETE COVER ON REINFORCEMENT MUST BE 2 INCHES, UON.

1.8 FOR CONCRETE COLOR, SEE "ARCHITECTURAL DRAWINGS"

2. REINFORCING STEEL:

2.1 ALL REINFORCING STEEL MUST CONFORM TO ASTM A706 GRADE 60.

2.2 ALL BAR BENDS AND SPLICES, WHERE PERMITTED, MUST CONFORM TO 2018 AREMA.

2.3 ALL LAP SPLICES, WEHERE PERMITTED, MUST CONFORM TO 2018 AREMA AND BE STAGGERED.

3. STRUCTURAL STEEL AND MISCELLANEOUS METALS:

WALKWAY CHECKERED PLATE:	ASTM A786 GRADE 36
ALL OTHERS:	ASTM A36
ANCHOR BOLTS:	ASTM A325 TYPE 3 OR ASTM A307 (ALL BOLTS A325 ⅞"Ø UON)
WASHERS:	ASTM F436 TYPE 1
DRAIN PIPES:	ASTM A53 GRADE 8
HAND RAILING:	ASTM A847

ALL ASTM A36 PLATES, ANGLES, PIPES AND CHANNELS MUST BE GALVANIZED AFTER FABRICATION PER ASTM A123 SPECIFICATIONS. ALL ASTM A307 BOLTS, WASHERS, AND NUTS MUST BE GALVANIZED PER ASTM A153 SPECIFICATIONS. ALL WELDING SHALL CONFORM TO THE CURRENT A.W.S BRIDGE WELDING CODE D1.5.

MINIMUM DISTANCE: FROM TOR TO TOP OF CONCRETE DECK	
RAIL + TIE	16.5"
BALLAST	8" Min
HMA	4" Max 2½" Min
WATERPROOFING	1.5"
TOTAL	30"

INDEX TO PLANS

No.	Title
1	GENERAL PLAN
2	GENERAL ELEVATIONS
3	GENERAL NOTES
4	GENERAL SECTIONS NO. 1
5	GENERAL SECTIONS NO. 2
6	GENERAL SECTIONS NO. 3
7	GENERAL SECTIONS NO. 4
8	GENERAL SECTIONS NO. 5
9	GENERAL SECTIONS NO. 6
10	GENERAL SECTIONS NO. 7
11	FOUNDATION DATA
12	FOUNDATION PLAN
13	TYPICAL SECTIONS NO. 1
14	TYPICAL SECTIONS NO. 2
15	

CALTRANS STANDARD PLANS DATED 2018

	A10A	ABBREVIATIONS (SHEET 1 OF 2)
	A10B	ABBREVIATIONS (SHEET 2 OF 2)
	A10C	LINES AND SYMBOLS (SHEET 1 OF 3)
	A10D	LINES AND SYMBOLS (SHEET 2 OF 3)
	A10E	LINES AND SYMBOLS (SHEET 3 OF 3)
	A62C	LIMITS OF PAYMENT FOR EXCAVATION AND BACKFILL - BRIDGE
	A76A	CONCRETE BARRIER TYPE 60M
	A76F	CONCRETE BARRIER TYPE 60MGF
	T3A	TEMPORARY RAILING (TYPE K)
RSP	B0-1	BRIDGE DETAILS
	B0-3	BRIDGE DETAILS
	B0-5	BRIDGE DETAILS
	B0-13	BRIDGE DETAILS
	B3-1A	RETAINING WALL TYPE 1 (CASE 1)
	B3-4A	RETAINING WALL TYPE 5 (CASE 1)
	B3-5	RETAINING WALL DETAILS NO. 1
	B7-1	BOX GIRDER DETAILS
	B7-8	DECK DRAINAGE DETAILS
	B8-5	CAST-IN-PLACE POST-TENSIONED GIRDER DETAILS
	B9-6	STRUCTURE APPROACH DRAINAGE DETAILS
	B11-52	CHAIN LINK RAILING TYPE 7
RSP	B11-81	CONCRETE BARRIER TYPE 842 DETAILS NO. 1
RSP	B11-82	CONCRETE BARRIER TYPE 842 DETAILS NO. 2

ABBREVIATIONS

AREMA	AMERICAN RAILWAY ENGINEERING AND MAINTENANCE-OF-WAY ASSOCIATION
AT&T	AT&T INC
BOSL	CITY OF LOS ANGELES BUREAU OF STREET LIGHTING
CHEVRON	CHEVRON CORPORATION
CHSRA	CALIFORNIA HIGH-SPEED RAIL AUTHORITY
CHSTP	CALIFORNIA HIGH-SPEED TRAIN PROJECT
EMBW	EL MONTE BUSWAY
LABOS	CITY OF LOS ANGELES BUREAU OF SANITATION
LADWP	CITY OF LOS ANGELES DEPARTMENT OF WATER & POWER
LAUS	LOS ANGELES UNION STATION
PLAINS	PLAINS ALL AMERICAN PIPELINE
SCG	SOUTHERN CALIFORNIA GAS COMPANY
SCRRA	SOUTHERN CALIFORNIA REGIONAL RAIL AUTHORITY
TWC	TIME WARNER CABLE

Dist	COUNTY	ROUTE	POST MILES TOTAL PROJECT	SHEET No.	TOTAL SHEETS
07	LA	10S, 101	17.2/17.5, 0.4/0.7	22	34

REGISTERED CIVIL ENGINEER DATE

PLANS APPROVAL DATE

REGISTERED PROFESSIONAL ENGINEER — KATIE L. HICKEY — No. C82783 — Exp. 9/30/20 — CIVIL — STATE OF CALIFORNIA

THE STATE OF CALIFORNIA OR ITS OFFICERS OR AGENTS SHALL NOT BE RESPONSIBLE FOR THE ACCURACY OR COMPLETENESS OF SCANNED COPIES OF THIS PLAN SHEET.

WKE, Inc.
1851 EAST FIRST STREET, SUITE 1400
SANTA ANA, CA 92705

METROPOLITAN TRANSPORTATION AUTHORITY
ONE GATEWAY PLAZA
LOS ANGELES, CA 90012

TYPE SELECTION PLANS - NOT FOR CONSTRUCTION

Preliminary

Original plan submittal made in Aug. 2019

Rev No.	Date	Description
1	3/21	Updated to show latest structural design per Caltrans-approved TSR
2	12/21	
3	6/22	

DESIGN	BY K. Hickey	CHECKED X	PREPARED FOR THE STATE OF CALIFORNIA DEPARTMENT OF TRANSPORTATION
DETAILS	BY T. Doung	CHECKED X	
QUANTITIES	BY X	CHECKED X	

Dan Weddell
PROJECT ENGINEER

BRIDGE No. X
POST MILE 0.56

LAUS VIADUCT OVER US-101
GENERAL NOTES

DATE PLOTTED => 01-APR-2020 TIME PLOTTED => 10:50
FILE => zb-gnotes-CMG.dgn USERNAME => TDoung
ORIGINAL SCALE IN INCHES FOR REDUCED PLANS 0 1 2 3

UNIT: X
PROJECT NUMBER & PHASE: X CONTRACT No.: X

DISREGARD PRINTS BEARING EARLIER REVISION DATES

REVISION DATES				SHEET	OF
8/01/19	3/05/21			3	14

SHEET NO 27

Dist	COUNTY	ROUTE	POST MILES TOTAL PROJECT	SHEET No.	TOTAL SHEETS
07	LA	10S, 101	17.2/17.5, 0.4/0.7	23	34

REGISTERED CIVIL ENGINEER DATE

PLANS APPROVAL DATE

REGISTERED PROFESSIONAL ENGINEER
KATIE L. HICKEY
No. C82783
Exp. 9/30/20
CIVIL
STATE OF CALIFORNIA

THE STATE OF CALIFORNIA OR ITS OFFICERS OR AGENTS SHALL NOT BE RESPONSIBLE FOR THE ACCURACY OR COMPLETENESS OF SCANNED COPIES OF THIS PLAN SHEET.

WKE, Inc.
1851 EAST FIRST STREET, SUITE 1400
SANTA ANA, CA 92705

METROPOLITAN TRANSPORTATION AUTHORITY
ONE GATEWAY PLAZA
LOS ANGELES, CA 90012

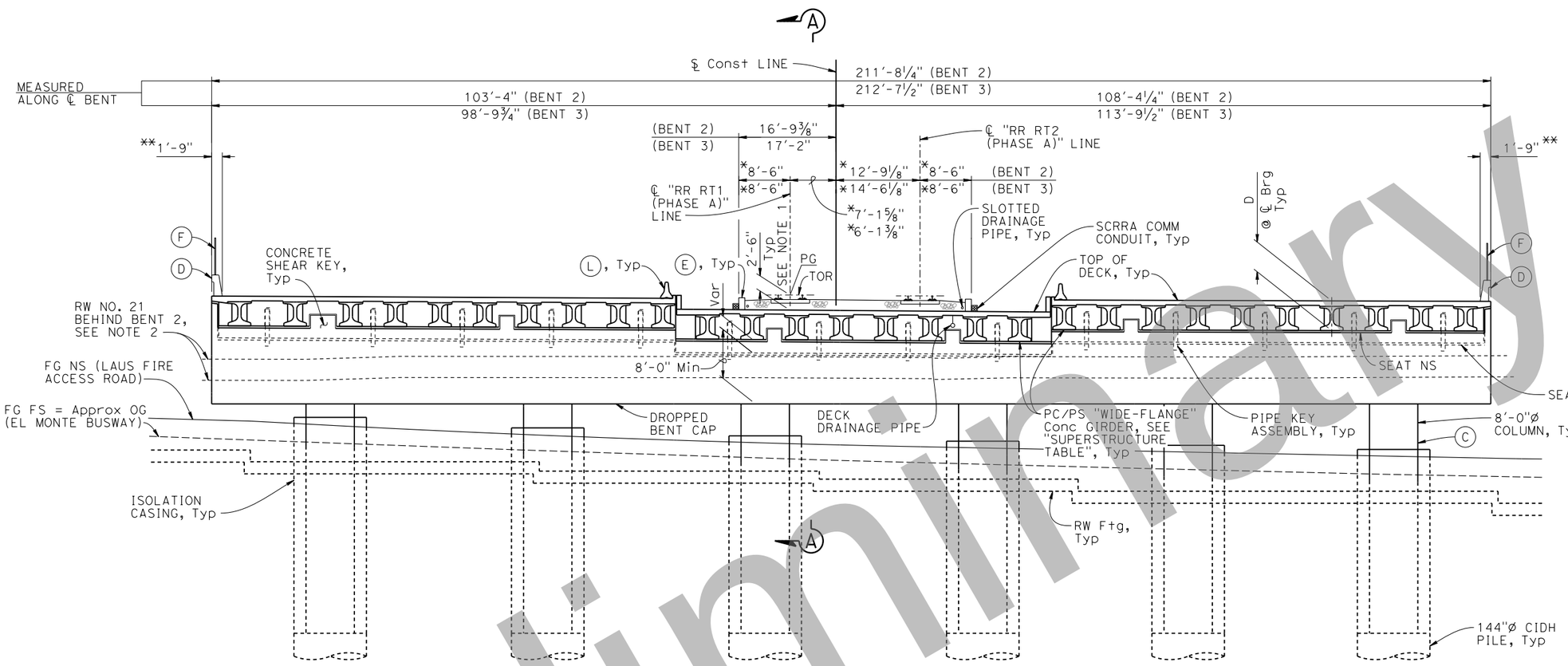

TYPICAL SECTION - ALONG ℄ BENT 2

1" = 10′

NOTE:
Bent 2 shown,
Bent 3 similar.

NOTES:

(C) Paint Bent Number
(D) Concrete Barrier (Type 842)
(E) Concrete Ballast Guard
(F) Chain Link Railing (Type 7)
(L) Temporary railing Type K

LEGEND:

* Measured radially to ℄ track
** Measured radially to edge of deck
Ballast

NOTES:

1. For table of minimum distance from top of rail to top of deck, see "GENERAL NOTES" sheet.
2. For retaining wall layout, see "RW NO. 21" plans.
3. For "SECTION A-A", see "GENERAL SECTIONS NO. 6" sheet.

TYPE SELECTION PLANS - NOT FOR CONSTRUCTION

SUPERSTRUCTURE TABLE

LOCATION	D	GIRDER TYPE	BEARING PAD/ASSEMBLY TYPE
SPAN 1	4′-11"	48" PC/PS "WIDE-FLANGE" CONCRETE GIRDER	STEEL REINFORCED ELASTOMERIC BEARING PAD
SPAN 2	6′-11"	72" PC/PS "WIDE-FLANGE" CONCRETE GIRDER	STEEL REINFORCED ELASTOMERIC BEARING PAD
SPAN 3	9′-5"	102" PC/PS "WIDE-FLANGE" CONCRETE GIRDER WITH POST-TENSIONING	STEEL REINFORCED ELASTOMERIC BEARING PAD

Original plan submittal made in Aug. 2019

Rev No.	Date	Description
1	3/21	Updated to show latest structural design per Caltrans-approved TSR
2	12/21	
3	6/22	

Preliminary

✖ DESIGN OVERSIGHT
✖ SIGN OFF DATE

	BY	CHECKED
DESIGN	K. Hickey	X
DETAILS	T. Doung	X
QUANTITIES	X	X

PREPARED FOR THE STATE OF CALIFORNIA DEPARTMENT OF TRANSPORTATION

Dan Weddell
PROJECT ENGINEER

BRIDGE No. X
POST MILE 0.56

LAUS VIADUCT OVER US-101
GENERAL SECTIONS NO. 1

DESIGN DETAIL SHEET (ENGLISH) (REVISION 4/19/2018)

DATE PLOTTED => 01-APR-2020 TIME PLOTTED => 10:50
FILE => zc-gs01-CMG.dgn USERNAME => TDoung
ORIGINAL SCALE IN INCHES FOR REDUCED PLANS 0 1 2 3

UNIT: X
PROJECT NUMBER & PHASE: X CONTRACT No.: X

DISREGARD PRINTS BEARING EARLIER REVISION DATES

REVISION DATES				SHEET	OF
8/01/19	3/05/21			4	14

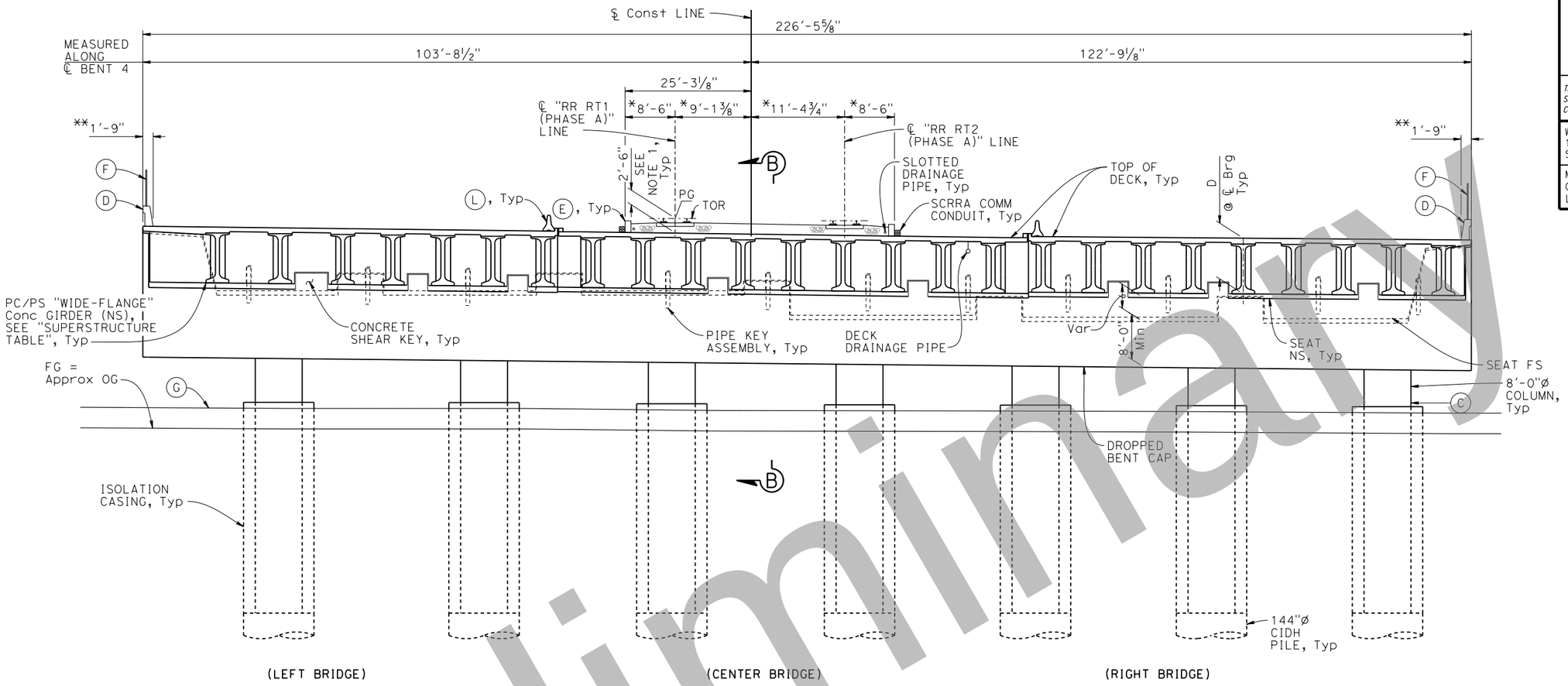

TYPICAL SECTION - ALONG ℄ BENT 4

1" = 10'

Dist	COUNTY	ROUTE	POST MILES TOTAL PROJECT	SHEET No.	TOTAL SHEETS
07	LA	10S, 101	17.2/17.5, 0.4/0.7	24	34

REGISTERED CIVIL ENGINEER — DATE

PLANS APPROVAL DATE

REGISTERED PROFESSIONAL ENGINEER — KATIE L. HICKEY — No. C82783 — Exp. 9/30/20 — CIVIL — STATE OF CALIFORNIA

THE STATE OF CALIFORNIA OR ITS OFFICERS OR AGENTS SHALL NOT BE RESPONSIBLE FOR THE ACCURACY OR COMPLETENESS OF SCANNED COPIES OF THIS PLAN SHEET.

WKE, Inc.
1851 EAST FIRST STREET, SUITE 1400
SANTA ANA, CA 92705

METROPOLITAN TRANSPORTATION AUTHORITY
ONE GATEWAY PLAZA
LOS ANGELES, CA 90012

NOTES:

- (C) Paint Bent Number
- (D) Concrete Barrier (Type 842)
- (E) Concrete Ballast Guard
- (G) Concrete Barrier (Type 60MGF)
- (F) Chain Link Railing (Type 7)
- (L) Temporary railing Type K

LEGEND:

- Ballast
- * Measured radially to ℄ track
- ** Measured radially to edge of deck

NOTES:

1. For table of minimum distance from top of rail to top of deck, see "GENERAL NOTES" sheet.
2. For "SECTION B-B", see "GENERAL SECTIONS NO. 6" sheet.

SUPERSTRUCTURE TABLE

LOCATION	D	GIRDER TYPE	BEARING PAD/ASSEMBLY TYPE
SPAN 3	9'-5"	102" PC/PS "WIDE-FLANGE" CONCRETE GIRDER WITH POST-TENSIONING	STEEL REINFORCED ELASTOMERIC BEARING PAD
SPAN 4L @ BENT 4	11'-0"	CIP/PS "DELTA" CONCRETE BOX GIRDER	PTFE SPHERICAL BEARING ASSEMBLY
SPAN 4R @ BENT 4	13'-6"	CIP/PS "DELTA" CONCRETE BOX GIRDER	PTFE SPHERICAL BEARING ASSEMBLY

Original plan submittal made in Aug. 2019

Rev No.	Date	Description
1	3/21	Updated to show latest structural design per Caltrans-approved TSR
2	12/21	
3	6/22	

TYPE SELECTION PLANS - NOT FOR CONSTRUCTION

Preliminary

DESIGN	BY K. Hickey	CHECKED X	PREPARED FOR THE STATE OF CALIFORNIA DEPARTMENT OF TRANSPORTATION	Dan Weddell PROJECT ENGINEER	BRIDGE No. X; POST MILE 0.56
DETAILS	BY T. Doung	CHECKED X			
QUANTITIES	BY X	CHECKED X			

LAUS VIADUCT OVER US-101

GENERAL SECTIONS NO. 2

X DESIGN OVERSIGHT

X SIGN OFF DATE

DESIGN DETAIL SHEET (ENGLISH) (REVISION 4/19/2018)

DATE PLOTTED => 01-APR-2020 TIME PLOTTED => 10:50
FILE => zc-gs02-CMG.dgn USERNAME => TDoung

ORIGINAL SCALE IN INCHES FOR REDUCED PLANS 0 1 2 3

UNIT: X
PROJECT NUMBER & PHASE: X CONTRACT No.: X

DISREGARD PRINTS BEARING EARLIER REVISION DATES

REVISION DATES				SHEET	OF
8/01/19	3/05/21			5	14

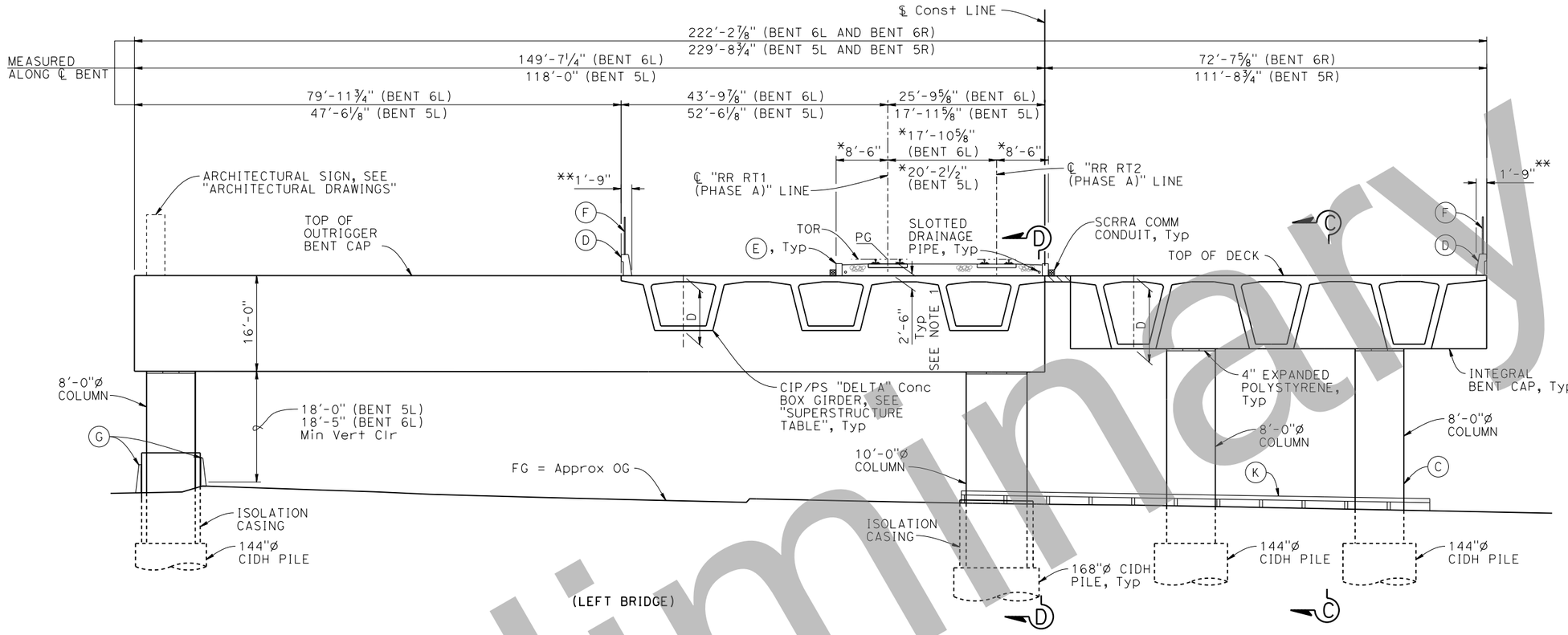

NOTE:
Bent 6 shown,
Bent 5 similar.

DEVELOPED TYPICAL SECTION - ALONG ℄ BENTS 6R AND 6L

1" = 10′

Dist	COUNTY	ROUTE	POST MILES TOTAL PROJECT	SHEET No.	TOTAL SHEETS
07	LA	10S, 101	17.2/17.5, 0.4/0.7	25	34

REGISTERED CIVIL ENGINEER — DATE

PLANS APPROVAL DATE

REGISTERED PROFESSIONAL ENGINEER — KATIE L. HICKEY — No. C82783 — Exp. 9/30/20 — CIVIL — STATE OF CALIFORNIA

THE STATE OF CALIFORNIA OR ITS OFFICERS OR AGENTS SHALL NOT BE RESPONSIBLE FOR THE ACCURACY OR COMPLETENESS OF SCANNED COPIES OF THIS PLAN SHEET.

WKE, Inc.
1851 EAST FIRST STREET, SUITE 1400
SANTA ANA, CA 92705

METROPOLITAN TRANSPORTATION AUTHORITY
ONE GATEWAY PLAZA
LOS ANGELES, CA 90012

NOTES:

- (C) Paint Bent Number
- (D) Concrete Barrier (Type 842)
- (E) Concrete Ballast Guard
- (F) Chain Link Railing (Type 7)
- (G) Concrete Barrier (Type 60MGF)
- (K) MGS

LEGEND:

- Closure pour (4′-0")
- Ballast
- * Measured radially to ℄ track
- ** Measured radially to edge of deck

NOTES:

1. For table of minimum distance from top of rail to top of deck, see "GENERAL NOTES" sheet.
2. For "SECTION C-C" and "SECTION D-D", see "GENERAL SECTIONS NO. 7" sheet.

TYPE SELECTION PLANS - NOT FOR CONSTRUCTION

Original plan submittal made in Aug. 2019

Rev No.	Date	Description
1	3/21	Updated to show latest structural design per Caltrans-approved TSR
2	12/21	
3	6/22	

SUPERSTRUCTURE TABLE

LOCATION	D	GIRDER TYPE
SPANS 4L & 5L @ BENT 5	11′-0"	CIP/PS "DELTA" CONCRETE BOX GIRDER
SPANS 4R & 5R @ BENT 5	13′-6"	CIP/PS "DELTA" CONCRETE BOX GIRDER
SPANS 5L & 6L @ BENT 6	9′-0"	CIP/PS "DELTA" CONCRETE BOX GIRDER
SPANS 5R & 6R @ BENT 6	12′-0"	CIP/PS "DELTA" CONCRETE BOX GIRDER

Preliminary

DESIGN OVERSIGHT: X	DESIGN: BY K. Hickey, CHECKED X	PREPARED FOR THE STATE OF CALIFORNIA DEPARTMENT OF TRANSPORTATION	Dan Weddell, PROJECT ENGINEER
SIGN OFF DATE: X	DETAILS: BY T. Doung, CHECKED X		BRIDGE No. X; POST MILE 0.56
	QUANTITIES: BY X, CHECKED X		LAUS VIADUCT OVER US-101 GENERAL SECTIONS NO. 3

DESIGN DETAIL SHEET (ENGLISH) (REVISION 4/19/2018)
DATE PLOTTED => 01-APR-2020 TIME PLOTTED => 10:50
FILE => zc-gs03-CMG.dgn USERNAME => TDoung
ORIGINAL SCALE IN INCHES FOR REDUCED PLANS 0 1 2 3
UNIT: X
PROJECT NUMBER & PHASE: X CONTRACT No.: X
DISREGARD PRINTS BEARING EARLIER REVISION DATES
REVISION DATES: 8/01/19 3/05/21
SHEET 6 OF 14

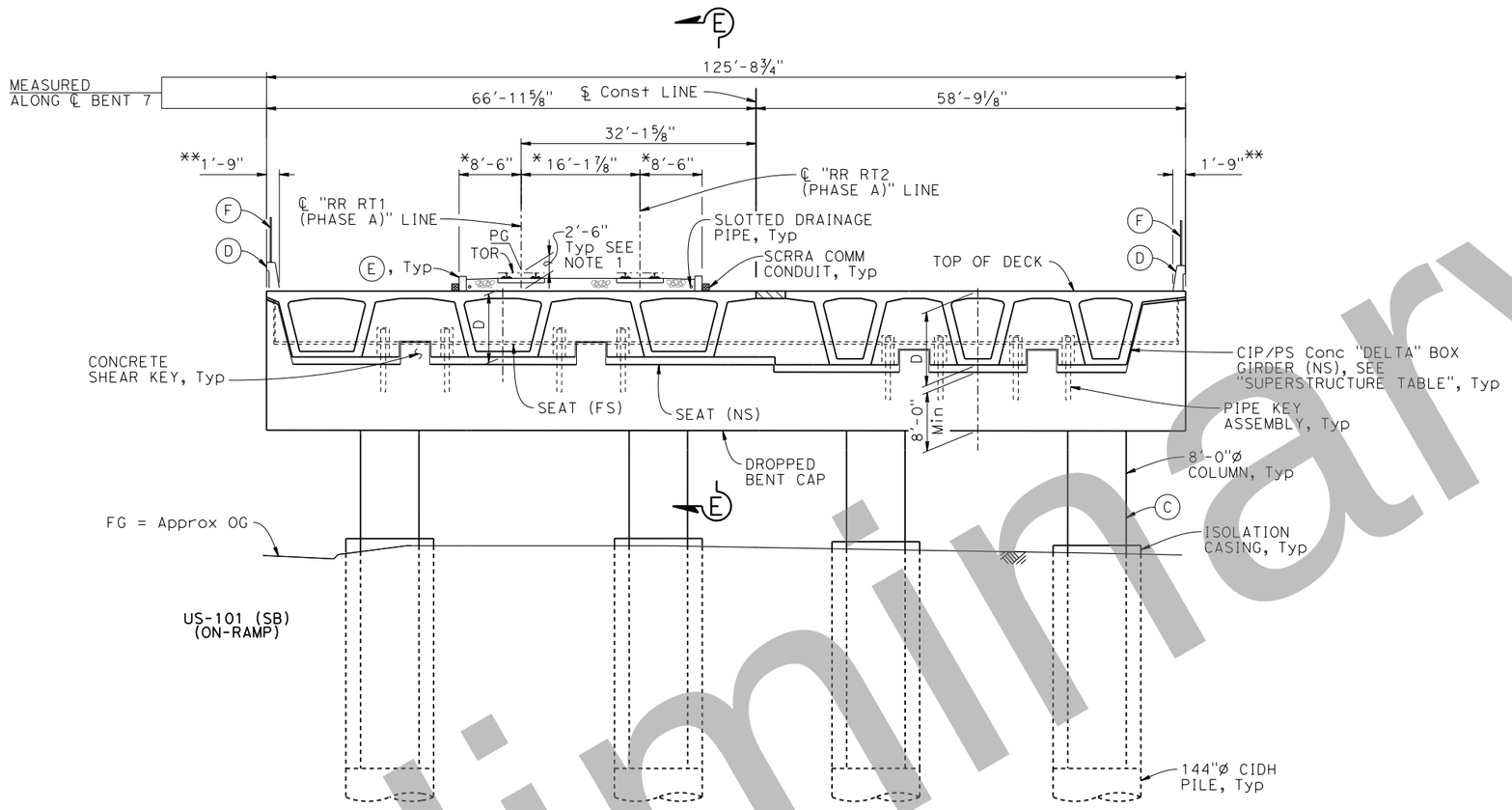

TYPICAL SECTION - ALONG ℄ BENT 7

1" = 10'

Dist	COUNTY	ROUTE	POST MILES TOTAL PROJECT	SHEET No.	TOTAL SHEETS
07	LA	10S, 101	17.2/17.5, 0.4/0.7	26	34

REGISTERED CIVIL ENGINEER DATE

PLANS APPROVAL DATE

REGISTERED PROFESSIONAL ENGINEER — KATIE L. HICKEY — No. C82783 — Exp. 9/30/20 — CIVIL — STATE OF CALIFORNIA

THE STATE OF CALIFORNIA OR ITS OFFICERS OR AGENTS SHALL NOT BE RESPONSIBLE FOR THE ACCURACY OR COMPLETENESS OF SCANNED COPIES OF THIS PLAN SHEET.

WKE, Inc.
1851 EAST FIRST STREET, SUITE 1400
SANTA ANA, CA 92705

METROPOLITAN TRANSPORTATION AUTHORITY
ONE GATEWAY PLAZA
LOS ANGELES, CA 90012

NOTES:

- (C) Paint Bent Number
- (D) Concrete Barrier (Type 842)
- (E) Concrete Ballast Guard
- (F) Chain Link Railing (Type 7)

LEGEND:

- Closure pour (4'-0")
- Ballast
- * Measured radially to ℄ track
- ** Measured radially to edge of deck

NOTES:

1. For table of minimum distance from top of rail to top of deck, see "GENERAL NOTES" sheet.
2. For "SECTION E-E", see "GENERAL SECTIONS NO. 7" sheet.

TYPE SELECTION PLANS - NOT FOR CONSTRUCTION

SUPERSTRUCTURE TABLE

LOCATION	D	GIRDER TYPE	BEARING PAD/ASSEMBLY TYPE
SPAN 6L @ BENT 7	9'-0"	CIP/PS "DELTA" CONCRETE BOX GIRDER	PTFE SPHERICAL BEARING ASSEMBLY
SPAN 6R @ BENT 7	10'-0"	CIP/PS "DELTA" CONCRETE BOX GIRDER	PTFE SPHERICAL BEARING ASSEMBLY
SPAN 7	6'-11"	72" PC/PS "WIDE-FLANGE" CONCRETE GIRDER	STEEL REINFORCED ELASTOMERIC BEARING PAD

Original plan submittal made in Aug. 2019

Rev No.	Date	Description
1	3/21	Updated to show latest structural design per Caltrans-approved TSR
2	12/21	
3	6/22	

Preliminary

✖ DESIGN OVERSIGHT	DESIGN	BY K. Hickey	CHECKED X	PREPARED FOR THE STATE OF CALIFORNIA DEPARTMENT OF TRANSPORTATION	Dan Weddell PROJECT ENGINEER
✖ SIGN OFF DATE	DETAILS	BY T. Doung	CHECKED X		BRIDGE No. X
	QUANTITIES	BY X	CHECKED X		POST MILE 0.56

LAUS VIADUCT OVER US-101

GENERAL SECTIONS NO. 4

DESIGN DETAIL SHEET (ENGLISH) (REVISION 4/19/2018)

DATE PLOTTED => 01-APR-2020 TIME PLOTTED => 10:50
FILE => zc-gs04-CMG.dgn USERNAME => TDoung

ORIGINAL SCALE IN INCHES FOR REDUCED PLANS 0 1 2 3

UNIT: X
PROJECT NUMBER & PHASE: X CONTRACT No.: X

DISREGARD PRINTS BEARING EARLIER REVISION DATES

REVISION DATES				SHEET	OF
8/01/19	3/05/21			7	14

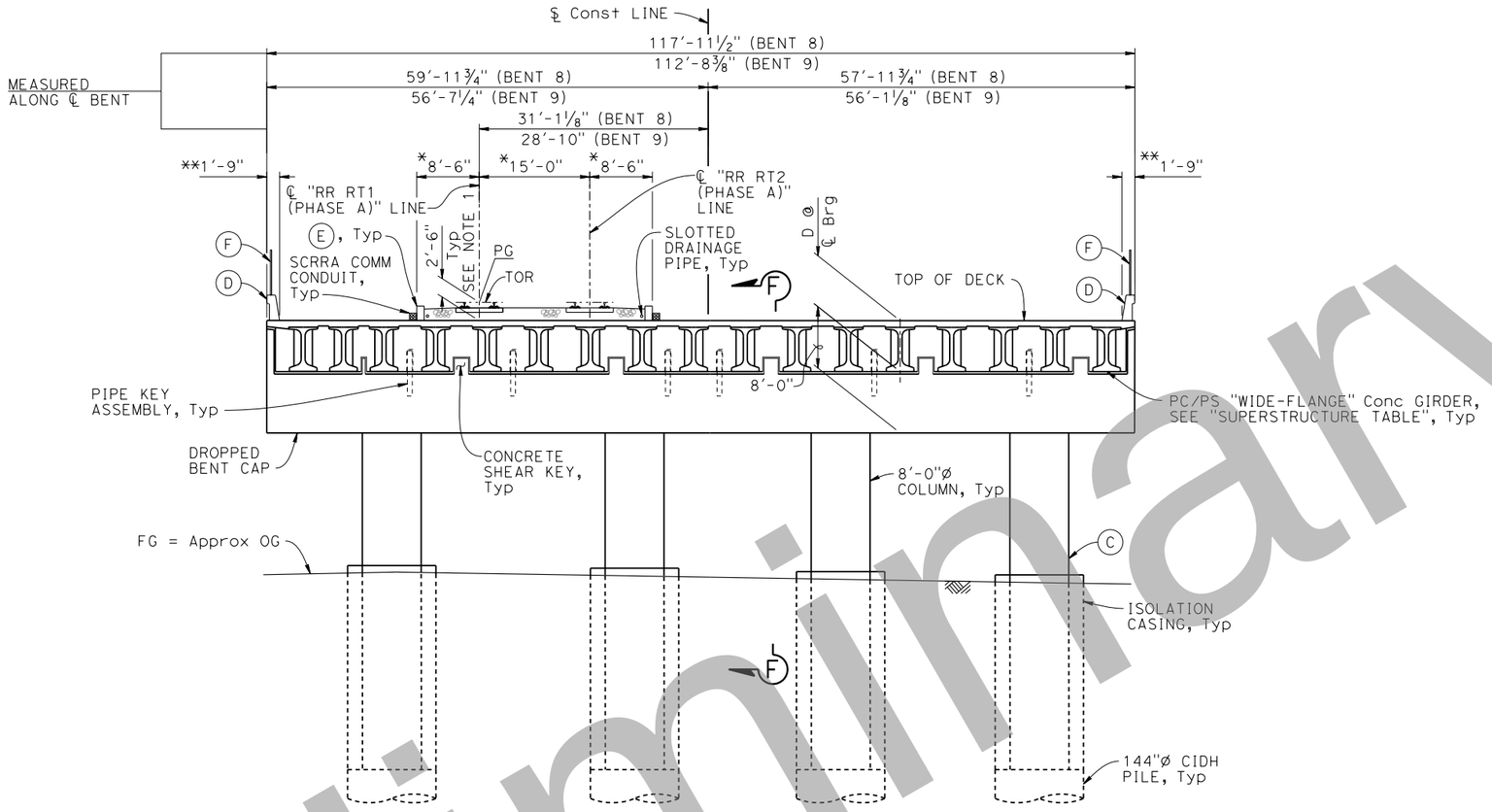

TYPICAL SECTION - ALONG ℄ BENT 8

1" = 10′

NOTE:
Bent 8 shown,
Bent 9 similar.

Dist	COUNTY	ROUTE	POST MILES TOTAL PROJECT	SHEET No.	TOTAL SHEETS
07	LA	10S, 101	17.2/17.5, 0.4/0.7	27	34

REGISTERED CIVIL ENGINEER — DATE

PLANS APPROVAL DATE

REGISTERED PROFESSIONAL ENGINEER — KATIE L. HICKEY — No. C82783 — Exp. 9/30/20 — CIVIL — STATE OF CALIFORNIA

THE STATE OF CALIFORNIA OR ITS OFFICERS OR AGENTS SHALL NOT BE RESPONSIBLE FOR THE ACCURACY OR COMPLETENESS OF SCANNED COPIES OF THIS PLAN SHEET.

WKE, Inc.
1851 EAST FIRST STREET, SUITE 1400
SANTA ANA, CA 92705

METROPOLITAN TRANSPORTATION AUTHORITY
ONE GATEWAY PLAZA
LOS ANGELES, CA 90012

NOTES:

(C) Paint Bent Number
(D) Concrete Barrier (Type 842)
(E) Concrete Ballast Guard
(F) Chain Link Railing (Type 7)

LEGEND:

Ballast

* Measured radially to ℄ track

** Measured normal to edge of deck

NOTES:

1. For table of minimum distance from top of rail to top of deck, see "GENERAL NOTES" sheet.
2. For "SECTION F-F", see "GENERAL SECTIONS NO. 7" sheet.

SUPERSTRUCTURE TABLE			
LOCATION	D	GIRDER TYPE	BEARING PAD/ASSEMBLY TYPE
SPAN 7	6′-11"	72" PC/PS "WIDE-FLANGE" CONCRETE GIRDER	STEEL REINFORCED ELASTOMERIC BEARING PAD
SPAN 8	6′-11"	72" PC/PS "WIDE-FLANGE" CONCRETE GIRDER	STEEL REINFORCED ELASTOMERIC BEARING PAD
SPAN 9	6′-11"	72" PC/PS "WIDE-FLANGE" CONCRETE GIRDER	STEEL REINFORCED ELASTOMERIC BEARING PAD

Original plan submittal made in Aug. 2019

Rev No.	Date	Description
1	3/21	Updated to show latest structural design per Caltrans-approved TSR
2	12/21	
3	6/22	

TYPE SELECTION PLANS - NOT FOR CONSTRUCTION

Preliminary

DESIGN OVERSIGHT	DESIGN	BY K. Hickey	CHECKED X	PREPARED FOR THE STATE OF CALIFORNIA DEPARTMENT OF TRANSPORTATION	Dan Weddell, PROJECT ENGINEER
SIGN OFF DATE	DETAILS	BY T. Doung	CHECKED X		BRIDGE No. X; POST MILE 0.56
	QUANTITIES	BY X	CHECKED X		LAUS VIADUCT OVER US-101 GENERAL SECTIONS NO. 5

DESIGN DETAIL SHEET (ENGLISH) (REVISION 4/19/2018)
DATE PLOTTED => 01-APR-2020 TIME PLOTTED => 10:50
FILE => zc-gs05.CMG.dgn USERNAME => TDoung
ORIGINAL SCALE IN INCHES FOR REDUCED PLANS 0 1 2 3
UNIT: X PROJECT NUMBER & PHASE: X CONTRACT No.: X
DISREGARD PRINTS BEARING EARLIER REVISION DATES →
REVISION DATES: 8/01/19 | 3/05/21 | SHEET 8 | OF 14

Dist	COUNTY	ROUTE	POST MILES TOTAL PROJECT	SHEET No.	TOTAL SHEETS
07	LA	10S, 101	17.2/17.5, 0.4/0.7	28	34

REGISTERED CIVIL ENGINEER _____ DATE _____

PLANS APPROVAL DATE _____

REGISTERED PROFESSIONAL ENGINEER — KATIE L. HICKEY — No. C82783 — Exp. 9/30/20 — CIVIL — STATE OF CALIFORNIA

THE STATE OF CALIFORNIA OR ITS OFFICERS OR AGENTS SHALL NOT BE RESPONSIBLE FOR THE ACCURACY OR COMPLETENESS OF SCANNED COPIES OF THIS PLAN SHEET.

WKE, Inc.
1851 EAST FIRST STREET, SUITE 1400
SANTA ANA, CA 92705

METROPOLITAN TRANSPORTATION AUTHORITY
ONE GATEWAY PLAZA
LOS ANGELES, CA 90012

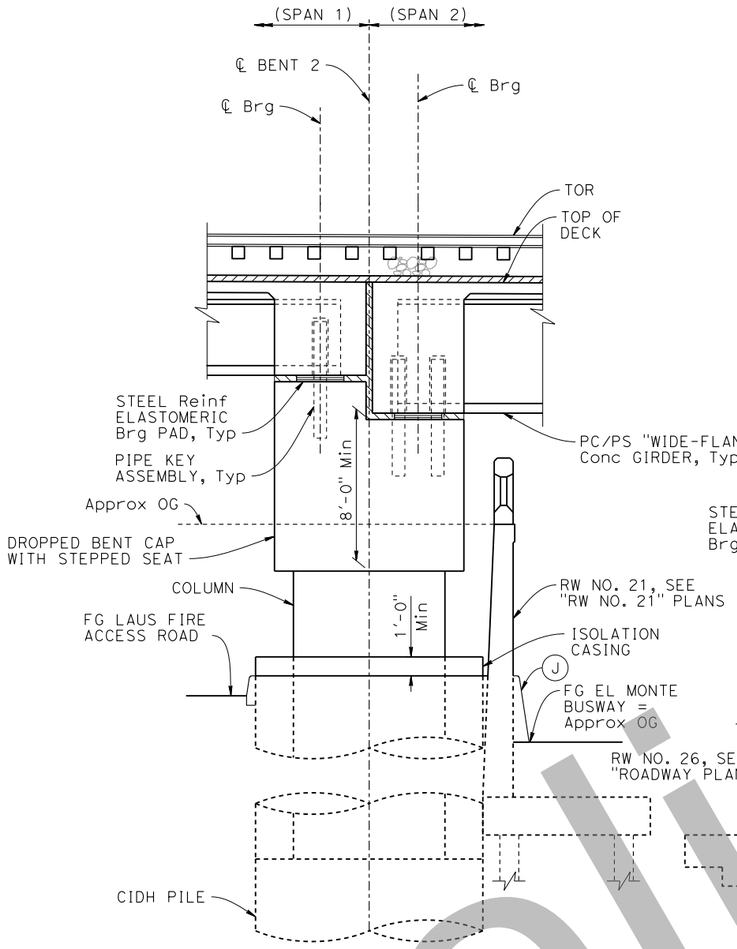

BENT 2

NOTE:
Existing retaining wall not shown for clarity.

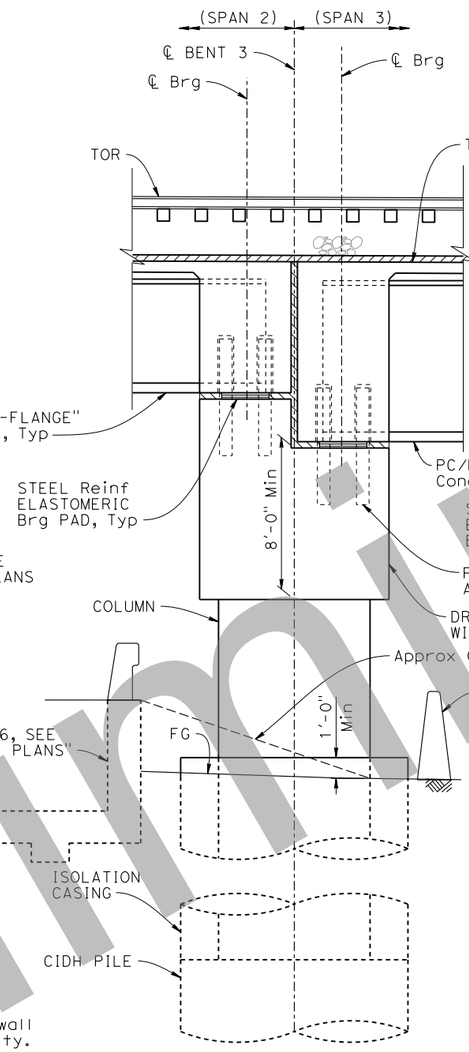

BENT 3

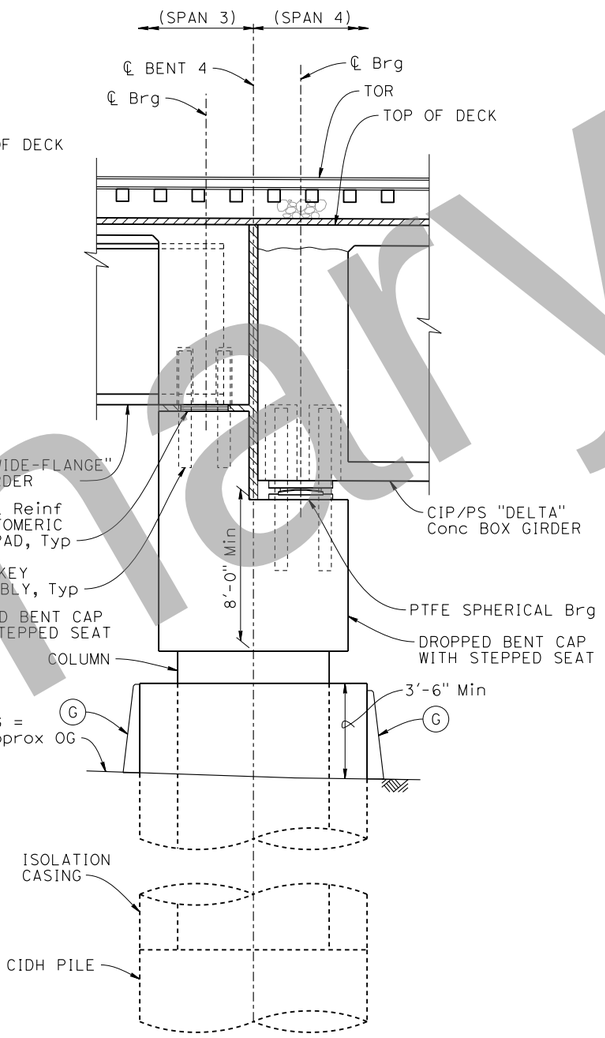

SECTION A-A
1/4" = 1'-0"

SECTION B-B
1/4" = 1'-0"

NOTES:
- (G) Concrete Barrier (Type 60MGF)
- (H) Concrete Barrier (Type 60M)
- (J) Concrete Barrier (Type 60MD)

LEGEND:
- Hot Mix Asphalt
- Ballast

Original plan submittal made in Aug. 2019

Rev No.	Date	Description
1	3/21	Updated to show latest structural design per Caltrans-approved TSR
2	12/21	
3	6/22	

TYPE SELECTION PLANS - NOT FOR CONSTRUCTION

Preliminary

DESIGN	BY K. Hickey	CHECKED X	PREPARED FOR THE STATE OF CALIFORNIA DEPARTMENT OF TRANSPORTATION
DETAILS	BY T. Doung	CHECKED X	
QUANTITIES	BY X	CHECKED X	

X DESIGN OVERSIGHT
X SIGN OFF DATE

Dan Weddell
PROJECT ENGINEER

BRIDGE No. X
POST MILE 0.56

LAUS VIADUCT OVER US-101
GENERAL SECTIONS NO. 6

DESIGN DETAIL SHEET (ENGLISH) (REVISION 4/19/2018)

DATE PLOTTED => 01-APR-2020 TIME PLOTTED => 10:50
FILE => zc-gs06.CMG.dgn USERNAME => TDoung

ORIGINAL SCALE IN INCHES FOR REDUCED PLANS 0 1 2 3

UNIT: X
PROJECT NUMBER & PHASE: X CONTRACT No.: X

DISREGARD PRINTS BEARING EARLIER REVISION DATES

REVISION DATES				SHEET	OF
8/01/19	3/05/21			9	14

Dist	COUNTY	ROUTE	POST MILES TOTAL PROJECT	SHEET No.	TOTAL SHEETS
07	LA	10S, 101	17.2/17.5, 0.4/0.7	29	34

REGISTERED CIVIL ENGINEER _____ DATE _____

PLANS APPROVAL DATE _____

REGISTERED PROFESSIONAL ENGINEER — KATIE L. HICKEY — No. C82783 — Exp. 9/30/20 — CIVIL — STATE OF CALIFORNIA

THE STATE OF CALIFORNIA OR ITS OFFICERS OR AGENTS SHALL NOT BE RESPONSIBLE FOR THE ACCURACY OR COMPLETENESS OF SCANNED COPIES OF THIS PLAN SHEET.

WKE, Inc.
1851 EAST FIRST STREET, SUITE 1400
SANTA ANA, CA 92705

METROPOLITAN TRANSPORTATION AUTHORITY
ONE GATEWAY PLAZA
LOS ANGELES, CA 90012

TYPE SELECTION PLANS - NOT FOR CONSTRUCTION

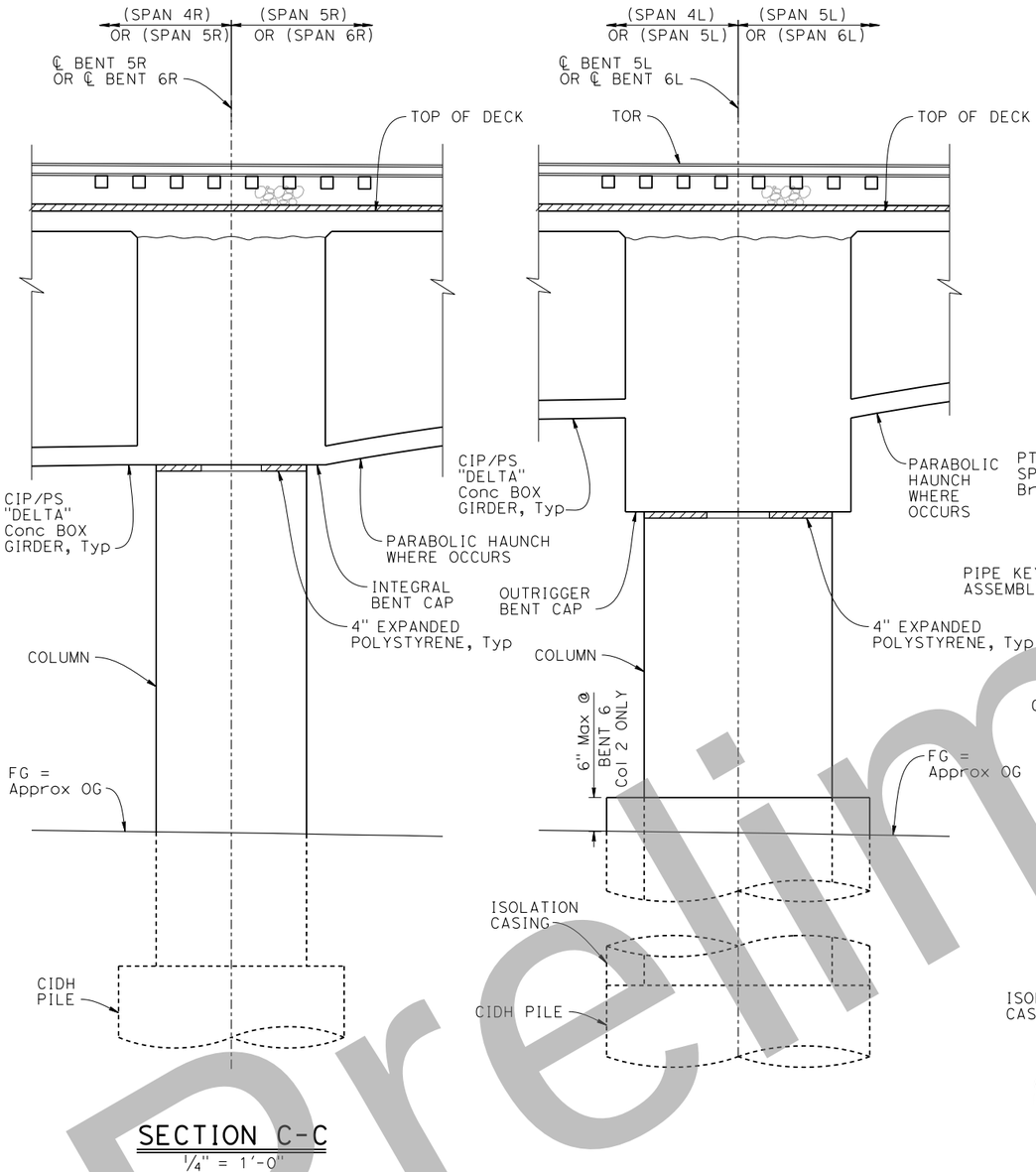

SECTION C-C
1/4" = 1'-0"

SECTION D-D
1/4" = 1'-0"

NOTE:
Bent 6R shown,
Bent 5R similar.

NOTE:
Bent 6L shown,
Bent 5L similar.

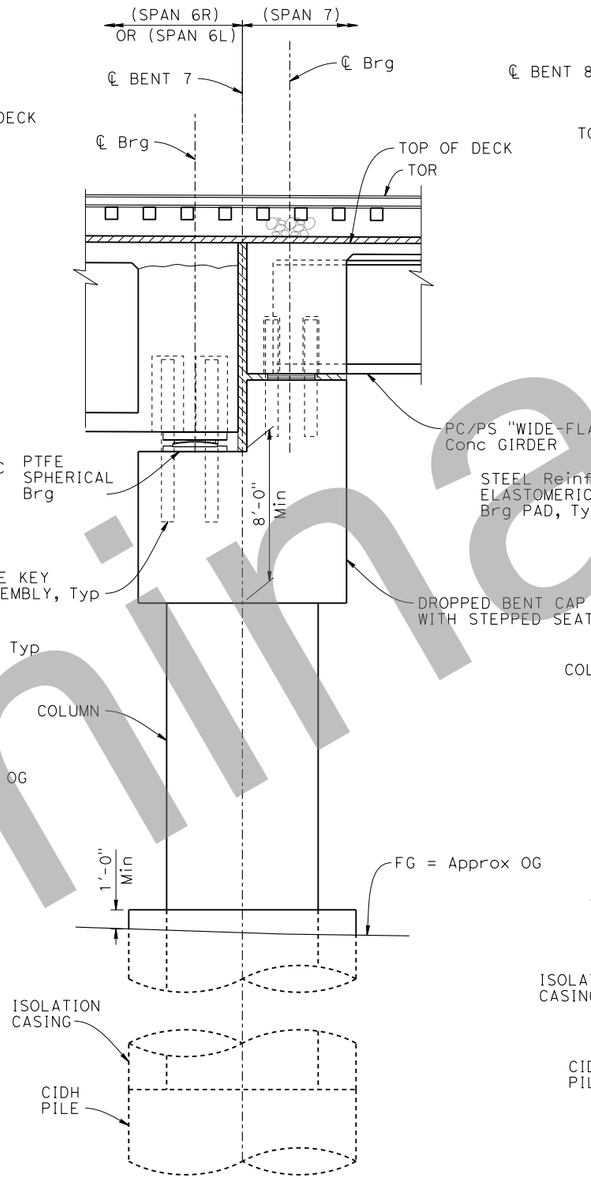

SECTION E-E
1/4" = 1'-0"

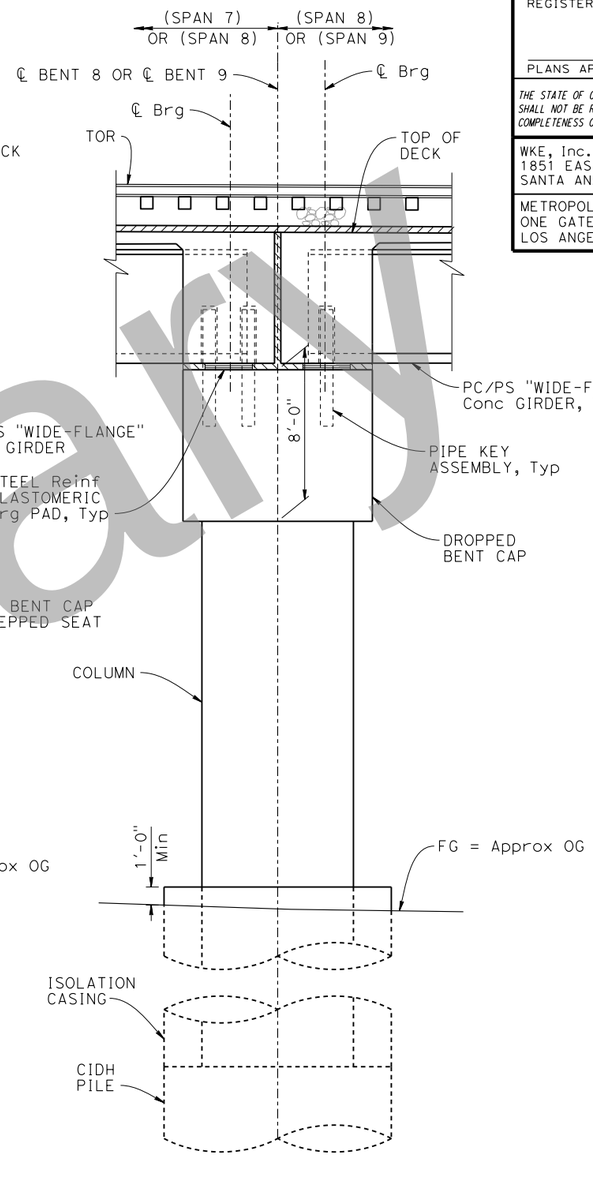

SECTION F-F
1/4" = 1'-0"

NOTE:
Bent 8 shown,
Bent 9 similar.

LEGEND:
- Hot Mix Asphalt
- Ballast

Preliminary

Original plan submittal made in Aug. 2019

Rev No.	Date	Description
1	3/21	Plan added to set
2	12/21	
3	6/22	

DESIGN	BY K. Hickey	CHECKED X
DETAILS	BY T. Doung	CHECKED X
QUANTITIES	BY X	CHECKED X

PREPARED FOR THE STATE OF CALIFORNIA DEPARTMENT OF TRANSPORTATION

Dan Weddell
PROJECT ENGINEER

BRIDGE No. X
POST MILE 0.56

LAUS VIADUCT OVER US-101
GENERAL SECTIONS NO. 7

DATE PLOTTED => 01-APR-2020 TIME PLOTTED => 10:50
FILE => zc-gs07.CMG.dgn USERNAME => TDoung
ORIGINAL SCALE IN INCHES FOR REDUCED PLANS 0 1 2 3

UNIT: X
PROJECT NUMBER & PHASE: X CONTRACT No.: X

DISREGARD PRINTS BEARING EARLIER REVISION DATES →

REVISION DATES				SHEET	OF
8/01/19	3/05/21			10	14

SHEET NO 34

Dist	COUNTY	ROUTE	POST MILES TOTAL PROJECT	SHEET No.	TOTAL SHEETS
07	LA	10S, 101	17.2/17.5, 0.4/0.7	30	34

REGISTERED CIVIL ENGINEER _____ DATE _____

PLANS APPROVAL DATE _____

REGISTERED PROFESSIONAL ENGINEER — KATIE L. HICKEY — No. C82783 — Exp. 9/30/20 — CIVIL — STATE OF CALIFORNIA

THE STATE OF CALIFORNIA OR ITS OFFICERS OR AGENTS SHALL NOT BE RESPONSIBLE FOR THE ACCURACY OR COMPLETENESS OF SCANNED COPIES OF THIS PLAN SHEET.

WKE, Inc.
1851 EAST FIRST STREET, SUITE 1400
SANTA ANA, CA 92705

METROPOLITAN TRANSPORTATION AUTHORITY
ONE GATEWAY PLAZA
LOS ANGELES, CA 90012

PILE DATA TABLE

LOCATION		PILE TYPE	NOMINAL RESISTANCE (kips) COMPRESSION	NOMINAL RESISTANCE (kips) TENSION	CUT-OFF ELEVATION (ft)	DESIGN TIP ELEVATION (ft)	SPECIFIED TIP ELEVATION (ft)
Abut 1		60" CIDH	2100	N/A	271.75	TBD	207.75
BENT 2	Col 1	144" CIDH	5720	N/A	255.00	TBD	183.00
	Col 2	144" CIDH	6430	N/A	255.00	TBD	178.00
	Col 3	144" CIDH	5860	N/A	255.00	TBD	183.00
	Col 4	144" CIDH	5580	N/A	255.00	TBD	183.00
	Col 5	144" CIDH	5860	N/A	255.00	TBD	183.00
	Col 6	144" CIDH	6580	N/A	255.00	TBD	176.00
BENT 3	Col 1	144" CIDH	8000	N/A	250.00	TBD	161.00
	Col 2	144" CIDH	8150	N/A	250.00	TBD	159.00
	Col 3	144" CIDH	8150	N/A	250.00	TBD	159.00
	Col 4	144" CIDH	8430	N/A	250.00	TBD	156.00
	Col 5	144" CIDH	8860	N/A	250.00	TBD	152.00
	Col 6	144" CIDH	9000	N/A	250.00	TBD	151.00
	Col 7	144" CIDH	9150	N/A	250.00	TBD	149.00

PILE DATA TABLE (Cont)

LOCATION		PILE TYPE	NOMINAL RESISTANCE (kips) COMPRESSION	NOMINAL RESISTANCE (kips) TENSION	CUT-OFF ELEVATION (ft)	DESIGN TIP ELEVATION (ft)	SPECIFIED TIP ELEVATION (ft)
BENT 4	Col 1	144" CIDH	6200	N/A	249.00	TBD	177.00
	Col 2	144" CIDH	8000	N/A	249.00	TBD	159.00
	Col 3	144" CIDH	8860	N/A	249.00	TBD	151.00
	Col 4	144" CIDH	9720	N/A	249.00	TBD	143.00
	Col 5	144" CIDH	8720	N/A	249.00	TBD	153.00
	Col 6	144" CIDH	8860	N/A	249.00	TBD	151.00
	Col 7	144" CIDH	8860	N/A	249.00	TBD	151.00
Bent 5	Col 1	144" CIDH	7000	N/A	272.00	TBD	198.00
	Col 2	168" CIDH	17000	N/A	270.00	TBD	122.00
	Col 3	144" CIDH	13720	N/A	273.50	TBD	132.50
	Col 4	144" CIDH	11860	N/A	273.50	TBD	150.50
	Col 5	144" CIDH	11290	N/A	273.50	TBD	155.50
Bent 6	Col 1	144" CIDH	7200	N/A	272.00	TBD	197.00
	Col 2	168" CIDH	16430	N/A	268.00	TBD	124.00
	Col 3	144" CIDH	13860	N/A	273.00	TBD	131.00
	Col 4	144" CIDH	10150	N/A	273.00	TBD	166.00

PILE DATA TABLE (Cont)

LOCATION		PILE TYPE	NOMINAL RESISTANCE (kips) COMPRESSION	NOMINAL RESISTANCE (kips) TENSION	CUT-OFF ELEVATION (ft)	DESIGN TIP ELEVATION (ft)	SPECIFIED TIP ELEVATION (ft)
BENT 7	Col 1	144" CIDH	6150	N/A	250.00	TBD	174.00
	Col 2	144" CIDH	7000	N/A	250.00	TBD	165.00
	Col 3	144" CIDH	7290	N/A	250.00	TBD	163.00
	Col 4	144" CIDH	8000	N/A	250.00	TBD	156.00
BENT 8	Col 1	144" CIDH	6880	N/A	253.00	TBD	169.00
	Col 2	144" CIDH	6430	N/A	253.00	TBD	172.00
	Col 3	144" CIDH	6720	N/A	253.00	TBD	170.00
	Col 4	144" CIDH	8150	N/A	253.00	TBD	156.00
BENT 9	Col 1	144" CIDH	6400	N/A	253.00	TBD	173.00
	Col 2	144" CIDH	4720	N/A	253.00	TBD	181.00
	Col 3	144" CIDH	4600	N/A	253.00	TBD	181.00
	Col 4	144" CIDH	5920	N/A	253.00	TBD	179.00
Abut 10		60" CIDH	1900	N/A	266.25	TBD	209.25

Original plan submittal made in Aug. 2019

Rev No.	Date	Description
1	3/21	Updated to show modified structural design
2	12/21	
3	6/22	

TYPE SELECTION PLANS - NOT FOR CONSTRUCTION

Preliminary

DESIGN OVERSIGHT

SIGN OFF DATE

	BY	CHECKED
DESIGN	K. Hickey	X
DETAILS	T. Doung	X
QUANTITIES	X	X

PREPARED FOR THE STATE OF CALIFORNIA DEPARTMENT OF TRANSPORTATION

Dan Weddell
PROJECT ENGINEER

BRIDGE No. X
POST MILE 0.56

LAUS VIADUCT OVER US-101
FOUNDATION DATA

DESIGN DETAIL SHEET (ENGLISH) (REVISION 4/19/2018)

DATE PLOTTED => 01-APR-2020 TIME PLOTTED => 11:15
FILE => ze-fdat01-CMG.dgn USERNAME => Jarvis

ORIGINAL SCALE IN INCHES FOR REDUCED PLANS 0 1 2 3

UNIT: X
PROJECT NUMBER & PHASE: X CONTRACT No.: X

DISREGARD PRINTS BEARING EARLIER REVISION DATES →

REVISION DATES				SHEET	OF
8/01/19	3/05/21			11	14

Dist	COUNTY	ROUTE	POST MILES TOTAL PROJECT	SHEET No.	TOTAL SHEETS
07	LA	10S, 101	17.2/17.5, 0.4/0.7	31	34

REGISTERED CIVIL ENGINEER — DATE

PLANS APPROVAL DATE

REGISTERED PROFESSIONAL ENGINEER — KATIE L. HICKEY — No. C82783 — Exp. 9/30/20 — CIVIL — STATE OF CALIFORNIA

THE STATE OF CALIFORNIA OR ITS OFFICERS OR AGENTS SHALL NOT BE RESPONSIBLE FOR THE ACCURACY OR COMPLETENESS OF SCANNED COPIES OF THIS PLAN SHEET.

WKE, Inc.
1851 EAST FIRST STREET, SUITE 1400
SANTA ANA, CA 92705

METROPOLITAN TRANSPORTATION AUTHORITY
ONE GATEWAY PLAZA
LOS ANGELES, CA 90012

EXISTING UTILITIES

2 LABOE STORM DRAIN (PROTECT IN PLACE)
3 BOSL POWER
4 LABOS SEWER (PROTECT IN PLACE)
5 UNK POWER (RELOCATE)
6 PVT WATER (RELOCATE)
7 LADWP POWER (RELOCATE)
8 AT&T TELECOM (RELOCATE)
9 SCG GAS (RELOCATE)
10 UNK SEWER (REMOVE)
11 LABOE 12'X12' ARCHED RCB (PROTECT IN PLACE)

LEGEND:

New structure
144" OR 168" Dia CIDH Concrete Pile (at bents)
60" Dia CIDH Concrete Pile (at abutments)
XXXX.X Bottom of footing elevation

CURVE DATA

(A) ℄ Const LINE	(B) ℄ Const LINE	(C) ℄ Const LINE
R = 696.82'	R = 656.00'	R = 343.52'
Δ = 27°59'16"	Δ = 20°41'00"	Δ = 20°13'22"
T = 173.66'	T = 119.71'	T = 61.26'
L = 340.38'	L = 236.81'	L = 121.25'

NOTES:

1. The types and locations of all utilities are provided for information only. The Contractor must verify all existing utilities and notify utility agencies prior to any removal relocation, or new construction, see "ROADWAY PLANS" for utility details not shown.
2. Not all pile shown for clarity.
3. Utilities not impacted by structure are not labeled for clarity.

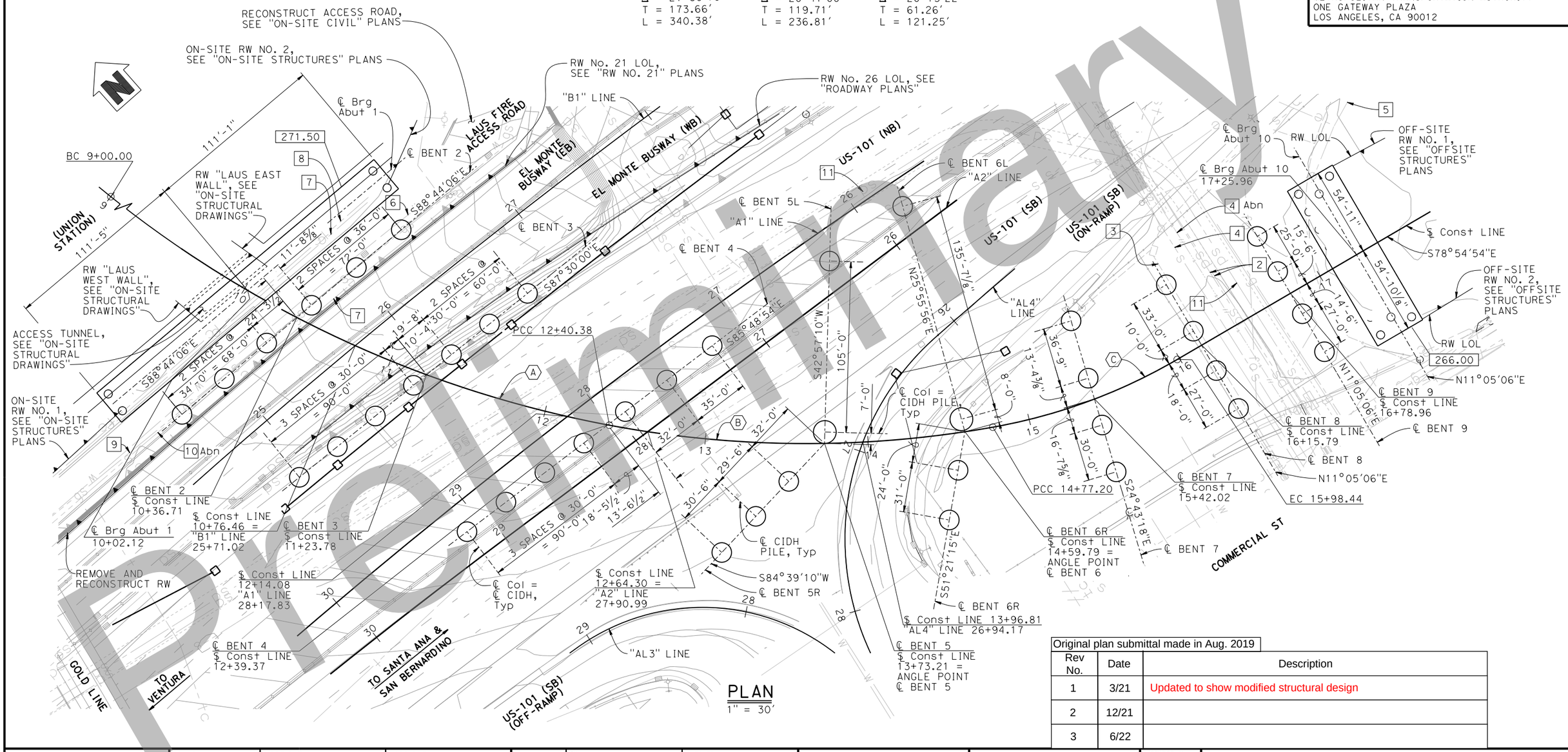

PLAN
1" = 30'

Original plan submittal made in Aug. 2019

Rev No.	Date	Description
1	3/21	Updated to show modified structural design
2	12/21	
3	6/22	

TYPE SELECTION PLANS - NOT FOR CONSTRUCTION

Preliminary

X
DESIGN OVERSIGHT

X
SIGN OFF DATE

SCALE: X | VERT.DATUM X | HORZ.DATUM X
PHOTOGRAMMETRY AS OF: X | ALIGNMENT TIES: X
SURVEYED BY X | DRAFTED BY X
FIELD CHECKED BY X | CHECKED BY X

	BY	CHECKED
DESIGN	K. Hickey	X
DETAILS	T. Doung	X
QUANTITIES	X	X

PREPARED FOR THE STATE OF CALIFORNIA DEPARTMENT OF TRANSPORTATION

Dan Weddell
PROJECT ENGINEER

BRIDGE No. X
POST MILE 0.56

LAUS VIADUCT OVER US-101
FOUNDATION PLAN

FOUNDATION PLAN SHEET (ENGLISH) (REVISION 4/19/2018)

X
GEOTECHNICAL PROFESSIONAL

X
APPROVAL DATE

DATE PLOTTED => 01-APR-2020 TIME PLOTTED => 10:51
FILE => ze-fdp101-CMG.dgn USERNAME => TDoung
ORIGINAL SCALE IN INCHES FOR REDUCED PLANS 0 1 2 3

UNIT: X
PROJECT NUMBER & PHASE: X CONTRACT No.: X

DISREGARD PRINTS BEARING EARLIER REVISION DATES →

REVISION DATES				SHEET	OF
8/01/19	3/05/21			12	14

SHEET NO 36

Dist	COUNTY	ROUTE	POST MILES TOTAL PROJECT	SHEET No.	TOTAL SHEETS
07	LA	10S, 101	17.2/17.5, 0.4/0.7	32	34

REGISTERED CIVIL ENGINEER _____ DATE _____

PLANS APPROVAL DATE _____

REGISTERED PROFESSIONAL ENGINEER
KATIE L. HICKEY
No. C82783
Exp. 9/30/20
CIVIL
STATE OF CALIFORNIA

THE STATE OF CALIFORNIA OR ITS OFFICERS OR AGENTS SHALL NOT BE RESPONSIBLE FOR THE ACCURACY OR COMPLETENESS OF SCANNED COPIES OF THIS PLAN SHEET.

WKE, Inc.
1851 EAST FIRST STREET, SUITE 1400
SANTA ANA, CA 92705

METROPOLITAN TRANSPORTATION AUTHORITY
ONE GATEWAY PLAZA
LOS ANGELES, CA 90012

NOTES:

(D) Concrete Barrier (Type 842)

(L) Temporary railing Type K

(F) Chain Link Railing (Type 7)

LEGEND:

A — Girder Designation

Closure pour

Bridge removal (portion)

Ballast

* Measured radially to ℄ Track

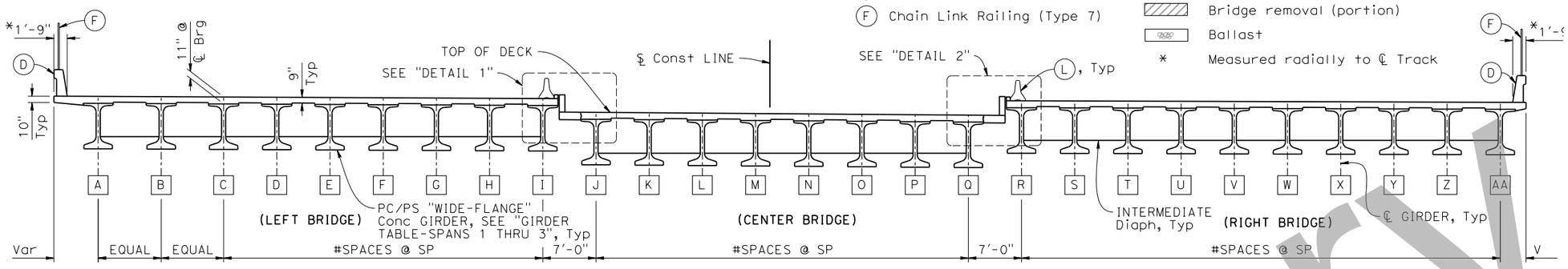

NOTE:
Span 2 shown,
Spans 1 and 3 similar.

TYPICAL SECTION - SPANS 1 THRU 3

1/8" = 1'-0"

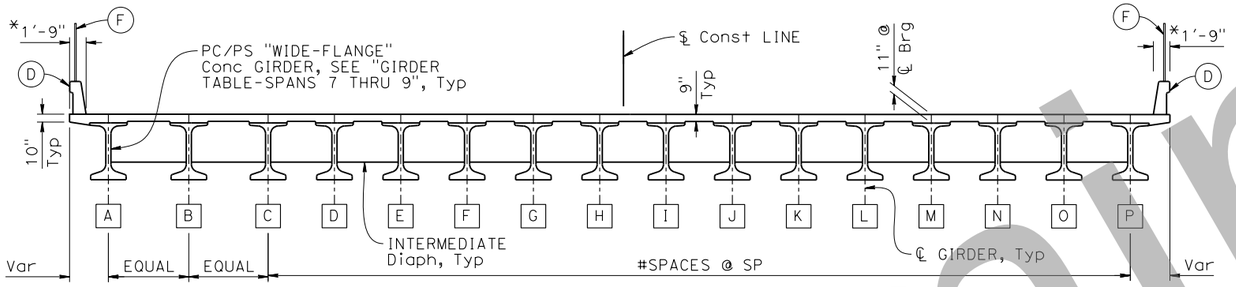

TYPICAL SECTION - SPANS 7 THRU 9

1/8" = 1'-0"

NOTE:
Span 8 shown,
spans 7 and 9 similar.

GIRDER TABLE - SPANS 1 THRU 3								
GIRDER SIZE	TOTAL NO. OF GIRDERS	LOCATION	LEFT BRIDGE		CENTER BRIDGE		RIGHT BRIDGE	
			#SPACES	SP	#SPACES	SP	#SPACES	SP
48" PC/PS "WIDE-FLANGE" CONCRETE GIRDER	28	SPAN 1	7	7'-0"	7	7'-0"	9	7'-0"
72" PC/PS "WIDE-FLANGE" CONCRETE GIRDER	27	SPAN 2	6	7'-0"	7	7'-0"	9	7'-0"
102" PC/PS "WIDE-FLANGE" CONCRETE GIRDER WITH POST-TENSIONING	25	SPAN 3	4	7'-0"	8	7'-0"	8	7'-0"

GIRDER TABLE - SPANS 7 THRU 9				
GIRDER SIZE	TOTAL NO. OF GIRDERS	LOCATION	#SPACES	SP
72" PC/PS "WIDE-FLANGE" CONCRETE GIRDER	17	SPAN 7	14	7'-0"
	16	SPAN 8	13	7'-0"
	16	SPAN 9	13	7'-0"

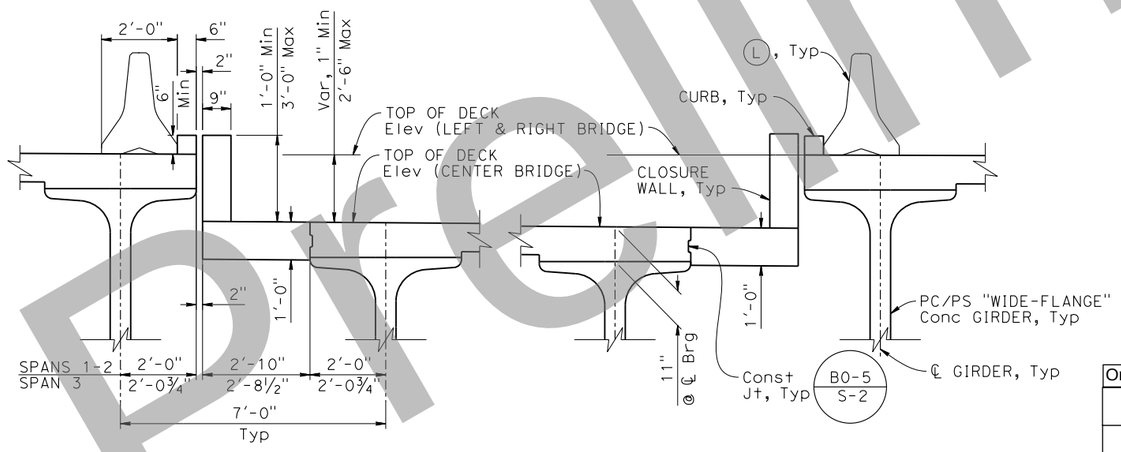

DECK JOINT - SPANS 1 THRU 3

1/2" = 1'-0"

Original plan submittal made in Aug. 2019

Rev No.	Date	Description
1	3/21	Plan added to set
2	12/21	
3	6/22	

TYPE SELECTION PLANS - NOT FOR CONSTRUCTION

Preliminary

DESIGN	BY K. Hickey	CHECKED X	PREPARED FOR THE STATE OF CALIFORNIA DEPARTMENT OF TRANSPORTATION	Dan Weddell PROJECT ENGINEER	BRIDGE No. X
DETAILS	BY T. Doung	CHECKED X			POST MILE 0.56
QUANTITIES	BY X	CHECKED X			

LAUS VIADUCT OVER US-101

TYPICAL SECTIONS NO. 1

X DESIGN OVERSIGHT

X SIGN OFF DATE

DESIGN DETAIL SHEET (ENGLISH) (REVISION 4/19/2018)

DATE PLOTTED => 01-APR-2020 TIME PLOTTED => 10:51
FILE => zk-ts01-CMG.dgn USERNAME => TDoung

ORIGINAL SCALE IN INCHES FOR REDUCED PLANS 0 1 2 3

UNIT: X
PROJECT NUMBER & PHASE: X
CONTRACT No.: X

DISREGARD PRINTS BEARING EARLIER REVISION DATES →

REVISION DATES				SHEET	OF
8/01/19	3/05/21			13	14

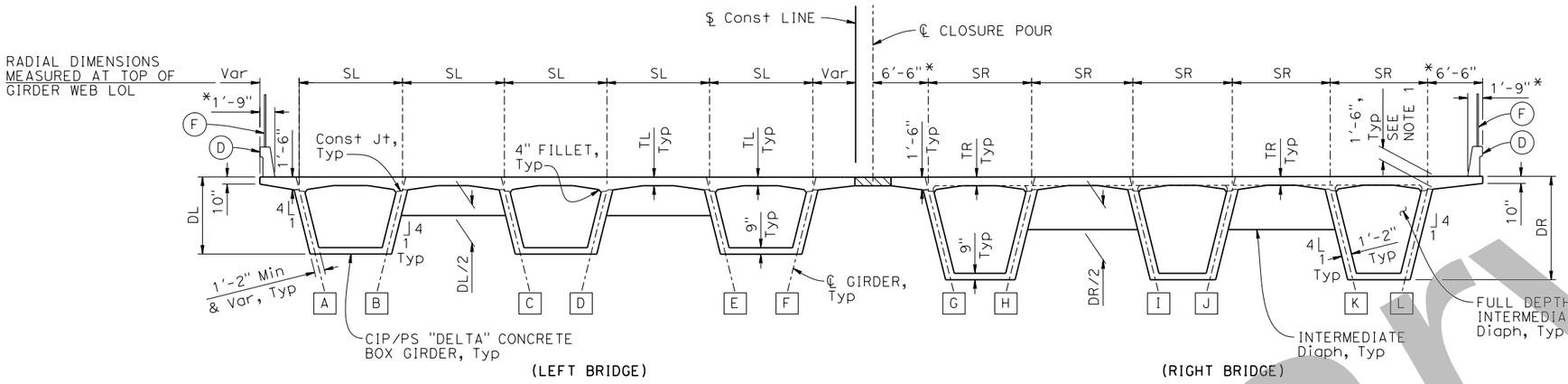

TYPICAL SECTION - SPANS 4 THRU 6

1/8" = 1'-0"

NOTE:
Typical section in Span 5 shown typical section in Spans 4 and 6 similar.

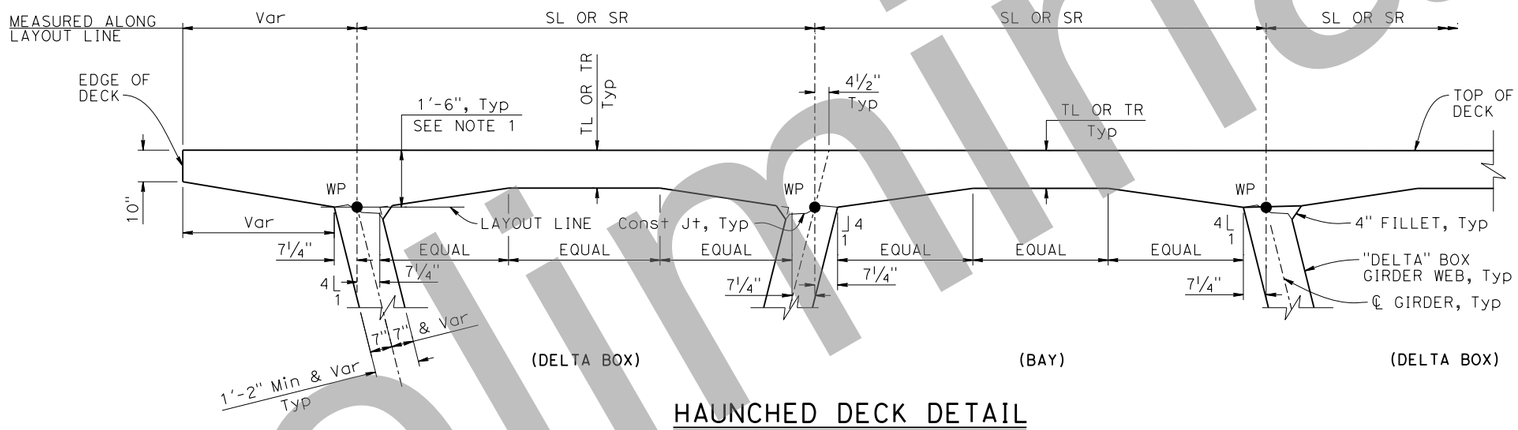

HAUNCHED DECK DETAIL

1/2" = 1'-0"

DIMENSIONS TABLE

LOCATION	SL	SR	TL	TR	DL	DR
SPAN 4	12'-0"	Var 15'-6" TO 13'-0"	1'-0"	1'-0"	11'-0"	13'-6"
SPAN 5	12'-0"	Var 13'-0" TO 10'-6"	1'-0"	1'-0"	Var 11'-0" TO 9'-0"	Var 13'-6" TO 12'-0"
SPAN 6	12'-0"	Var 10'-6" TO 9'-0"	1'-0"	1'-0"	9'-0"	Var 12'-0" TO 10'-0"

* Measured radially to edge of deck or ℄ Construction Line

Dist	COUNTY	ROUTE	POST MILES TOTAL PROJECT	SHEET No.	TOTAL SHEETS
07	LA	10S, 101	17.2/17.5, 0.4/0.7	33	34

REGISTERED CIVIL ENGINEER DATE

PLANS APPROVAL DATE

REGISTERED PROFESSIONAL ENGINEER — KATIE L. HICKEY — No. C82783 — Exp. 9/30/20 — CIVIL — STATE OF CALIFORNIA

THE STATE OF CALIFORNIA OR ITS OFFICERS OR AGENTS SHALL NOT BE RESPONSIBLE FOR THE ACCURACY OR COMPLETENESS OF SCANNED COPIES OF THIS PLAN SHEET.

WKE, Inc.
1851 EAST FIRST STREET, SUITE 1400
SANTA ANA, CA 92705

METROPOLITAN TRANSPORTATION AUTHORITY
ONE GATEWAY PLAZA
LOS ANGELES, CA 90012

NOTES:

(D) Concrete Barrier (Type 842)

(F) Chain Link Railing (Type 7)

LEGEND:

A — Girder Designation

Closure pour (4'-0")

WP — Working point

NOTE:

1. Provide constant thickness deck without haunch at Span 6 right bridge only.

TYPE SELECTION PLANS - NOT FOR CONSTRUCTION

Original plan submittal made in Aug. 2019

Rev No.	Date	Description
1	3/21	Plan added to set
2	12/21	
3	6/22	

Preliminary

DESIGN OVERSIGHT

SIGN OFF DATE

	BY	CHECKED
DESIGN	K. Hickey	X
DETAILS	T. Doung	X
QUANTITIES	X	X

PREPARED FOR THE STATE OF CALIFORNIA DEPARTMENT OF TRANSPORTATION

Dan Weddell
PROJECT ENGINEER

BRIDGE No. X
POST MILE 0.56

LAUS VIADUCT OVER US-101
TYPICAL SECTIONS NO. 2

DESIGN DETAIL SHEET (ENGLISH) (REVISION 4/19/2018)

DATE PLOTTED => 01-APR-2020 TIME PLOTTED => 10:51
FILE => zk-ts02-CMG.dgn USERNAME => TDoung

ORIGINAL SCALE IN INCHES FOR REDUCED PLANS 0 1 2 3

UNIT: X
PROJECT NUMBER & PHASE: X CONTRACT No.: X

DISREGARD PRINTS BEARING EARLIER REVISION DATES →

REVISION DATES: 8/01/19 | 3/05/21 | | |

SHEET 14 OF 14

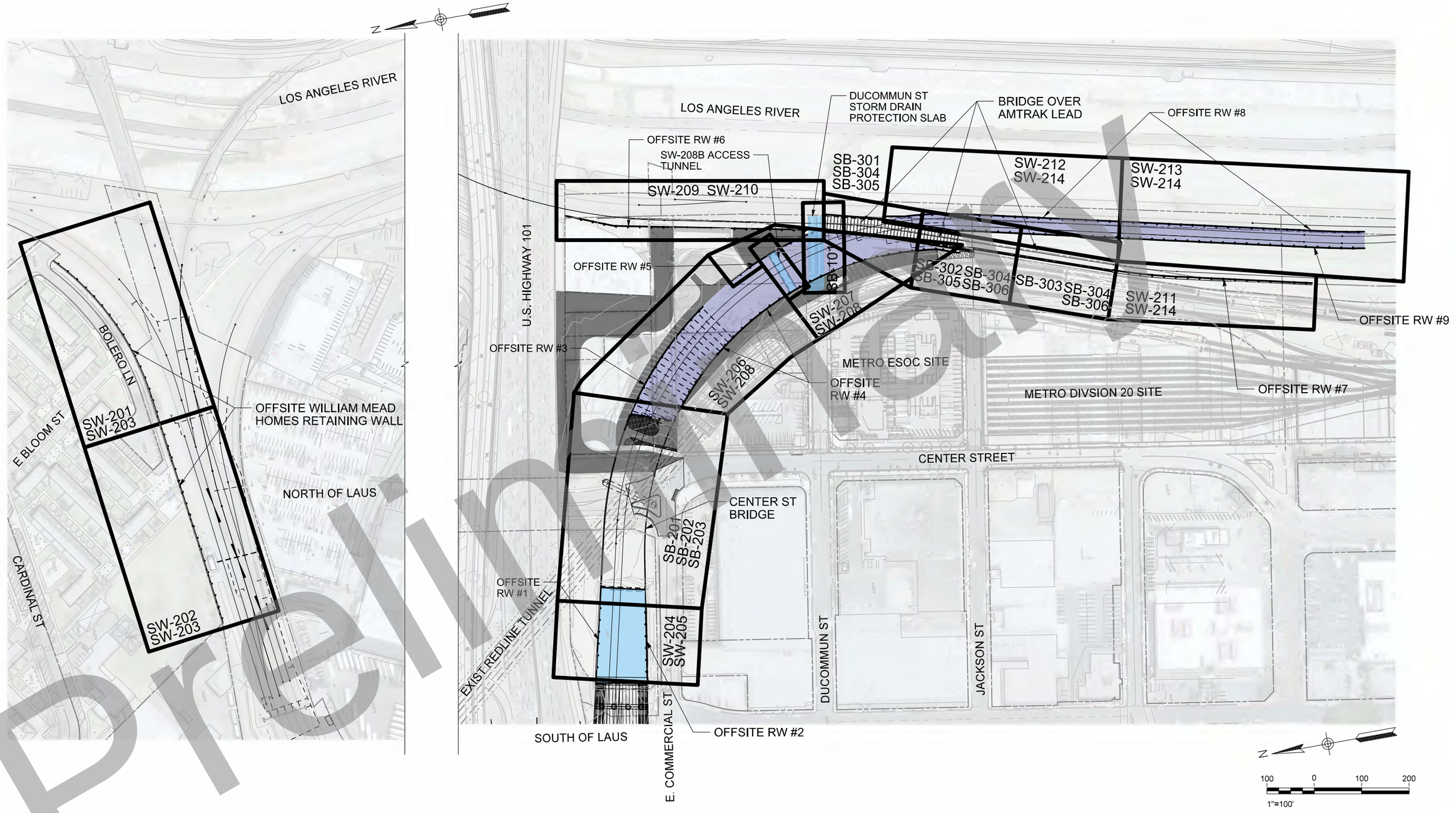

35% DESIGN PLANS
NOT FOR CONSTRUCTION

Original plan submittal made in Aug. 2019

Rev No.	Date	Description
1	3/21	
2	12/21	
3	6/22	

THE PREPARATION OF THIS DRAWING HAS BEEN FINANCED IN PART THROUGH A GRANT FROM THE U.S. DEPARTMENT OF TRANSPORTATION, FEDERAL TRANSIT ADMINISTRATION (FTA), UNDER THE FEDERAL TRANSIT ACT OF 1964, AS AMENDED, AND IN PART BY THE TAXES OF THE CITIZENS OF LOS ANGELES COUNTY AND OF THE STATE OF CALIFORNIA.

DESIGNED BY P. ZHANG
DRAWN BY G. WEI
CHECKED BY C. LI
IN CHARGE T. KIM
DATE 8/01/2019

REGISTERED PROFESSIONAL ENGINEER — No. Exp. CIVIL — STATE OF CALIFORNIA

Metro
LOS ANGELES COUNTY METROPOLITAN TRANSPORTATION AUTHORITY
IDC CONSULTING ENGINEERS 300 S HARBOR BLVD, SUITE 740 ANAHEIM, CA 92805 (714) 523-0070
HDR ENGINEERING 350 S. GRAND AVENUE SUITE 2000 LOS ANGELES, CA 90071 (213) 239-5800

SUBMITTED: _____ PROJECT MANAGER
APPROVED: _____

LINK UNION STATION PROJECT
OFFSITE STRUCTURES KEY MAP

CONTRACT NO
DRAWING NO S-002
REV
SCALE 1"=100'
SHEET NO 39

Preliminary

Plot Driver=SCRIP-11X17bw_pdf.pltcfg Pentable=PlotStamp.tbl USER = Gary 9:37:43 AM 3/7/2022 c:\pwworking\sac\d100383\tLUS-S002.dgn

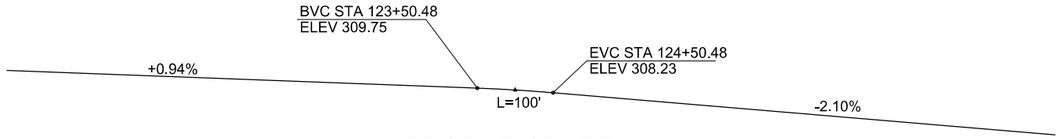

PROFILE GRADE
NO SCALE

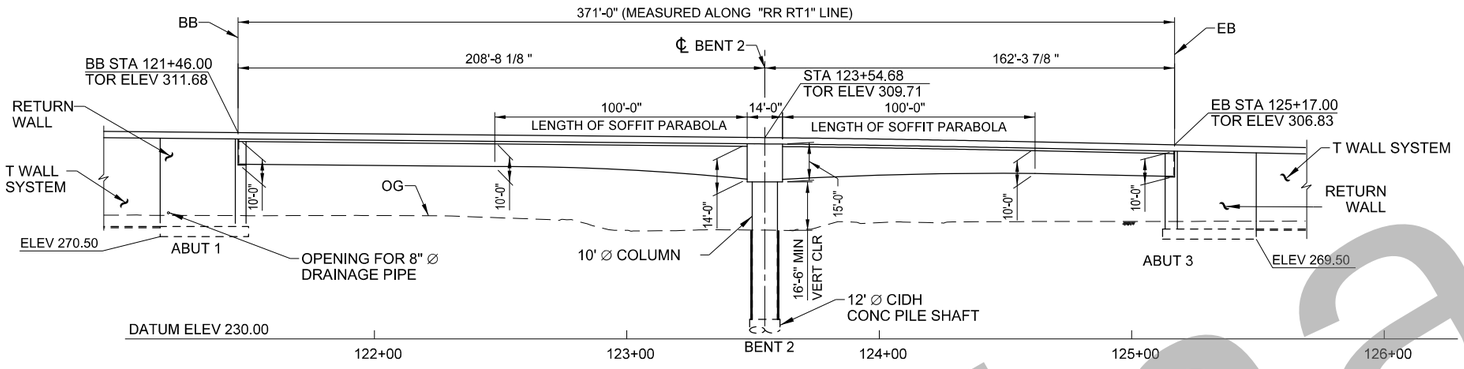

DEVELOPED ELEVATION
SCALE: 1"= 30'

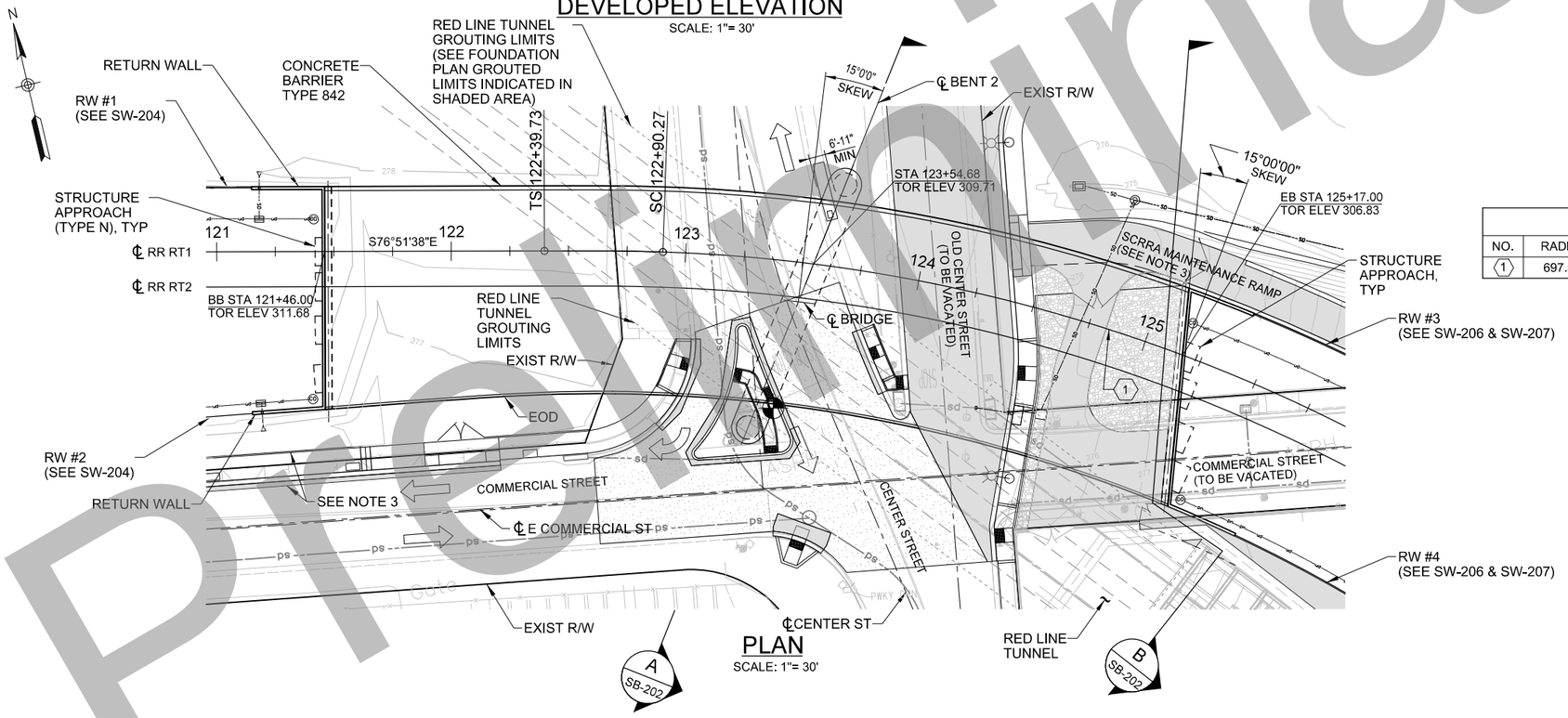

PLAN
SCALE: 1"= 30'

LEGEND:

- POINT OF MIN VERT CLEARANCE
- DIRECTION OF TRAFFIC

NOTES:

1. SEE UTILITY PLANS FOR EXIST UTILITIES.
2. SEE DRANAGE PLANS FOR SUBDRAIN LOCATIONS.
3. SEE ROADWAY PLANS FOR ROADWAY IMPROVEMENTS.
4. SEE SB-202 FOR TYPICAL SECTION.
5. SEE TRACK PLANS FOR DETAILS OF PROPOSED TRACK CONSTRUCTION.

NOTES FOR QUANTITY ESTIMATE:

1. FOR ABUTMENTS, THE FOLLOWING DIMENSIONS ARE ASSUMED:
   BACKWALL THICKNESS: 1'-0"
   STEM WALL THICKNESS: 4'-0"
   FOOTING WIDTH: 35'-0"
   FOOTING THICKNESS: 4'-0"
   EDGE OF TOE TO EDGE OF STEM WALL: 1'-0"
   RETURN WALL THICKNESS: 2'-6"
2. GIRDER DEPTH AND GEOMETRY AS SHOWN IN " DEVELOPED ELEVATION".
3. PTFE SPHERICAL BEARINGS: 10 AT EACH ABUTMENT, TOTAL 20.

CURVE DATA

NO.	RADIUS	△	LENGTH	TANGENT	Ls	Ea	Eu	V
1	697.50'	85°39'09.5"	1042.71'	646.49'	50.55'	0.50"	3.25"	25MPH

30 0 30 60
1"=30'

35% DESIGN PLANS
NOT FOR CONSTRUCTION

Original plan submittal made in Aug. 2019

THE PREPARATION OF THIS DRAWING HAS BEEN FINANCED IN PART THROUGH A GRANT FROM THE U.S. DEPARTMENT OF TRANSPORTATION, FEDERAL TRANSIT ADMINISTRATION (FTA), UNDER THE FEDERAL TRANSIT ACT OF 1964, AS AMENDED, AND IN PART BY THE TAXES OF THE CITIZENS OF LOS ANGELES COUNTY AND OF THE STATE OF CALIFORNIA.

Rev No.	Date	Description
1	3/21	Bridge design updated to shift column out of Center St
2	12/21	
3	6/22	Updated to show modified intersection and access road design

DESIGNED BY P. ZHANG
DRAWN BY G. WEI
CHECKED BY C. LI
IN CHARGE T. KIM
DATE 6/01/2022

REGISTERED PROFESSIONAL ENGINEER No. Exp. CIVIL STATE OF CALIFORNIA

Metro
LOS ANGELES COUNTY METROPOLITAN TRANSPORTATION AUTHORITY

IDC CONSULTING ENGINEERS
300 S HARBOR BLVD., SUITE 700
ANAHEIM, CA 92805
(714) 520-9070

HDR ENGINEERING
350 S. GRAND AVENUE SUITE 2800
LOS ANGELES, CA 90071
(213) 236-5800

SUBMITTED: _____ PROJECT MANAGER
APPROVED: _____

LINK UNION STATION PROJECT
OFFSITE STRUCTURES
CENTER STREET BRIDGE
GENERAL PLAN

CONTRACT NO
DRAWING NO SB-201
REV
SCALE 1"=30'
SHEET NO 40

Preliminary

c:\pwworking\sac\d1004743\LUS-SB201-CSB-GP.dgn 3/7/2022 10:02:11 AM USER = Gary Plot Driver=SCRIP-11X17bw_pdf.pltcfg Pentable=PlotStamp.tbl

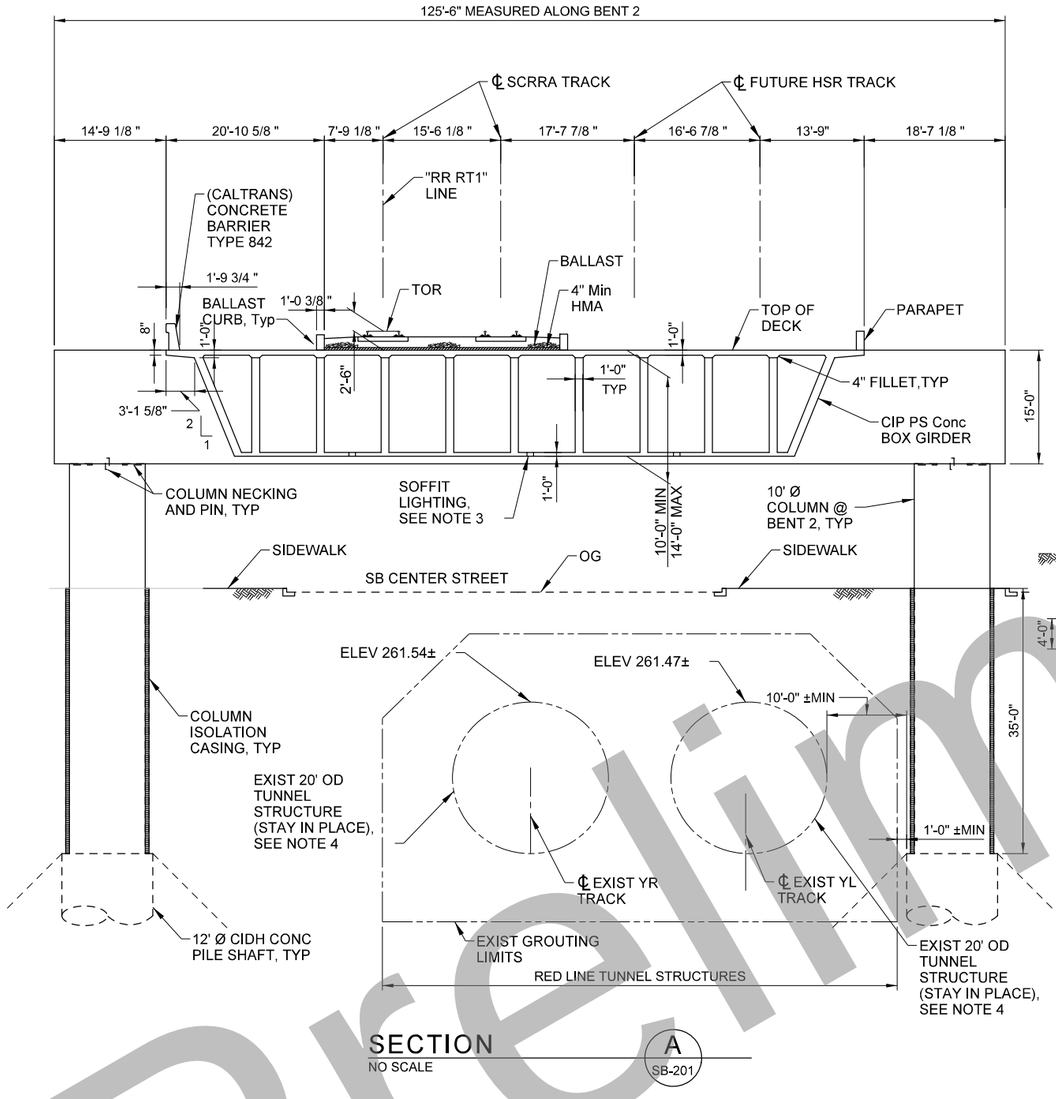

SECTION A
NO SCALE
SB-201

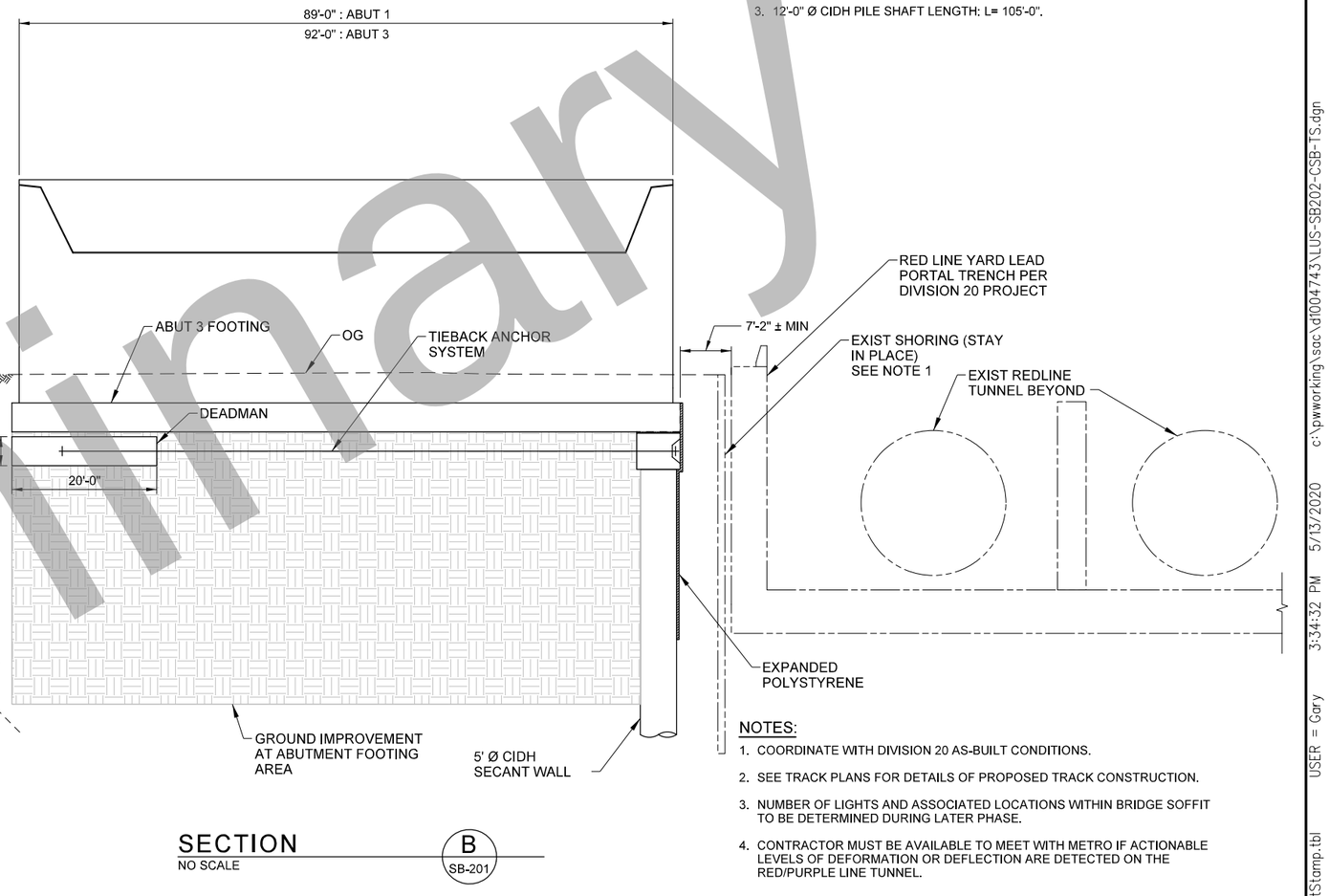

SECTION B
NO SCALE
SB-201

NOTES FOR QUANTITY ESTIMATE:

1. TYPICAL SECTION DIMENSIONS SHOWN ARE FOR QUANTITY ESTIMATION PURPOSE ONLY.
2. STEEL COLUMN CASING ASSUMED: ID = 11'-0", THICKNESS = 1/2".
3. 12'-0" Ø CIDH PILE SHAFT LENGTH: L= 105'-0".

NOTES:

1. COORDINATE WITH DIVISION 20 AS-BUILT CONDITIONS.
2. SEE TRACK PLANS FOR DETAILS OF PROPOSED TRACK CONSTRUCTION.
3. NUMBER OF LIGHTS AND ASSOCIATED LOCATIONS WITHIN BRIDGE SOFFIT TO BE DETERMINED DURING LATER PHASE.
4. CONTRACTOR MUST BE AVAILABLE TO MEET WITH METRO IF ACTIONABLE LEVELS OF DEFORMATION OR DEFLECTION ARE DETECTED ON THE RED/PURPLE LINE TUNNEL.

Preliminary

35% DESIGN PLANS
NOT FOR CONSTRUCTION

Original plan submittal made in Aug. 2019

THE PREPARATION OF THIS DRAWING HAS BEEN FINANCED IN PART THROUGH A GRANT FROM THE U.S. DEPARTMENT OF TRANSPORTATION, FEDERAL TRANSIT ADMINISTRATION (FTA), UNDER THE FEDERAL TRANSIT ACT OF 1964, AS AMENDED, AND IN PART BY THE TAXES OF THE CITIZENS OF LOS ANGELES COUNTY AND OF THE STATE OF CALIFORNIA.

Rev No.	Date	Description
1	3/21	Bridge design updated to shift column out of Center St
2	12/21	
3	6/22	

DESIGNED BY P. ZHANG
DRAWN BY G. WEI
CHECKED BY C. LI
IN CHARGE T. KIM
DATE 3/05/2021

REGISTERED PROFESSIONAL ENGINEER — No. Exp. CIVIL — STATE OF CALIFORNIA

Metro
LOS ANGELES COUNTY METROPOLITAN TRANSPORTATION AUTHORITY
IDC CONSULTING ENGINEERS 300 S HARBOR BLVD. SUITE 710 ANAHEIM, CA 92805 (714) 520-9070
HDR ENGINEERING 350 S. GRAND AVENUE SUITE 2500 LOS ANGELES, CA 90071 (213) 239-5800

SUBMITTED: _____ PROJECT MANAGER
APPROVED: _____

LINK UNION STATION PROJECT
OFFSITE STRUCTURES
CENTER STREET BRIDGE
TYPICAL SECTION

CONTRACT NO
DRAWING NO SB-202
REV
SCALE NO SCALE
SHEET NO 41

Plot Driver=SCRIP-11X17bw_pdf.pltcfg Pentable=PlotStamp.tbl USER = Gary 3:34:32 PM 5/13/2020 c:\pwworking\sac\d1004743\LUS-SB202-CSB-TS.dgn

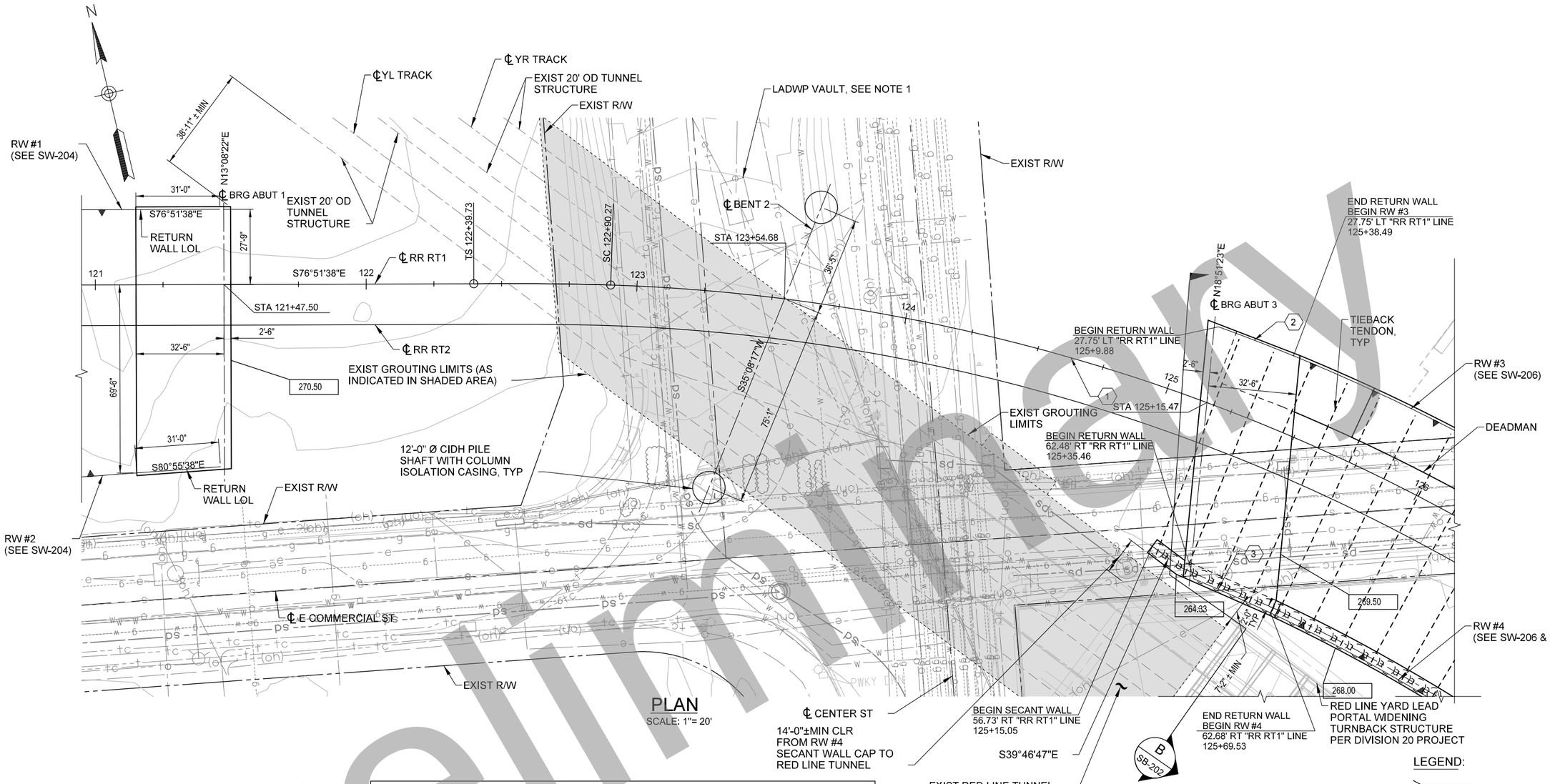

PLAN
SCALE: 1"= 20'

CURVE DATA								
NO.	RADIUS	△	LENGTH	TANGENT	Ls	Ea	Eu	V
1	697.50'	85°39'09.5"	1042.71'	646.49'	50.55'	0.50"	3.25"	25MPH
2	725.25'	2°20'59"	29.74'	14.88'				
3	636.75'	2°47'21"	31.00'	15.51'				

LEGEND:

- XXX.XX — BOTTOM OF FTG ELEV
- ○ — DENOTES CIDH PILE
- EXIST RED TUNNEL GROUTING LIMITS

NOTES:

1. SEE UTILITY PLANS FOR EXISTING UTILITIES, LADWP VAULT TO STAY IN PLACE.
2. SEE DRAINAGE PLANS FOR UNDERDRAIN LOCATIONS.
3. SEE TRACK PLANS FOR TRACK RELATED WORK.
4. SEE TRACK PLANS FOR DETAILS OF PROPOSED TRACK CONSTRUCTION.

35% DESIGN PLANS
NOT FOR CONSTRUCTION

Preliminary

Original plan submittal made in Aug. 2019

THE PREPARATION OF THIS DRAWING HAS BEEN FINANCED IN PART THROUGH A GRANT FROM THE U.S. DEPARTMENT OF TRANSPORTATION, FEDERAL TRANSIT ADMINISTRATION (FTA), UNDER THE FEDERAL TRANSIT ACT OF 1964, AS AMENDED, AND IN PART BY THE TAXES OF THE CITIZENS OF LOS ANGELES COUNTY AND OF THE STATE OF CALIFORNIA.

Rev No.	Date	Description
1	3/21	Bridge design updated to shift column out of Center St
2	12/21	
3	6/22	

DESIGNED BY P. ZHANG
DRAWN BY G. WEI
CHECKED BY C. LI
IN CHARGE T. KIM
DATE 3/05/2021

REGISTERED PROFESSIONAL ENGINEER — No. ____ Exp. ____ CIVIL — STATE OF CALIFORNIA

Metro
LOS ANGELES COUNTY METROPOLITAN TRANSPORTATION AUTHORITY
IDC CONSULTING ENGINEERS 300 S. HARBOR BLVD., SUITE 710 ANAHEIM, CA 92805 (714) 520-5070
HDR ENGINEERING 350 S. GRAND AVENUE SUITE 2200 LOS ANGELES, CA 90071 (213) 236-0800

SUBMITTED: _____ PROJECT MANAGER
APPROVED: _____

LINK UNION STATION PROJECT
OFFSITE STRUCTURES
CENTER STREET BRIDGE FOUNDATION PLAN

CONTRACT NO
DRAWING NO SB-203 REV
SCALE 1"=20'
SHEET NO 42

Plot Driver=SCRIP-11X17bw_pdf.pltcfg Pentable=PlotStamp.tbl USER = Gary 8:44:04 AM 5/13/2020 c:\pwworking\sac\d1004743\LUS-SB203-CSB-FDN.dgn

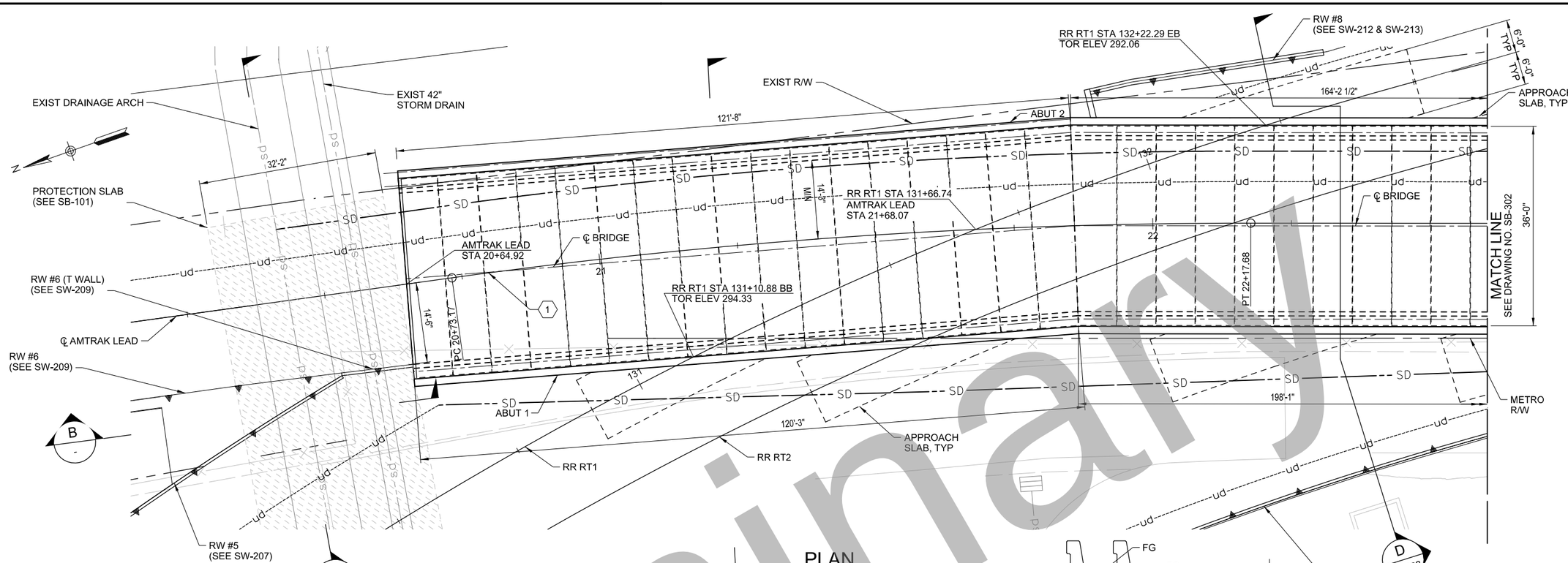

CURVE DATA				
NO.	RADIUS	△	LENGTH	TANGENT
1	1042.14'	7°56'52.8"	144.56'	72.4'

SECTION
1"=10'-0"
B
-

SECTION
1"=5'-0"
A
-

NOTES:
1. SEE UTILITY PLANS FOR EXISTING UTILITIES.
2. SEE DRAINAGE PLANS FOR UNDERDRAIN LOCATIONS.
3. SEE TRACK PLANS FOR DETAILS OF PROPOSED TRACK CONSTRUCTION.
4. CURVE DATA INFORMATION NOT SHOWN SEE FOUNDATION PLAN.

NOTES FOR QUANTITY ESTIMATE:
1. MICROPILE CENTER TO CENTER SPACING = 6'-0" TYP.

35% DESIGN PLANS
NOT FOR CONSTRUCTION

Preliminary

Original plan submittal made in Aug. 2019

THE PREPARATION OF THIS DRAWING HAS BEEN FINANCED IN PART THROUGH A GRANT FROM THE U.S. DEPARTMENT OF TRANSPORTATION, FEDERAL TRANSIT ADMINISTRATION (FTA), UNDER THE FEDERAL TRANSIT ACT OF 1964, AS AMENDED, AND IN PART BY THE TAXES OF THE CITIZENS OF LOS ANGELES COUNTY AND OF THE STATE OF CALIFORNIA.

Rev No.	Date	Description
1	3/21	Curve data table added
2	12/21	
3	6/22	

DESIGNED BY C. LI
DRAWN BY G. WEI
CHECKED BY P. ZHANG
IN CHARGE T. KIM
DATE 3/05/2021

REGISTERED PROFESSIONAL ENGINEER — No. ____ Exp. ____ CIVIL — STATE OF CALIFORNIA

Metro
LOS ANGELES COUNTY
METROPOLITAN TRANSPORTATION AUTHORITY

IDC CONSULTING ENGINEERS
300 S. HARBOR BLVD., SUITE 710
ANAHEIM, CA 92805
(714) 520-0570

HDR ENGINEERING
350 S. GRAND AVENUE
SUITE 2200
LOS ANGELES, CA 90071
(213) 2356800

SUBMITTED: _____ PROJECT MANAGER
APPROVED: _____

LINK UNION STATION PROJECT
OFFSITE STRUCTURES
BRIDGE OVER AMTRAK LEAD
GENERAL PLAN 1 OF 3

CONTRACT NO
DRAWING NO SB-301 REV
SCALE AS NOTED
SHEET NO 43

Plot Driver=SCRP-11X17bw_pdf.pltcfg Pentable=PlotStamp.tbl USER = Gary 8:44:22 AM 5/13/2020 c:\pwworking\sac\d1005113\LUS-SB301-AMT-GP01.dgn

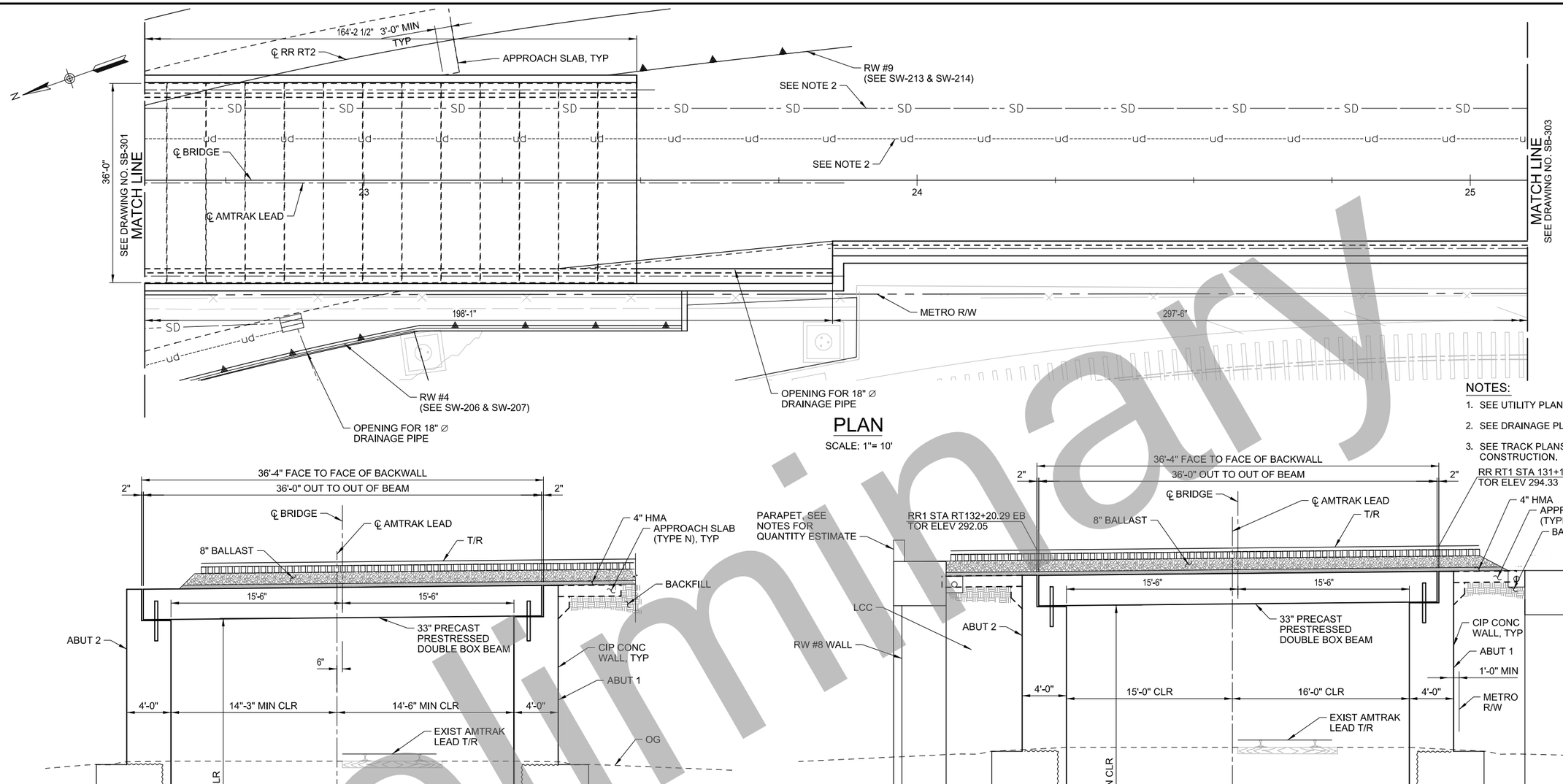

PLAN

SCALE: 1"= 10'

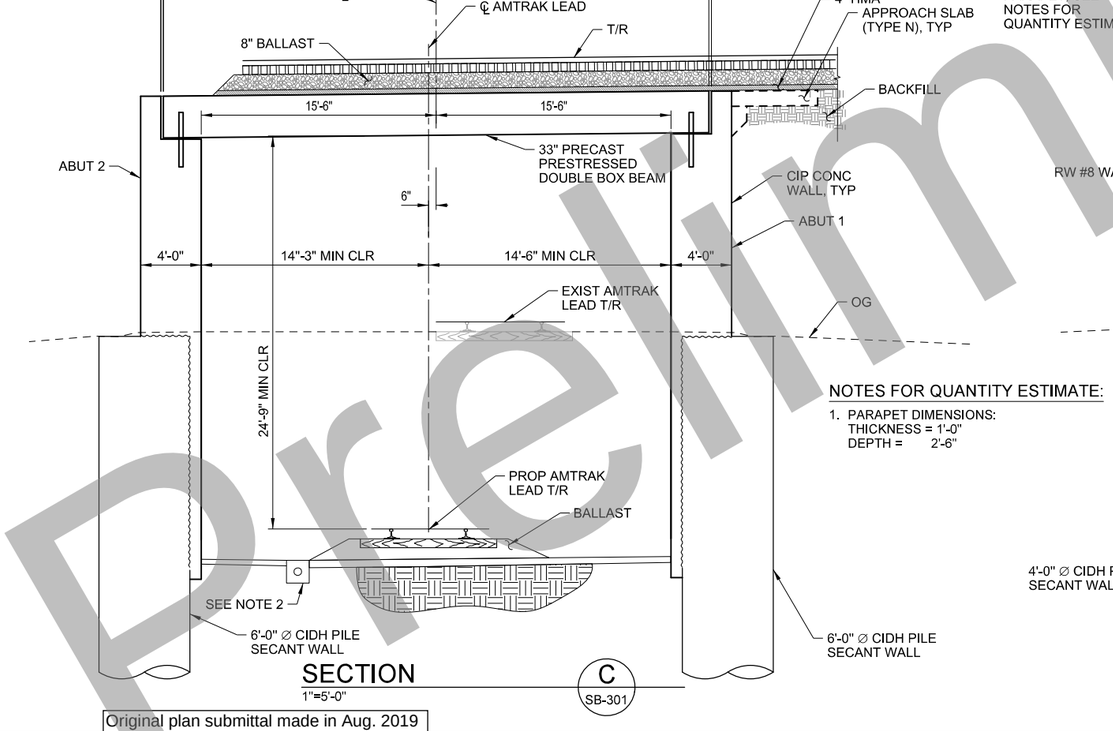

SECTION C

1"=5'-0"

SB-301

NOTES FOR QUANTITY ESTIMATE:

1. PARAPET DIMENSIONS:
   THICKNESS = 1'-0"
   DEPTH = 2'-6"

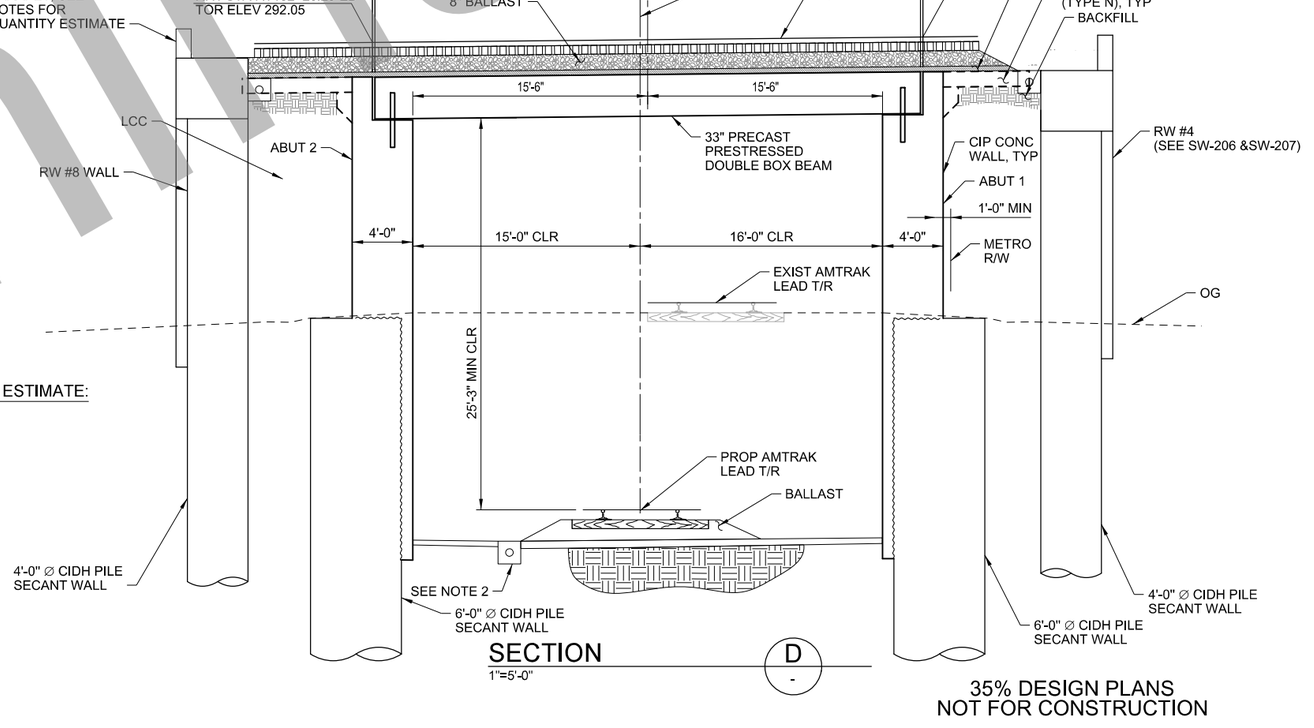

SECTION D

1"=5'-0"

NOTES:

1. SEE UTILITY PLANS FOR EXISTING UTILITIES.
2. SEE DRAINAGE PLAN FOR UNDERDRAIN LOCATIONS.
3. SEE TRACK PLANS FOR DETAILS OF PROPOSED TRACK CONSTRUCTION.

35% DESIGN PLANS
NOT FOR CONSTRUCTION

Preliminary

Original plan submittal made in Aug. 2019

THE PREPARATION OF THIS DRAWING HAS BEEN FINANCED IN PART THROUGH A GRANT FROM THE U.S. DEPARTMENT OF TRANSPORTATION, FEDERAL TRANSIT ADMINISTRATION (FTA), UNDER THE FEDERAL TRANSIT ACT OF 1964, AS AMENDED, AND IN PART BY THE TAXES OF THE CITIZENS OF LOS ANGELES COUNTY AND OF THE STATE OF CALIFORNIA.

Rev No.	Date	Description
1	3/21	Updated to show shorter Amtrak lead bridge
2	12/21	
3	6/22	

DESIGNED BY C. LI
DRAWN BY G. WEI
CHECKED BY P. ZHANG
IN CHARGE T. KIM
DATE 3/05/2021

REGISTERED PROFESSIONAL ENGINEER — No. Exp. CIVIL — STATE OF CALIFORNIA

Metro
LOS ANGELES COUNTY
METROPOLITAN TRANSPORTATION AUTHORITY

IDC CONSULTING ENGINEERS
300 S HARBOR BLVD.
SUITE 1000
ANAHEIM, CA 92805
(714) 520-0070

HDR ENGINEERING
350 S. GRAND AVENUE
SUITE 2600
LOS ANGELES, CA 90071
(213) 2394800

SUBMITTED: _____ PROJECT MANAGER

APPROVED: _____

LINK UNION STATION PROJECT

OFFSITE STRUCTURES
BRIDGE OVER AMTRAK LEAD
GENERAL PLAN 2 OF 3

CONTRACT NO
DRAWING NO SB-302 REV
SCALE AS NOTED
SHEET NO 44

Plot Driver=SCRIP-11X17bw_pdf.pltcfg Pentable=PlotStamp.tbl USER = Gary 8:44:41 AM 5/13/2020 c:\pwworking\sac\d1005113\LUS-SB302-AMT-GP02.dgn

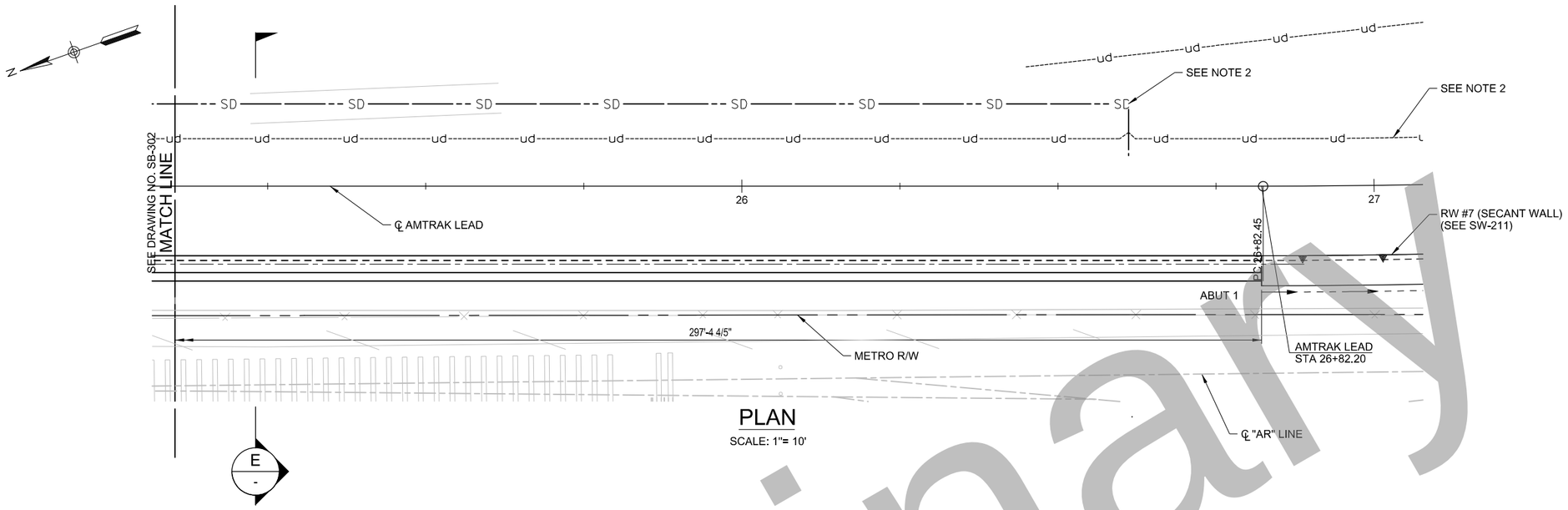

PLAN

SCALE: 1"= 10'

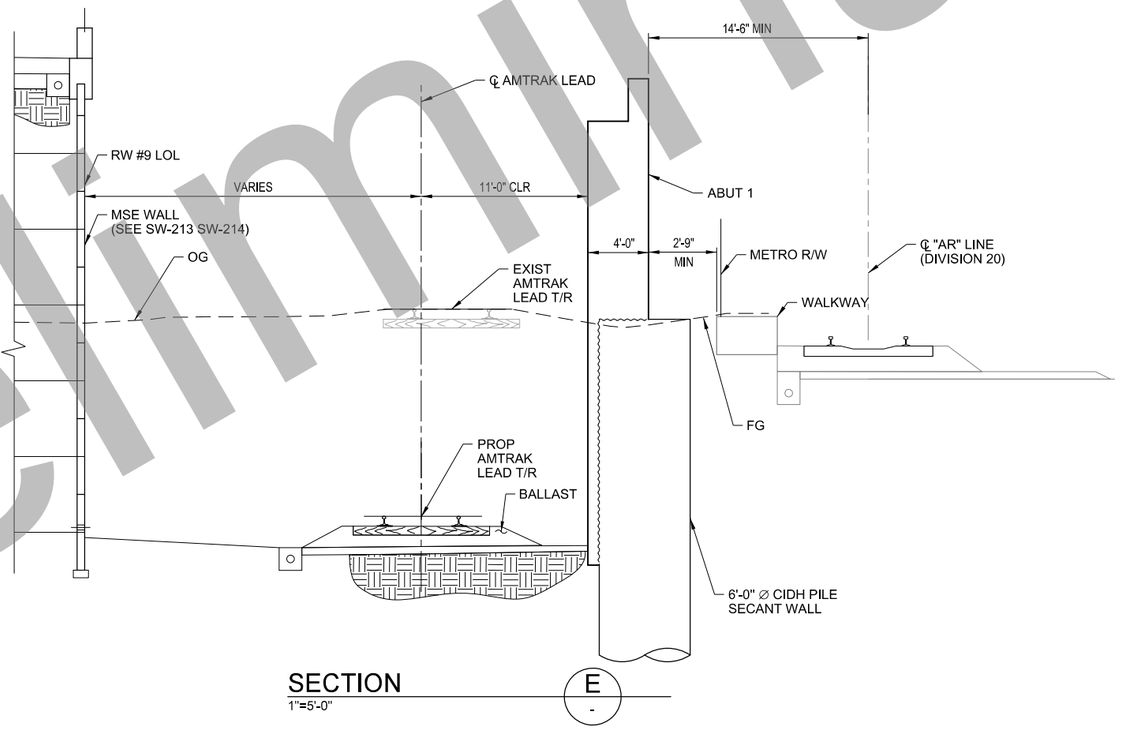

SECTION E

1"=5'-0"

NOTES:

1. SEE UTILITY PLANS FOR EXISTING UTILITIES.
2. SEE DRAINAGE PLAN FOR UNDERDRAIN LOCATIONS.
3. SEE TRACK PLANS FOR DETAILS OF PROPOSED TRACK CONSTRUCTION.

35% DESIGN PLANS
NOT FOR CONSTRUCTION

Preliminary

Original plan submittal made in Aug. 2019

THE PREPARATION OF THIS DRAWING HAS BEEN FINANCED IN PART THROUGH A GRANT FROM THE U.S. DEPARTMENT OF TRANSPORTATION, FEDERAL TRANSIT ADMINISTRATION (FTA), UNDER THE FEDERAL TRANSIT ACT OF 1964, AS AMENDED, AND IN PART BY THE TAXES OF THE CITIZENS OF LOS ANGELES COUNTY AND OF THE STATE OF CALIFORNIA.

Rev No.	Date	Description
1	3/21	Updated to show shorter Amtrak lead bridge
2	12/21	
3	6/22	

DESIGNED BY C. LI
DRAWN BY G. WEI
CHECKED BY P. ZHANG
IN CHARGE T. KIM
DATE 3/05/2021

REGISTERED PROFESSIONAL ENGINEER — No. Exp. CIVIL — STATE OF CALIFORNIA

Metro

LOS ANGELES COUNTY
METROPOLITAN TRANSPORTATION AUTHORITY

IDC CONSULTING ENGINEERS
300 S. HARBOR BLVD., SUITE 814
ANAHEIM, CA 92805
(714) 520-9370

HDR ENGINEERING
350 S. GRAND AVENUE
SUITE 2600
LOS ANGELES, CA 90071
(213) 2394800

SUBMITTED: _____ PROJECT MANAGER

APPROVED: _____

LINK UNION STATION PROJECT

OFFSITE STRUCTURES
BRIDGE OVER AMTRAK LEAD
GENERAL PLAN 3 OF 3

CONTRACT NO

DRAWING NO SB-303 REV

SCALE AS NOTED

SHEET NO 45

Plot Driver=SCRIP-11X17bw_pdf.pltcfg Pentable=PlotStamp.tbl USER = Gary 8:44:57 AM 5/13/2020 c:\pwworking\sac\d1005113\LUS-SB303-AMT-GP03.dgn

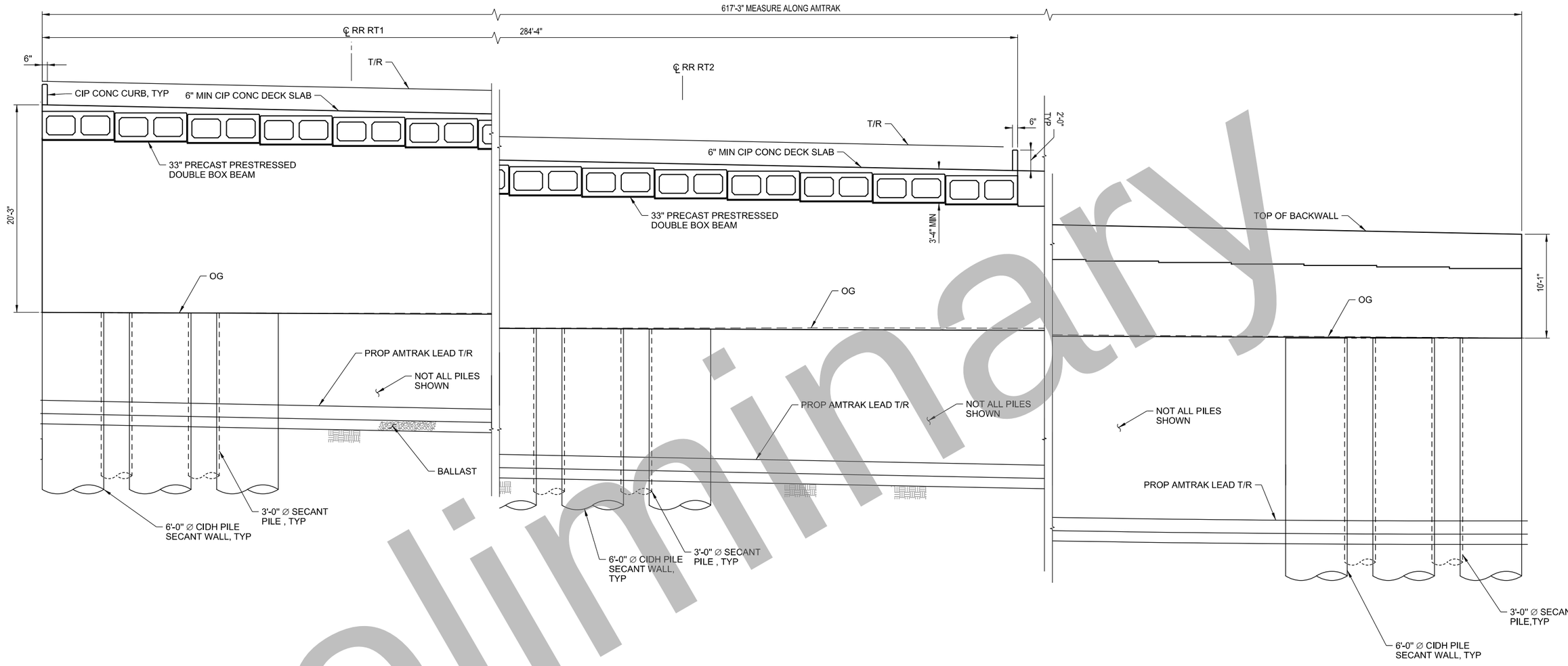

TYPICAL SECTION

SCALE: 1"= 5'

NOTES:

1. SEE TRACK PLANS FOR DETAILS OF PROPOSED TRACK CONSTRUCTION.

NOTES FOR QUANTITY ESTIMATE:

1. 6'-0" Ø CIDH PILE SHAFT SPACING = 8'-6" ,TYP
2. LENGTH OF CIDH PILE = 50'-0"
3. LENGTH OF SECANT PILE = 30'-0"

35% DESIGN PLANS
NOT FOR CONSTRUCTION

Preliminary

Original plan submittal made in Aug. 2019

THE PREPARATION OF THIS DRAWING HAS BEEN FINANCED IN PART THROUGH A GRANT FROM THE U.S. DEPARTMENT OF TRANSPORTATION, FEDERAL TRANSIT ADMINISTRATION (FTA), UNDER THE FEDERAL TRANSIT ACT OF 1964, AS AMENDED, AND IN PART BY THE TAXES OF THE CITIZENS OF LOS ANGELES COUNTY AND OF THE STATE OF CALIFORNIA.

Rev No.	Date	Description
1	3/21	Updated to show shorter Amtrak lead bridge
2	12/21	
3	6/22	

DESIGNED BY C. LI
DRAWN BY G. WEI
CHECKED BY P. ZHANG
IN CHARGE T. KIM
DATE 3/05/2021

REGISTERED PROFESSIONAL ENGINEER — No. ____ Exp. ____ CIVIL — STATE OF CALIFORNIA

Metro

LOS ANGELES COUNTY
METROPOLITAN TRANSPORTATION AUTHORITY

IDC CONSULTING ENGINEERS
300 S. HARBOR BLVD., SUITE 914
ANAHEIM, CA 92805
(714) 520-9370

HDR ENGINEERING
350 S. GRAND AVENUE
SUITE 2600
LOS ANGELES, CA 90071
(213) 2394800

SUBMITTED: _____ PROJECT MANAGER

APPROVED: _____

LINK UNION STATION PROJECT

OFFSITE STRUCTURES
BRIDGE OVER AMTRAK LEAD
TYPICAL SECTION

CONTRACT NO
DRAWING NO SB-304
REV
SCALE NO SCALE
SHEET NO 46

Plot Driver=SCRIP-11X17bw_pdf.pltcfg Pentable=PlotStamp.tbl USER = Gary 8:45:12 AM 5/13/2020 c:\pwworking\sac\d1005113\LUS~SB304~AMT~TS.dgn

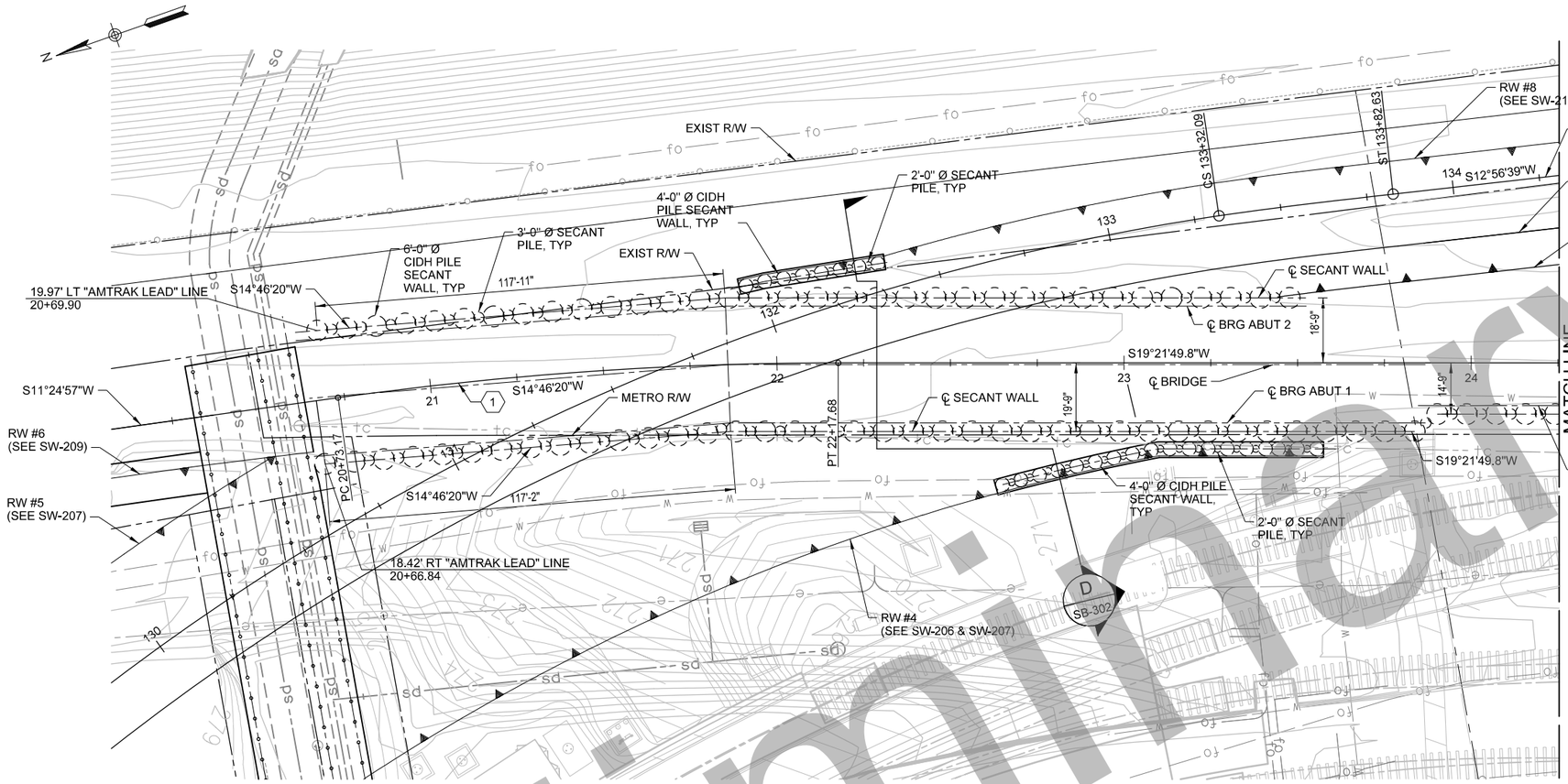

PLAN

SCALE: 1"= 20'

CURVE DATA				
NO.	RADIUS	△	LENGTH	TANGENT
1	1042.14'	7°56'52.8"	144.56'	72.40'

LEGEND:

- DENOTES CIDH PILE
- DENOTES MICROPILE

NOTES:

1. SEE UTILITY PLANS FOR EXISTING UTILITIES.
2. SEE DRAINAGE PLANS FOR UNDERDRAIN LOCATIONS.
3. SEE TRACK PLANS FOR DETAILS OF PROPOSED TRACK CONSTRUCTION.

NOTES FOR QUANTITY ESTIMATE:

1. 4'-0" Ø CIDH PILE SPACING OF RW #8 = 5'-6",TYP
2. LENGTH OF 4'-0" Ø CIDH PILE OF RW #8 = 95'-0"
3. LENGTH OF 2'-0" Ø SECANT PILE OF RW #8 = 30'-0"
4. 4'-0" Ø CIDH PILE SPACING OF RW #4= 5'-6", TYP
5. LENGTH OF 4'-0" Ø CIDH PILE OF RW #4 = 60'-0"
6. LENGTH OF 2'-0" Ø SECANT PILE OF RW #4 = 30'-0"

Preliminary

35% DESIGN PLANS
NOT FOR CONSTRUCTION

Original plan submittal made in Aug. 2019

THE PREPARATION OF THIS DRAWING HAS BEEN FINANCED IN PART THROUGH A GRANT FROM THE U.S. DEPARTMENT OF TRANSPORTATION, FEDERAL TRANSIT ADMINISTRATION (FTA), UNDER THE FEDERAL TRANSIT ACT OF 1964, AS AMENDED, AND IN PART BY THE TAXES OF THE CITIZENS OF LOS ANGELES COUNTY AND OF THE STATE OF CALIFORNIA.

Rev No.	Date	Description
1	3/21	Updated to show shorter Amtrak lead bridge
2	12/21	
3	6/22	

DESIGNED BY C. LI
DRAWN BY G. WEI
CHECKED BY P. ZHANG
IN CHARGE T. KIM
DATE 3/05/2021

REGISTERED PROFESSIONAL ENGINEER — No. ____ Exp. ____ CIVIL — STATE OF CALIFORNIA

Metro
LOS ANGELES COUNTY
METROPOLITAN TRANSPORTATION AUTHORITY

IDC CONSULTING ENGINEERS
300 S HARBOR BLVD.
SUITE 710
ANAHEIM, CA 92805
(714) 520-9070

HDR ENGINEERING
350 S. GRAND AVENUE
SUITE 2550
LOS ANGELES, CA 90071
(213) 236-0800

SUBMITTED: _____ PROJECT MANAGER

APPROVED: _____

LINK UNION STATION PROJECT

OFFSITE STRUCTURES
BRIDGE OVER AMTRAK LEAD FOUNDATION PLAN 1 OF 2

CONTRACT NO
DRAWING NO SB-305
REV
SCALE 1"=20'
SHEET NO 47

Plot Driver=SCRIP-11X17bw_pdf.pltcfg Pentable=PlotStamp.tbl USER = Gary 8:45:28 AM 5/13/2020 c:\pwworking\.sac\d1005113\LUS-SB305-AMT-FDN01.dgn

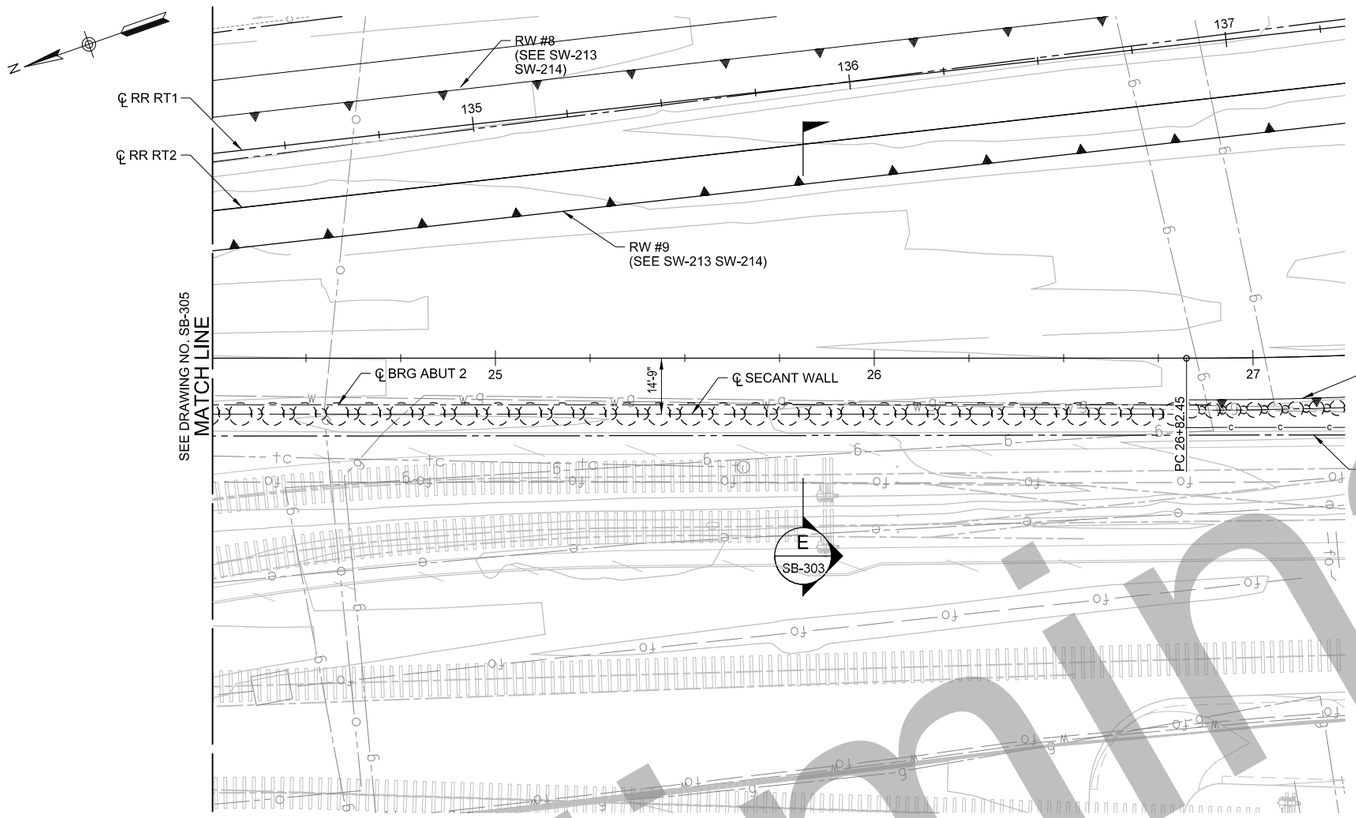

PLAN

SCALE: 1"= 20'

LEGEND:

DENOTES CIDH PILE

NOTES:

1. SEE UTILITY PLANS FOR EXISTING UTILITIES.
2. SEE DRAINAGE PLAN FOR UNDERDRAIN LOCATIONS.
3. SEE TRACK PLANS FOR DETAILS OF PROPOSED TRACK CONSTRUCTION.

Preliminary

35% DESIGN PLANS
NOT FOR CONSTRUCTION

Original plan submittal made in Aug. 2019

Rev No.	Date	Description
1	3/21	Updated to show shorter Amtrak lead bridge
2	12/21	
3	6/22	

THE PREPARATION OF THIS DRAWING HAS BEEN FINANCED IN PART THROUGH A GRANT FROM THE U.S. DEPARTMENT OF TRANSPORTATION, FEDERAL TRANSIT ADMINISTRATION (FTA), UNDER THE FEDERAL TRANSIT ACT OF 1964, AS AMENDED, AND IN PART BY THE TAXES OF THE CITIZENS OF LOS ANGELES COUNTY AND OF THE STATE OF CALIFORNIA.

DESIGNED BY: C. LI
DRAWN BY: G. WEI
CHECKED BY: P. ZHANG
IN CHARGE: T. KIM
DATE: 3/05/2021

REGISTERED PROFESSIONAL ENGINEER — No. — Exp. — CIVIL — STATE OF CALIFORNIA

Metro
LOS ANGELES COUNTY
METROPOLITAN TRANSPORTATION AUTHORITY
IDC CONSULTING ENGINEERS
300 S. HARBOR BLVD.
SUITE 710
ANAHEIM, CA 92805
(714) 520-9270
HDR ENGINEERING
350 S. GRAND AVENUE
SUITE 2500
LOS ANGELES, CA 90071
(213) 239-0800

SUBMITTED: _____ PROJECT MANAGER

APPROVED: _____

LINK UNION STATION PROJECT

OFFSITE STRUCTURES
BRIDGE OVER AMTRAK LEAD FOUNDATION PLAN 2 OF 2

CONTRACT NO

DRAWING NO: SB-306 | REV

SCALE: 1"=20'-0"

SHEET NO: 48

Plot Driver=SCRIP-11X17bw_pdf.pltcfg Pentable=PlotStamp.tbl USER = Gary 8:45:43 AM 5/13/2020 c:\pwworking\sac\d1005113\LUS-SB306-AMT-FDN02.dgn

NOTES:

1. SEE UTILITY PLANS FOR EXISTING UTILITIES.
2. SEE DRAINAGE PLANS FOR UNDERDRAIN LOCATIONS.
3. SEE TRACK PLANS FOR DETAILS OF PROPOSED TRACK CONSTRUCTION.
4. CONTRACTOR TO PROVIDE ANY SHORING AND EXCAVATION DESIGN REQUIRED IN ORDER TO EXCAVATE AND CONSTRUCT THE PROTECTION SLAB

NOTES FOR QUANTITY ESTIMATE:

1. TYPICAL SECTION DIMENSIONS SHOWN ARE FOR QUANTITY ESTIMATION PURPOSE ONLY.
2. LENGTH OF MICROPILE = 30'-0"

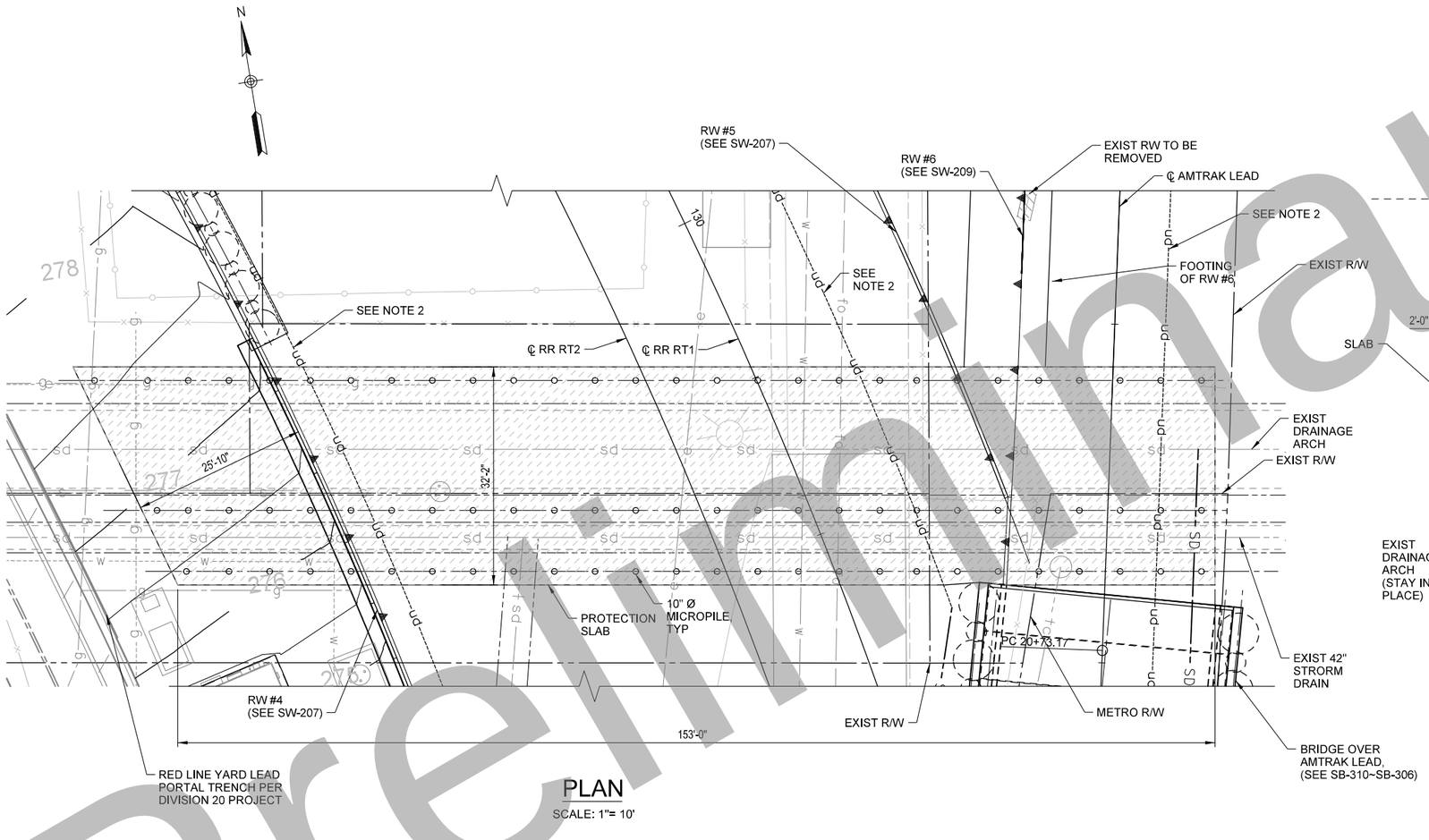

PLAN

SCALE: 1"= 10'

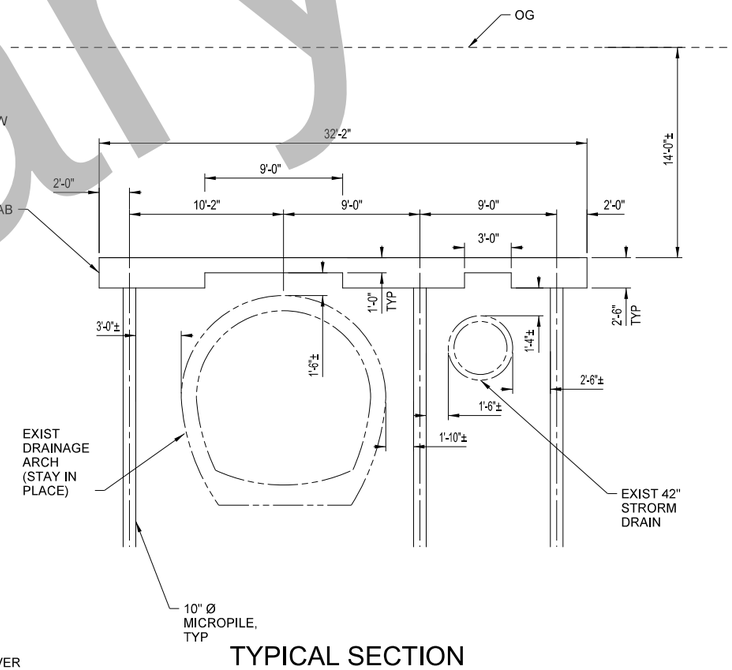

TYPICAL SECTION

NO SCALE

Preliminary

35% DESIGN PLANS
NOT FOR CONSTRUCTION

Original plan submittal made in Aug. 2019

THE PREPARATION OF THIS DRAWING HAS BEEN FINANCED IN PART THROUGH A GRANT FROM THE U.S. DEPARTMENT OF TRANSPORTATION, FEDERAL TRANSIT ADMINISTRATION (FTA), UNDER THE FEDERAL TRANSIT ACT OF 1964, AS AMENDED, AND IN PART BY THE TAXES OF THE CITIZENS OF LOS ANGELES COUNTY AND OF THE STATE OF CALIFORNIA.

Rev No.	Date	Description
1	3/21	
2	12/21	
3	6/22	

DESIGNED BY
DRAWN BY G. WEI
CHECKED BY
IN CHARGE T. KIM
DATE 8/01/2019

REGISTERED PROFESSIONAL ENGINEER — No. Exp. CIVIL — STATE OF CALIFORNIA

Metro

LOS ANGELES COUNTY
METROPOLITAN TRANSPORTATION AUTHORITY

IDC CONSULTING ENGINEERS
300 S. HARBOR BLVD.
SUITE 710
ANAHEIM, CA 92805
(714) 520-9070

HDR ENGINEERING
350 S. GRAND AVENUE
SUITE 2500
LOS ANGELES, CA 90071
(213) 239-5800

SUBMITTED: _____ PROJECT MANAGER

APPROVED: _____

LINK UNION STATION PROJECT

OFFSITE STRUCTURES
DUCOMMUN ST STORM DRAIN PROTECTION SLAB GENERAL PLAN

CONTRACT NO

DRAWING NO SB-101 | REV

SCALE AS NOTED

SHEET NO 49

Plot Driver=SCRIP-11X17bw_pdf.pltcfg Pentable=PlotStamp.tbl USER = Gary 8:46:06 AM 5/13/2020 c:\pwworking\sac\d1005114\LUS-SB101-SDP-GP.dgn

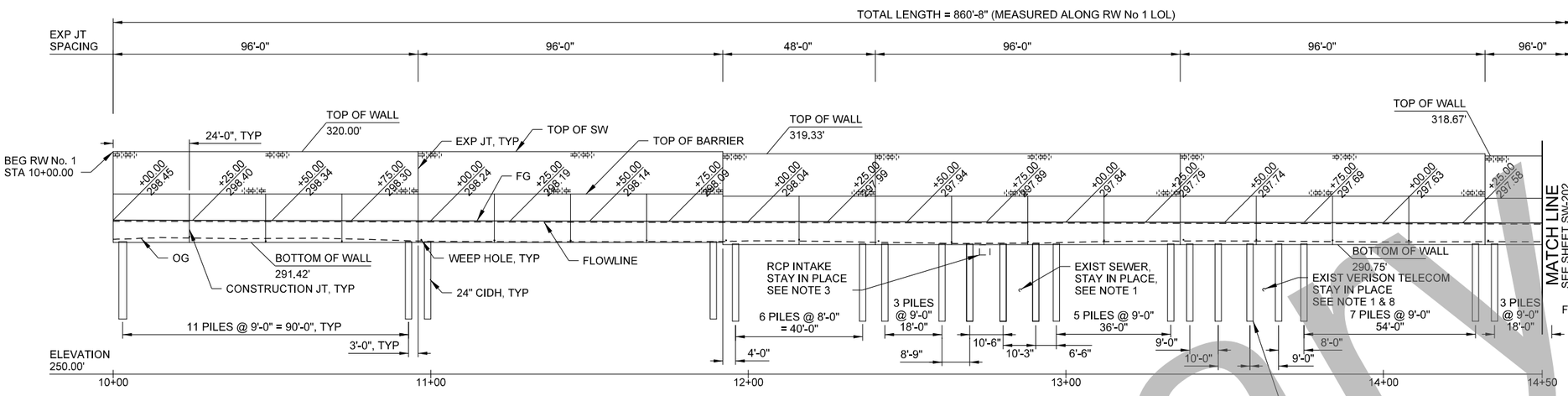

DEVELOPED ELEVATION

SCALE: 1"=20'

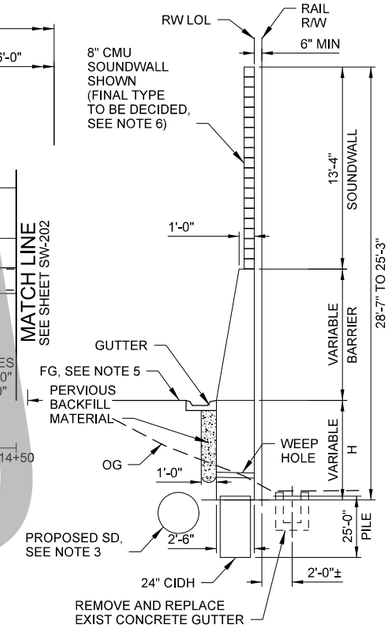

TYPICAL SECTION

NO SCALE

CURVE DATA				
NO.	RADIUS	△	LENGTH	TANGENT
1	566.00'	10°07'23"	357.33'	184.85'

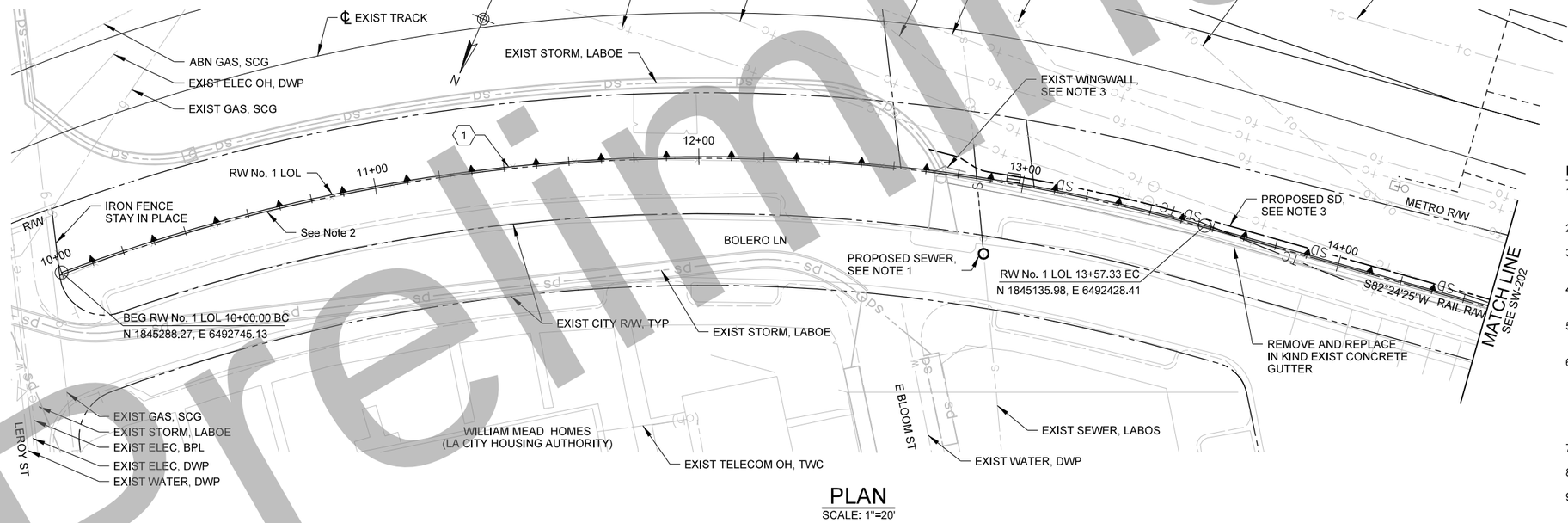

PLAN

SCALE: 1"=20'

NOTES:

1. SEE UTILITY PLANS FOR EXISTING AND PROPOSED UTILITIES.
2. REMOVE EXISTING WROUGHT IRON FENCE
3. SEE DRAINAGE PLANS FOR PROPOSED, STAY IN PLACE, AND REMOVALS OF DRAINAGE FACILITIES
4. WALL DESIGNED TO ACCOMMODATE FUTURE SIXTH LEAD TRACK WITH 650' MINIMUM RADIUS
5. SEE TRACK SECTION FOR MAINTENANCE ROAD FINISHED GRADE.
6. SYNTHETIC IVY (IVY IT INC, OR APPROVED EQUAL) TO BE INSTALLED ALONG THE FULL LENGTH OF THE WALL FACING THE WILLIAM MEAD HOMES (WMH) PROPERTY. DETAILS REGARDING THE PLACEMENT OF IVY TO BE DEVELOPED DURING FINAL DESIGN IN COORDINATION WITH WILLIAM MEAD HOMES RESIDENTS AND METRO.
7. SEE SHEET SW-203 FOR CIDH AND WALL DETAILS.
8. CONTRACTOR SHALL FIELD VERIFY TELECOM LINE
9. PILE MAY BE SHIFTED OFF CENTERLINE TO MAXIMUM PILE SPACING ON SHEET SW-203 TO CLEAR UTILITY.

35% DESIGN PLAN
NOT FOR CONSTRUCTION

Preliminary

Original plan submittal made in Aug. 2019

THE PREPARATION OF THIS DRAWING HAS BEEN FINANCED IN PART THROUGH A GRANT FROM THE U.S. DEPARTMENT OF TRANSPORTATION, FEDERAL TRANSIT ADMINISTRATION (FTA), UNDER THE FEDERAL TRANSIT ACT OF 1964, AS AMENDED, AND IN PART BY THE TAXES OF THE CITIZENS OF LOS ANGELES COUNTY AND OF THE STATE OF CALIFORNIA.

Rev No.	Date	Description
1	3/21	
2	12/21	
3	6/22	

DESIGNED BY D. ACEVES
DRAWN BY D. ACEVES
CHECKED BY G. GUEVARA
IN CHARGE T. KIM
DATE 8/01/2019

REGISTERED PROFESSIONAL ENGINEER — No. Exp. CIVIL — STATE OF CALIFORNIA

Metro
LOS ANGELES COUNTY METROPOLITAN TRANSPORTATION AUTHORITY
PacRim Engineering
312 EAST 1ST ST, SUITE 220
LOS ANGELES, CA 90012
(323) 763-8700
HDR
350 S. GRAND AVE, SUITE 2900
LOS ANGELES, CA 90071
(213) 239-5800

SUBMITTED: _____ PROJECT MANAGER
APPROVED: _____

LINK UNION STATION PROJECT

OFF-SITE STRUCTURES
WILLIAM MEAD HOMES
RETAINING WALL
GENERAL PLAN No. 1

CONTRACT NO
DRAWING NO SW-201
REV
SCALE AS SHOWN
SHEET NO 50

$FILE$ 5/12/2020 11:36:57 AM USER = dceves Pentable=PlotStamp.tbl Plot Driver=$PLTDRV$

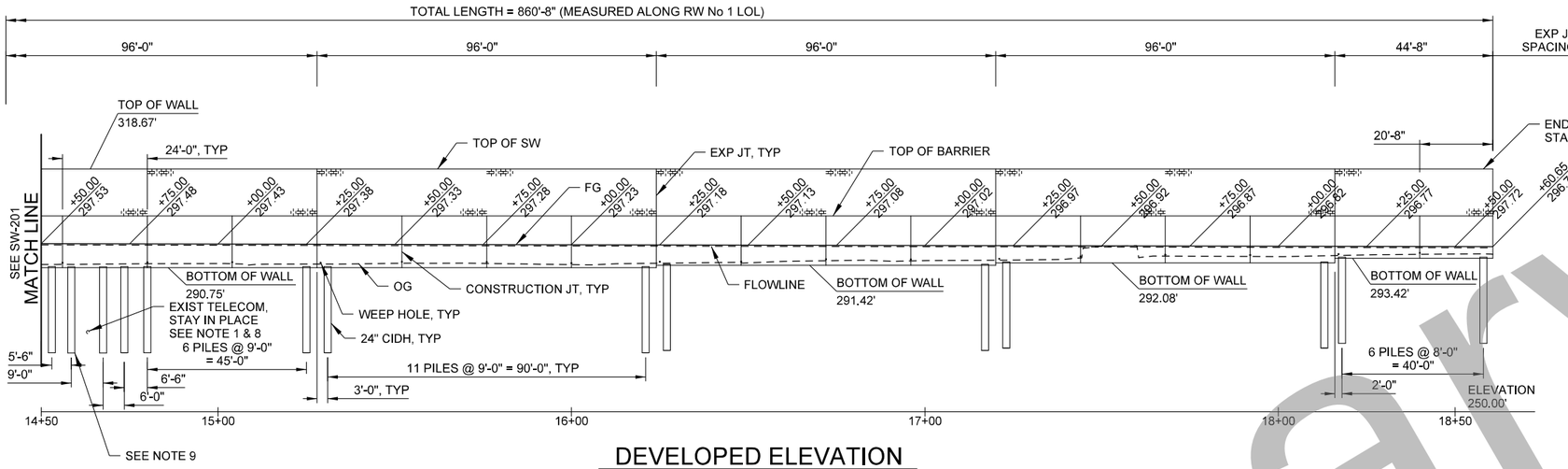

DEVELOPED ELEVATION

SCALE: 1"=20'

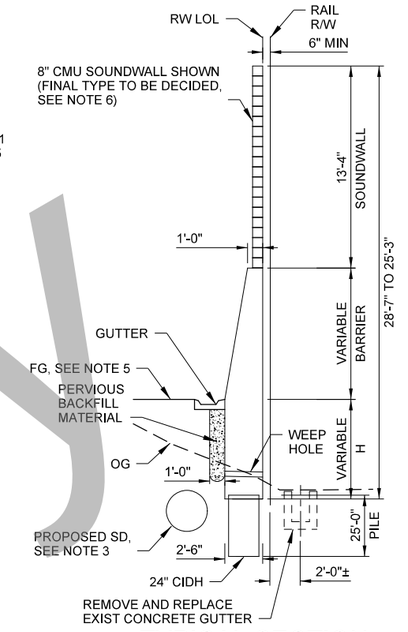

TYPICAL SECTION

SCALE: 1"=20'

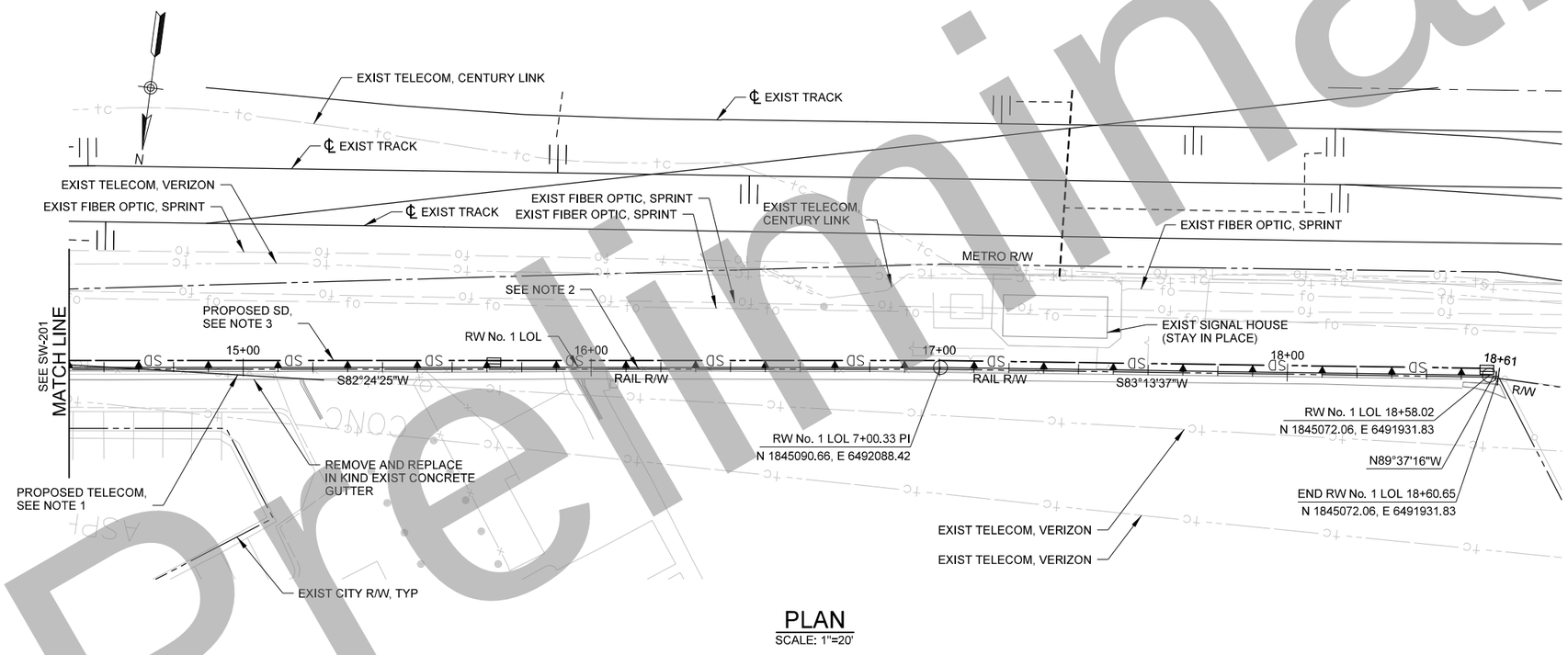

PLAN

SCALE: 1"=20'

NOTES:

1. SEE UTILITY PLANS FOR EXISTING AND PROPOSED UTILITIES.
2. REMOVE EXISTING WROUGHT IRON FENCE
3. SEE DRAINAGE PLANS FOR PROPOSED, STAY IN PLACE, AND REMOVALS OF DRAINAGE FACILITIES
4. WALL DESIGNED TO ACCOMMODATE FUTURE SIXTH LEAD TRACK WITH 650' MINIMUM RADIUS
5. SEE TRACK SECTION FOR MAINTENANCE ROAD FINISHED GRADE.
6. SYNTHETIC IVY (IVY IT INC. OR APPROVED EQUAL) TO BE INSTALLED ALONG THE FULL LENGTH OF THE WALL FACING THE WILLIAM MEAD HOMES (WMH) PROPERTY. DETAILS REGARDING THE PLACEMENT OF IVY TO BE DEVELOPED DURING FINAL DESIGN IN COORDINATION WITH WILLIAM MEAD HOMES RESIDENTS AND METRO.
7. SEE SHEET SW-203 FOR CIDH AND WALL DETAILS.
8. CONTRACTOR SHALL FIELD VERIFY TELECOM LINE
9. PILE MAY BE SHIFTED OFF CENTERLINE TO MAXIMUM PILE SPACING ON SHEET SW-203 TO CLEAR UTILITY.

35% DESIGN PLAN
NOT FOR CONSTRUCTION

Preliminary

Original plan submittal made in Aug. 2019

THE PREPARATION OF THIS DRAWING HAS BEEN FINANCED IN PART THROUGH A GRANT FROM THE U.S. DEPARTMENT OF TRANSPORTATION, FEDERAL TRANSIT ADMINISTRATION (FTA), UNDER THE FEDERAL TRANSIT ACT OF 1964, AS AMENDED, AND IN PART BY THE TAXES OF THE CITIZENS OF LOS ANGELES COUNTY AND OF THE STATE OF CALIFORNIA.

Rev No.	Date	Description
1	3/21	
2	12/21	
3	6/22	

DESIGNED BY D. ACEVES
DRAWN BY D. ACEVES
CHECKED BY G. GUEVARA
IN CHARGE T. KIM
DATE 8/01/2019

REGISTERED PROFESSIONAL ENGINEER — No. ____ Exp. ____ CIVIL — STATE OF CALIFORNIA

Metro
LOS ANGELES COUNTY
METROPOLITAN TRANSPORTATION AUTHORITY
PacRim Engineering
312 EAST 1ST ST, SUITE 220
LOS ANGELES, CA 90012
(323) 783-8700
HDR
350 S. GRAND AVE, SUITE 2900
LOS ANGELES, CA 90071
(213) 239-5800

SUBMITTED: _____ PROJECT MANAGER
APPROVED: _____

LINK UNION STATION PROJECT

OFF-SITE STRUCTURES
WILLIAM MEAD HOMES
RETAINING WALL
GENERAL PLAN No. 2

CONTRACT NO
DRAWING NO SW-202
REV
SCALE AS SHOWN
SHEET NO 51

Plot Driver=$PLTDRV$$ Pentable=PlotStamp.tbl USER = dceves 11:30:41 AM 5/12/2020 $FILE$

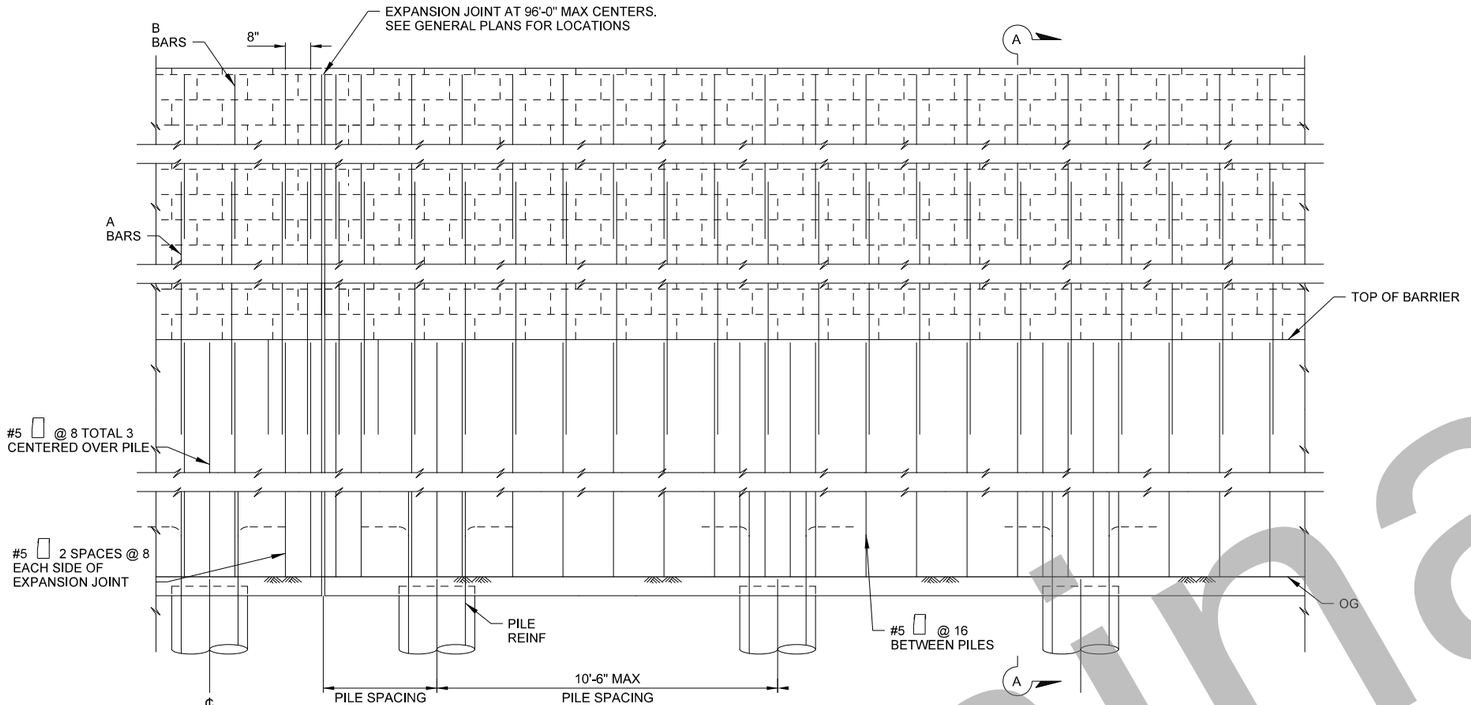

ELEVATION

SCALE: 1/2"=1'-0"

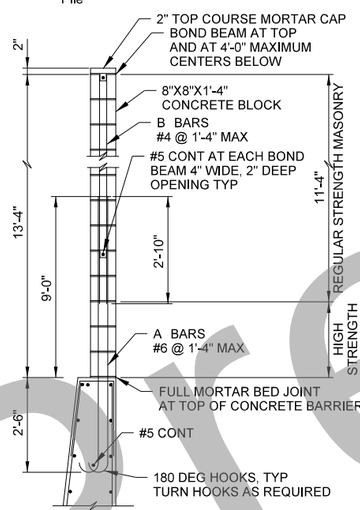

SOUND WALL

SCALE: NONE

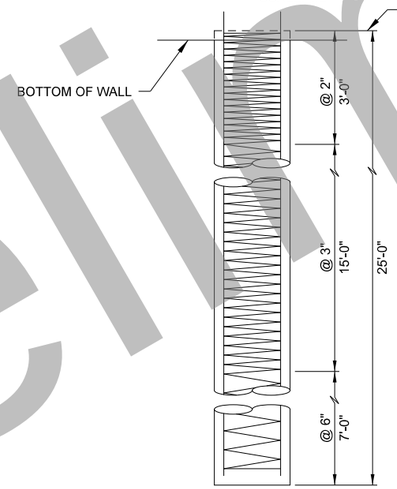

PILE ELEVATION

SCALE: NONE

DESIGN NOTES:

DESIGN

AASHTO BDS 2012 LRFD 6TH EDITION

DESIGN WIND LOAD

27 psf

REINFORCED CONCRETE

f'c = 4 ksi
fy = 60 ksi

DESIGN SEISMIC LOAD

0.63 DEAD LOAD

CONCRETE MASONRY

REGULAR STRENGTH			HIGH STRENGTH		
f'm	=	1500 psi	f'm	=	2500 psi
fb	=	495 psi	fb	=	830 psi
fs	=	24,000 psi	fs	=	24,000 psi
n	=	25.8	n	=	15.5

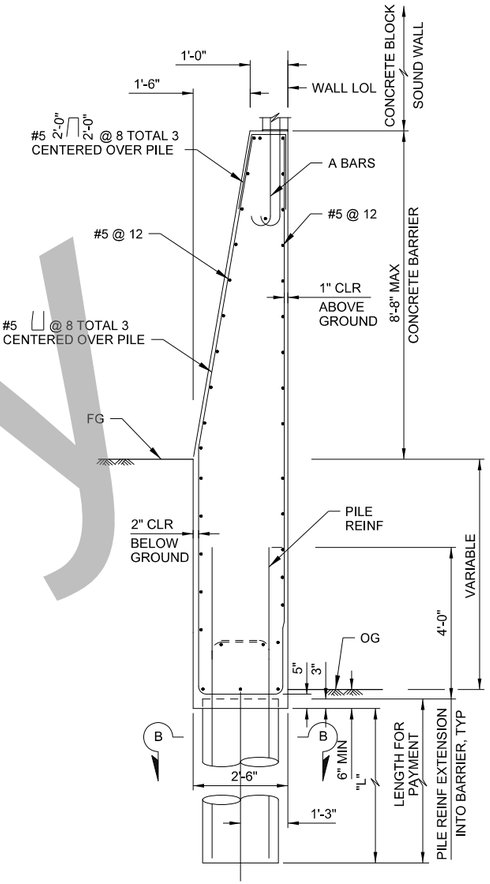

SECTION A-A

SCALE: 1/2"=1'-0"

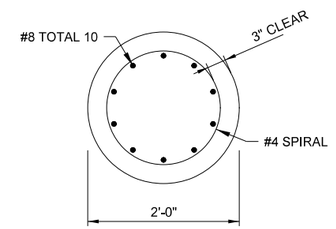

SECTION B-B

SCALE: 1"=1'-0"

35% DESIGN PLAN
NOT FOR CONSTRUCTION

Preliminary

Original plan submittal made in Aug. 2019

THE PREPARATION OF THIS DRAWING HAS BEEN FINANCED IN PART THROUGH A GRANT FROM THE U.S. DEPARTMENT OF TRANSPORTATION, FEDERAL TRANSIT ADMINISTRATION (FTA), UNDER THE FEDERAL TRANSIT ACT OF 1964, AS AMENDED, AND IN PART BY THE TAXES OF THE CITIZENS OF LOS ANGELES COUNTY AND OF THE STATE OF CALIFORNIA.

Rev No.	Date	Description
1	3/21	
2	12/21	
3	6/22	

DESIGNED BY D. ACEVES
DRAWN BY D. ACEVES
CHECKED BY G. GUEVARA
IN CHARGE T. KIM
DATE 8/01/2019

REGISTERED PROFESSIONAL ENGINEER — No. — Exp. — CIVIL — STATE OF CALIFORNIA

Metro
LOS ANGELES COUNTY METROPOLITAN TRANSPORTATION AUTHORITY
PacRim Engineering
312 EAST 1ST ST, SUITE 220
LOS ANGELES, CA 90012
(323) 763-8700
HDR
350 S. GRAND AVE, SUITE 2900
LOS ANGELES, CA 90071
(213) 239-5800

SUBMITTED: _____ PROJECT MANAGER

APPROVED: _____

LINK UNION STATION PROJECT

OFF-SITE STRUCTURES
WILLIAM MEAD HOMES
RETAINING WALL
TYPICAL SECTION

CONTRACT NO

DRAWING NO SW-203 | REV

SCALE AS SHOWN

SHEET NO 52

Plot Driver=$PLTDRV$ Pentable=PlotStamp.tbl USER = daceves 11:46:05 AM 5/12/2020 $FILE$

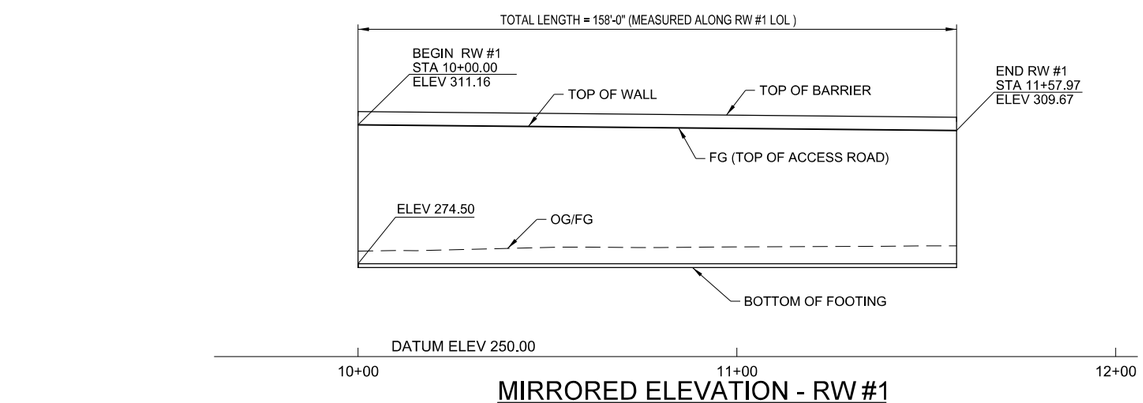

MIRRORED ELEVATION - RW #1

SCALE: 1"=20'

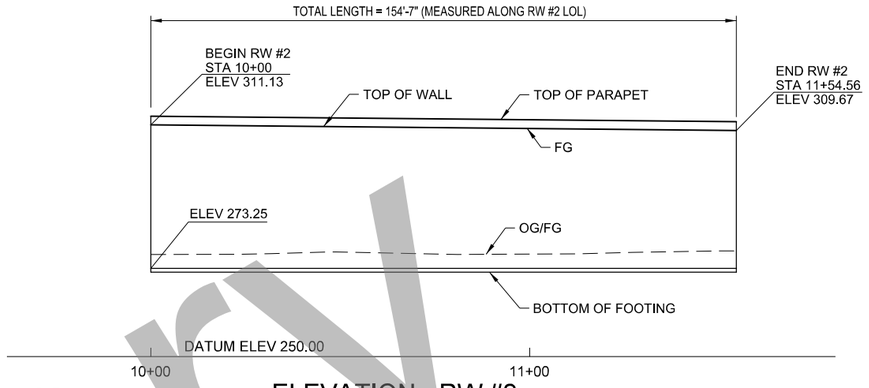

ELEVATION - RW #2

SCALE: 1"=20'

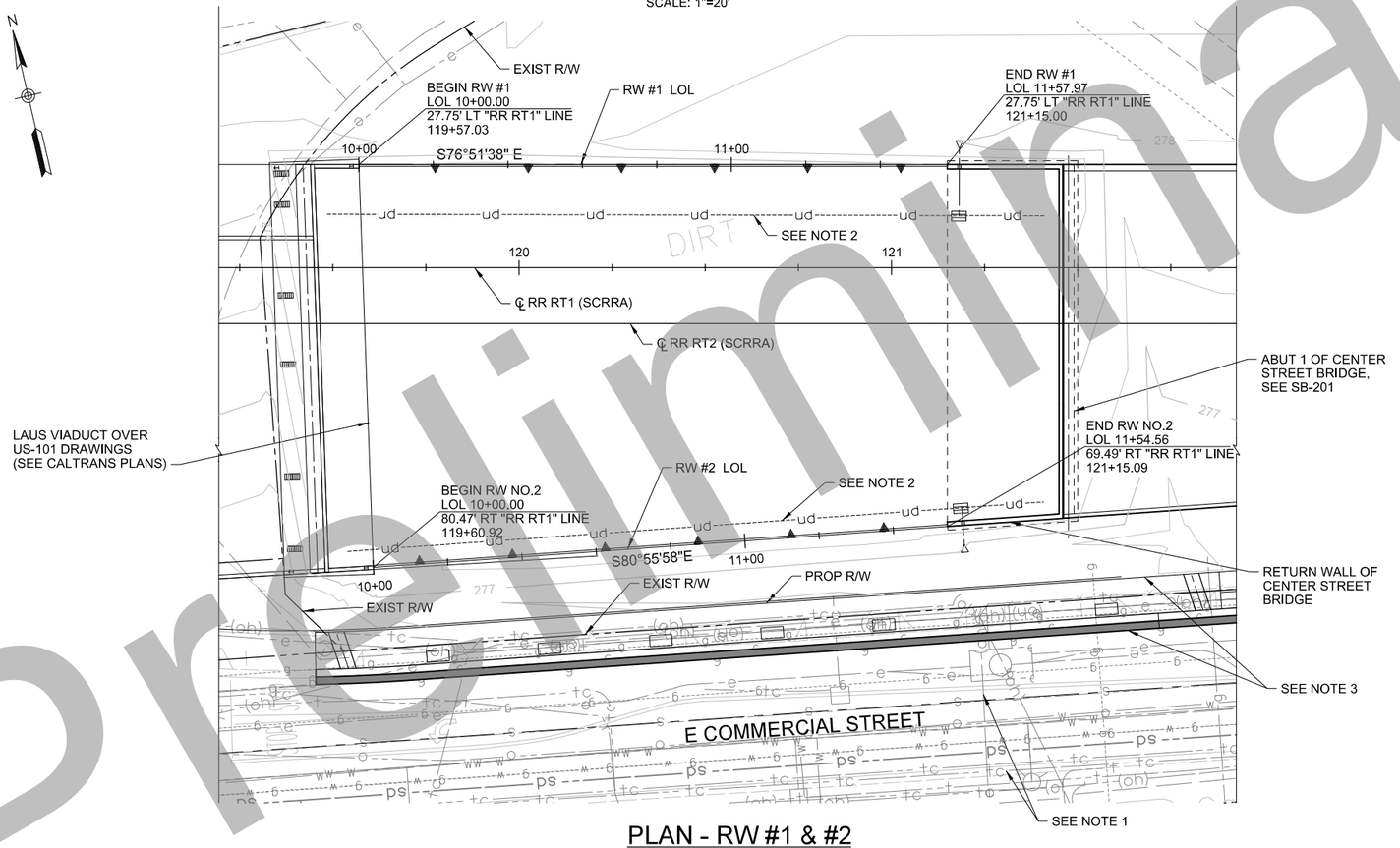

PLAN - RW #1 & #2

SCALE: 1"=20'

NOTES:

1. SEE UTILITY PLANS FOR EXISTING UTILITIES.
2. SEE DRAINAGE PLANS FOR UNDERDRAIN LOCATIONS.
3. SEE ROADWAY PLANS FOR ROADWAY IMPROVEMENTS.
4. SEE SW-205 FOR TYPICAL SECTION.
5. SEE TRACK PLANS FOR DETAILS OF PROPOSED TRACK CONSTRUCTION.

35% DESIGN PLANS
NOT FOR CONSTRUCTION

Preliminary

Original plan submittal made in Aug. 2019

THE PREPARATION OF THIS DRAWING HAS BEEN FINANCED IN PART THROUGH A GRANT FROM THE U.S. DEPARTMENT OF TRANSPORTATION, FEDERAL TRANSIT ADMINISTRATION (FTA), UNDER THE FEDERAL TRANSIT ACT OF 1964, AS AMENDED, AND IN PART BY THE TAXES OF THE CITIZENS OF LOS ANGELES COUNTY AND OF THE STATE OF CALIFORNIA.

Rev No.	Date	Description
1	3/21	
2	12/21	
3	6/22	

DESIGNED BY L. LIU
DRAWN BY G. WEI
CHECKED BY P. ZHANG
IN CHARGE T. KIM
DATE 8/01/2019

REGISTERED PROFESSIONAL ENGINEER — No. Exp. CIVIL — STATE OF CALIFORNIA

Metro
LOS ANGELES COUNTY METROPOLITAN TRANSPORTATION AUTHORITY
IDC CONSULTING ENGINEERS 300 S. HARBOR BLVD., SUITE 710 ANAHEIM, CA 92805 (714) 520-9070
HDR ENGINEERING 350 S. GRAND AVENUE SUITE 2550 LOS ANGELES, CA 90071 (213) 2354800

SUBMITTED: _____ PROJECT MANAGER

APPROVED: _____

LINK UNION STATION PROJECT

OFFSITE STRUCTURES
RW #1 & #2
PLAN LAYOUT

CONTRACT NO
DRAWING NO SW-204
REV
SCALE 1" = 20'
SHEET NO 53

Plot Driver=SCRIP-11X17bw_pdf.pltcfg Pentable=PlotStamp.tbl USER = Gary 8:46:27 AM 5/13/2020 c:\pwworking\sac\d1005007\LUS-SW204-PL.dgn

NOTES FOR QUANTITY ESTIMATE:

1. AVERAGE THICKNESS OF MOMENT SLAB = 1'-3"
2. DIMENSION OF MOMENT SLAB IS FOR QUANTITY ESTIMATE ONLY

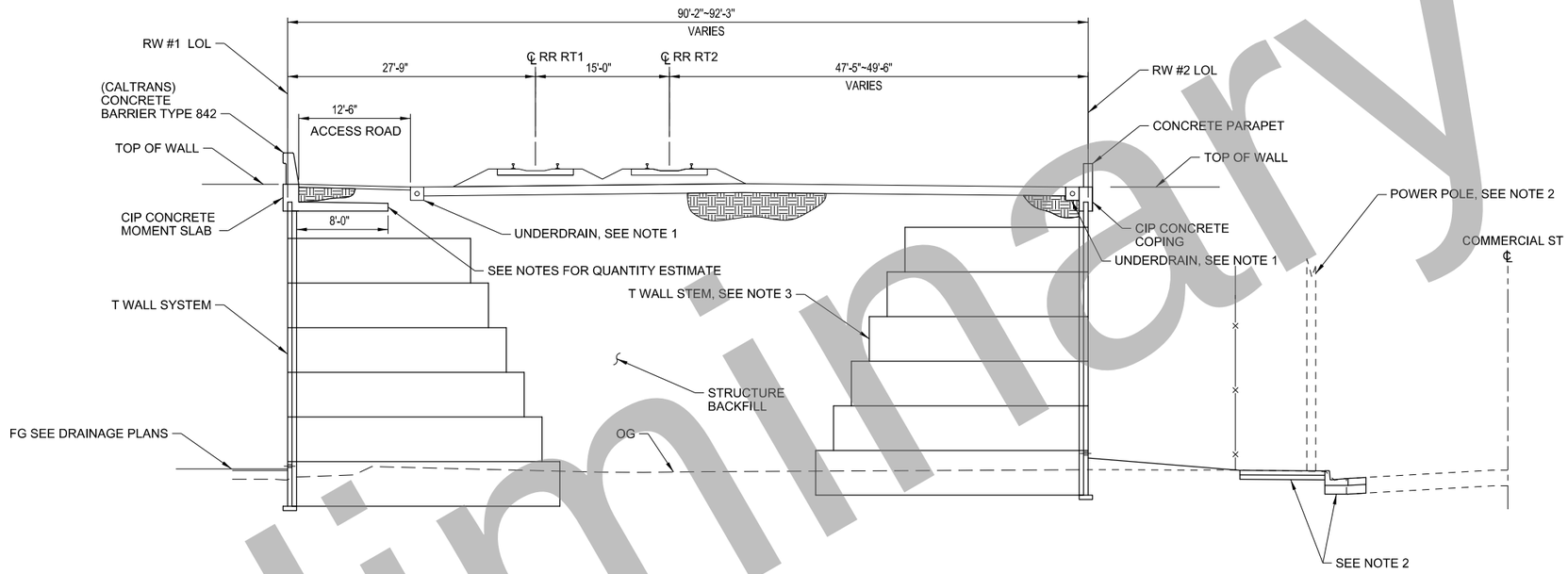

TYPICAL SECTION - RW #1 & RW#2

SCALE: NO SCALE

NOTES:

1. SEE DRAINAGE PLANS FOR UNDERDRAIN DETAILS.
2. SEE ROADWAY PLANS FOR ROADWAY IMPROVEMENTS.
3. T WALL SYSTEM SHOWN AS PROPOSED RW TYPE. T WALL DETAILS, INCLUDING STEM WALL LENGTH AND HEIGHT, WILL BE DESIGNED BY T WALL SUPPLIER.
4. RW TYPE TO BE FINALIZED DURING THE NEXT DESIGN PHASE, AFTER THE COMPLETION OF SOIL BORINGS AND GEOTECHNICAL REPORT.
5. SEE TRACK PLANS FOR DETAILS OF PROPOSED TRACK CONSTRUCTION.

Preliminary

35% DESIGN PLANS
NOT FOR CONSTRUCTION

Original plan submittal made in Aug. 2019

THE PREPARATION OF THIS DRAWING HAS BEEN FINANCED IN PART THROUGH A GRANT FROM THE U.S. DEPARTMENT OF TRANSPORTATION, FEDERAL TRANSIT ADMINISTRATION (FTA), UNDER THE FEDERAL TRANSIT ACT OF 1964, AS AMENDED, AND IN PART BY THE TAXES OF THE CITIZENS OF LOS ANGELES COUNTY AND OF THE STATE OF CALIFORNIA.

Rev No.	Date	Description
1	3/21	
2	12/21	
3	6/22	

DESIGNED BY L. LIU
DRAWN BY G. WEI
CHECKED BY P. ZHANG
IN CHARGE T. KIM
DATE 8/01/2019

REGISTERED PROFESSIONAL ENGINEER No. Exp. CIVIL STATE OF CALIFORNIA

Metro
LOS ANGELES COUNTY METROPOLITAN TRANSPORTATION AUTHORITY

IDC CONSULTING ENGINEERS
300 S HARBOR BLVD. SUITE 710 ANAHEIM, CA 92805 (714) 520-9070

HDR ENGINEERING
350 S. GRAND AVENUE SUITE 2500 LOS ANGELES, CA 90071 (213) 239-5800

SUBMITTED: _____ PROJECT MANAGER
APPROVED: _____

LINK UNION STATION PROJECT
OFFSITE STRUCTURES
RW #1 & #2
TYPICAL SECTION

CONTRACT NO
DRAWING NO SW-205
REV
SCALE NO SCALE
SHEET NO 54

Plot Driver=SCRIP-11X17bw_pdf.pltcfg Pentable=PlotStamp.tbl USER = Gary 8:46:45 AM 5/13/2020 c:\pwworking\sac\d1005007\LUS-SW205-TS.dgn

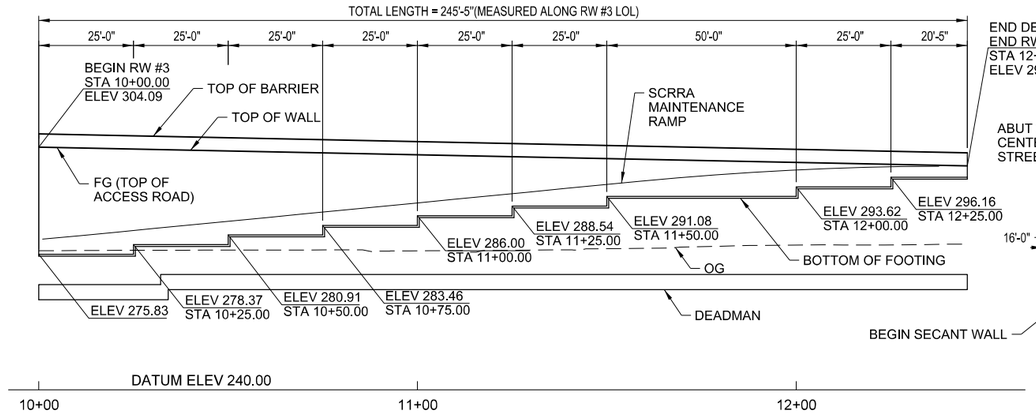

MIRRORED DEVELOPED ELEVATION - RW #3

SCALE: 1"=20'

DEVELOPED ELEVATION - RW #4

SCALE: 1"=20'

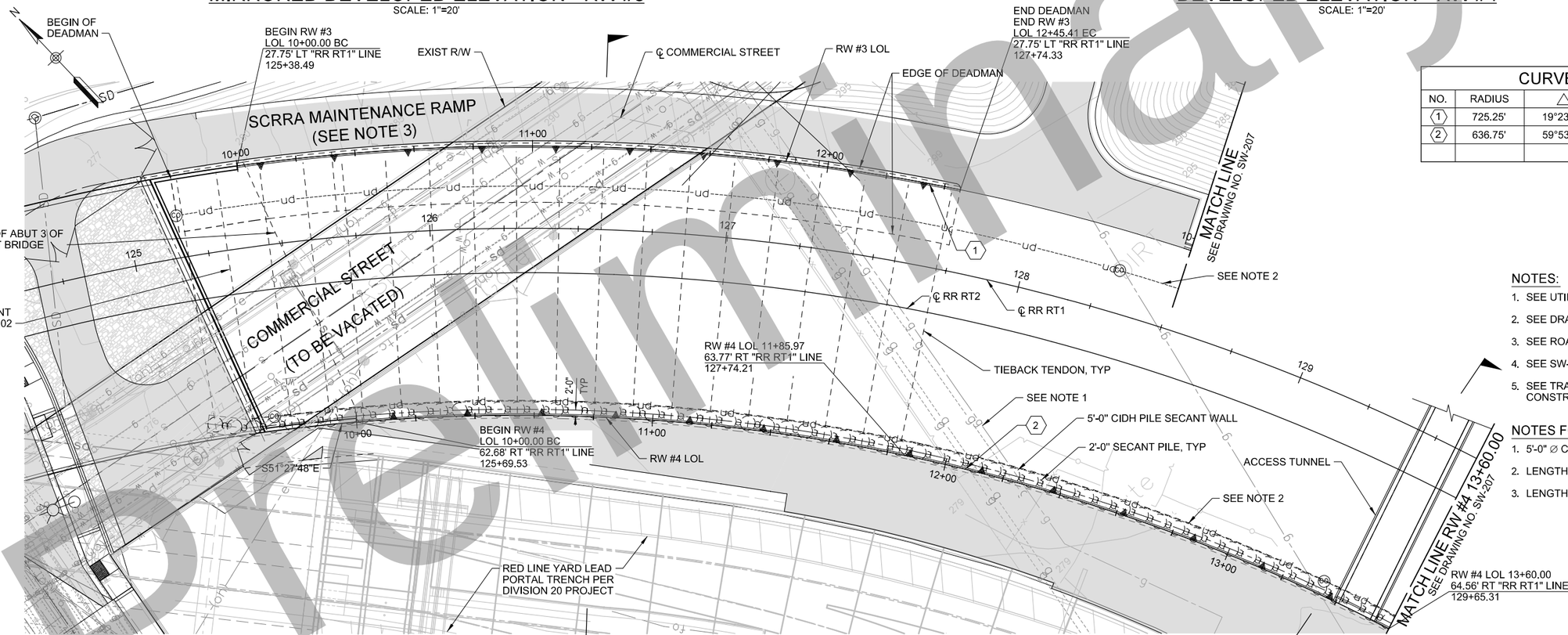

CURVE DATA				
NO.	RADIUS	△	LENGTH	TANGENT
1	725.25'	19°23'16"	245.41'	123.89'
2	636.75'	59°53'40"	665.63'	366.85'

NOTES:

1. SEE UTILITY PLANS FOR EXISTING UTILITIES.
2. SEE DRAINAGE PLANS FOR UNDERDRAIN LOCATIONS.
3. SEE ROADWAY PLANS FOR ROADWAY IMPROVEMENTS.
4. SEE SW-208 AND SW 208A FOR TYPICAL SECTIONS.
5. SEE TRACK PLANS FOR DETAILS OF PROPOSED TRACK CONSTRUCTION.

NOTES FOR QUANTITY ESTIMATE:

1. 5'-0" ∅ CIDH PILE SPACING = 6'-6", TYP
2. LENGTH OF 5'-0" ∅ CIDH PILE = 60'-0"
3. LENGTH OF 2'-0" ∅ SECANT PILE = 30'-0"

A SW-208

PLAN - RW #3 & #4

SCALE: 1"=20'

F SW-208B

35% DESIGN PLANS
NOT FOR CONSTRUCTION

Original plan submittal made in Aug. 2019

THE PREPARATION OF THIS DRAWING HAS BEEN FINANCED IN PART THROUGH A GRANT FROM THE U.S. DEPARTMENT OF TRANSPORTATION, FEDERAL TRANSIT ADMINISTRATION (FTA), UNDER THE FEDERAL TRANSIT ACT OF 1964, AS AMENDED, AND IN PART BY THE TAXES OF THE CITIZENS OF LOS ANGELES COUNTY AND OF THE STATE OF CALIFORNIA.

Rev No.	Date	Description
1	3/21	Updated to show latest civil improvements under east side of bridge
2	12/21	
3	6/22	Updated to show modified Commercial/Center intersection design

DESIGNED BY P. ZHANG
DRAWN BY G. WEI
CHECKED BY C. LI
IN CHARGE T. KIM
DATE 6/01/2022

REGISTERED PROFESSIONAL ENGINEER — No. Exp. CIVIL — STATE OF CALIFORNIA

Metro

LOS ANGELES COUNTY
METROPOLITAN TRANSPORTATION AUTHORITY

IDC CONSULTING ENGINEERS
300 S HARBOR BLVD, SUITE 710
ANAHEIM, CA 92805
(714) 525-9370

HDR ENGINEERING
350 S. GRAND AVENUE SUITE 2200
LOS ANGELES, CA 90071
(213) 239-5800

SUBMITTED: _____ PROJECT MANAGER

APPROVED: _____

LINK UNION STATION PROJECT

OFFSITE STRUCTURES
RW #3 & #4
PLAN LAYOUT

CONTRACT NO

DRAWING NO SW-206 | REV

SCALE 1"=20'

SHEET NO 55

Preliminary

Plot Driver=SCRIP-11X17bw_pdf.pltcfg Pentable=PlotStamp.tbl USER = Gary 9:29:38 AM 3/7/2022 c:\pwworking\sac\d1005007\LUS-SW206-PL.dgn

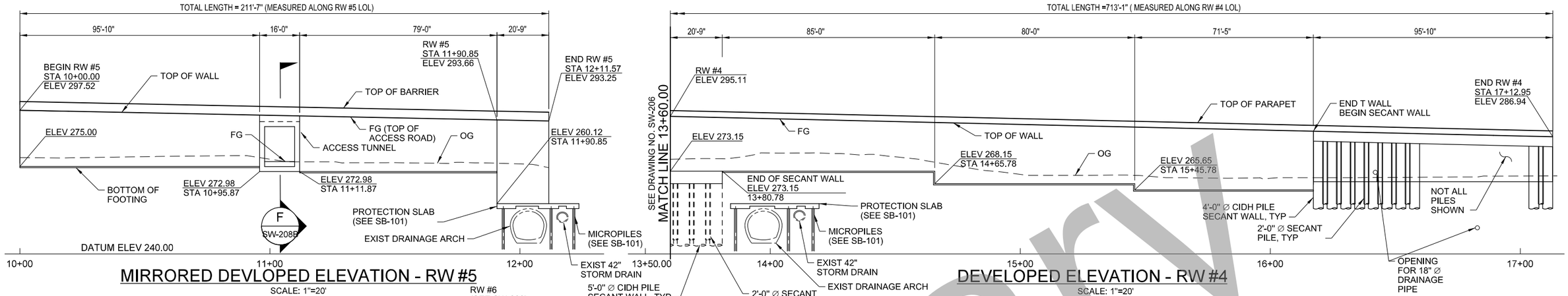

CURVE DATA				
NO.	RADIUS	△	LENGTH	TANGENT
1	725.25'	16°42'51"	211.57'	106.54'
2	636.75'	59°53'40"	665.63'	366.85'

NOTES:

1. SEE UTILITY PLANS FOR EXISTING UTILITIES.
2. SEE DRAINAGE PLANS FOR UNDERDRAIN LOCATIONS.
3. SEE SW-208 AND SW-208A FOR TYPICAL SECTIONS.
4. DISPOSITION OF EMERGENCY VEHICLE TURNAROUND AREA AND SIGNAL HOUSE PROPOSED AS PART OF METRO DIVSION 20 PROJECT TO BE DETERMINED BY METRO.
5. SEE TRACK PLANS FOR DETAILS OF PROPOSED TRACK CONSTRUCTION.

NOTES FOR QUANTITY ESTIMATE:

1. 5'-0" ∅ CIDH PILE SPACING = 6'-6", TYP
2. 4'-0" ∅ CIDH PILE SPACING = 5'-6", TYP
3. LENGTH OF 5'-0" ∅ CIDH PILE = 60'-0"
4. LENGTH OF 4'-0" ∅ CIDH PILE = 60'-0"
5. LENGTH OF 2'-0" ∅ SECANT PILE = 30'-0"

35% DESIGN PLANS
NOT FOR CONSTRUCTION

Preliminary

Original plan submittal made in Aug. 2019

Rev No.	Date	Description
1	3/21	Updated to show Division 20 access road
2	12/21	
3	6/22	

THE PREPARATION OF THIS DRAWING HAS BEEN FINANCED IN PART THROUGH A GRANT FROM THE U.S. DEPARTMENT OF TRANSPORTATION, FEDERAL TRANSIT ADMINISTRATION (FTA), UNDER THE FEDERAL TRANSIT ACT OF 1964, AS AMENDED, AND IN PART BY THE TAXES OF THE CITIZENS OF LOS ANGELES COUNTY AND OF THE STATE OF CALIFORNIA.

DESIGNED BY P. ZHANG
DRAWN BY G. WEI
CHECKED BY C. LI
IN CHARGE T. KIM
DATE 3/05/2021

REGISTERED PROFESSIONAL ENGINEER — No. Exp. CIVIL — STATE OF CALIFORNIA

Metro
LOS ANGELES COUNTY
METROPOLITAN TRANSPORTATION AUTHORITY
IDC CONSULTING ENGINEERS
300 S. HARBOR BLVD.
SUITE 1000
ANAHEIM, CA 92805
(714) 520-9370
HDR ENGINEERING
350 S. GRAND AVENUE
SUITE 1000
LOS ANGELES, CA 90071
(213) 2394800

SUBMITTED: _____ PROJECT MANAGER

APPROVED: _____

LINK UNION STATION PROJECT
OFFSITE STRUCTURES
RW #4 & #5
PLAN LAYOUT

CONTRACT NO
DRAWING NO SW-207
REV
SCALE 1" = 20'
SHEET NO 56

Plot Driver=SCRIP-11X17bw_pdf.pltcfg Pentable=PlotStamp.tbl USER = Gary 8:47:55 AM 5/13/2020 c:\pwworking\sac\d1005007\LUS-SW207-PL.dgn

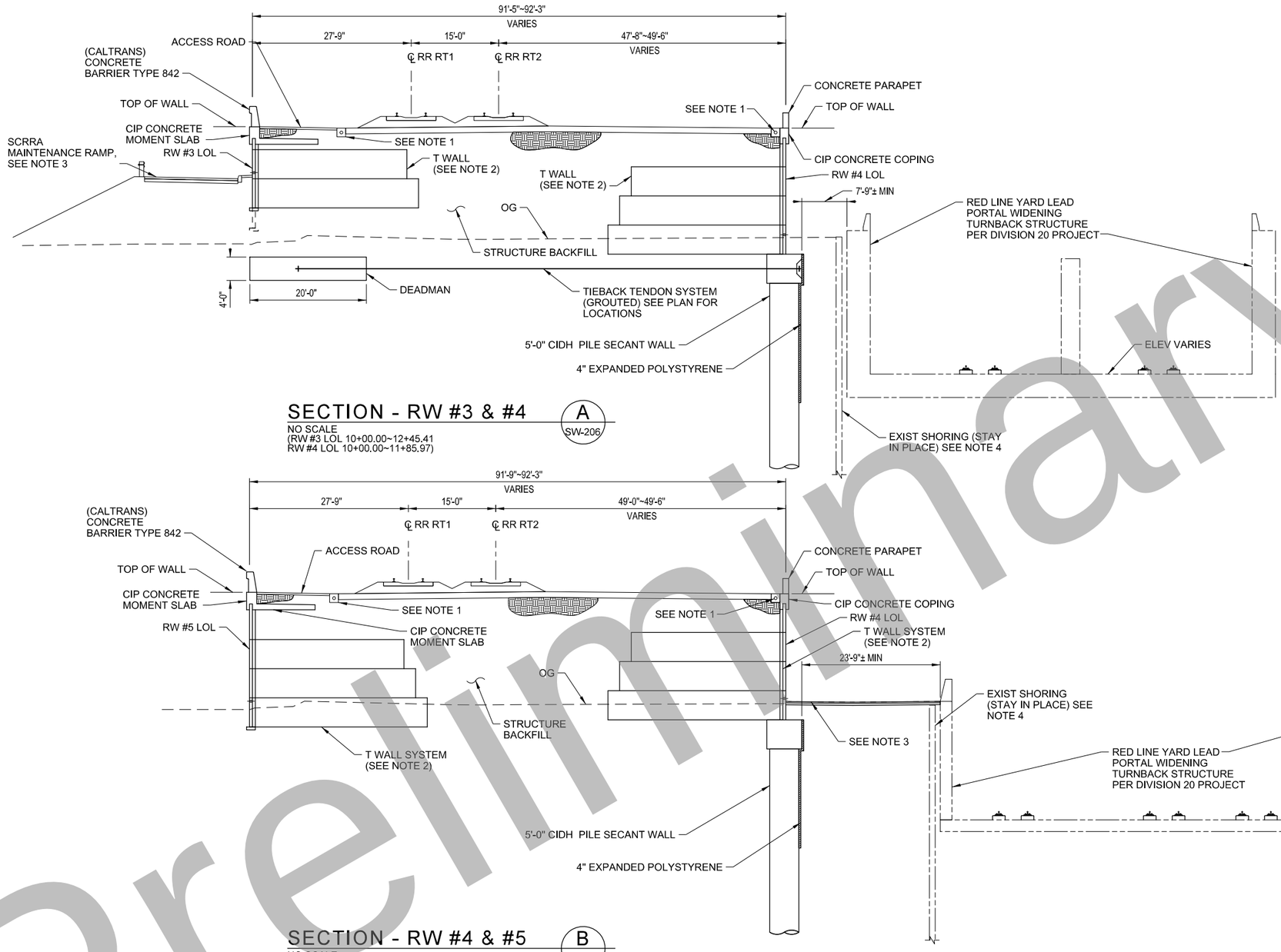

SECTION - RW #3 & #4 (A / SW-206)

NO SCALE
(RW #3 LOL 10+00.00~12+45.41
RW #4 LOL 10+00.00~11+85.97)

SECTION - RW #4 & #5 (B / SW-207)

NO SCALE
(RW #4 LOL 11+85.97~13+80.78
RW #5 LOL 10+00.00~11+91.40)

NOTES FOR QUANTITY ESTIMATE:

1. FOR MOMENT SLAB DIMENSIONS SEE SW-205.

NOTES:

1. SEE DRAINAGE CG-PLANS FOR UNDERDRAIN DETAILS.
2. SEE SW-205 NOTE 3 AND NOTE 4 FOR T WALL SYSTEM.
3. SEE ROADWAY PLANS FOR ROADWAY IMPROVEMENTS.
4. COORDINATE WITH DIVISION 20 AS-BUILT CONDITIONS.
5. SEE TRACK PLANS FOR DETAILS OF PROPOSED TRACK CONSTRUCTION.

Preliminary

35% DESIGN PLANS
NOT FOR CONSTRUCTION

Original plan submittal made in Aug. 2019

THE PREPARATION OF THIS DRAWING HAS BEEN FINANCED IN PART THROUGH A GRANT FROM THE U.S. DEPARTMENT OF TRANSPORTATION, FEDERAL TRANSIT ADMINISTRATION (FTA), UNDER THE FEDERAL TRANSIT ACT OF 1964, AS AMENDED, AND IN PART BY THE TAXES OF THE CITIZENS OF LOS ANGELES COUNTY AND OF THE STATE OF CALIFORNIA.

Rev No.	Date	Description
1	3/21	
2	12/21	
3	6/22	

DESIGNED BY P. ZHANG
DRAWN BY G. WEI
CHECKED BY C. LI
IN CHARGE T. KIM
DATE 8/01/2019

REGISTERED PROFESSIONAL ENGINEER — No. Exp. CIVIL — STATE OF CALIFORNIA

Metro
LOS ANGELES COUNTY
METROPOLITAN TRANSPORTATION AUTHORITY
IDC CONSULTING ENGINEERS
300 S. HARBOR BLVD. SUITE 710 ANAHEIM, CA 92805 (714) 520-9070
HDR ENGINEERING
350 S. GRAND AVENUE SUITE 2500 LOS ANGELES, CA 90071 (213) 239-5800

SUBMITTED: _____ PROJECT MANAGER

APPROVED: _____

LINK UNION STATION PROJECT

OFFSITE STRUCTURES
RW #3 #4 & #5
TYPICAL SECTION 1 of 2

CONTRACT NO
DRAWING NO SW-208 REV
SCALE NO SCALE
SHEET NO 57

Plot Driver=SCRIP-11X17bw_pdf.pltcfg Pentable=PlotStamp.tbl USER = Gary 8:48:11 AM 5/13/2020 c:\pwworking\sac\d1005007\LUS-SW208-TS.dgn

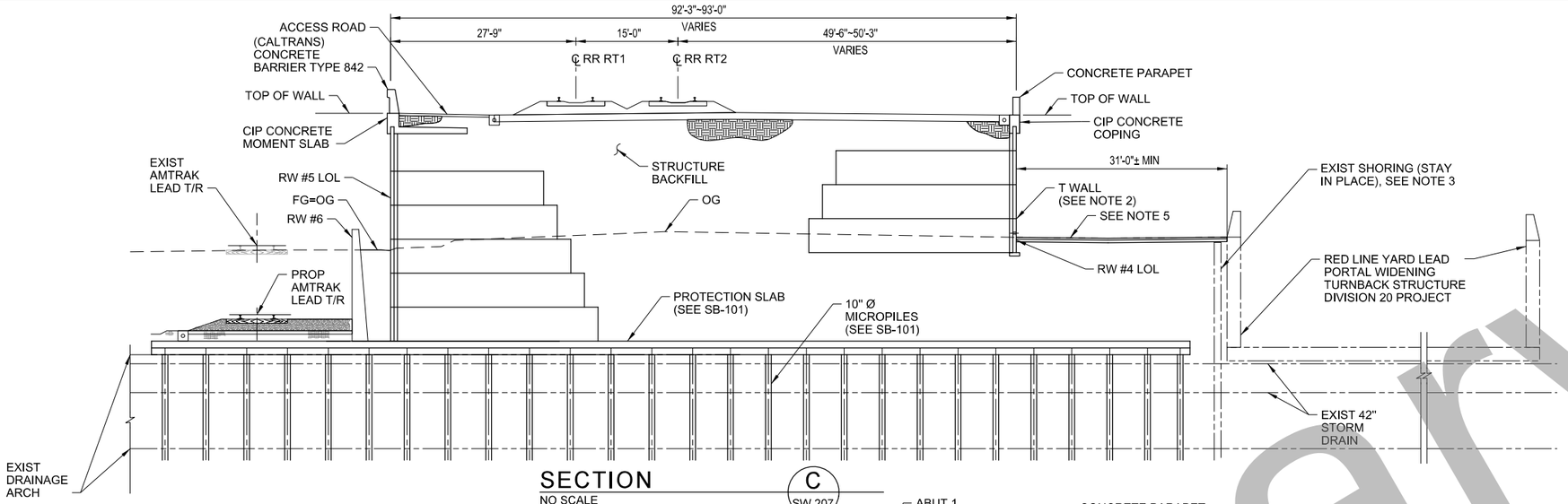

SECTION C

NO SCALE
(RW #4 LOL 13+80.78~15+45.32
RW #5 LOL 11+91.40~12+11.57)

SW-207

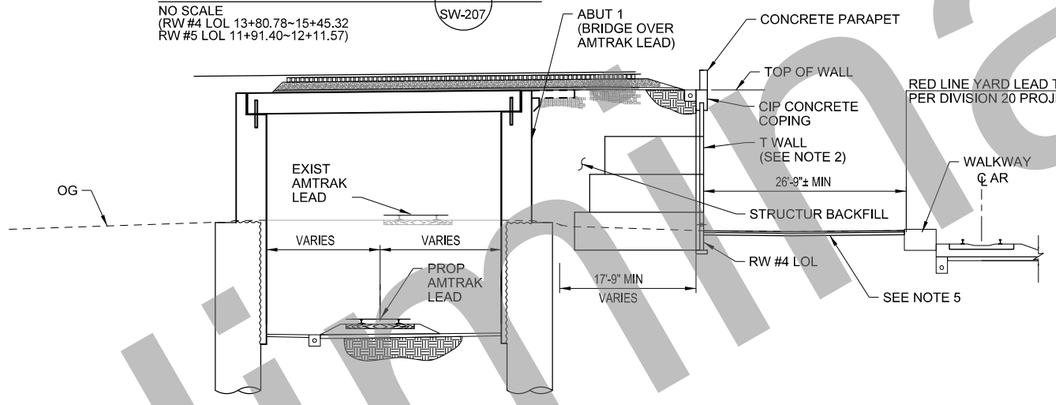

SECTION D

NO SCALE
(RW #4 LOL 15+45.32~16+17.20)

SW-207

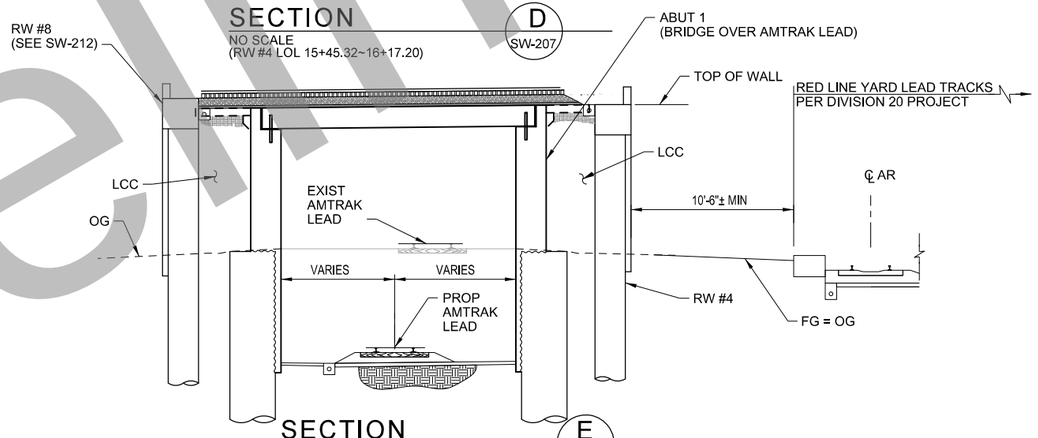

SECTION E

NO SCALE
(RW #4 LOL 16+17.20~17+13.01)

SW-207

NOTES:

1. SEE DRAINAGE CG-PLANS FOR UNDERDRAIN DETAILS.
2. SEE SW-205 NOTE 3 AND NOTE 4 FOR T WALL SYSTEM.
3. COORDINATE WITH DIVISION 20 AS-BUILT CONDITIONS.
4. SEE TRACK PLANS FOR DETAILS OF PROPOSED TRACK CONSTRUCTION.
5. SEE ROADWAY PLANS FOR ROADWAY IMPROVEMENTS.

NOTES FOR QUANTITY ESTIMATE:

1. FOR MOMENT SLAB DIMENSIONS SEE SW-205.

Preliminary

Original plan submittal made in Aug. 2019

35% DESIGN PLANS
NOT FOR CONSTRUCTION

THE PREPARATION OF THIS DRAWING HAS BEEN FINANCED IN PART THROUGH A GRANT FROM THE U.S. DEPARTMENT OF TRANSPORTATION, FEDERAL TRANSIT ADMINISTRATION (FTA), UNDER THE FEDERAL TRANSIT ACT OF 1964, AS AMENDED, AND IN PART BY THE TAXES OF THE CITIZENS OF LOS ANGELES COUNTY AND OF THE STATE OF CALIFORNIA.

Rev No.	Date	Description
1	3/21	
2	12/21	
3	6/22	

DESIGNED BY P. ZHANG
DRAWN BY G. WEI
CHECKED BY C. LI
IN CHARGE T. KIM
DATE 8/01/2019

REGISTERED PROFESSIONAL ENGINEER — No. Exp. CIVIL — STATE OF CALIFORNIA

Metro
LOS ANGELES COUNTY METROPOLITAN TRANSPORTATION AUTHORITY
IDC CONSULTING ENGINEERS 300 S. HARBOR BLVD. SUITE 710 ANAHEIM, CA 92805 (714) 520-9070
HDR ENGINEERING 350 S. GRAND AVENUE SUITE 2500 LOS ANGELES, CA 90071 (213) 239-5800

SUBMITTED: _____ PROJECT MANAGER

APPROVED: _____

LINK UNION STATION PROJECT

OFFSITE STRUCTURES

RW #3 #4 & #5
TYPICAL SECTION 2 of 2

CONTRACT NO
DRAWING NO SW-208A
REV
SCALE NO SCALE
SHEET NO 58

Plot Driver=SCRIP-11X17bw_pdf.pltcfg Pentable=PlotStamp.tbl USER = Gary 8:48:36 AM 5/13/2020 c:\pwworking\sac\d1005007\LUS-SW208A-TS.dgn

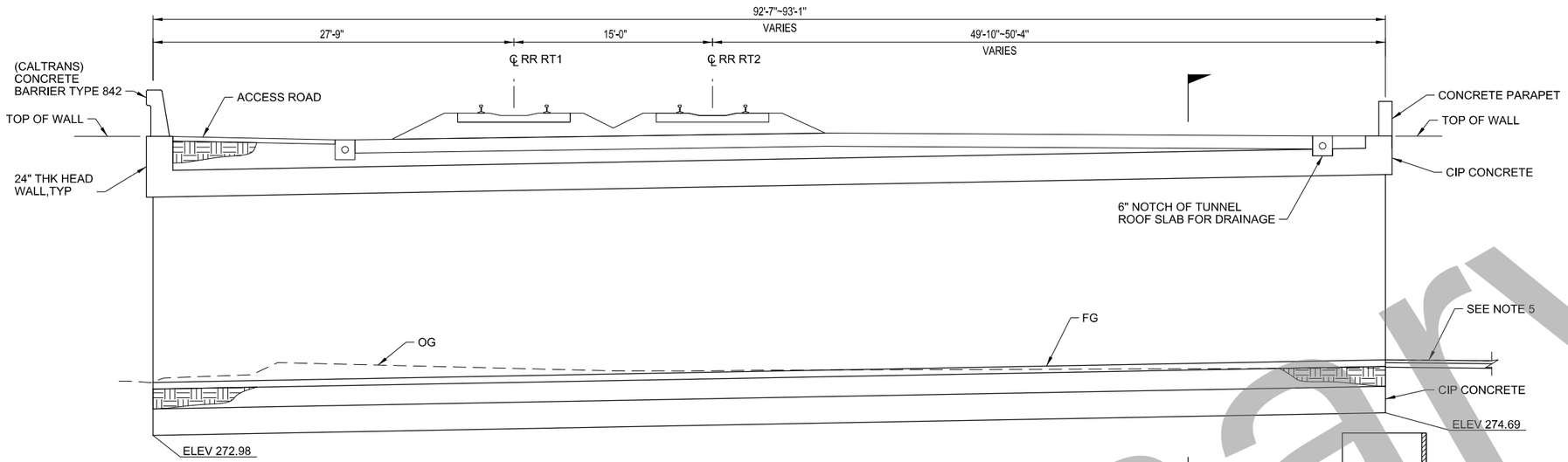

SECTION
1" = 5'-0"

F (SW-206) F (SW-207)

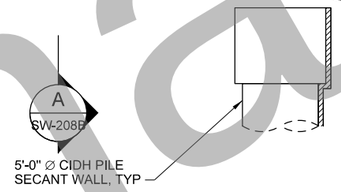

NOTES:

1. SEE UTILITY PLANS FOR EXISTING UTILITIES.
2. SEE DRAINAGE CG-PLANS FOR UNDERDRAIN DETAILS.
3. SEE SW-205 NOTE 3 AND NOTE 4 FOR T WALL SYSTEM.
4. SEE TRACK PLANS FOR DETAILS OF PROPOSED TRACK CONSTRUCTION.
5. SEE ROADWAY PLANS FOR ROADWAY IMPROVEMENTS.

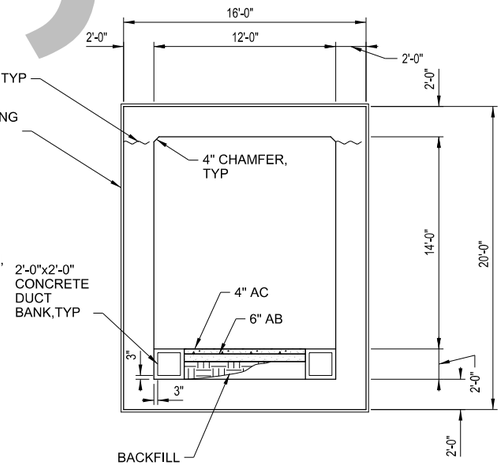

SECTION
1" = 5'-0"

A (SW-208B)

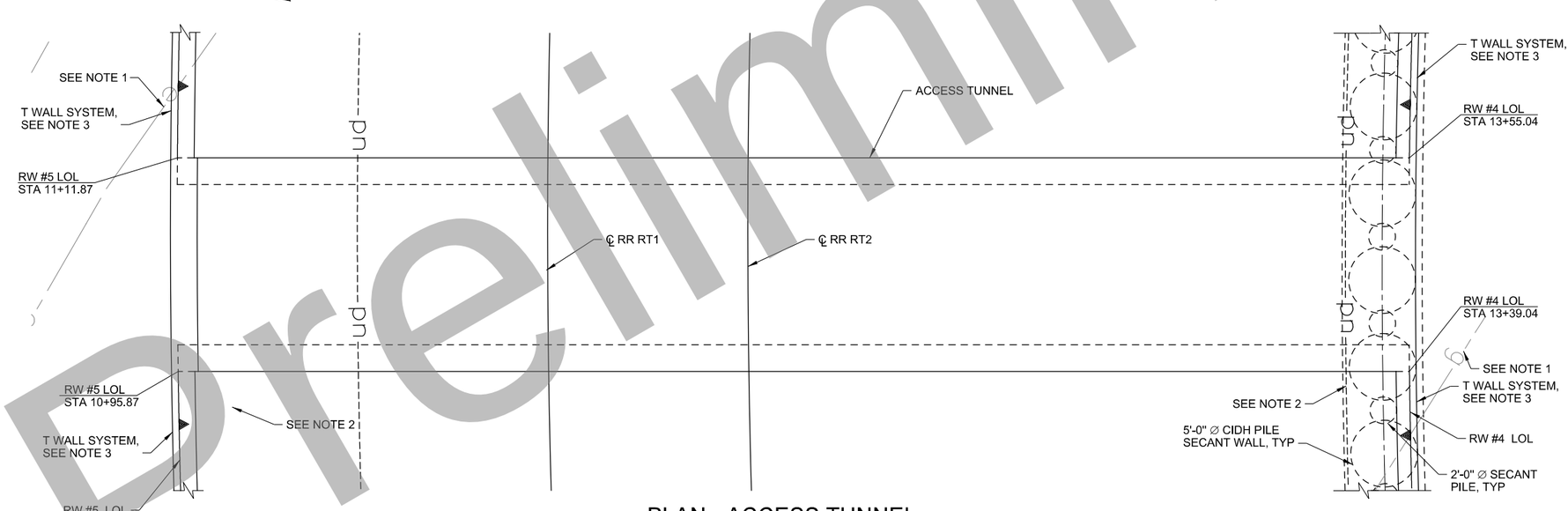

PLAN - ACCESS TUNNEL
SCALE: 1"=5'-0"

35% DESIGN PLANS
NOT FOR CONSTRUCTION

Original plan submittal made in Aug. 2019

Preliminary

THE PREPARATION OF THIS DRAWING HAS BEEN FINANCED IN PART THROUGH A GRANT FROM THE U.S. DEPARTMENT OF TRANSPORTATION, FEDERAL TRANSIT ADMINISTRATION (FTA), UNDER THE FEDERAL TRANSIT ACT OF 1964, AS AMENDED, AND IN PART BY THE TAXES OF THE CITIZENS OF LOS ANGELES COUNTY AND OF THE STATE OF CALIFORNIA.

Rev No.	Date	Description
1	3/21	Plan added to set
2	12/21	
3	6/22	

DESIGNED BY P. ZHANG
DRAWN BY G. WEI
CHECKED BY C. LI
IN CHARGE T. KIM
DATE 3/05/2021

REGISTERED PROFESSIONAL ENGINEER — No. Exp. CIVIL — STATE OF CALIFORNIA

Metro

LOS ANGELES COUNTY
METROPOLITAN TRANSPORTATION AUTHORITY

IDC CONSULTING ENGINEERS
300 S HARBOR BLVD.
SUITE 710
ANAHEIM, CA 92805
(714) 520-9070

HDR ENGINEERING
350 S. GRAND AVENUE
SUITE 2500
LOS ANGELES, CA 90071
(213) 2394900

SUBMITTED: _____ PROJECT MANAGER

APPROVED: _____

LINK UNION STATION PROJECT
OFFSITE STRUCTURES
ACCESS TUNNEL

CONTRACT NO
DRAWING NO SW-208B
REV
SCALE 1" =5'-0"
SHEET NO 59

Plot Driver=SCRIP-11X17bw_pdf.pltcfg Pentable=PlotStamp.tbl USER = Gary 8:48:53 AM 5/13/2020 c:\pwworking\sac\d1005007\LUS-SW208B-TS.dgn

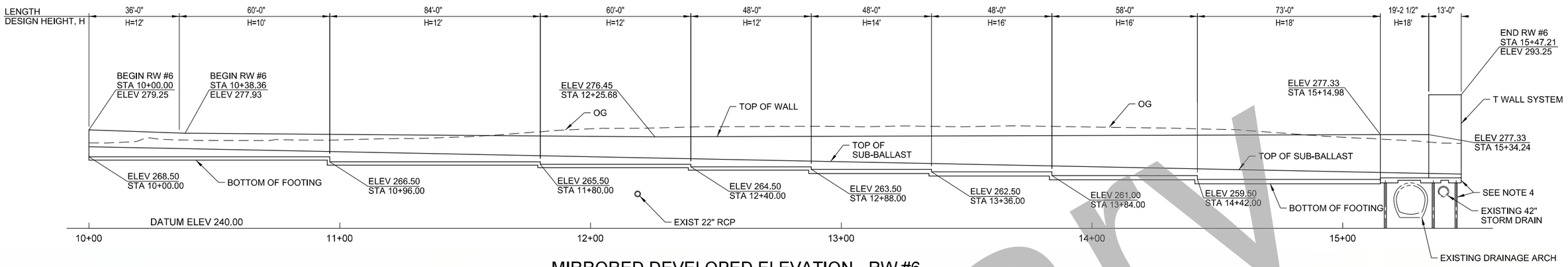

MIRRORED DEVELOPED ELEVATION - RW #6

SCALE: 1"=20'

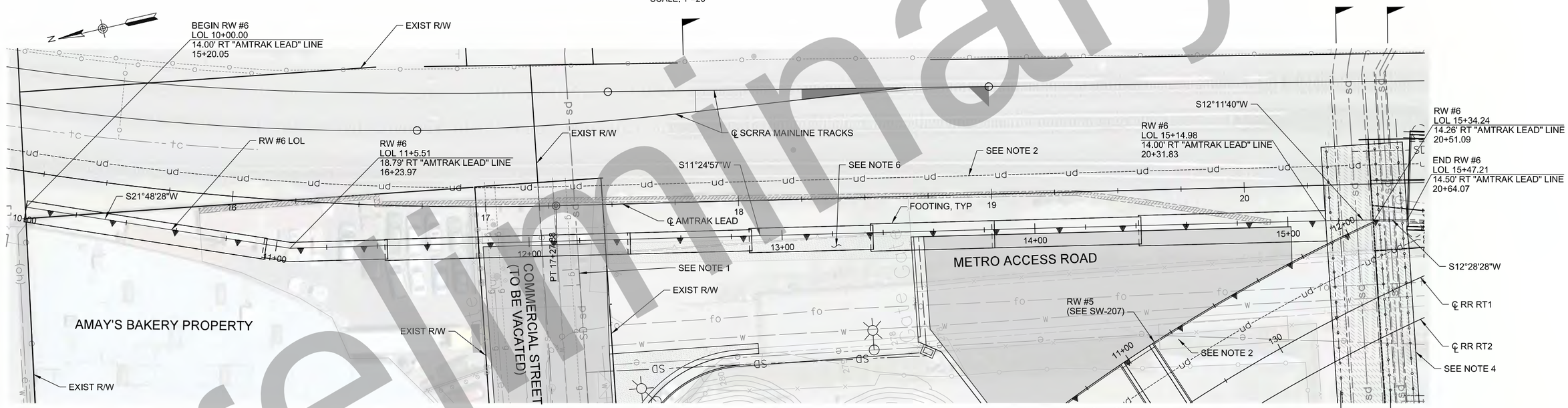

PLAN - RW #6

SCALE: 1"=20'

A
SW-210

B
SW-210

C
SW-210

LEGEND:

EXIST RW REMOVAL

NOTES:

1. SEE UTILITY PLANS FOR EXISTING UTILITIES.
2. SEE DRAINAGE PLANS FOR UNDERDRAIN LOCATIONS.
3. SEE SW-210 FOR TYPICAL SECTIONS.
4. SEE SB-101 FOR PROTECTION SLAB.
5. SEE TRACK PLANS FOR DETAILS OF PROPOSED TRACK CONSTRUCTION.
6. SEE ROADWAY PLANS FOR ROADWAY IMPROVEMENTS

35% DESIGN PLANS
NOT FOR CONSTRUCTION

Preliminary

Original plan submittal made in Aug. 2019

THE PREPARATION OF THIS DRAWING HAS BEEN FINANCED IN PART THROUGH A GRANT FROM THE U.S. DEPARTMENT OF TRANSPORTATION, FEDERAL TRANSIT ADMINISTRATION (FTA), UNDER THE FEDERAL TRANSIT ACT OF 1964, AS AMENDED, AND IN PART BY THE TAXES OF THE CITIZENS OF LOS ANGELES COUNTY AND OF THE STATE OF CALIFORNIA.

Rev No.	Date	Description
1	3/21	Updated to reflect Amay's property preservation and latest civil improvements
2	12/21	
3	6/22	Updated to show modified access road design

DESIGNED BY L. LIU
DRAWN BY G. WEI
CHECKED BY P. ZHANG
IN CHARGE T. KIM
DATE 6/01/2022

REGISTERED PROFESSIONAL ENGINEER — No. Exp. CIVIL — STATE OF CALIFORNIA

Metro
LOS ANGELES COUNTY
METROPOLITAN TRANSPORTATION AUTHORITY
IDC CONSULTING ENGINEERS
300 S HARBOR BLVD., SUITE 700
ANAHEIM, CA 92805
(714) 523-6070
HDR ENGINEERING
300 S. GRAND AVENUE
SUITE 1000
LOS ANGELES, CA 90071
(213) 236-0800

SUBMITTED: _____ PROJECT MANAGER

APPROVED: _____

LINK UNION STATION PROJECT

OFFSITE STRUCTURES
RW #6
PLAN LAYOUT

CONTRACT NO
DRAWING NO SW-209
REV
SCALE 1"=20'-0"
SHEET NO 60

c:\pwworking\sac\d1005007\LUS-SW209-PL.dgn
3/7/2022 9:32:34 AM
USER = Gary
Pentable=PlotStamp.tbl
Plot Driver=SCRIP-11X17bw_pdf.pltcfg

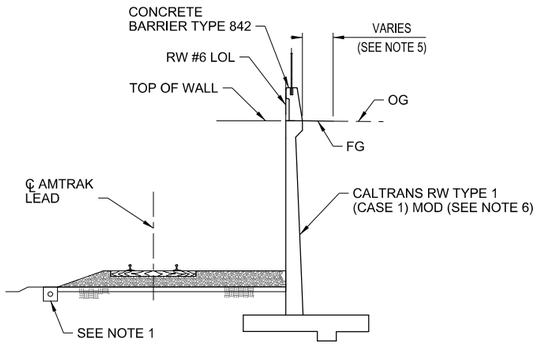

SECTION - RW #6 (A)

NO SCALE
(RW #6 LOL 10+00.00~15+14.98)

SW-209

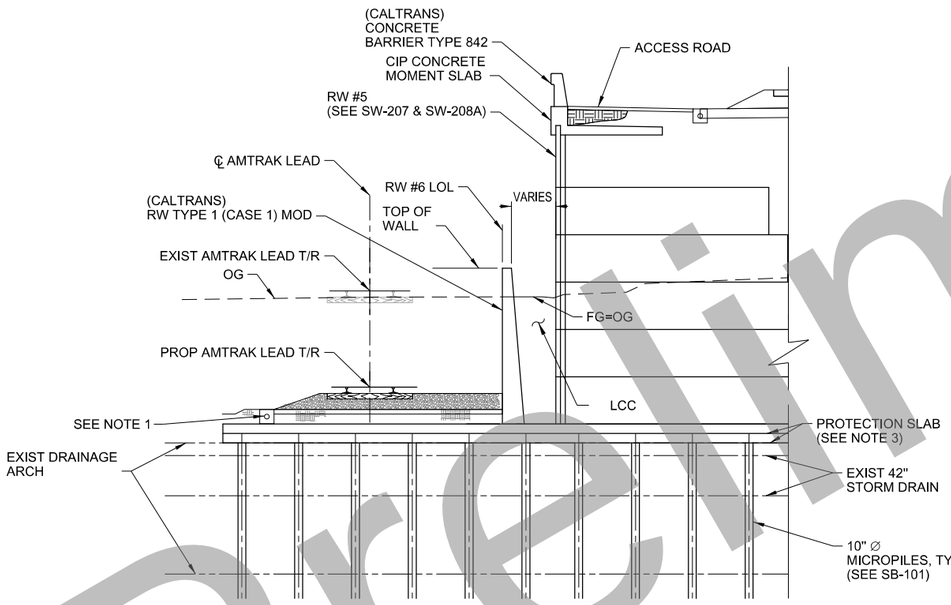

SECTION - RW #6 (B)

NO SCALE
(RW #6 LOL 15+14.98 ~ 15+34.24)

SW-209

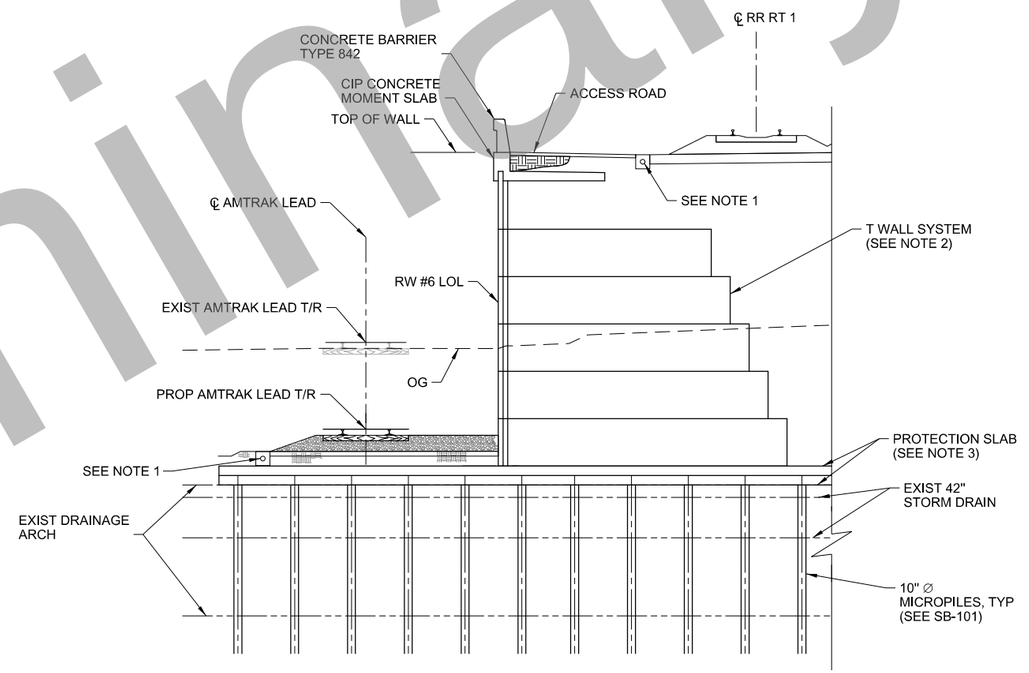

SECTION - RW #6 (C)

NO SCALE
(RW #6 LOL 15+34.24 ~ 15+47.21)

SW-209

NOTES FOR QUANTITY ESTIMATE:

1. FOR MOMENT SLAB DIMENSIONS SEE SW-205.

NOTES:

1. FOR UNDERDRAIN DETAILS SEE DRAINAGE CG-PLANS.
2. FOR T WALL SYSTEM SEE SW-205 NOTE 3 AND NOTE 4.
3. FOR PROTECTION SLAB SEE SB-101.
4. FOR DETAILS OF PROPOSED TRACK CONSTRUCTION SEE TRACK PLANS.
5. REMOVE AND REPLACE EXISTING PAVEMENT IN KIND. WIDTH IS BASED ON EXCAVATION PRISM NEEDED TO CONSTRUCT WALL.
6. WALL TYPE TO BE MODIFIED DURING FINAL DESIGN TO REDUCE IMPACTS TO AMAY'S BAKERY PROPERTY.

Preliminary

35% DESIGN PLANS
NOT FOR CONSTRUCTION

Original plan submittal made in Aug. 2019

THE PREPARATION OF THIS DRAWING HAS BEEN FINANCED IN PART THROUGH A GRANT FROM THE U.S. DEPARTMENT OF TRANSPORTATION, FEDERAL TRANSIT ADMINISTRATION (FTA), UNDER THE FEDERAL TRANSIT ACT OF 1964, AS AMENDED, AND IN PART BY THE TAXES OF THE CITIZENS OF LOS ANGELES COUNTY AND OF THE STATE OF CALIFORNIA.

Rev No.	Date	Description
1	3/21	Section A updated to reflect preservation of Amay's property
2	12/21	
3	6/22	

DESIGNED BY L. LIU
DRAWN BY G. WEI
CHECKED BY P. ZHANG
IN CHARGE T. KIM
DATE 3/05/2021

REGISTERED PROFESSIONAL ENGINEER — No. ____ Exp. ____ CIVIL — STATE OF CALIFORNIA

Metro

LOS ANGELES COUNTY
METROPOLITAN TRANSPORTATION AUTHORITY

IDC CONSULTING ENGINEERS
300 S HARBOR BLVD., SUITE 710
ANAHEIM, CA 92805
(714) 520-0970

HDR ENGINEERING
350 S. GRAND AVENUE
SUITE 2600
LOS ANGELES, CA 90071
(213) 236-5800

SUBMITTED: _____ PROJECT MANAGER

APPROVED: _____

LINK UNION STATION PROJECT

OFFSITE STRUCTURES
RW #6
TYPICAL SECTION

CONTRACT NO

DRAWING NO SW-210 | REV

SCALE NO SCALE

SHEET NO 61

Plot Driver=SCRP-11X17bw_pdf.pltcfg Pentable=PlotStamp.tbl USER = Gary 1:06:41 PM 2/22/2021 c:\pwworking\sac\d1005007\LUS-SW210-TS.dgn

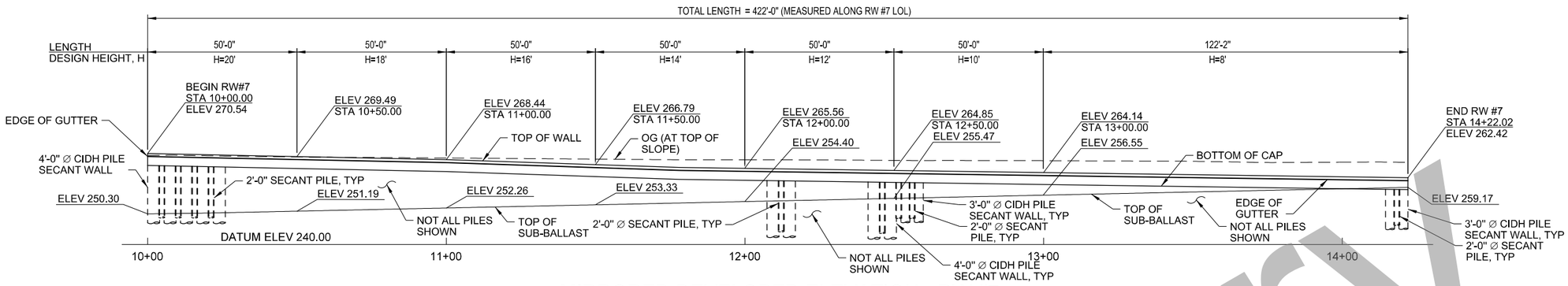

MIRRORED DEVELOPED ELEVATION - RW #7

SCALE: 1"=20'

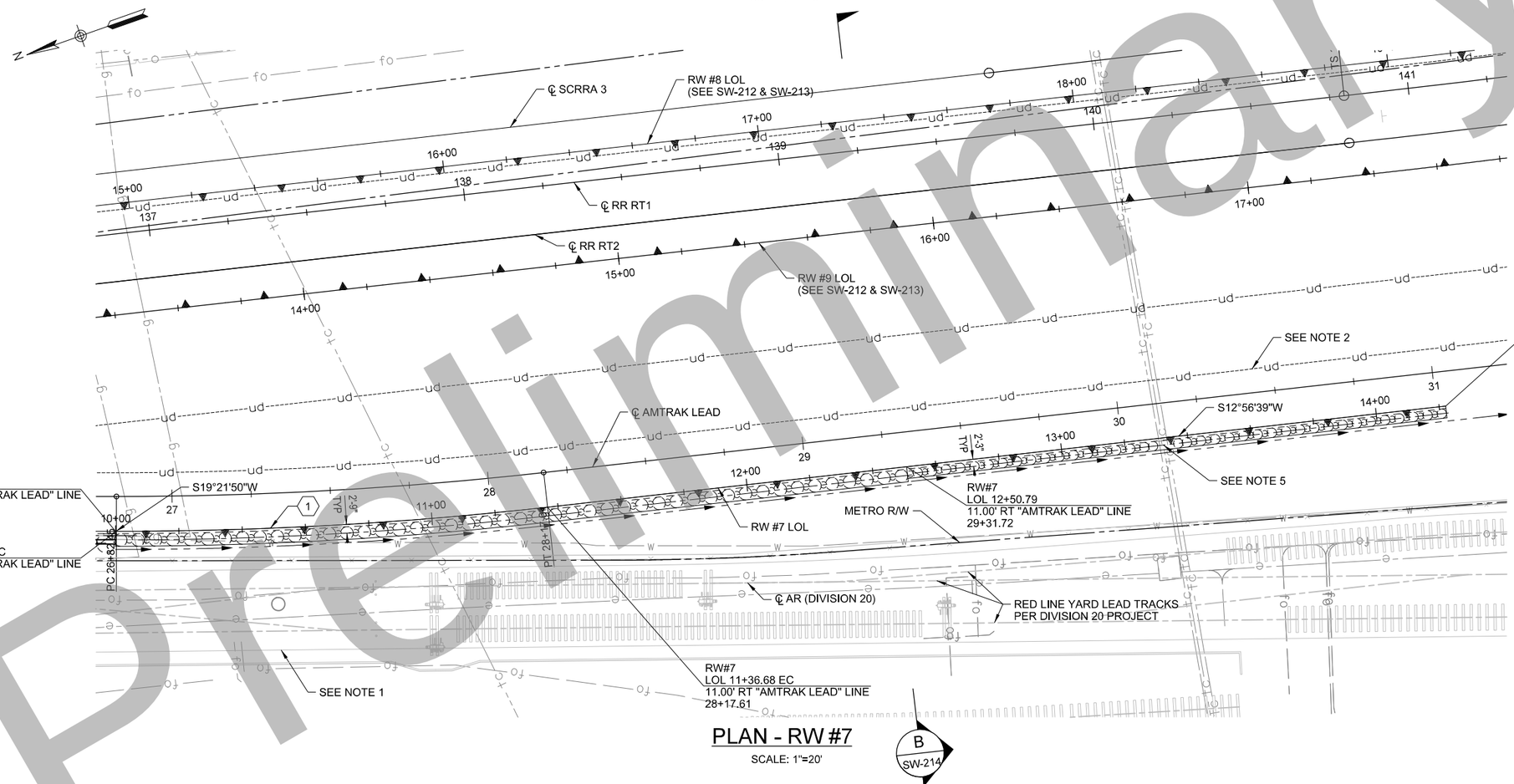

PLAN - RW #7

SCALE: 1"=20'

B
SW-214

NOTES FOR QUANTITY ESTIMATE:

1. 4'-0" ∅ CIDH PILE SPACING = 5'-6", TYP
2. 3'-0" ∅ CIDH PILE SPACING = 4'-6", TYP
3. LENGTH OF 4'-0" ∅ CIDH PILE = 75'-0"
4. LENGTH OF 3'-0" ∅ CIDH PILE = 30'-0"
5. LENGTH OF 2'-0" ∅ SECANT PILE = 23-0"

NOTES:

1. SEE UTILITY PLANS FOR EXISTING UTILITIES.
2. SEE DRAINAGE PLANS FOR UNDERDRAIN LOCATIONS.
3. SEE SW-214 FOR TYPICAL SECTIONS.
4. SEE TRACK PLANS FOR DETAILS OF PROPOSED TRACK CONSTRUCTION.
5. WHERE EXISTING UTILITIES ARE IN CONFLICT WITH THE CIDH SECANT WALL PILES INSTALLATION, ELIMINATE ONE OR TWO CIDH PILES AT THE LOCATION IN CONFLICT. CONSTRUCT THE CONTINUOUS CAP BEAM SPANNING OVER THE EXISTING UTILITIES AT THE BASE OF THE RETAINING WALL SECTIONS.

CURVE DATA				
NO.	RADIUS	△	LENGTH	TANGENT
1	1217.57'	6°25'11"	136.42'	68.28'

35% DESIGN PLANS
NOT FOR CONSTRUCTION

Preliminary

Original plan submittal made in Aug. 2019

THE PREPARATION OF THIS DRAWING HAS BEEN FINANCED IN PART THROUGH A GRANT FROM THE U.S. DEPARTMENT OF TRANSPORTATION, FEDERAL TRANSIT ADMINISTRATION (FTA), UNDER THE FEDERAL TRANSIT ACT OF 1964, AS AMENDED, AND IN PART BY THE TAXES OF THE CITIZENS OF LOS ANGELES COUNTY AND OF THE STATE OF CALIFORNIA.

Rev No.	Date	Description
1	3/21	
2	12/21	
3	6/22	

DESIGNED BY L. LIU
DRAWN BY G. WEI
CHECKED BY P. ZHANG
IN CHARGE T. KIM
DATE 8/01/2019

REGISTERED PROFESSIONAL ENGINEER — No. Exp. CIVIL — STATE OF CALIFORNIA

Metro
LOS ANGELES COUNTY
METROPOLITAN TRANSPORTATION AUTHORITY

IDC CONSULTING ENGINEERS
300 S. HARBOR BLVD. SUITE 1000
ANAHEIM, CA 92805
(714) 520-9370

HDR ENGINEERING
350 S. GRAND AVENUE SUITE 2600
LOS ANGELES, CA 90071
(213) 236-5800

SUBMITTED: _____ PROJECT MANAGER
APPROVED: _____

LINK UNION STATION PROJECT
OFFSITE STRUCTURES
RW #7
PLAN LAYOUT

CONTRACT NO
DRAWING NO SW-211
REV
SCALE 1"=20'
SHEET NO 62

Plot Driver=SCRIP-11X17bw_pdf.pltcfg Pentable=PlotStamp.tbl USER = Gary 10:08:02 AM 5/14/2020 c:\pwworking\sac\d1005007\LUS-SW211-PL.dgn

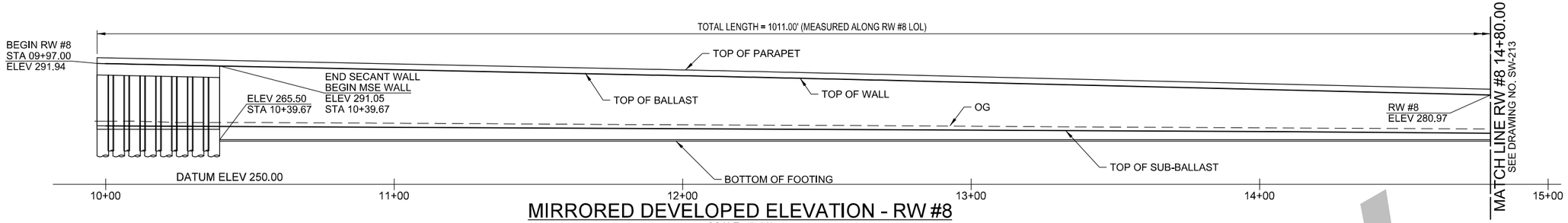

MIRRORED DEVELOPED ELEVATION - RW #8

SCALE: 1"=20'

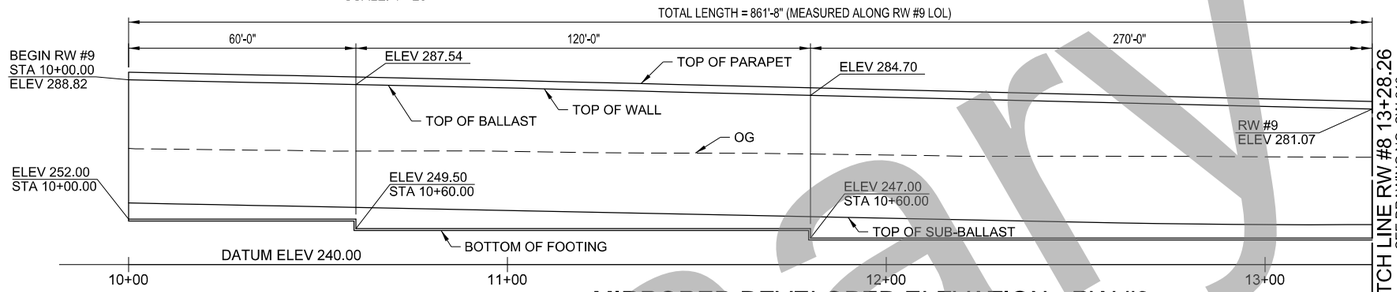

MIRRORED DEVELOPED ELEVATION - RW #9

SCALE: 1"=20'

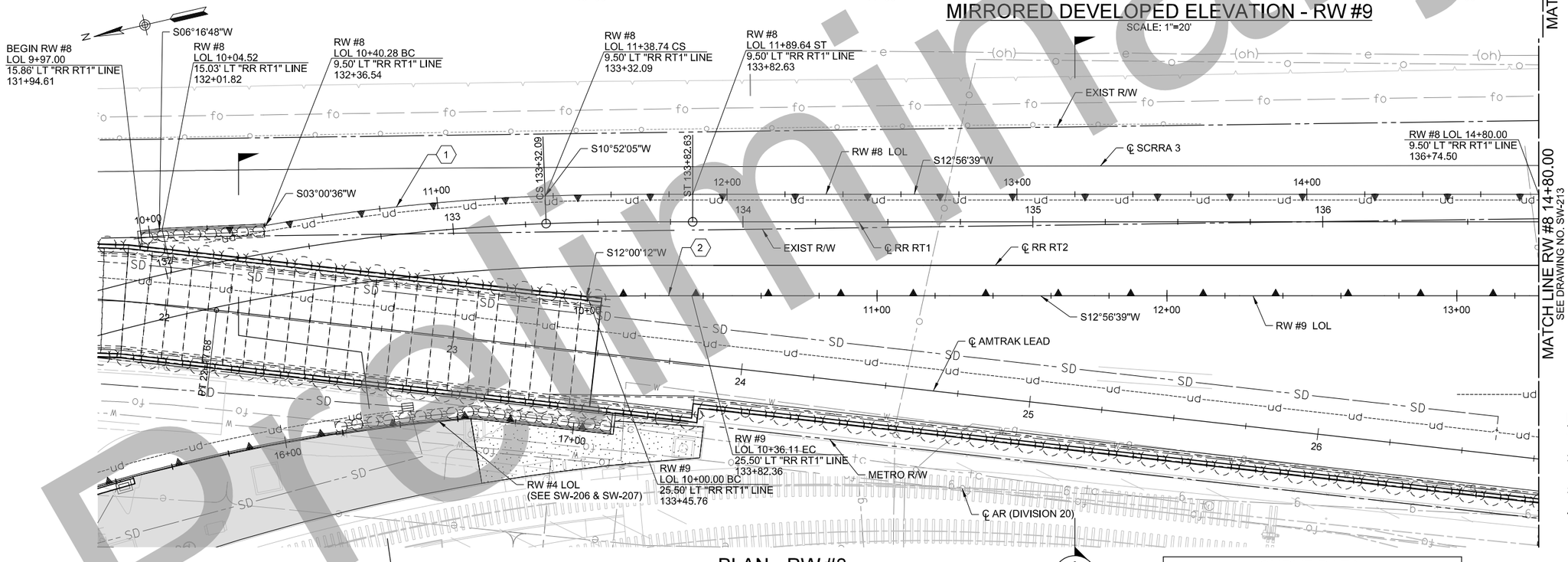

PLAN - RW #8

SCALE: 1"=20'

CURVE DATA

NO.	RADIUS	△	LENGTH	TANGENT
1	707.00'	7°51'29"	96.97'	48.56'
2	1826.74'	1°07'58"	36.11'	18.06'

NOTES:

1. SEE UTILITY PLANS FOR EXISTING UTILITIES.
2. SEE DRAINAGE PLANS FOR UNDERDRAIN LOCATIONS.
3. SEE SW-214 FOR TYPICAL SECTION.
4. SEE TRACK PLANS FOR DETAILS OF PROPOSED TRACK CONSTRUCTION.

35% DESIGN PLANS
NOT FOR CONSTRUCTION

Preliminary

Original plan submittal made in Aug. 2019

THE PREPARATION OF THIS DRAWING HAS BEEN FINANCED IN PART THROUGH A GRANT FROM THE U.S. DEPARTMENT OF TRANSPORTATION, FEDERAL TRANSIT ADMINISTRATION (FTA), UNDER THE FEDERAL TRANSIT ACT OF 1964, AS AMENDED, AND IN PART BY THE TAXES OF THE CITIZENS OF LOS ANGELES COUNTY AND OF THE STATE OF CALIFORNIA.

Rev No.	Date	Description
1	3/21	Updated to reflect modified Ret Wall 9 design and shorter Amtrak lead bridge
2	12/21	
3	6/22	

DESIGNED BY L. LIU
DRAWN BY G. WEI
CHECKED BY P. ZHANG
IN CHARGE T. KIM
DATE 3/05/2021

REGISTERED PROFESSIONAL ENGINEER — No. Exp. CIVIL — STATE OF CALIFORNIA

Metro
LOS ANGELES COUNTY
METROPOLITAN TRANSPORTATION AUTHORITY

IDC CONSULTING ENGINEERS
300 S. HARBOR BLVD.
SUITE 710
ANAHEIM, CA 92805
(714) 520-9070

HDR ENGINEERING
350 S. GRAND AVENUE
SUITE 2500
LOS ANGELES, CA 90071
(213) 239-5800

SUBMITTED: _____ PROJECT MANAGER

APPROVED: _____

LINK UNION STATION PROJECT

OFFSITE STRUCTURES
RW #8 & #9
PLAN LAYOUT 1 OF 2

CONTRACT NO
DRAWING NO SW-212
REV
SCALE 1" = 20'
SHEET NO 63

Plot Driver=SCRIP-11X17bw_pdf.pltcfg Pentable=PlotStamp.tbl USER = Gary 8:50:30 AM 5/13/2020 c:\pwworking\sac\d1005007\LUS-SW212-PL.dgn

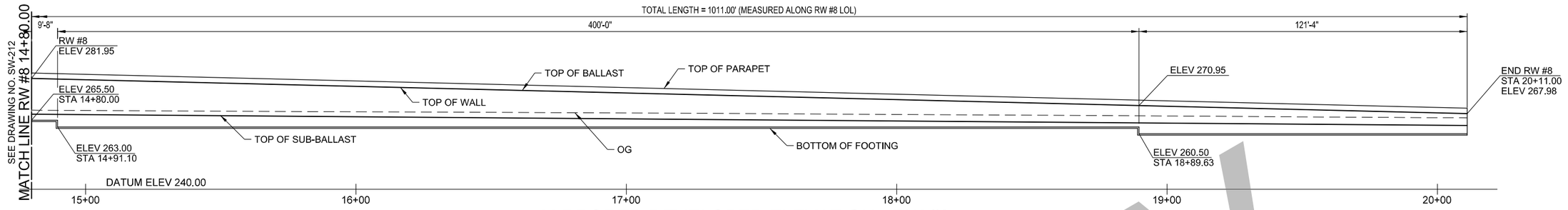

MIRRORED DEVELOPED ELEVATION - RW #8

SCALE: 1"=20'

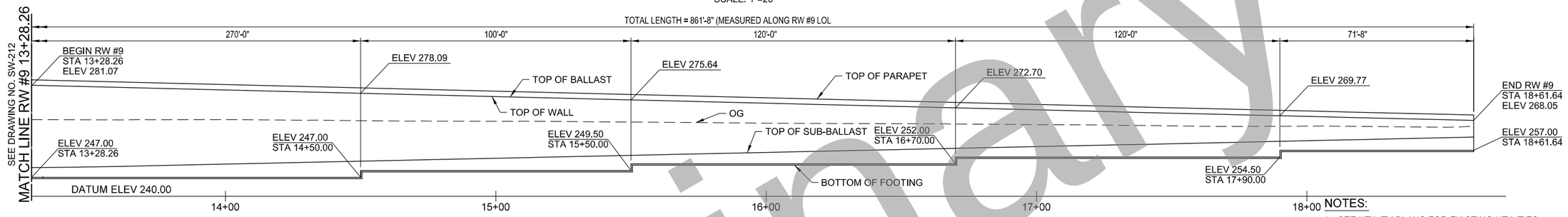

DEVELOPED ELEVATION - RW #9

SCALE: 1"=20'

CURVE DATA				
NO.	RADIUS	△	LENGTH	TANGENT
1	1264.07'	02°05'41"	46.21'	23.11'
2	1299.07'	02°07'00"	47.99'	24.00'

NOTES:

1. SEE UTILITY PLANS FOR EXISTING UTILITIES.
2. SEE DRAINAGE PLANS FOR UNDERDRAIN LOCATIONS.
3. SEE SW-214 FOR TYPICAL SECTIONS.
4. SEE TRACK PLANS FOR DETAILS OF PROPOSED TRACK CONSTRUCTION.

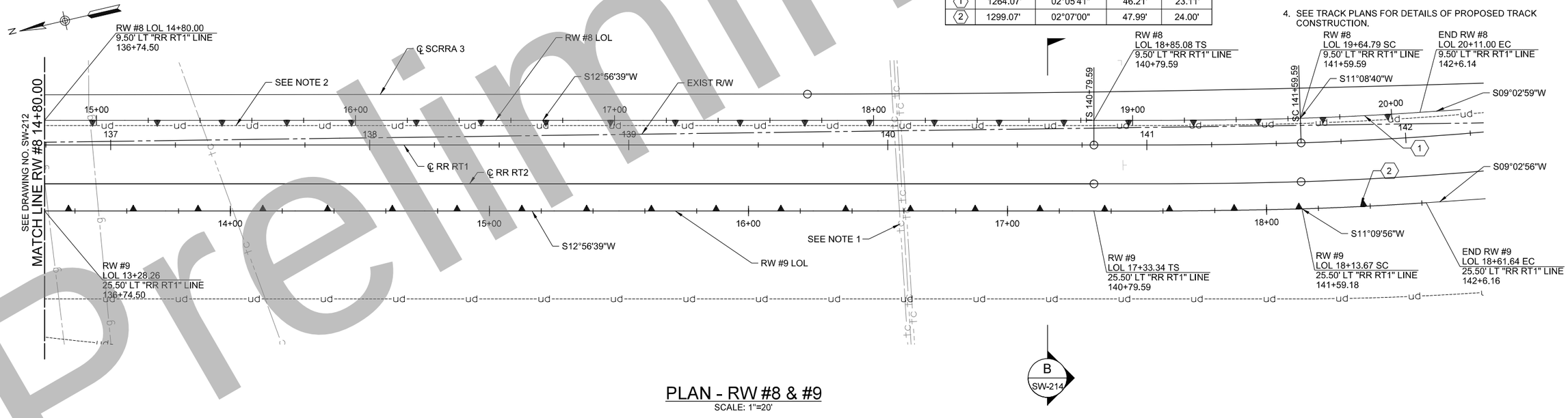

PLAN - RW #8 & #9

SCALE: 1"=20'

35% DESIGN PLANS
NOT FOR CONSTRUCTION

Original plan submittal made in Aug. 2019

THE PREPARATION OF THIS DRAWING HAS BEEN FINANCED IN PART THROUGH A GRANT FROM THE U.S. DEPARTMENT OF TRANSPORTATION, FEDERAL TRANSIT ADMINISTRATION (FTA), UNDER THE FEDERAL TRANSIT ACT OF 1964, AS AMENDED, AND IN PART BY THE TAXES OF THE CITIZENS OF LOS ANGELES COUNTY AND OF THE STATE OF CALIFORNIA.

Rev No.	Date	Description
1	3/21	Updated to reflect modified Ret Wall 9 design
2	12/21	
3	6/22	

DESIGNED BY L. LIU
DRAWN BY G. WEI
CHECKED BY P. ZHANG
IN CHARGE T. KIM
DATE 3/05/2021

REGISTERED PROFESSIONAL ENGINEER — No. Exp. CIVIL — STATE OF CALIFORNIA

Metro

LOS ANGELES COUNTY
METROPOLITAN TRANSPORTATION AUTHORITY

IDC CONSULTING ENGINEERS
300 S HARBOR BLVD.
SUITE 710
ANAHEIM, CA 92805
(714) 520-9070

HDR ENGINEERING
350 S. GRAND AVENUE
SUITE 2500
LOS ANGELES, CA 90071
(213) 239-5800

SUBMITTED: _____ PROJECT MANAGER

APPROVED: _____

LINK UNION STATION PROJECT

OFFSITE STRUCTURES
RW #8 & #9
PLAN LAYOUT 2 OF 2

CONTRACT NO

DRAWING NO SW-213 | REV

SCALE 1" =20'

SHEET NO 64

Preliminary

Plot Driver=SCRIP-11X17bw_pdf.pltcfg Pentable=PlotStamp.tbl USER = Gary 8:50:57 AM 5/13/2020 c:\pwworking\sac\d1005007\LUS-SW213-PL.dgn

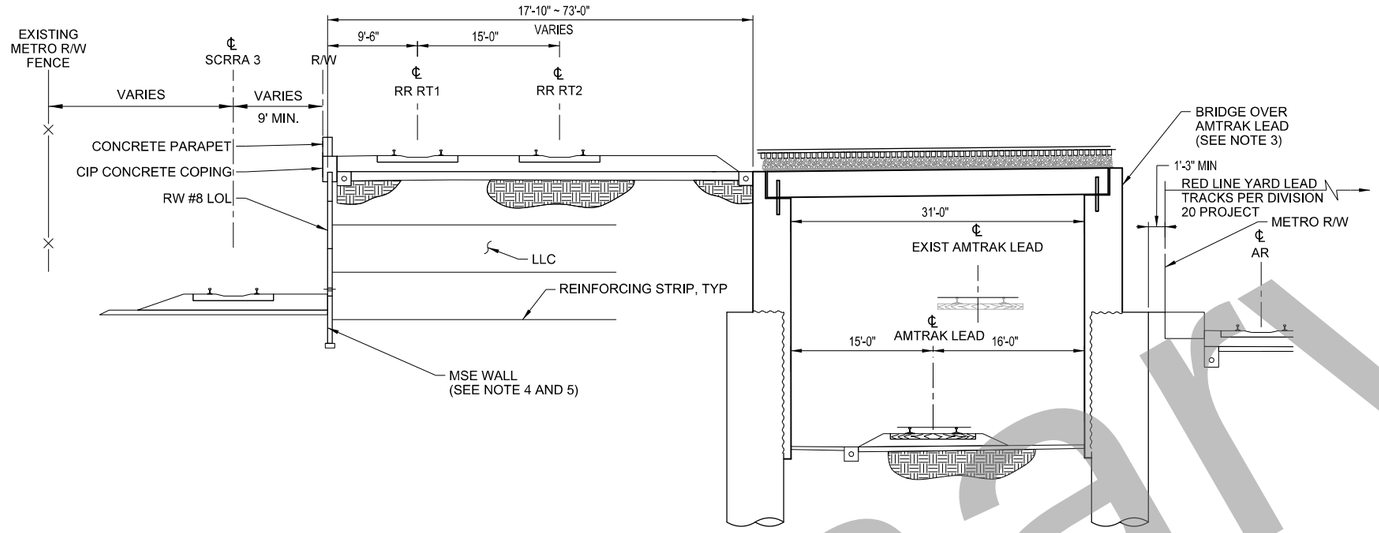

SECTION - RW #8 (A / SW-212)

NO SCALE
(RW #8 LOL 10+20.00~14+87.00)

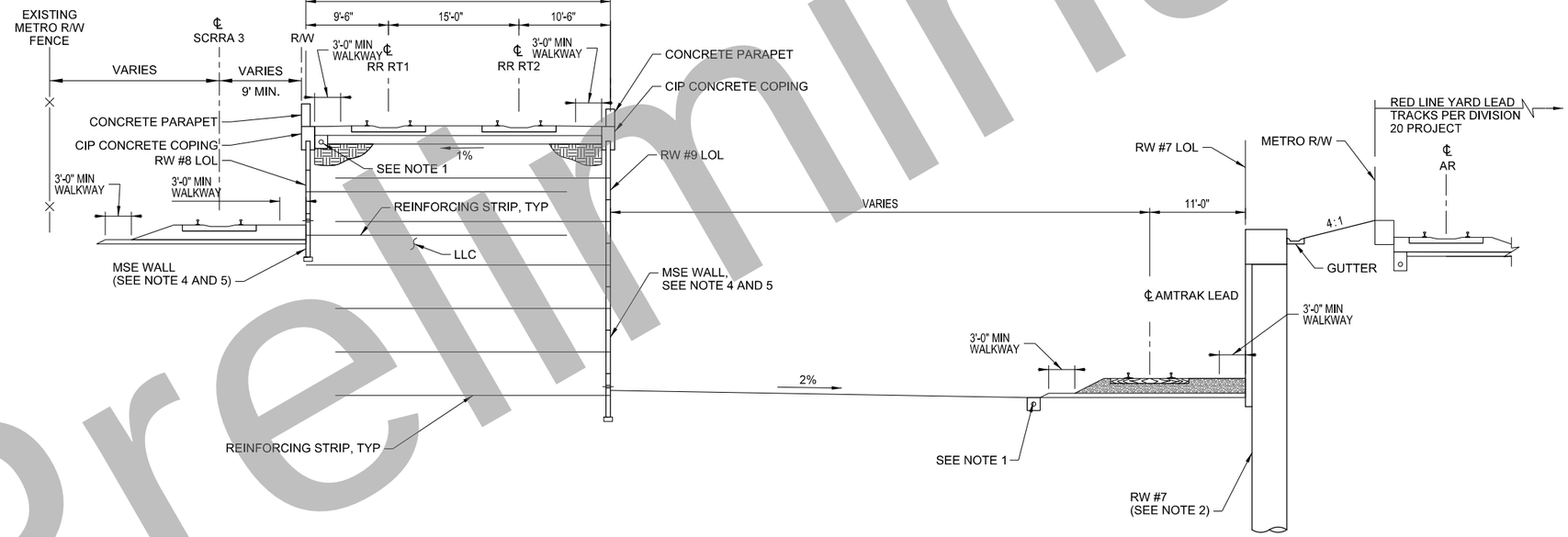

SECTION - RW #7, #8 & #9 (B / SW-211) (B / SW-213)

NO SCALE
(RW #8 LOL 14+87.00~20+11.00
RW #9 LOL 10+00~15+29.21)

NOTES:

1. SEE DRANAGE PLANS FOR UNDERDRAIN DETAILS.
2. RW #7 CIDH PILE SECANT WALL:

   STA 10+00.00~12+50.79 4'-0" Ø CIDH PILE WITH 2'-0" PRIMARY PILE;

   STA 1250.79~14+22.02 3'-0" Ø CIDH PILE WITH 2'-0" PRIMARY PILE.
3. BRIDGE OVER AMTRAK LEAD SEE SB-301~SB306
4. MSE WALL SYSTEM SHOWN AS PROPOSED RW TYPE. MSE WALL DETAILS WILL BE DESIGNED BY MSE WALL SUPPLIER.
5. THE LLC WALL TYPE TO BE FINALIZED DURING THE NEXT DESIGN PHASE, AFTER THE COMPLETION OF SOIL BORINGS AND GEOTECHNICAL REPORT.
6. RW #8 STA 10+00.00~10+60.00 IS COUNTERFORT WALL NOT SHOWN, SEE SB-302.
7. SEE TRACK PLANS FOR DETAILS OF PROPOSED TRACK CONSTRUCTION.

Preliminary

35% DESIGN PLANS
NOT FOR CONSTRUCTION

Original plan submittal made in Aug. 2019

THE PREPARATION OF THIS DRAWING HAS BEEN FINANCED IN PART THROUGH A GRANT FROM THE U.S. DEPARTMENT OF TRANSPORTATION, FEDERAL TRANSIT ADMINISTRATION (FTA), UNDER THE FEDERAL TRANSIT ACT OF 1964, AS AMENDED, AND IN PART BY THE TAXES OF THE CITIZENS OF LOS ANGELES COUNTY AND OF THE STATE OF CALIFORNIA.

Rev No.	Date	Description
1	3/21	Updated to reflect modified Ret Wall 9 design
2	12/21	
3	6/22	

DESIGNED BY L. LIU
DRAWN BY G. WEI
CHECKED BY P. ZHANG
IN CHARGE T. KIM
DATE 3/05/2021

REGISTERED PROFESSIONAL ENGINEER — No. ____ Exp. ____ CIVIL — STATE OF CALIFORNIA

Metro
LOS ANGELES COUNTY
METROPOLITAN TRANSPORTATION AUTHORITY

IDC CONSULTING ENGINEERS
306 S. HARBOR BLVD.
SUITE 201
ANAHEIM, CA 92805
(714) 520-0370

HDR ENGINEERING
350 S. GRAND AVENUE
SUITE 2600
LOS ANGELES, CA 90071
(213) 239-5800

SUBMITTED: _____ PROJECT MANAGER
APPROVED: _____

LINK UNION STATION PROJECT
OFFSITE STRUCTURES
RW #7, #8 & #9
TYPICAL SECTION

CONTRACT NO
DRAWING NO SW-214 REV
SCALE NO SCALE
SHEET NO 65

Plot Driver=SCRIP-11X17bw_pdf.pltcfg Pentable=PlotStamp.tbl USER = Gary 8:51:08 AM 5/13/2020 c:\pwworking\sac\d1005007\LUS-SW214-TS.dgn

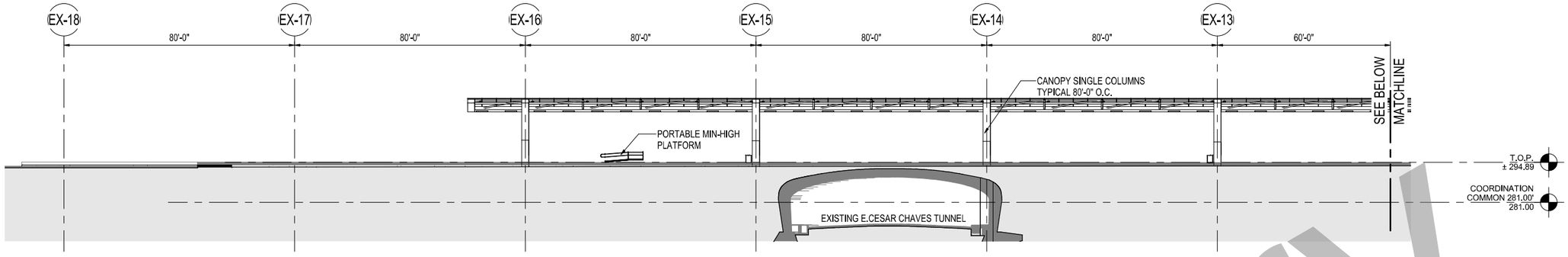

1 A-300 PLATFORM OVERALL SECTION - NORTH
1" = 20'-0"

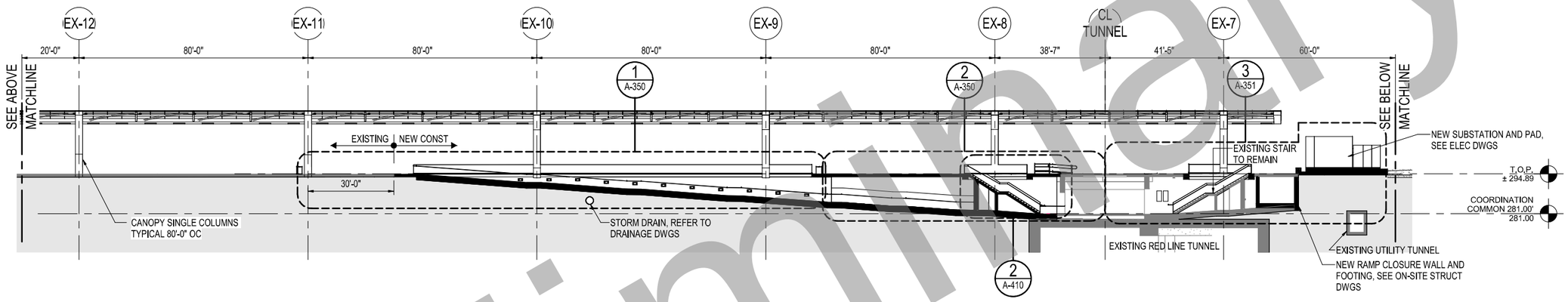

2 A-300 PLATFORM OVERALL SECTION - CENTER
1" = 20'-0"

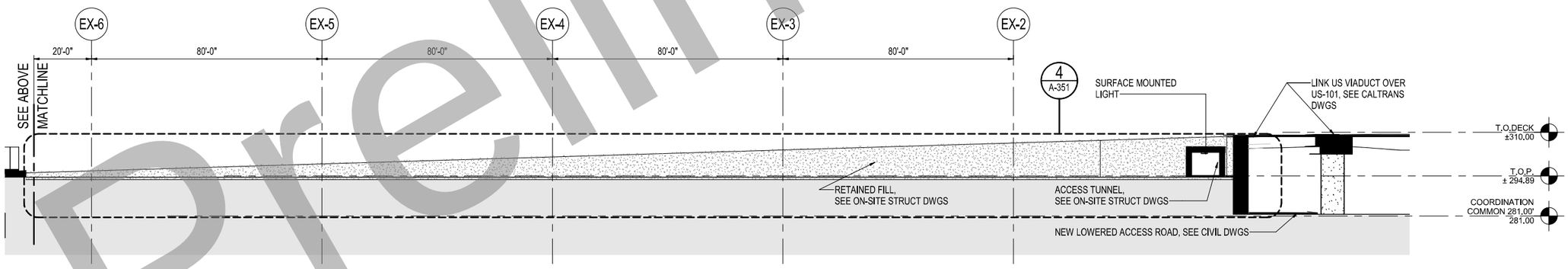

3 A-300 PLATFORM OVERALL SECTION - SOUTH
1" = 20'-0"

GENERAL NOTES

1. EXISTING PASSENGER TUNNEL TO REMAIN IN SERVICE. CONTRACTOR TO PROVIDE PEDESTRIAN PROTECTION AGAINST ANY AND ALL HAZARDS. PEDESTRIAN PROTECTION SHALL CONFORM TO ALL REGULATIONS.
2. FOR LEVEL DATUMS, SEE CIVIL DRAWINGS.
3. LIGHTING, WAYFINDING AND SIGNAGE SHALL BE MOUNTED TO CANOPY ROOF.
4. NO ACCESS TO PLATFORM 4 DURING CONSTRUCTION.
5. PROVIDE DETECTABLE WARNING TILE ON EACH SIDE OF PLATFORM AND ON EACH EDGE CONDITION OF DESIGNATED SUBSTATION AREA.

GRAPHICS LEGEND

- EXISTING STRUCTURE
- PROPOSED STRUCTURE
- EARTH

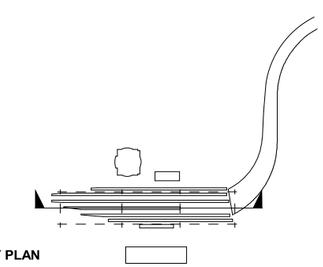

KEY PLAN

35% DESIGN PLANS
NOT FOR CONSTRUCTION

Preliminary

Original plan submittal made in Aug. 2019

THE PREPARATION OF THIS DRAWING HAS BEEN FINANCED IN PART THROUGH A GRANT FROM THE U.S. DEPARTMENT OF TRANSPORTATION, FEDERAL TRANSIT ADMINISTRATION (fta), UNDER THE FEDERAL TRANSIT ACT OF 1964, AS AMENDED, AND IN PART BY THE TAXES OF THE CITIZENS OF LOS ANGELES COUNTY AND OF THE STATE OF CALIFORNIA

Rev No.	Date	Description
1	3/21	Plan added to set
2	12/21	
3	6/22	

DESIGNED BY: M. MAH
DRAWN BY: M. PERROS
CHECKED BY: M. RAMIREZ
IN CHARGE: T. KIM
DATE: 3/05/2021

Metro
LOS ANGELES COUNTY
METROPOLITAN TRANSPORTATION AUTHORITY

V&A, INC.
975 S. FAIR OAKS AVENUE
PASADENA, CA 91105
(213) 972-6700

HDR ENGINEERING
350 S GRAND AVENUE
SUITE 2900
LOS ANGELES, CA 90071
(213) 239-6800

SUBMITTED: _____ PROJECT MANAGER
APPROVED: _____

LINK UNION STATION PROJECT
ARCHITECTURAL DRAWINGS
PLATFORM 4 OVERALL SECTIONS

CONTRACT NO.
DRAWING NO. A-300
REV. 0
SCALE 1" = 20'-0"
SHEET NO. 66

5/12/2020 11:29:46 AM C:\rv02017\A-LUS-202-CONTAINER_PHASE_A-R17_MPERROS.rvt

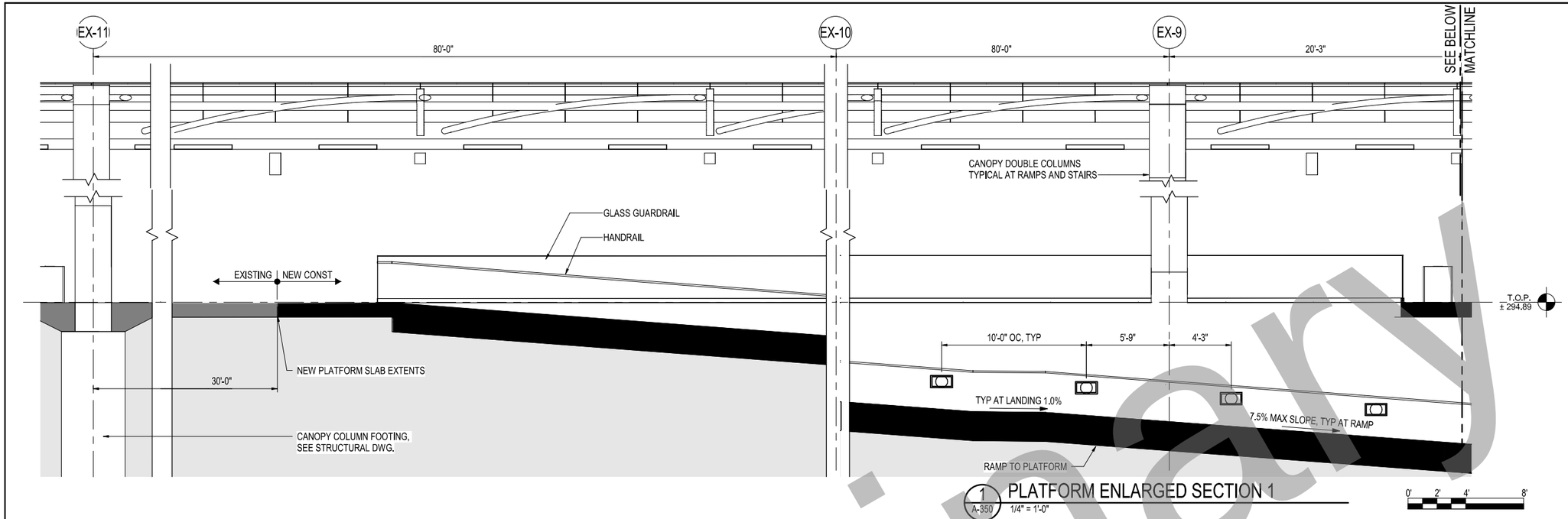

1 A-350 PLATFORM ENLARGED SECTION 1
1/4" = 1'-0"

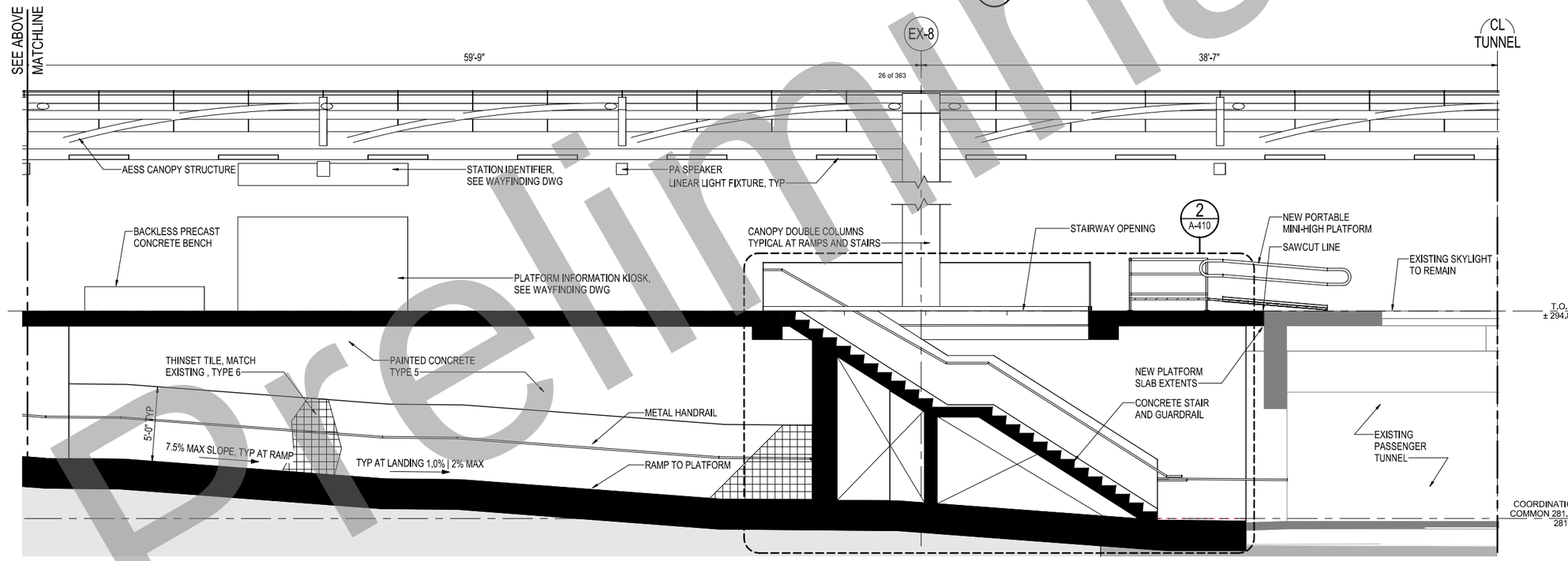

2 A-350 PLATFORM ENLARGED SECTION 2
1/4" = 1'-0"

GENERAL NOTES

1. EXISTING PASSENGER TUNNEL TO REMAIN IN SERVICE. CONTRACTOR TO PROVIDE PEDESTRIAN PROTECTION AGAINST ANY AND ALL HAZARDS. PEDESTRIAN PROTECTION SHALL CONFORM TO ALL REGULATIONS.
2. FOR LEVEL DATUMS, SEE CIVIL DRAWINGS.
3. LIGHTING, WAYFINDING AND SIGNAGE SHALL BE MOUNTED TO CANOPY ROOF.
4. NO ACCESS TO PLATFORM 4 DURING CONSTRUCTION.
5. PROVIDE DETECTABLE WARNING TILE ON EACH SIDE OF PLATFORM AND ON EACH EDGE CONDITION OF DESIGNATED SUBSTATION AREA.

GRAPHICS LEGEND

- EXISTING STRUCTURE
- PROPOSED STRUCTURE
- EARTH
- (E) SKYLIGHT

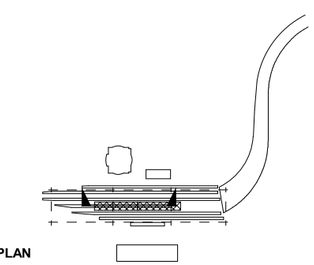

KEY PLAN

35% DESIGN PLANS
NOT FOR CONSTRUCTION

Preliminary

Original plan submittal made in Aug. 2019

THE PREPARATION OF THIS DRAWING HAS BEEN FINANCED IN PART THROUGH A GRANT FROM THE U.S. DEPARTMENT OF TRANSPORTATION, FEDERAL TRANSIT ADMINISTRATION (fta), UNDER THE FEDERAL TRANSIT ACT OF 1964, AS AMENDED, AND IN PART BY THE TAXES OF THE CITIZENS OF LOS ANGELES COUNTY AND OF THE STATE OF CALIFORNIA

Rev No.	Date	Description
1	3/21	Plan sheet replaced
2	12/21	
3	6/22	

DESIGNED BY M. MAH
DRAWN BY M. PERROS
CHECKED BY M. RAMIREZ
IN CHARGE T. KIM
DATE 3/05/2021

Metro
LOS ANGELES COUNTY METROPOLITAN TRANSPORTATION AUTHORITY
V&A, INC. 975 S. FAIR OAKS AVENUE PASADENA, CA 91105 (213) 972-6700
HDR ENGINEERING 350 S GRAND AVENUE SUITE 2900 LOS ANGELES, CA 90071 (213) 239-6800

SUBMITTED: _____ PROJECT MANAGER
APPROVED: _____

LINK UNION STATION PROJECT
ARCHITECTURAL DRAWINGS
PLATFORM 4 SECTIONS SHEET 1 OF 4

CONTRACT NO.
DRAWING NO. A-350
REV. 0
SCALE 1/4" = 1'-0"
SHEET NO. 67

C:\rvt\2017\A-LUS-202-CONTAINER_PHASE_A-R17_MPERROS.rvt
5/12/2020 11:29:59 AM

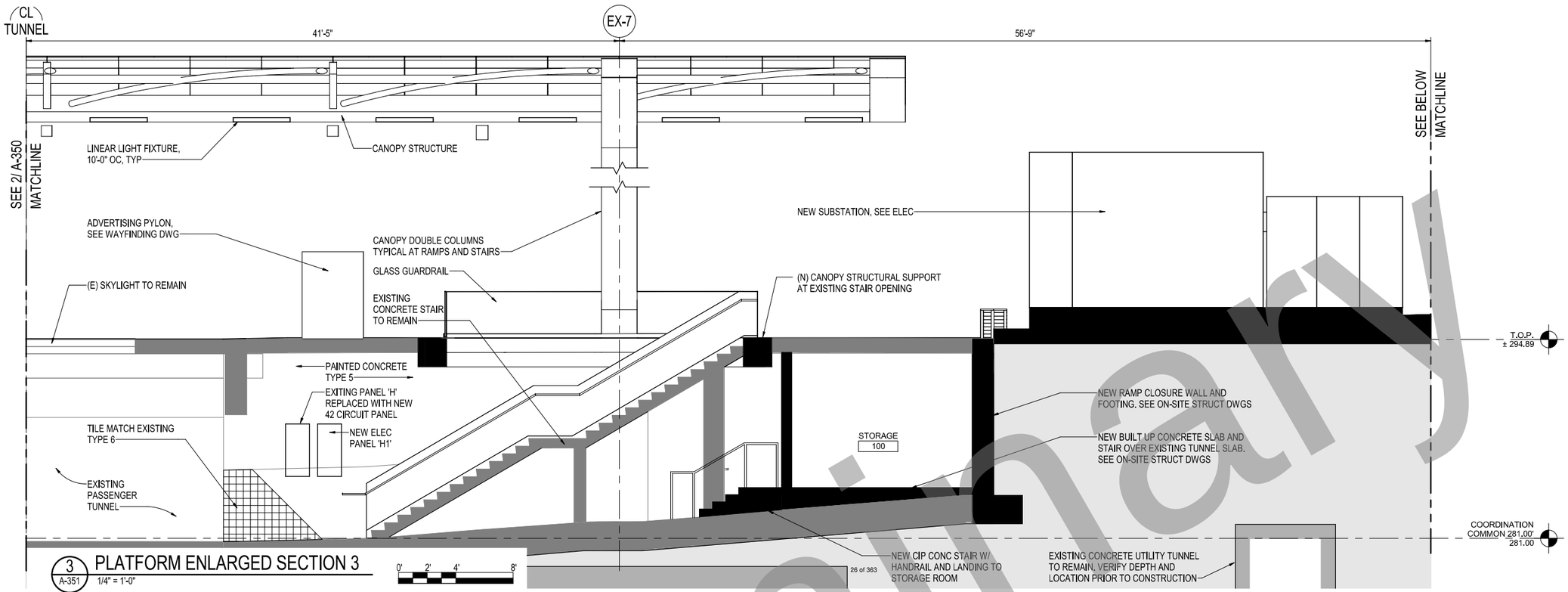

3 A-351 PLATFORM ENLARGED SECTION 3
1/4" = 1'-0"

0' 2' 4' 8'

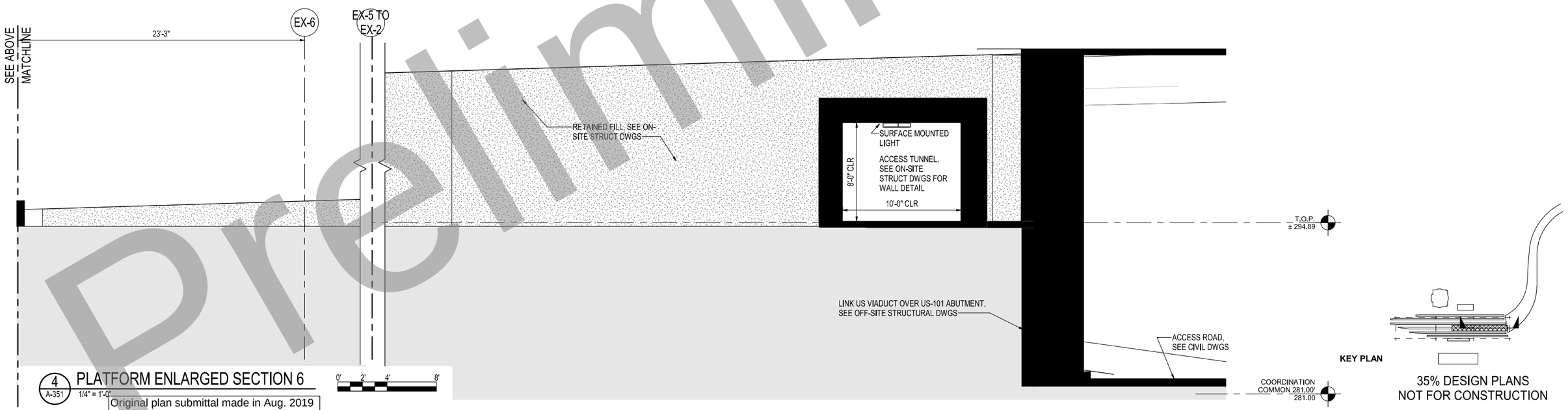

4 A-351 PLATFORM ENLARGED SECTION 6
1/4" = 1'-0"

0' 2' 4' 8'

Original plan submittal made in Aug. 2019

GENERAL NOTES

1. EXISTING PASSENGER TUNNEL TO REMAIN IN SERVICE. CONTRACTOR TO PROVIDE PEDESTRIAN PROTECTION AGAINST ANY AND ALL HAZARDS. PEDESTRIAN PROTECTION SHALL CONFORM TO ALL REGULATIONS.
2. FOR LEVEL DATUMS, SEE CIVIL DRAWINGS.
3. LIGHTING, WAYFINDING AND SIGNAGE SHALL BE MOUNTED TO CANOPY ROOF.
4. NO ACCESS TO PLATFORM 4 DURING CONSTRUCTION.
5. PROVIDE DETECTABLE WARNING TILE ON EACH SIDE OF PLATFORM AND ON EACH EDGE CONDITION OF DESIGNATED SUBSTATION AREA.

GRAPHICS LEGEND

- EXISTING STRUCTURE
- PROPOSED STRUCTURE
- EARTH
- (E) SKYLIGHT

KEY PLAN

35% DESIGN PLANS
NOT FOR CONSTRUCTION

Preliminary

THE PREPARATION OF THIS DRAWING HAS BEEN FINANCED IN PART THROUGH A GRANT FROM THE U.S. DEPARTMENT OF TRANSPORTATION, FEDERAL TRANSIT ADMINISTRATION (fta), UNDER THE FEDERAL TRANSIT ACT OF 1964, AS AMENDED, AND IN PART BY THE TAXES OF THE CITIZENS OF LOS ANGELES COUNTY AND OF THE STATE OF CALIFORNIA

Rev No.	Date	Description
1	3/21	Plan sheet replaced
2	12/21	
3	6/22	

DESIGNED BY M. MAH
DRAWN BY M. PERROS
CHECKED BY M. RAMIREZ
IN CHARGE T. KIM
DATE 3/05/2021

Metro
LOS ANGELES COUNTY METROPOLITAN TRANSPORTATION AUTHORITY

V&A, INC.
875 S. FAIR OAKS AVENUE
PASADENA, CA 91105
(213) 972-0700

HDR ENGINEERING
350 S GRAND AVENUE
SUITE 2900
LOS ANGELES, CA 90071
(213) 239-6800

SUBMITTED: _____ PROJECT MANAGER
APPROVED: _____

LINK UNION STATION PROJECT
ARCHITECTURAL DRAWINGS
PLATFORM 4 SECTIONS SHEET 2 OF 4

CONTRACT NO.
DRAWING NO. A-351
REV. 0
SCALE 1/4" = 1'-0"
SHEET NO. 68

C:\rvt\2017\ALL\S-2\2\2-CONTAINER_PHASE_A-417_A.RVT 5/12/2020 11:30:09 AM

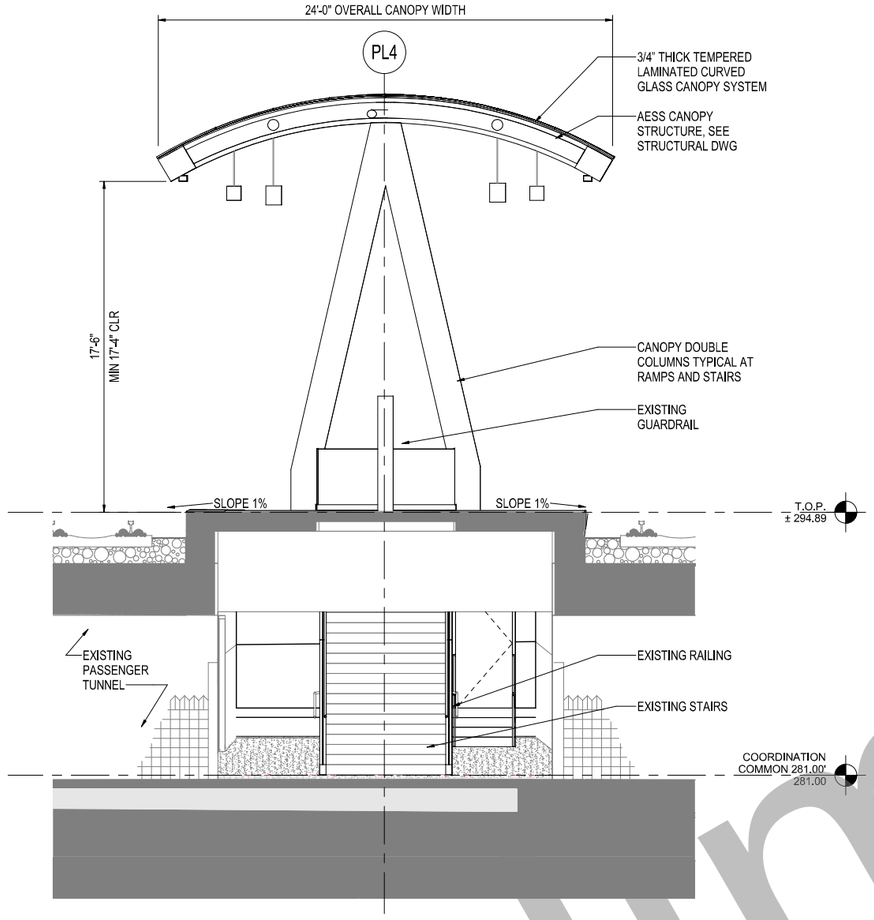

2 A-352 PASSAGEWAY SECTION/SOUTH ELEVATION
1/4" = 1'-0"

0' 2' 4' 8'

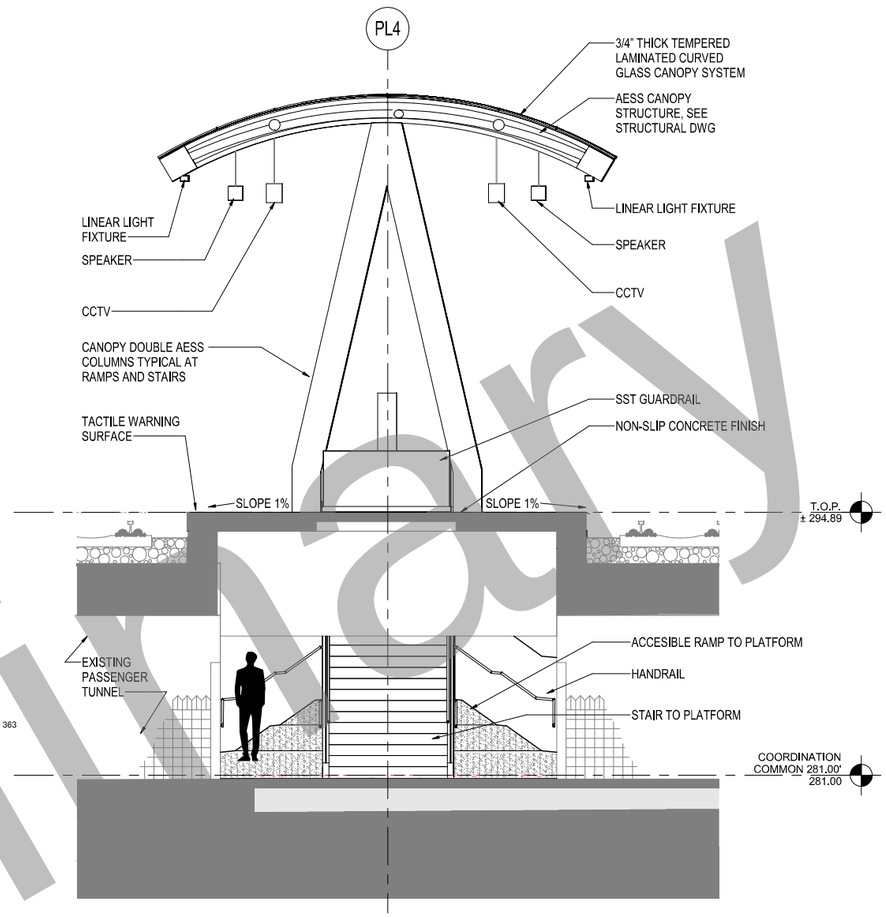

1 A-352 PASSAGEWAY SECTION/NORTH ELEVATION
1/4" = 1'-0"

0' 2' 4' 8'

GENERAL NOTES

1. EXISTING PASSENGER TUNNEL TO REMAIN IN SERVICE. CONTRACTOR TO PROVIDE PEDESTRIAN PROTECTION AGAINST ANY AND ALL HAZARDS. PEDESTRIAN PROTECTION SHALL CONFORM TO ALL REGULATIONS.
2. FOR LEVEL DATUMS, SEE CIVIL DRAWINGS.
3. LIGHTING, WAYFINDING AND SIGNAGE SHALL BE MOUNTED TO CANOPY ROOF.
4. NO ACCESS TO PLATFORM 4 DURING CONSTRUCTION.
5. PROVIDE DETECTABLE WARNING TILE ON EACH SIDE OF PLATFORM AND ON EACH EDGE CONDITION OF DESIGNATED SUBSTATION AREA.

GRAPHICS LEGEND

- EXISTING STRUCTURE
- PROPOSED STRUCTURE
- EARTH
- STRUCTURE BELOW
- STRUCTURE ABOVE

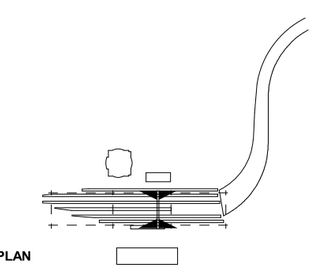

KEY PLAN

35% DESIGN PLANS
NOT FOR CONSTRUCTION

Preliminary

Original plan submittal made in Aug. 2019

THE PREPARATION OF THIS DRAWING HAS BEEN FINANCED IN PART THROUGH A GRANT FROM THE U.S. DEPARTMENT OF TRANSPORTATION, FEDERAL TRANSIT ADMINISTRATION (fta), UNDER THE FEDERAL TRANSIT ACT OF 1964, AS AMENDED, AND IN PART BY THE TAXES OF THE CITIZENS OF LOS ANGELES COUNTY AND OF THE STATE OF CALIFORNIA

Rev No.	Date	Description
1	3/21	Plan sheet replaced
2	12/21	
3	6/22	

DESIGNED BY M. MAH
DRAWN BY M. PERROS
CHECKED BY M. RAMIREZ
IN CHARGE T. KIM
DATE 3/05/2021

Metro
LOS ANGELES COUNTY METROPOLITAN TRANSPORTATION AUTHORITY

V&A, INC. 975 S. FAIR OAKS AVENUE PASADENA, CA 91105 (213) 972-9700

HDR ENGINEERING 350 S GRAND AVENUE SUITE 2900 LOS ANGELES, CA 90071 (213) 239-6800

SUBMITTED: _____ PROJECT MANAGER
APPROVED: _____

LINK UNION STATION PROJECT
ARCHITECTURAL DRAWINGS
PLATFORM 4 SECTIONS SHEET 3 OF 4

CONTRACT NO.
DRAWING NO. A-352
REV. 0
SCALE 1/4" = 1'-0"
SHEET NO. 69

5/12/2020 11:30:15 AM C:\rvt\2017\A-LUS-202-CONTAINER_PHASE_A-R17_MPERROS.rvt

GENERAL NOTES

1. EXISTING PASSENGER TUNNEL TO REMAIN IN SERVICE. CONTRACTOR TO PROVIDE PEDESTRIAN PROTECTION AGAINST ANY AND ALL HAZARDS. PEDESTRIAN PROTECTION SHALL CONFORM TO ALL REGULATIONS.
2. FOR LEVEL DATUMS, SEE CIVIL DRAWINGS.
3. LIGHTING, WAYFINDING AND SIGNAGE SHALL BE MOUNTED TO CANOPY ROOF.
4. NO ACCESS TO PLATFORM 4 DURING CONSTRUCTION.
5. PROVIDE DETECTABLE WARNING TILE ON EACH SIDE OF PLATFORM AND ON EACH EDGE CONDITION OF DESIGNATED SUBSTATION AREA.

GRAPHICS LEGEND

- EXISTING STRUCTURE
- PROPOSED STRUCTURE
- EARTH
- STRUCTURE BELOW
- STRUCTURE ABOVE

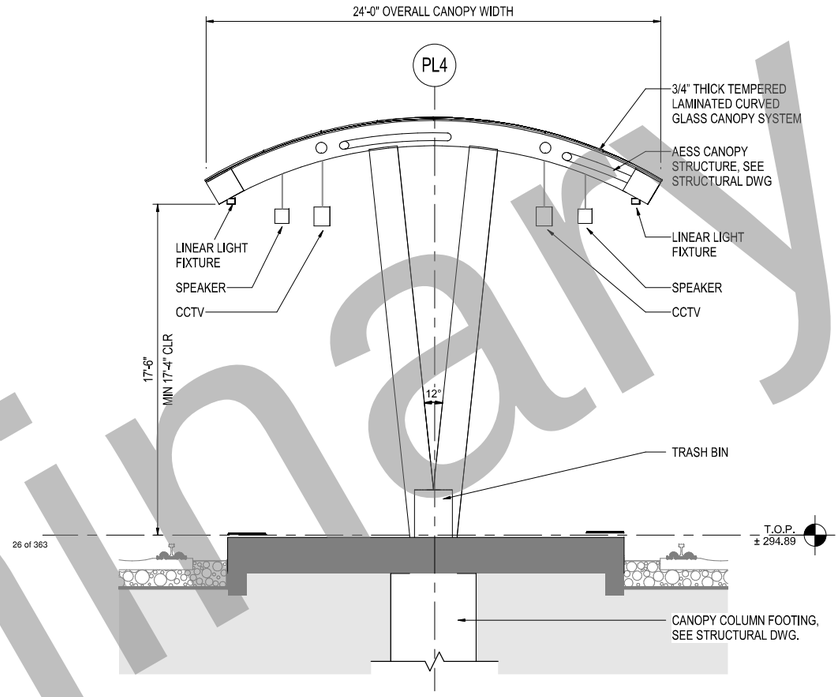

1 A-353 CANOPY SECTION/SOUTH ELEVATION
1/4" = 1'-0"

0' 2' 4' 8'

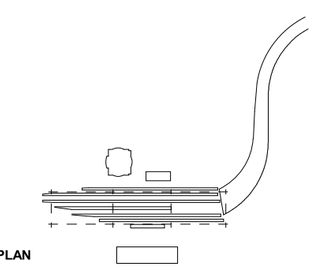

KEY PLAN

35% DESIGN PLANS
NOT FOR CONSTRUCTION

Preliminary

Original plan submittal made in Aug. 2019

THE PREPARATION OF THIS DRAWING HAS BEEN FINANCED IN PART THROUGH A GRANT FROM THE U.S. DEPARTMENT OF TRANSPORTATION, FEDERAL TRANSIT ADMINISTRATION (fta), UNDER THE FEDERAL TRANSIT ACT OF 1964, AS AMENDED, AND IN PART BY THE TAXES OF THE CITIZENS OF LOS ANGELES COUNTY AND OF THE STATE OF CALIFORNIA

Rev No.	Date	Description
1	3/21	Plan added to set
2	12/21	
3	6/22	

DESIGNED BY M. MAH
DRAWN BY M. PERROS
CHECKED BY M. RAMIREZ
IN CHARGE T. KIM
DATE 3/05/2021

Metro
LOS ANGELES COUNTY METROPOLITAN TRANSPORTATION AUTHORITY

V&A, INC. 975 S. FAIR OAKS AVENUE PASADENA, CA 91105 (213) 972-8700

HDR ENGINEERING 350 S GRAND AVENUE SUITE 2900 LOS ANGELES, CA 90071 (213) 239-6800

SUBMITTED: _____ PROJECT MANAGER
APPROVED: _____

LINK UNION STATION PROJECT
ARCHITECTURAL DRAWINGS
PLATFORM 4 SECTIONS SHEET 4 OF 4

CONTRACT NO.
DRAWING NO. A-353
REV. 0
SCALE 1/4" = 1'-0"
SHEET NO. 70

5/12/2020 11:30:19 AM C:\rv\2017\A-LUS-202-CONTAINER_PHASE_A-R17_MPERROS.rvt

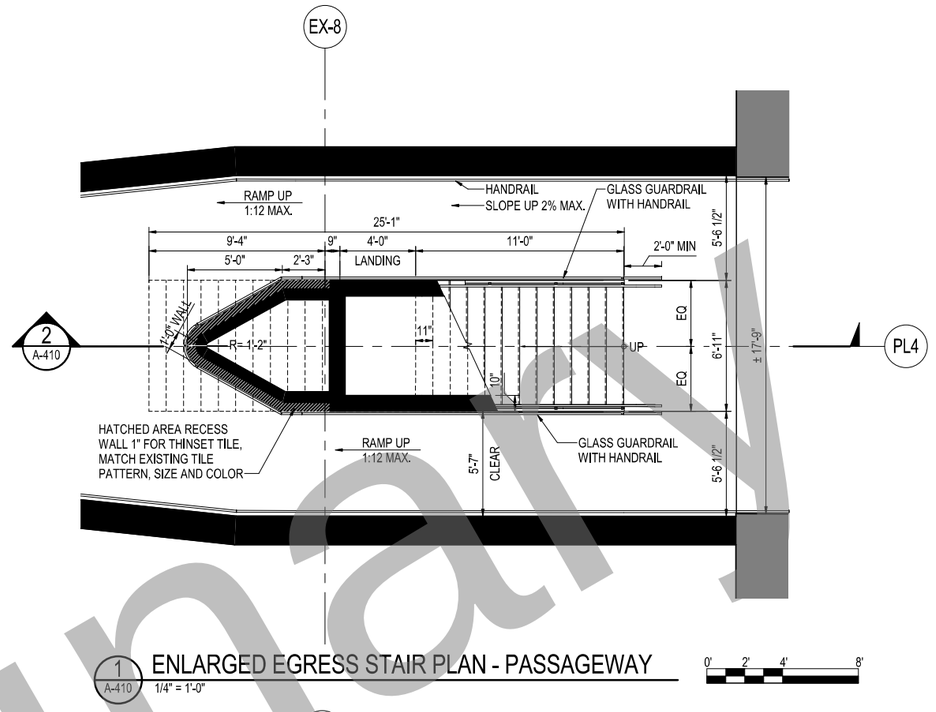

1 A-410 ENLARGED EGRESS STAIR PLAN - PASSAGEWAY
1/4" = 1'-0"

0' 2' 4' 8'

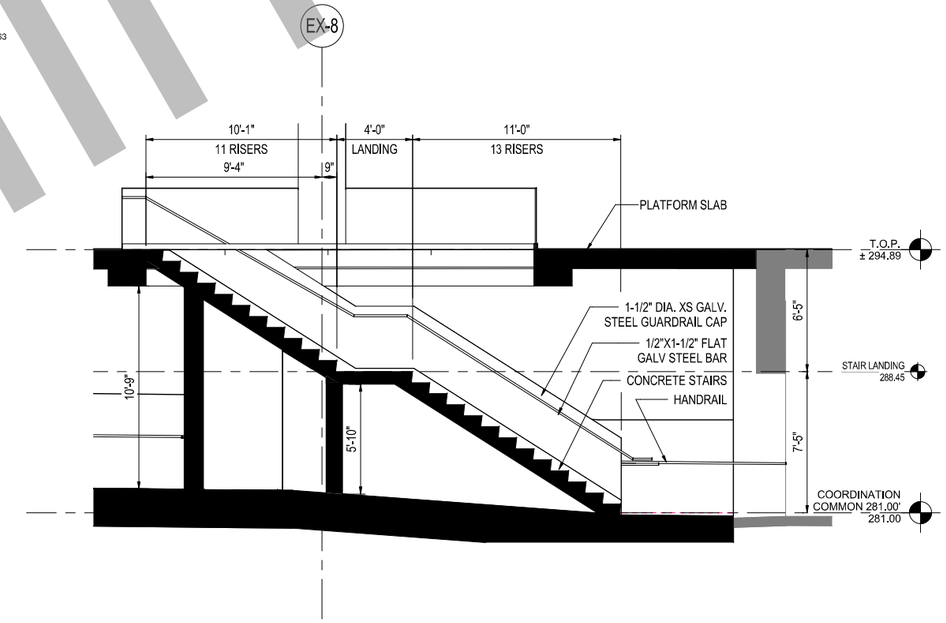

2 A-410 ENLARGED EGRESS STAIR SECTION
1/4" = 1'-0"

0' 2' 4' 8'

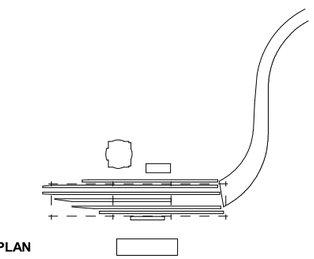

KEY PLAN

35% DESIGN PLANS
NOT FOR CONSTRUCTION

Preliminary

Original plan submittal made in Aug. 2019

Rev No.	Date	Description
1	3/21	Plan added to set
2	12/21	
3	6/22	

THE PREPARATION OF THIS DRAWING HAS BEEN FINANCED IN PART THROUGH A GRANT FROM THE U.S. DEPARTMENT OF TRANSPORTATION, FEDERAL TRANSIT ADMINISTRATION (fta), UNDER THE FEDERAL TRANSIT ACT OF 1964, AS AMENDED, AND IN PART BY THE TAXES OF THE CITIZENS OF LOS ANGELES COUNTY AND OF THE STATE OF CALIFORNIA

DESIGNED BY M. MAH
DRAWN BY M. PERROS
CHECKED BY M. RAMIREZ
IN CHARGE T. KIM
DATE 3/05/2021

Metro
LOS ANGELES COUNTY
METROPOLITAN TRANSPORTATION AUTHORITY

V&A, INC.
975 S. FAIR OAKS AVENUE
PASADENA, CA 91105
(213) 972-6700

HDR ENGINEERING
350 S GRAND AVENUE
SUITE 2900
LOS ANGELES, CA 90071
(213) 228-6800

SUBMITTED: _____ PROJECT MANAGER

APPROVED: _____

LINK UNION STATION PROJECT
ARCHITECTURAL DRAWINGS

ENLARGED EGRESS STAIR PLAN AND SECTION

CONTRACT NO.

DRAWING NO. A-410 REV. 0

SCALE 1/4" = 1'-0"

SHEET NO. 71

5/12/2020 11:30:24 AM C:\n\2021\Acad\US\2021CONTAINER_PHASE_II\A71_ARTERROR.rvt

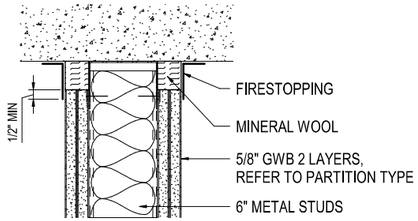

DESIGN BASIS:
UL-HW-D-0044
CONCRETE SLAB

1 A-450 PARTITION HEAD DETAIL - FIRE RATED
3" = 1'-0"

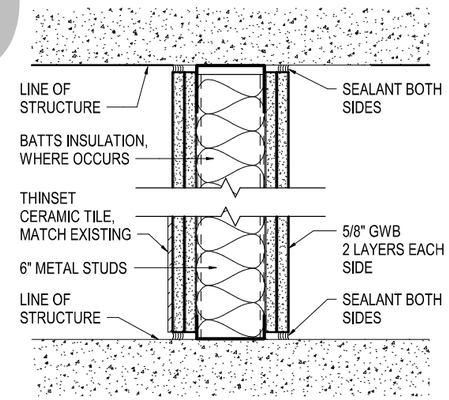

(TYPE B) PARTITION			
NOTE: FIRE RESISTANCE TEST FOR TWO HOUR RATED WALLS: UL V438, UL U411			
MARK	STUD WIDTH	PRTN WIDTH	DESIGN STC
A	6"	8"	N/A

2 A-450 STORAGE ROOM PARTITION TYPE B
3" = 1'-0"

26 of 363

ROOM FINISH SCHEDULE

ROOM NUMBER	ROOM NAME	OCCUPANCY	WALL FINISH				FLOOR FINISH	CEILING FINISH	COMMENTS
			N	E	S	W			
100	STORAGE	S2	GYP BD	-	-	-	CONC	-	
101	PLATFORM ENTRY NORTH	-	-	PAINT/ TILE	-	PAINT/ TILE	CONC, NONSLIP FINISH	-	TILE TO MATCH EXISTING PAINT COLOR: OFF-WHITE
102	PLATFORM ENTRY SOUTH	-	-	PAINT/ TILE	PAINT/ TILE	PAINT/ TILE	CONC, NONSLIP FINISH	-	TILE TO MATCH EXISTING PAINT COLOR: OFF-WHITE

DOOR SCHEDULE

Type Mark	DIMENSIONS			PANEL		FRAME		FIRE RATING
	W	H	T	Material	Finish	Material	Finish	
B	3'-0"	7'-0"	1 3/4"	HM	PTD	HM	PTD	90 MIN

Preliminary

35% DESIGN PLANS
NOT FOR CONSTRUCTION

Original plan submittal made in Aug. 2019

THE PREPARATION OF THIS DRAWING HAS BEEN FINANCED IN PART THROUGH A GRANT FROM THE U.S. DEPARTMENT OF TRANSPORTATION, FEDERAL TRANSIT ADMINISTRATION (fta), UNDER THE FEDERAL TRANSIT ACT OF 1964, AS AMENDED, AND IN PART BY THE TAXES OF THE CITIZENS OF LOS ANGELES COUNTY AND OF THE STATE OF CALIFORNIA

Rev No.	Date	Description
1	3/21	Plan added to set
2	12/21	
3	6/22	

DESIGNED BY M. MAH
DRAWN BY M. PERROS
CHECKED BY M. RAMIREZ
IN CHARGE T. KIM
DATE 3/05/2021

Metro
LOS ANGELES COUNTY METROPOLITAN TRANSPORTATION AUTHORITY

V&A, INC. 975 S. FAIR OAKS AVENUE PASADENA, CA 91105 (213) 972-9700

HDR ENGINEERING 350 S GRAND AVENUE SUITE 2900 LOS ANGELES, CA 90071 (213) 239-6800

SUBMITTED: _____ PROJECT MANAGER
APPROVED: _____

LINK UNION STATION PROJECT
ARCHITECTURAL DRAWINGS
WALL SECTIONS, ROOM FINISH AND DOOR SCHEDULE

CONTRACT NO.
DRAWING NO. A-450
REV. 0
SCALE 3" = 1'-0"
SHEET NO. 72

5/12/2020 11:30:30 AM C:\rv\2017\A-LUS-202-CONTAINER_PHASE_A-R17_MPERROS.rvt

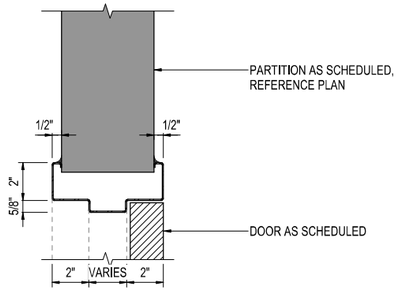

5 A-801 HEAD - HM DOOR
3" = 1'-0"

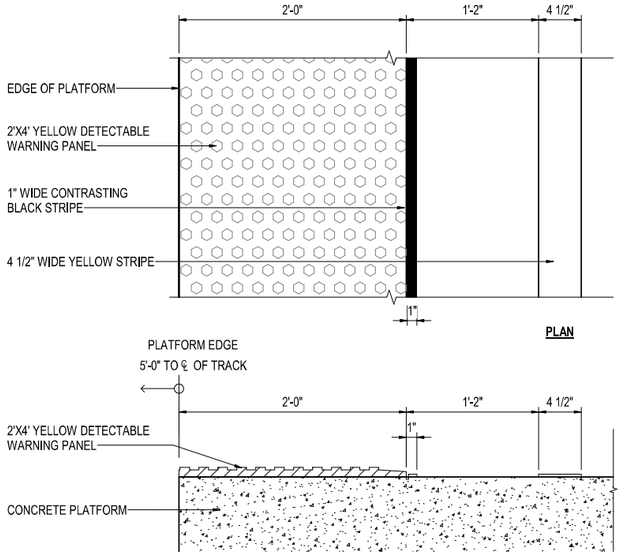

NOTE: SEE SCRRA STANDARD DWG ES3203-01 AND ES3203-02 FOR ADDITIONAL INFORMATION AND DETAILS

3 A-801 TACTILE WARNING SURFACE
1 1/2" = 1'-0"

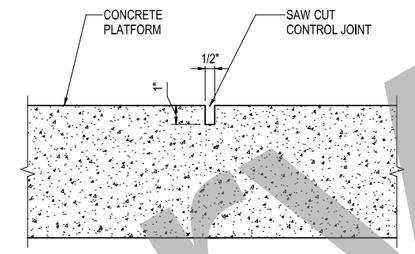

1 A-801 PLATFORM CONTROL JOINT
3" = 1'-0"

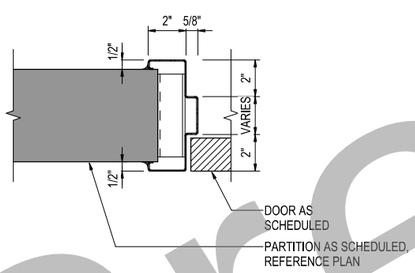

6 A-801 JAMB - HM DOOR
3" = 1'-0"

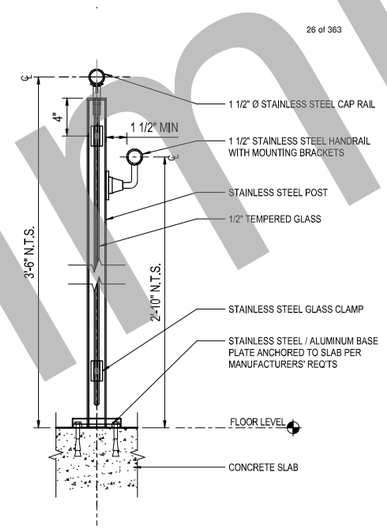

4 A-801 GLASS GUARDRAIL - SECTION
1 1/2" = 1'-0"

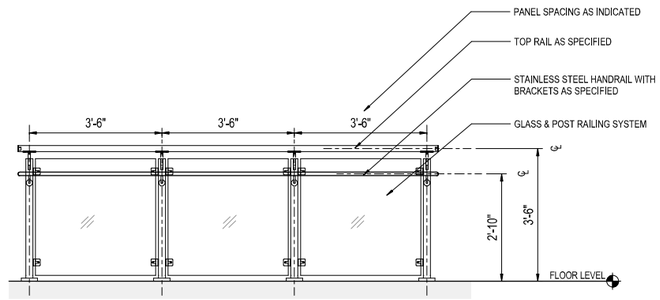

2 A-801 GLASS GUARDRAIL - ELEVATION
1/2" = 1'-0"

Original plan submittal made in Aug. 2019

35% DESIGN PLANS
NOT FOR CONSTRUCTION

Preliminary

THE PREPARATION OF THIS DRAWING HAS BEEN FINANCED IN PART THROUGH A GRANT FROM THE U.S. DEPARTMENT OF TRANSPORTATION, FEDERAL TRANSIT ADMINISTRATION (fta), UNDER THE FEDERAL TRANSIT ACT OF 1964, AS AMENDED, AND IN PART BY THE TAXES OF THE CITIZENS OF LOS ANGELES COUNTY AND OF THE STATE OF CALIFORNIA

Rev No.	Date	Description
1	3/21	Plan added to set
2	12/21	
3	6/22	

DESIGNED BY M. MAH
DRAWN BY M. PERROS
CHECKED BY M. RAMIREZ
IN CHARGE T. KIM
DATE 3/05/2021

Metro
LOS ANGELES COUNTY METROPOLITAN TRANSPORTATION AUTHORITY

V&A, INC.
975 S. FAIR OAKS AVENUE
PASADENA, CA 91105
(213) 972-9700

HDR ENGINEERING
350 S GRAND AVENUE
SUITE 2900
LOS ANGELES, CA 90071
(213) 239-6800

SUBMITTED: _____ PROJECT MANAGER
APPROVED: _____

LINK UNION STATION PROJECT
ARCHITECTURAL DRAWINGS

ARCHITECTURAL DETAILS

CONTRACT NO.
DRAWING NO. A-801
REV. 0
SCALE AS NOTED
SHEET NO. 73

5/12/2020 11:30:32 AM C:\HV2017\A-LUS-202-CONTAINER_PHASE_A-R17_MPERROS.rvt

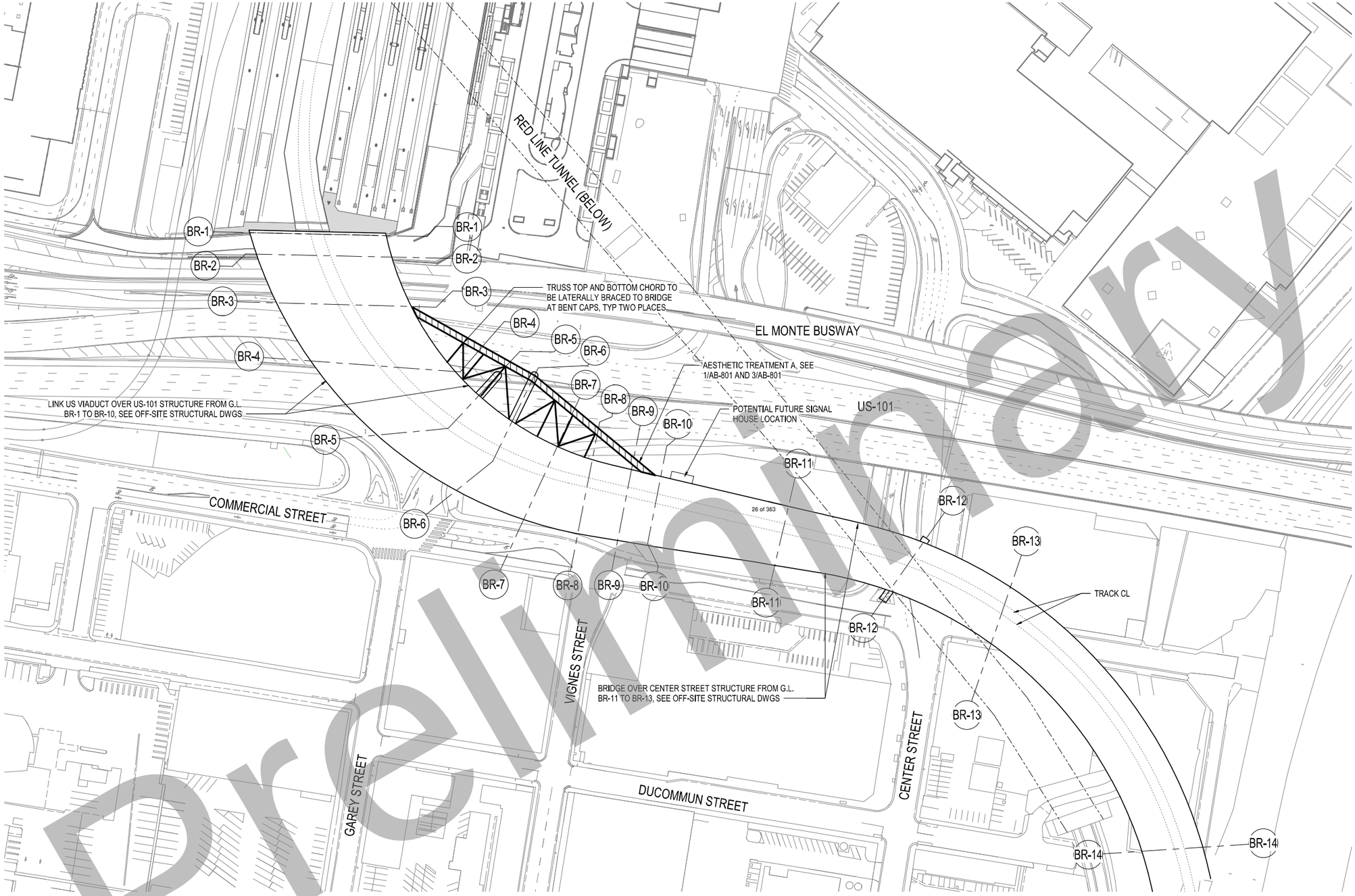

1 AB-100 LAUS VIADUCT OVER US-101 - GENERAL PLAN
1" = 80'-0"

0' 40' 80' 160'

GENERAL NOTES

1. EXISTING PASSENGER TUNNEL TO REMAIN IN SERVICE. CONTRACTOR TO PROVIDE PEDESTRIAN PROTECTION AGAINST ANY AND ALL HAZARDS. PEDESTRIAN PROTECTION SHALL CONFORM TO ALL REGULATIONS.
2. FOR LEVEL DATUMS, SEE CIVIL DRAWINGS.
3. FOR DETAILS OF FIRE ACCESS ROAD, SEE CIVIL DRAWINGS.
4. FOR DETAILS OF TRACK ALIGNMENT, SEE TRACK DRAWINGS.
5. FOR DETAILS OF LINK US VIADUCT OVER US-101, SEE OFF-SITE STRUCTURAL DRAWINGS.
6. VERIFY ALL DIMENSIONS OF LINK US VIADUCT OVER US-101 WITH OFF-SITE STRUCTURES.
7. STEEL TRUSS MUST BE FABRICATED PER CALTRANS SPECIFICATIONS, DESIGNED WITH GENERAL CONTRACTOR AND SHOWN IN SUBSEQUENT SUBMITTAL.
8. BRIDGE AESTHETIC TREATMENT MUST ADHERE TO THE CALIFORNIA DEPARTMENT OF TRANSPORTATION CONSTRUCTION MANUAL 2019.
9. BRIDGE AESTHETIC TREATMENT MUST ADHERE TO CALIFORNIA'S MUTCD 2014.
10. VISUAL IMPACT ASSESSMENT (VIA) LEVEL MUST BE EVALUATED AND SHOWN IN SUBSEQUENT SUBMITTAL.
11. BRIDGE AESTHETIC TREATMENT MUST ADHERE TO THE CALIFORNIA ENVIRONMENTAL QUALITY ACT (CEQA) AND THE NATIONAL ENVIRONMENTAL POLICY ACT (NEPA).
12. CONTRACTOR TO INSTALL LED LINEAR LIGHT FIXTURE WITHOUT CURVATURE OR DEVIATION FROM ITS LINEAR PATH IN ANY DIRECTION.
13. HIGHWAY LIGHTING NOT SHOWN FOR CLARITY, TO BE PROVIDED PER CALTRANS SPECIFICATIONS IN SUBSEQUENT SUBMITTAL.

GRAPHICS LEGEND

- AESTHETIC TREATMENT A
- AESTHETIC TREATMENT B
- AESTHETIC TREATMENT C
- OWNER FURNISHED, CONTRACTOR INSTALLED ART INSTALLATION
- INTEGRAL COLORED CONCRETE
- TRACK CL
- EARTH
- RETAINED FILL

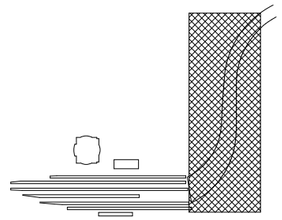

KEY PLAN

35% DESIGN PLANS
NOT FOR CONSTRUCTION

preliminary

Original plan submittal made in Aug. 2019

THE PREPARATION OF THIS DRAWING HAS BEEN FINANCED IN PART THROUGH A GRANT FROM THE U.S. DEPARTMENT OF TRANSPORTATION, FEDERAL TRANSIT ADMINISTRATION (fta), UNDER THE FEDERAL TRANSIT ACT OF 1964, AS AMENDED, AND IN PART BY THE TAXES OF THE CITIZENS OF LOS ANGELES COUNTY AND OF THE STATE OF CALIFORNIA

Rev No.	Date	Description
1	3/21	Plan added to set
2	12/21	
3	6/22	

DESIGNED BY	M. MAH
DRAWN BY	M. PERROS
CHECKED BY	M. RAMIREZ
IN CHARGE	T. KIM
DATE	3/05/2021

Metro
LOS ANGELES COUNTY METROPOLITAN TRANSPORTATION AUTHORITY
V&A, INC. 975 S. FAIR OAKS AVENUE PASADENA, CA 91105 (213) 972-8700
HDR ENGINEERING 350 S GRAND AVENUE SUITE 2900 LOS ANGELES, CA 90071 (213) 228-6800

SUBMITTED: _____ PROJECT MANAGER

APPROVED: _____

LINK UNION STATION PROJECT
ARCHITECTURAL DRAWINGS
LAUS VIADUCT OVER US-101 - BRIDGE LEVEL PLAN

CONTRACT NO.	
DRAWING NO.	AB-100
REV.	0
SCALE	1" = 80'-0"
SHEET NO.	74

C:\n5\2017-A4-LS\2-2D\2-CONTAINER_PHASE_A\17_A\PRR\R05.rvt
5/12/2020 11:30:35 AM

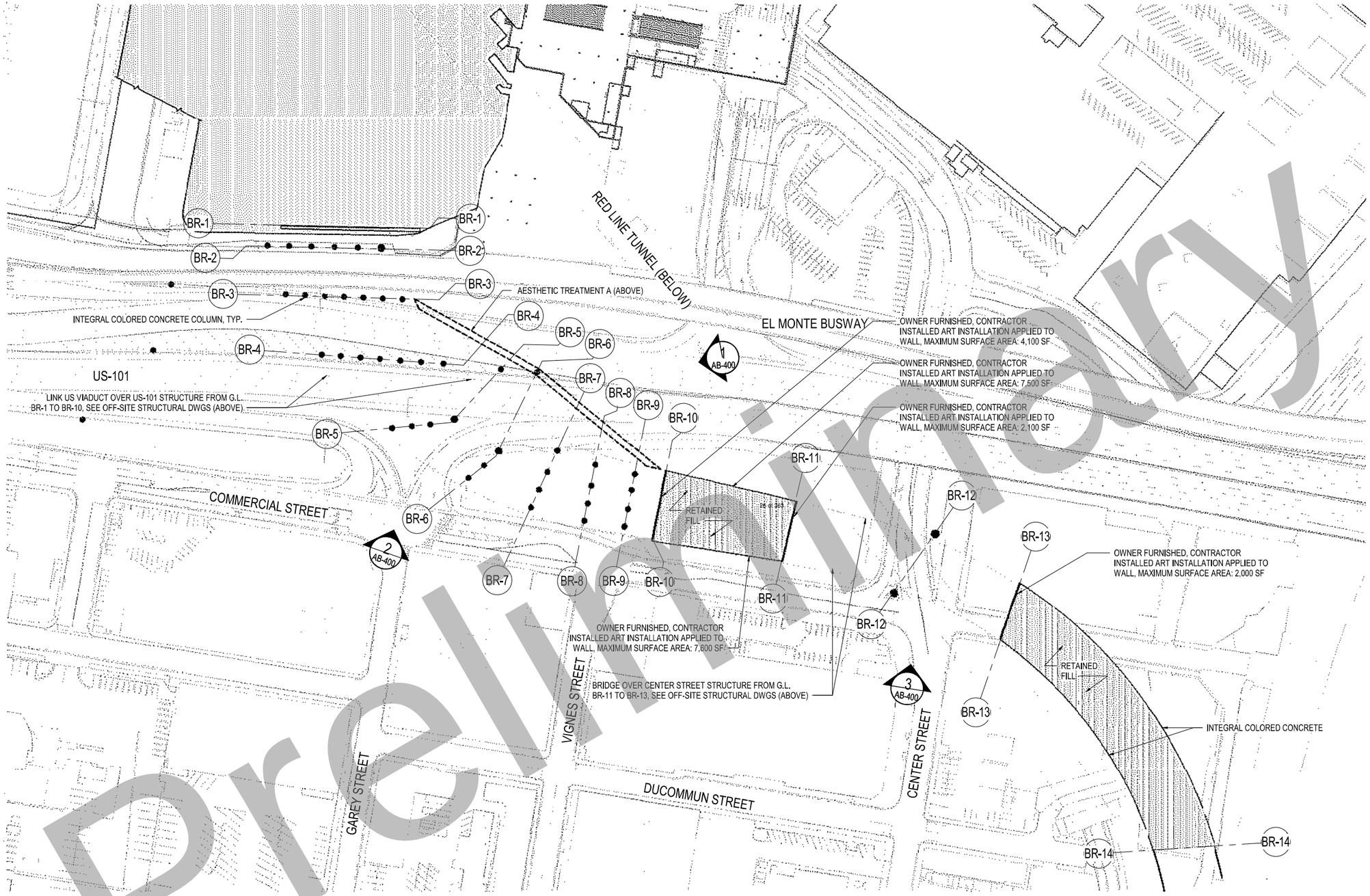

GENERAL NOTES

1. EXISTING PASSENGER TUNNEL TO REMAIN IN SERVICE. CONTRACTOR TO PROVIDE PEDESTRIAN PROTECTION AGAINST ANY AND ALL HAZARDS. PEDESTRIAN PROTECTION SHALL CONFORM TO ALL REGULATIONS.
2. FOR LEVEL DATUMS, SEE CIVIL DRAWINGS.
3. FOR DETAILS OF FIRE ACCESS ROAD, SEE CIVIL DRAWINGS.
4. FOR DETAILS OF TRACK ALIGNMENT, SEE TRACK DRAWINGS.
5. FOR DETAILS OF LINK US VIADUCT OVER US - 101, SEE OFF-SITE STRUCTURAL DRAWINGS.
6. VERIFY ALL DIMENSIONS OF LINK US VIADUCT OVER US-101 WITH OFF-SITE STRUCTURES.
7. STEEL TRUSS MUST BE FABRICATED PER CALTRANS SPECIFICATIONS, DESIGNED WITH GENERAL CONTRACTOR AND SHOWN IN SUBSEQUENT SUBMITTAL.
8. BRIDGE AESTHETIC TREATMENT MUST ADHERE TO THE CALIFORNIA DEPARTMENT OF TRANSPORTATION CONSTRUCTION MANUAL 2019.
9. BRIDGE AESTHETIC TREATMENT MUST ADHERE TO CALIFORNIA'S MUTCD 2014.
10. VISUAL IMPACT ASSESSMENT (VIA) LEVEL MUST BE EVALUATED AND SHOWN IN SUBSEQUENT SUBMITTAL.
11. BRIDGE AESTHETIC TREATMENT MUST ADHERE TO THE CALIFORNIA ENVIRONMENTAL QUALITY ACT (CEQA) AND THE NATIONAL ENVIRONMENTAL POLICY ACT (NEPA).
12. CONTRACTOR TO INSTALL LED LINEAR LIGHT FIXTURE WITHOUT CURVATURE OR DEVIATION FROM ITS LINEAR PATH IN ANY DIRECTION.
13. HIGHWAY LIGHTING NOT SHOWN FOR CLARITY, TO BE PROVIDED PER CALTRANS SPECIFICATIONS IN SUBSEQUENT SUBMITTAL.

GRAPHICS LEGEND

- AESTHETIC TREATMENT A
- AESTHETIC TREATMENT B
- AESTHETIC TREATMENT C
- OWNER FURNISHED, CONTRACTOR INSTALLED ART INSTALLATION
- INTEGRAL COLORED CONCRETE
- TRACK CL
- EARTH
- RETAINED FILL

KEY PLAN

1 AB-101 LAUS VIADUCT OVER US-101 - STREET LEVEL PLAN
1" = 80'-0"

0' 40' 80' 160'

35% DESIGN PLANS
NOT FOR CONSTRUCTION

Preliminary

Original plan submittal made in Aug. 2019

THE PREPARATION OF THIS DRAWING HAS BEEN FINANCED IN PART THROUGH A GRANT FROM THE U.S. DEPARTMENT OF TRANSPORTATION, FEDERAL TRANSIT ADMINISTRATION (fta), UNDER THE FEDERAL TRANSIT ACT OF 1964, AS AMENDED, AND IN PART BY THE TAXES OF THE CITIZENS OF LOS ANGELES COUNTY AND OF THE STATE OF CALIFORNIA

Rev No.	Date	Description
1	3/21	Plan added to set
2	12/21	
3	6/22	

DESIGNED BY	M. MAH
DRAWN BY	M. PERROS
CHECKED BY	M. RAMIREZ
IN CHARGE	T. KIM
DATE	3/05/2021

Metro
LOS ANGELES COUNTY METROPOLITAN TRANSPORTATION AUTHORITY
V&A, INC. 975 S. FAIR OAKS AVENUE PASADENA, CA 91105 (213) 972-0700
HDR ENGINEERING 350 S GRAND AVENUE SUITE 2900 LOS ANGELES, CA 90071 (213) 228-6800

SUBMITTED: _____ PROJECT MANAGER

APPROVED: _____

LINK UNION STATION PROJECT
ARCHITECTURAL DRAWINGS
LAUS VIADUCT OVER US-101 - STREET LEVEL PLAN

CONTRACT NO.	
DRAWING NO.	AB-101
REV.	0
SCALE	1" = 80'-0"
SHEET NO.	75

C:\v10\01\Arc\US202\CONTAINER_PHASE_A\A17_ABRERR05.rvt
5/12/2020 11:30:56 AM

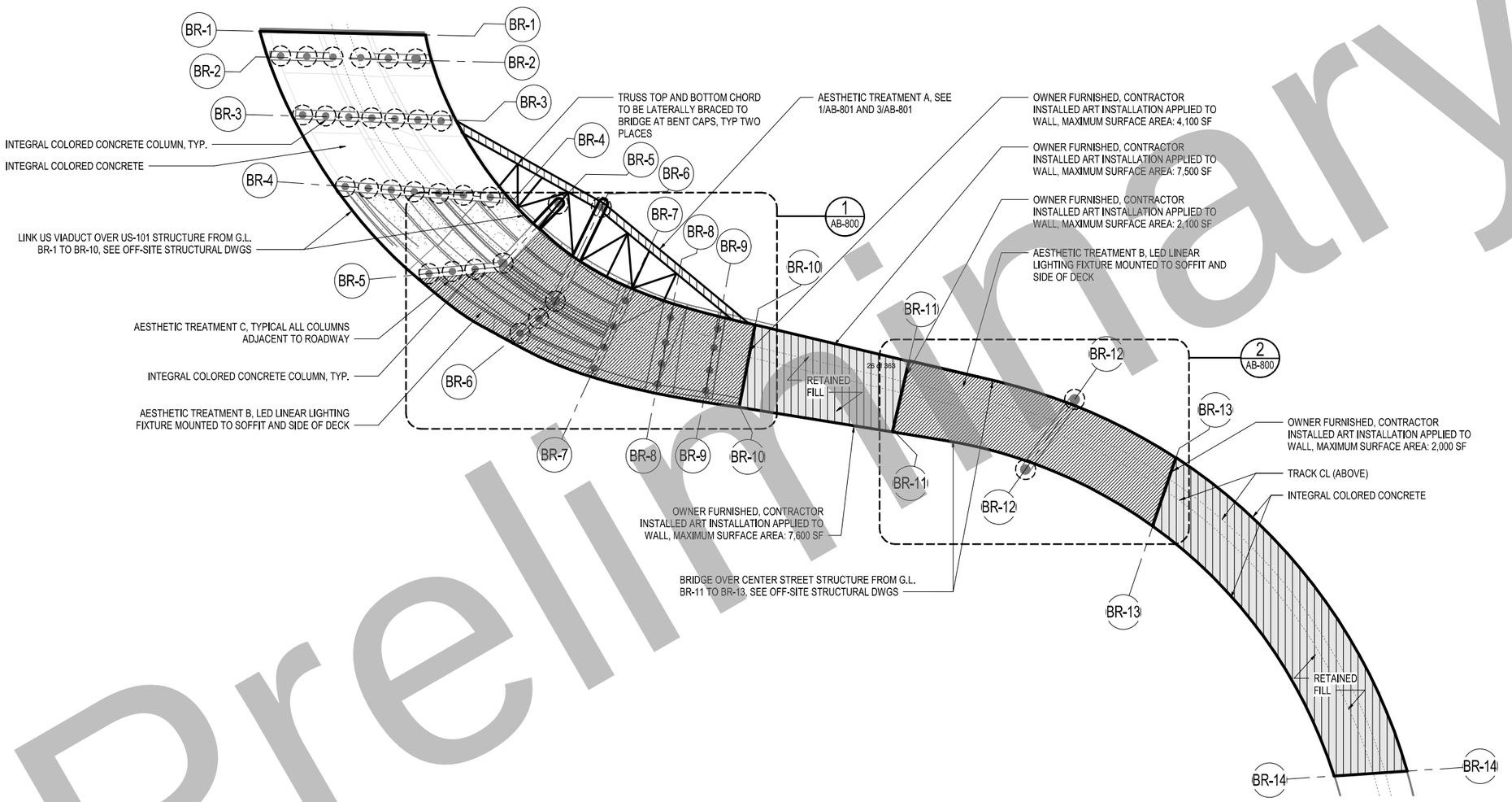

1 AB-150 LAUS VIADUCT OVER US 101 - STREET LEVEL REFLECTED CEILING PLAN
1" = 80'-0"

0' 40' 80' 160'

GENERAL NOTES

1. EXISTING PASSENGER TUNNEL TO REMAIN IN SERVICE. CONTRACTOR TO PROVIDE PEDESTRIAN PROTECTION AGAINST ANY AND ALL HAZARDS. PEDESTRIAN PROTECTION SHALL CONFORM TO ALL REGULATIONS.
2. FOR LEVEL DATUMS, SEE CIVIL DRAWINGS.
3. FOR DETAILS OF FIRE ACCESS ROAD, SEE CIVIL DRAWINGS.
4. FOR DETAILS OF TRACK ALIGNMENT, SEE TRACK DRAWINGS.
5. FOR DETAILS OF LINK US VIADUCT OVER US-101, SEE OFF-SITE STRUCTURAL DRAWINGS.
6. VERIFY ALL DIMENSIONS OF LINK US VIADUCT OVER US-101 WITH OFF-SITE STRUCTURES.
7. STEEL TRUSS MUST BE FABRICATED PER CALTRANS SPECIFICATIONS, DESIGNED WITH GENERAL CONTRACTOR AND SHOWN IN SUBSEQUENT SUBMITTAL.
8. BRIDGE AESTHETIC TREATMENT MUST ADHERE TO THE CALIFORNIA DEPARTMENT OF TRANSPORTATION CONSTRUCTION MANUAL 2019.
9. BRIDGE AESTHETIC TREATMENT MUST ADHERE TO CALIFORNIA'S MUTCD 2014.
10. VISUAL IMPACT ASSESSMENT (VIA) LEVEL MUST BE EVALUATED AND SHOWN IN SUBSEQUENT SUBMITTAL.
11. BRIDGE AESTHETIC TREATMENT MUST ADHERE TO THE CALIFORNIA ENVIRONMENTAL QUALITY ACT (CEQA) AND THE NATIONAL ENVIRONMENTAL POLICY ACT (NEPA).
12. CONTRACTOR TO INSTALL LED LINEAR LIGHT FIXTURE WITHOUT CURVATURE OR DEVIATION FROM ITS LINEAR PATH IN ANY DIRECTION.
13. HIGHWAY LIGHTING NOT SHOWN FOR CLARITY, TO BE PROVIDED PER CALTRANS SPECIFICATIONS IN SUBSEQUENT SUBMITTAL.

GRAPHICS LEGEND

- AESTHETIC TREATMENT A
- AESTHETIC TREATMENT B
- AESTHETIC TREATMENT C
- OWNER FURNISHED, CONTRACTOR INSTALLED ART INSTALLATION
- INTEGRAL COLORED CONCRETE
- TRACK CL
- EARTH
- RETAINED FILL

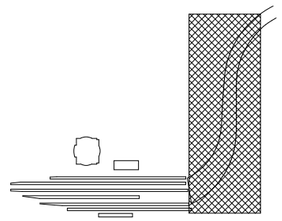

KEY PLAN

35% DESIGN PLANS
NOT FOR CONSTRUCTION

Preliminary

Original plan submittal made in Aug. 2019

Rev No.	Date	Description
1	3/21	Plan added to set
2	12/21	
3	6/22	

THE PREPARATION OF THIS DRAWING HAS BEEN FINANCED IN PART THROUGH A GRANT FROM THE U.S. DEPARTMENT OF TRANSPORTATION, FEDERAL TRANSIT ADMINISTRATION (fta), UNDER THE FEDERAL TRANSIT ACT OF 1964, AS AMENDED, AND IN PART BY THE TAXES OF THE CITIZENS OF LOS ANGELES COUNTY AND OF THE STATE OF CALIFORNIA

DESIGNED BY M. MAH
DRAWN BY M. PERROS
CHECKED BY M. RAMIREZ
IN CHARGE T. KIM
DATE 3/05/2021

Metro
LOS ANGELES COUNTY
METROPOLITAN TRANSPORTATION AUTHORITY

VSA, INC.
975 S. FAIR OAKS AVENUE
PASADENA, CA 91105
(213) 972-0700

HDR ENGINEERING
350 S GRAND AVENUE
SUITE 2900
LOS ANGELES, CA 90071
(213) 239-6800

SUBMITTED: _____ PROJECT MANAGER

APPROVED: _____

LINK UNION STATION PROJECT
ARCHITECTURAL DRAWINGS
LAUS VIADUCT OVER US-101 - STREET LEVEL REFLECTED CEILING PLAN

CONTRACT NO.
DRAWING NO. AB-150
REV. 0
SCALE 1" = 80'-0"
SHEET NO. 76

C:\rvt2017\AA-US-2202-CONTAINER_PHASE_A\17_MPRROS.rvt
5/12/2020 11:30:59 AM

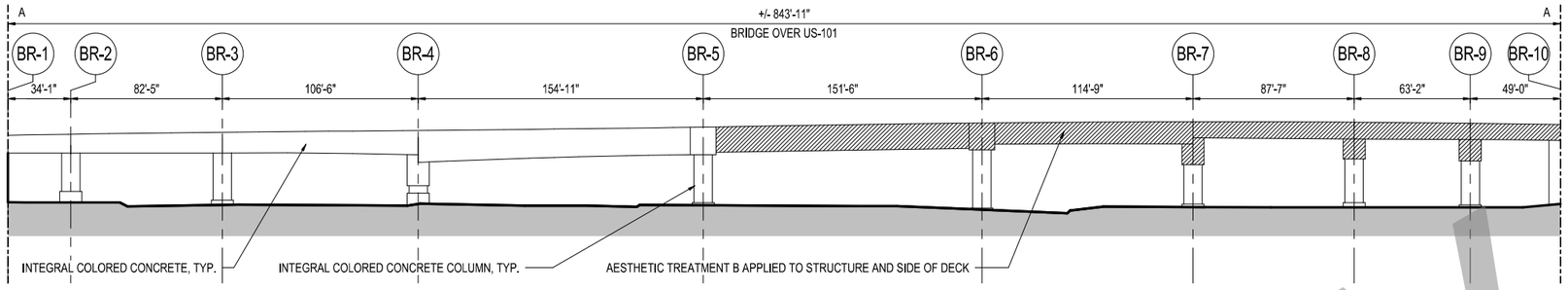

1 AB-200 **BRIDGE DEVELOPED ELEVATION AA**
1" = 40'-0"

0' 20' 40' 80'

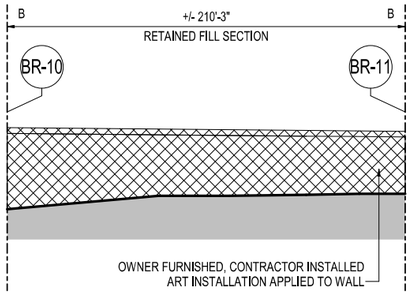

2 AB-200 **BRIDGE DEVELOPED ELEVATION BB**
1" = 40'-0"

0' 20' 40' 80'

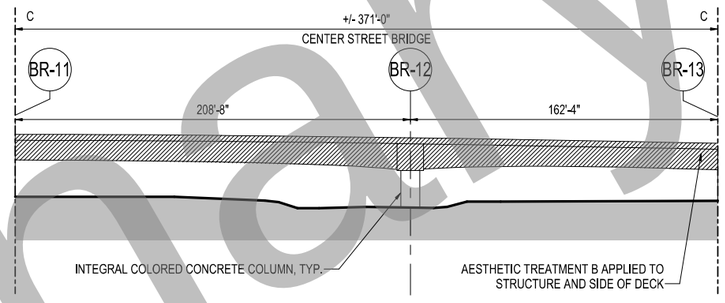

3 AB-200 **BRIDGE DEVELOPED ELEVATION CC**
1" = 40'-0"

0' 20' 40' 80'

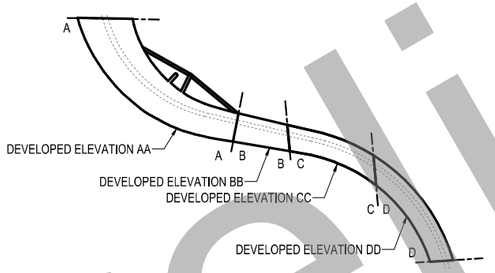

4 AB-200 **LAUS VIADUCT OVER US-101 - KEY PLAN**
NOT TO SCALE

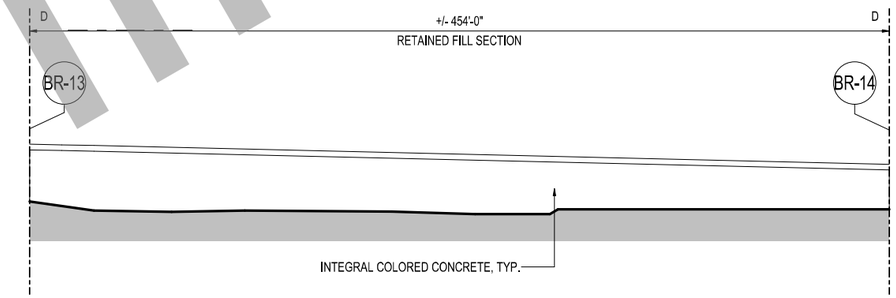

5 AB-200 **BRIDGE DEVELOPED ELEVATION DD**
1" = 40'-0"

0' 20' 40' 80'

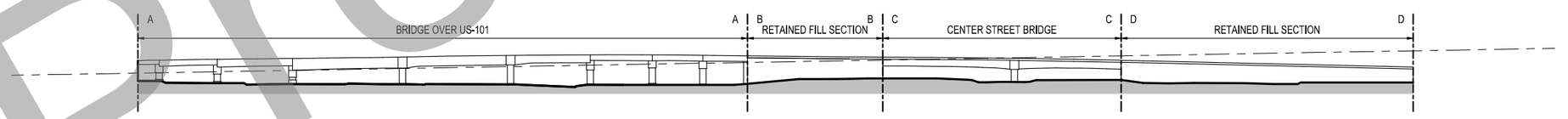

6 AB-200 **BRIDGE DEVELOPED ELEVATION OVERALL**
1" = 100'-0"

0' 50' 100' 200'

GENERAL NOTES

1. EXISTING PASSENGER TUNNEL TO REMAIN IN SERVICE. CONTRACTOR TO PROVIDE PEDESTRIAN PROTECTION AGAINST ANY AND ALL HAZARDS. PEDESTRIAN PROTECTION SHALL CONFORM TO ALL REGULATIONS.
2. FOR LEVEL DATUMS, SEE CIVIL DRAWINGS.
3. FOR DETAILS OF FIRE ACCESS ROAD, SEE CIVIL DRAWINGS.
4. FOR DETAILS OF TRACK ALIGNMENT, SEE TRACK DRAWINGS.
5. FOR DETAILS OF LINK US VIADUCT OVER US - 101, SEE OFF-SITE STRUCTURAL DRAWINGS.
6. VERIFY ALL DIMENSIONS OF LINK US VIADUCT OVER US-101 WITH OFF-SITE STRUCTURES.
7. STEEL TRUSS MUST BE FABRICATED PER CALTRANS SPECIFICATIONS, DESIGNED WITH GENERAL CONTRACTOR AND SHOWN IN SUBSEQUENT SUBMITTAL.
8. BRIDGE AESTHETIC TREATMENT MUST ADHERE TO THE CALIFORNIA DEPARTMENT OF TRANSPORTATION CONSTRUCTION MANUAL 2019.
9. BRIDGE AESTHETIC TREATMENT MUST ADHERE TO CALIFORNIA'S MUTCD 2014.
10. VISUAL IMPACT ASSESSMENT (VIA) LEVEL MUST BE EVALUATED AND SHOWN IN SUBSEQUENT SUBMITTAL.
11. BRIDGE AESTHETIC TREATMENT MUST ADHERE TO THE CALIFORNIA ENVIRONMENTAL QUALITY ACT (CEQA) AND THE NATIONAL ENVIRONMENTAL POLICY ACT (NEPA).
12. CONTRACTOR TO INSTALL LED LINEAR LIGHT FIXTURE WITHOUT CURVATURE OR DEVIATION FROM ITS LINEAR PATH IN ANY DIRECTION.
13. HIGHWAY LIGHTING NOT SHOWN FOR CLARITY, TO BE PROVIDED PER CALTRANS SPECIFICATIONS IN SUBSEQUENT SUBMITTAL.

GRAPHICS LEGEND

- AESTHETIC TREATMENT A
- AESTHETIC TREATMENT B
- AESTHETIC TREATMENT C
- OWNER FURNISHED, CONTRACTOR INSTALLED ART INSTALLATION
- INTEGRAL COLORED CONCRETE
- TRACK CL
- EARTH
- RETAINED FILL

ELEVATIONS NOTE: ALL ELEVATIONS TITLED DEVELOPED. CURVED GEOMETRY UN-ROLLED FOR DRAWING AND DIMENSIONS.

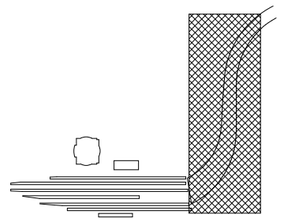

KEY PLAN

35% DESIGN PLANS
NOT FOR CONSTRUCTION

Preliminary

Original plan submittal made in Aug. 2019

THE PREPARATION OF THIS DRAWING HAS BEEN FINANCED IN PART THROUGH A GRANT FROM THE U.S. DEPARTMENT OF TRANSPORTATION, FEDERAL TRANSIT ADMINISTRATION (fta), UNDER THE FEDERAL TRANSIT ACT OF 1964, AS AMENDED, AND IN PART BY THE TAXES OF THE CITIZENS OF LOS ANGELES COUNTY AND OF THE STATE OF CALIFORNIA

Rev No.	Date	Description
1	3/21	Plan added to set
2	12/21	
3	6/22	

DESIGNED BY M. MAH
DRAWN BY M. PERROS
CHECKED BY M. RAMIREZ
IN CHARGE T. KIM
DATE 3/05/2021

LOS ANGELES COUNTY
METROPOLITAN TRANSPORTATION AUTHORITY

V&A, INC.
975 S. FAIR OAKS AVENUE
PASADENA, CA 91105
(213) 972-4700

HDR ENGINEERING
350 S GRAND AVENUE
SUITE 2900
LOS ANGELES, CA 90071
(213) 228-6800

SUBMITTED: _____ PROJECT MANAGER

APPROVED: _____

LINK UNION STATION PROJECT
ARCHITECTURAL DRAWINGS
LAUS VIADUCT OVER US-101 - ELEVATIONS SHEET 1 OF 2

CONTRACT NO.
DRAWING NO. AB-200
REV. 0
SCALE AS NOTED
SHEET NO. 77

C:\v2017\AA\US202\CONTAINER_PHASE_AA17_ABRERROR.rvt
5/12/2020 11:30:58 AM

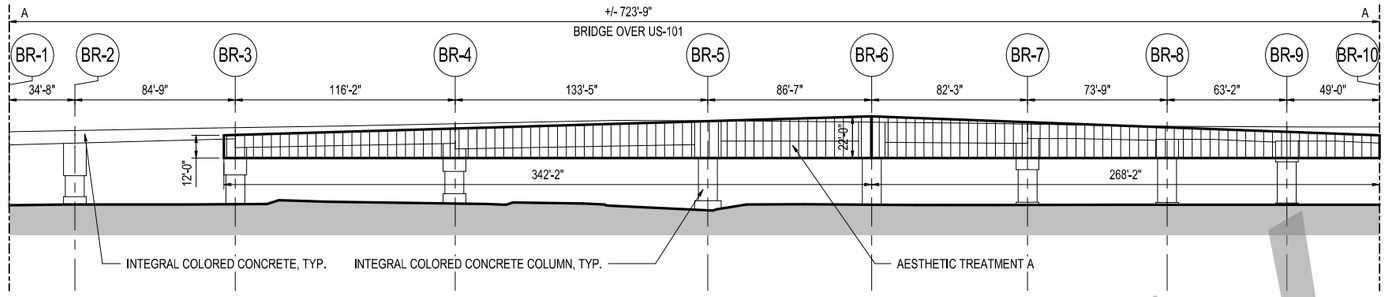

1 AB-201 MIRRORED DEVELOPED ELEVATION AA
1" = 40'-0"

0' 20' 40' 80'

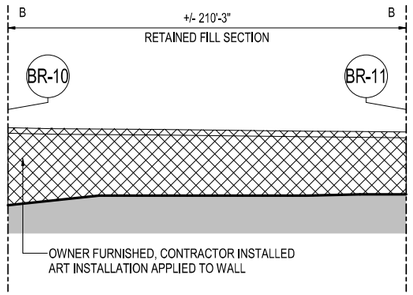

2 AB-201 MIRRORED DEVELOPED ELEVATION BB
1" = 40'-0"

0' 20' 40' 80'

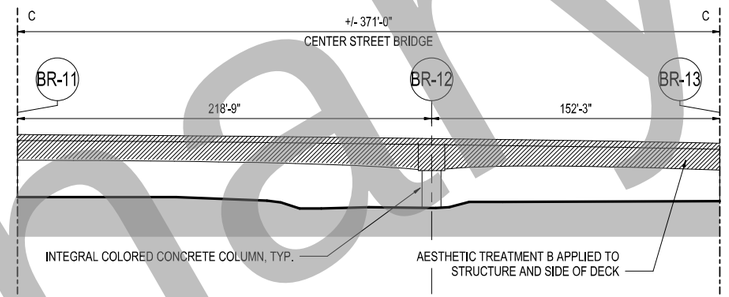

3 AB-201 MIRRORED DEVELOPED ELEVATION CC
1" = 40'-0"

0' 20' 40' 80'

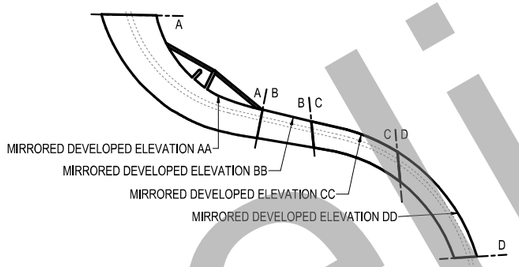

4 AB-201 LAUS VIADUCT OVER US-101 - KEY PLAN
NOT TO SCALE

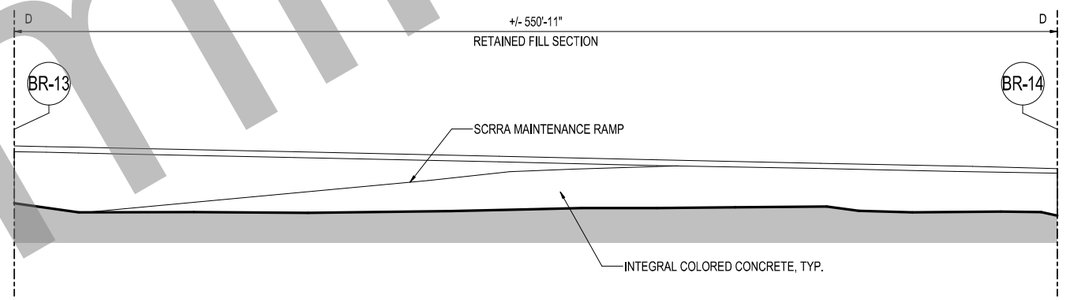

5 AB-201 MIRRORED DEVELOPED ELEVATION DD
1" = 40'-0"

0' 20' 40' 80'

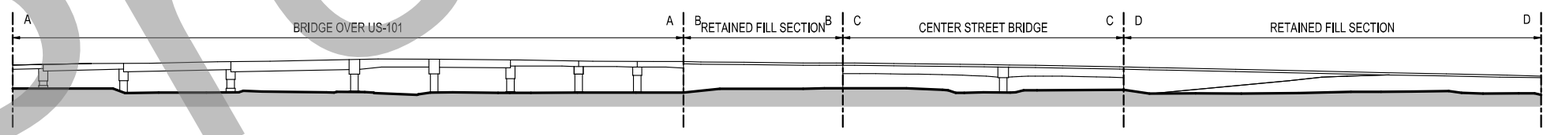

6 AB-201 MIRRORED DEVELOPED ELEVATION OVERALL
1" = 100'-0"

0' 50' 100' 200'

GENERAL NOTES

1. EXISTING PASSENGER TUNNEL TO REMAIN IN SERVICE. CONTRACTOR TO PROVIDE PEDESTRIAN PROTECTION AGAINST ANY AND ALL HAZARDS. PEDESTRIAN PROTECTION SHALL CONFORM TO ALL REGULATIONS.
2. FOR LEVEL DATUMS, SEE CIVIL DRAWINGS.
3. FOR DETAILS OF FIRE ACCESS ROAD, SEE CIVIL DRAWINGS.
4. FOR DETAILS OF TRACK ALIGNMENT, SEE TRACK DRAWINGS.
5. FOR DETAILS OF LINK US VIADUCT OVER US - 101, SEE OFF-SITE STRUCTURAL DRAWINGS.
6. VERIFY ALL DIMENSIONS OF LINK US VIADUCT OVER US-101 WITH OFF-SITE STRUCTURES.
7. STEEL TRUSS MUST BE FABRICATED PER CALTRANS SPECIFICATIONS, DESIGNED WITH GENERAL CONTRACTOR AND SHOWN IN SUBSEQUENT SUBMITTAL.
8. BRIDGE AESTHETIC TREATMENT MUST ADHERE TO THE CALIFORNIA DEPARTMENT OF TRANSPORTATION CONSTRUCTION MANUAL 2019.
9. BRIDGE AESTHETIC TREATMENT MUST ADHERE TO CALIFORNIA'S MUTCD 2014.
10. VISUAL IMPACT ASSESSMENT (VIA) LEVEL MUST BE EVALUATED AND SHOWN IN SUBSEQUENT SUBMITTAL.
11. BRIDGE AESTHETIC TREATMENT MUST ADHERE TO THE CALIFORNIA ENVIRONMENTAL QUALITY ACT (CEQA) AND THE NATIONAL ENVIRONMENTAL POLICY ACT (NEPA).
12. CONTRACTOR TO INSTALL LED LINEAR LIGHT FIXTURE WITHOUT CURVATURE OR DEVIATION FROM ITS LINEAR PATH IN ANY DIRECTION.
13. HIGHWAY LIGHTING NOT SHOWN FOR CLARITY, TO BE PROVIDED PER CALTRANS SPECIFICATIONS IN SUBSEQUENT SUBMITTAL.

GRAPHICS LEGEND

- AESTHETIC TREATMENT A
- AESTHETIC TREATMENT B
- AESTHETIC TREATMENT C
- OWNER FURNISHED, CONTRACTOR INSTALLED ART INSTALLATION
- INTEGRAL COLORED CONCRETE
- TRACK CL
- EARTH
- RETAINED FILL

ELEVATIONS NOTE: ALL ELEVATIONS TITLED DEVELOPED. CURVED GEOMETRY UN-ROLLED FOR DRAWING AND DIMENSIONS.

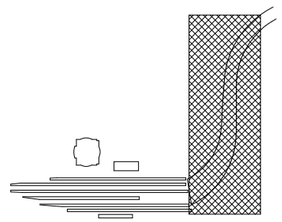

KEY PLAN

35% DESIGN PLANS
NOT FOR CONSTRUCTION

Preliminary

Original plan submittal made in Aug. 2019

THE PREPARATION OF THIS DRAWING HAS BEEN FINANCED IN PART THROUGH A GRANT FROM THE U.S. DEPARTMENT OF TRANSPORTATION, FEDERAL TRANSIT ADMINISTRATION (fta), UNDER THE FEDERAL TRANSIT ACT OF 1964, AS AMENDED, AND IN PART BY THE TAXES OF THE CITIZENS OF LOS ANGELES COUNTY AND OF THE STATE OF CALIFORNIA

Rev No.	Date	Description
1	3/21	Plan added to set
2	12/21	
3	6/22	

DESIGNED BY M. MAH
DRAWN BY M. PERROS
CHECKED BY M. RAMIREZ
IN CHARGE T. KIM
DATE 3/05/2021

LOS ANGELES COUNTY
METROPOLITAN TRANSPORTATION AUTHORITY

V&A, INC.
975 S. FAIR OAKS AVENUE
PASADENA, CA 91105
(213) 972-0700

HDR ENGINEERING
350 S GRAND AVENUE
SUITE 2900
LOS ANGELES, CA 90071
(213) 228-6800

SUBMITTED: _____ PROJECT MANAGER

APPROVED: _____

LINK UNION STATION PROJECT
ARCHITECTURAL DRAWINGS
LAUS VIADUCT OVER US-101 - ELEVATIONS SHEET 2 OF 2

CONTRACT NO.
DRAWING NO. AB-201
REV. 0
SCALE AS NOTED
SHEET NO. 78

C:\n\2017\AA\US-202\CONTRACT\EIS_PHASE_A\A17_AP\ERRORS.rvt
5/12/2020 11:30:59 AM

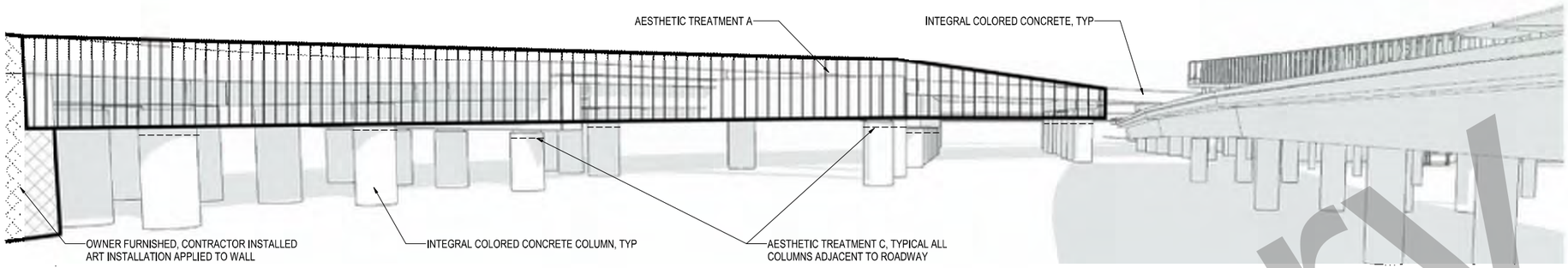

1 AB-400 LAUS VIADUCT VIEW WEST ON US-101

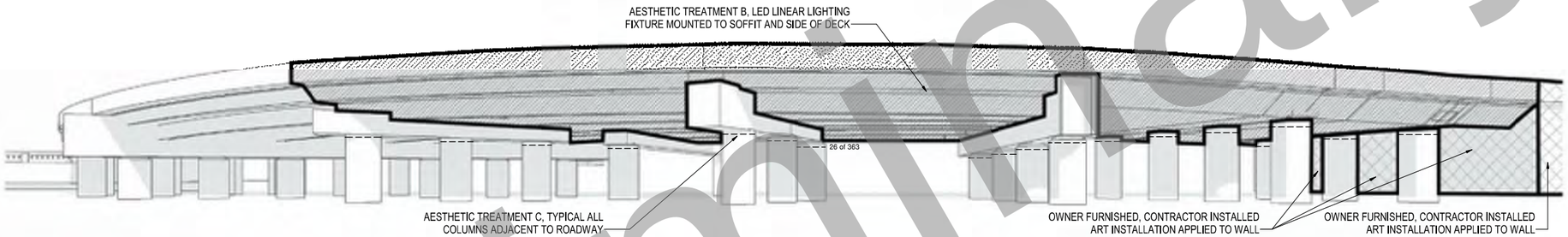

2 AB-400 LAUS VIADUCT VIEW NORTH AT US-101 ON RAMP

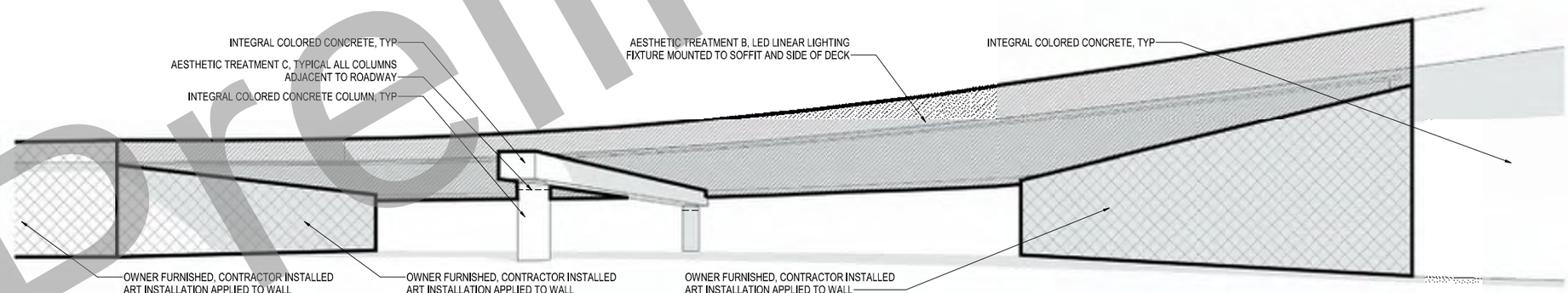

3 AB-400 LAUS VIADUCT VIEW NORTH AT CENTER STREET

GENERAL NOTES

1. EXISTING PASSENGER TUNNEL TO REMAIN IN SERVICE. CONTRACTOR TO PROVIDE PEDESTRIAN PROTECTION AGAINST ANY AND ALL HAZARDS. PEDESTRIAN PROTECTION SHALL CONFORM TO ALL REGULATIONS.
2. FOR LEVEL DATUMS, SEE CIVIL DRAWINGS.
3. FOR DETAILS OF FIRE ACCESS ROAD, SEE CIVIL DRAWINGS.
4. FOR DETAILS OF TRACK ALIGNMENT, SEE TRACK DRAWINGS.
5. FOR DETAILS OF LINK US VIADUCT OVER US - 101, SEE OFF-SITE STRUCTURAL DRAWINGS.
6. VERIFY ALL DIMENSIONS OF LINK US VIADUCT OVER US-101 WITH OFF-SITE STRUCTURES.
7. STEEL TRUSS MUST BE FABRICATED PER CALTRANS SPECIFICATIONS. DESIGNED WITH GENERAL CONTRACTOR AND SHOWN IN SUBSEQUENT SUBMITTAL.
8. BRIDGE AESTHETIC TREATMENT MUST ADHERE TO THE CALIFORNIA DEPARTMENT OF TRANSPORTATION CONSTRUCTION MANUAL 2019.
9. BRIDGE AESTHETIC TREATMENT MUST ADHERE TO CALIFORNIA'S MUTCD 2014.
10. VISUAL IMPACT ASSESSMENT (VIA) LEVEL MUST BE EVALUATED AND SHOWN IN SUBSEQUENT SUBMITTAL.
11. BRIDGE AESTHETIC TREATMENT MUST ADHERE TO THE CALIFORNIA ENVIRONMENTAL QUALITY ACT (CEQA) AND THE NATIONAL ENVIRONMENTAL POLICY ACT (NEPA).
12. CONTRACTOR TO INSTALL LED LINEAR LIGHT FIXTURE WITHOUT CURVATURE OR DEVIATION FROM ITS LINEAR PATH IN ANY DIRECTION.
13. HIGHWAY LIGHTING NOT SHOWN FOR CLARITY, TO BE PROVIDED PER CALTRANS SPECIFICATIONS IN SUBSEQUENT SUBMITTAL.

GRAPHICS LEGEND

- AESTHETIC TREATMENT A
- AESTHETIC TREATMENT B
- AESTHETIC TREATMENT C
- OWNER FURNISHED, CONTRACTOR INSTALLED ART INSTALLATION
- INTEGRAL COLORED CONCRETE
- TRACK CL
- EARTH
- RETAINED FILL

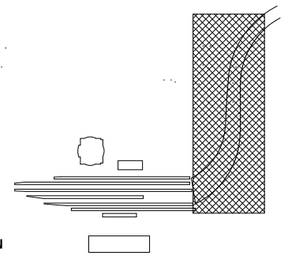

KEY PLAN

35% DESIGN PLANS
NOT FOR CONSTRUCTION

Preliminary

Original plan submittal made in Aug. 2019

Rev No.	Date	Description
1	3/21	Plan added to set
2	12/21	
3	6/22	

DESIGNED BY M. MAH
DRAWN BY M. PERROS
CHECKED BY M. RAMIREZ
IN CHARGE T. KIM
DATE 3/05/2021

THE PREPARATION OF THIS DRAWING HAS BEEN FINANCED IN PART THROUGH A GRANT FROM THE U.S. DEPARTMENT OF TRANSPORTATION, FEDERAL TRANSIT ADMINISTRATION (fta), UNDER THE FEDERAL TRANSIT ACT OF 1964, AS AMENDED, AND IN PART BY THE TAXES OF THE CITIZENS OF LOS ANGELES COUNTY AND OF THE STATE OF CALIFORNIA

Metro
LOS ANGELES COUNTY METROPOLITAN TRANSPORTATION AUTHORITY
V&A, INC. 875 S. FAIR OAKS AVENUE PASADENA, CA 91105 (213) 972-0700
HDR ENGINEERING 350 S GRAND AVENUE SUITE 2900 LOS ANGELES, CA 90071 (213) 2394800

SUBMITTED: _____ PROJECT MANAGER
APPROVED: _____

LINK UNION STATION PROJECT
ARCHITECTURAL DRAWINGS
LAUS VIADUCT OVER US-101 - VIEWS

CONTRACT NO.
DRAWING NO. AB-400
REV. 0
SCALE NONE
SHEET NO. 79

5/12/2020 11:31:01 AM C:\rvt2017\AL\US-252\CONTAINER_PHASE_A417_ARRRR05.rvt

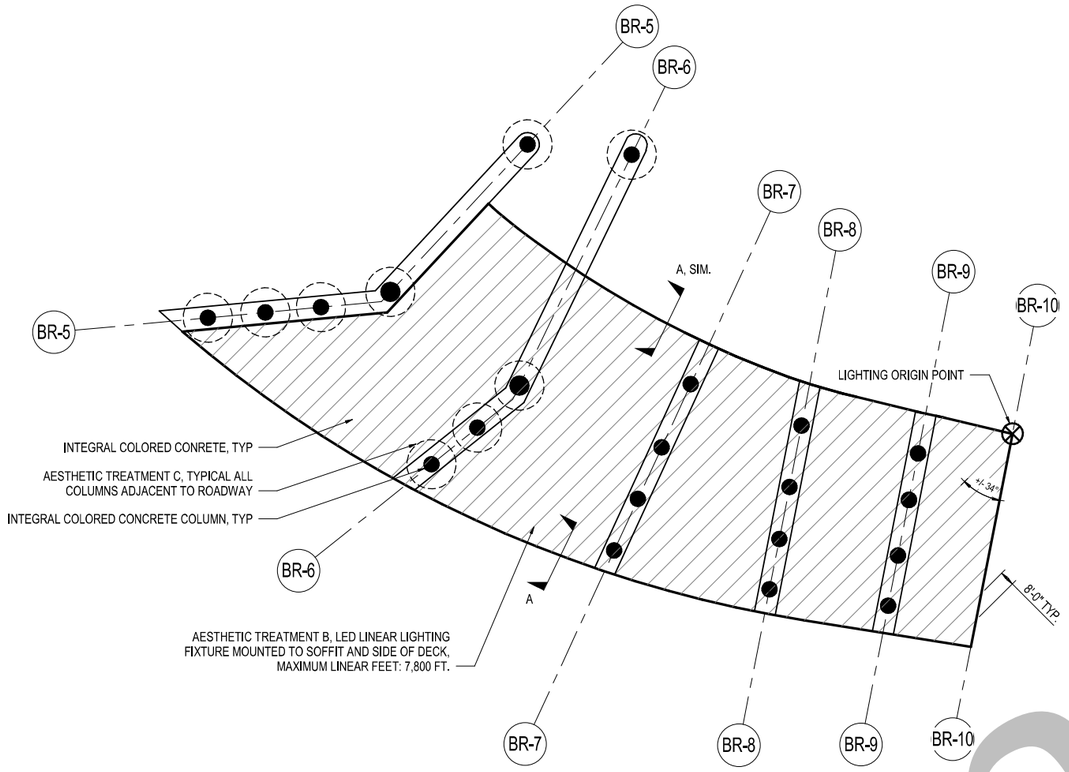

1 AB-800 LAUS VIADUCT ENLARGED REFLECTED CEILING PLAN
1" = 40'-0"
0' 20' 40' 80'

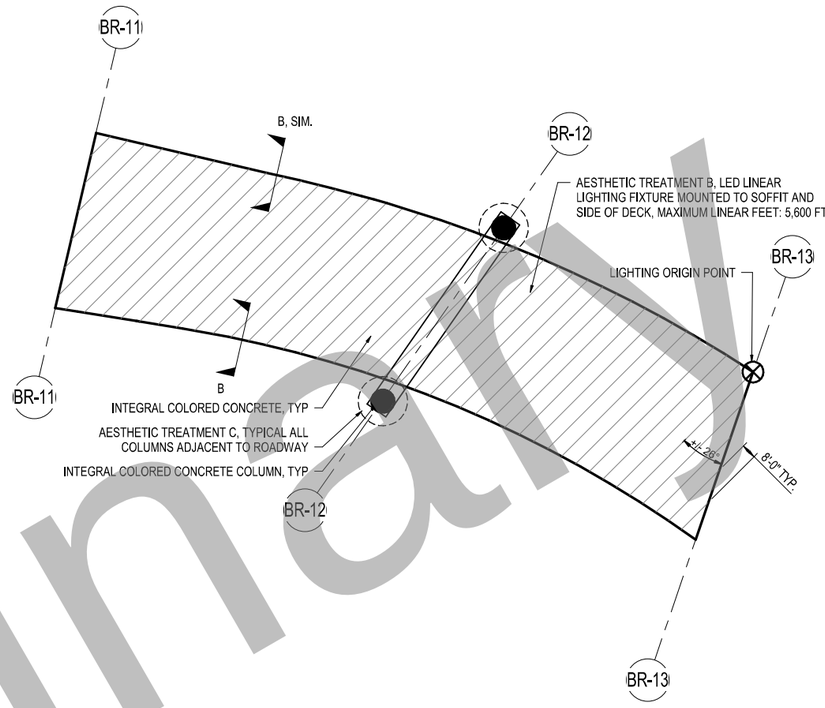

2 AB-800 CENTER STREET ENLARGED REFLECTED CEILING PLAN
1" = 40'-0"
0' 20' 40' 80'

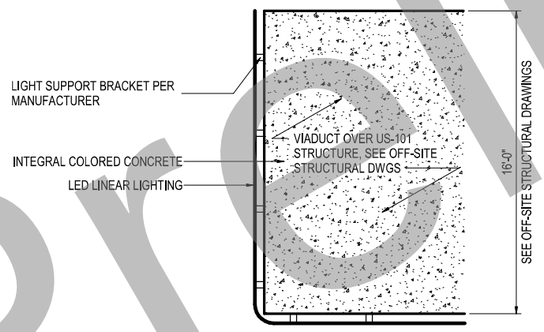

3 AB-800 LAUS VIADUCT TREATMENT SECTION DETAIL A
1/4" = 1'-0"
0' 2' 4' 8'

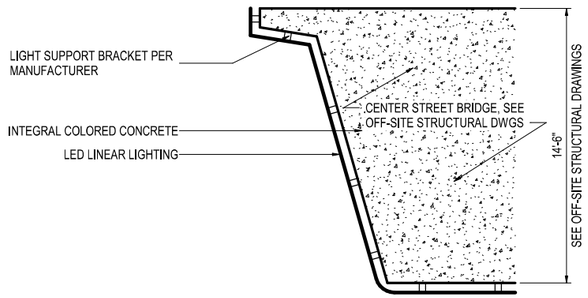

4 AB-800 CENTER STREET TREATMENT SECTION DETAIL B
1/4" = 1'-0"
0' 2' 4' 8'

GENERAL NOTES

1. EXISTING PASSENGER TUNNEL TO REMAIN IN SERVICE. CONTRACTOR TO PROVIDE PEDESTRIAN PROTECTION AGAINST ANY AND ALL HAZARDS. PEDESTRIAN PROTECTION SHALL CONFORM TO ALL REGULATIONS.
2. FOR LEVEL DATUMS, SEE CIVIL DRAWINGS.
3. FOR DETAILS OF FIRE ACCESS ROAD, SEE CIVIL DRAWINGS.
4. FOR DETAILS OF TRACK ALIGNMENT, SEE TRACK DRAWINGS.
5. FOR DETAILS OF LINK US VIADUCT OVER US - 101, SEE OFF-SITE STRUCTURAL DRAWINGS.
6. VERIFY ALL DIMENSIONS OF LINK US VIADUCT OVER US-101 WITH OFF-SITE STRUCTURES.
7. STEEL TRUSS MUST BE FABRICATED PER CALTRANS SPECIFICATIONS, DESIGNED WITH GENERAL CONTRACTOR AND SHOWN IN SUBSEQUENT SUBMITTAL.
8. BRIDGE AESTHETIC TREATMENT MUST ADHERE TO THE CALIFORNIA DEPARTMENT OF TRANSPORTATION CONSTRUCTION MANUAL 2019.
9. BRIDGE AESTHETIC TREATMENT MUST ADHERE TO CALIFORNIA'S MUTCD 2014.
10. VISUAL IMPACT ASSESSMENT (VIA) LEVEL MUST BE EVALUATED AND SHOWN IN SUBSEQUENT SUBMITTAL.
11. BRIDGE AESTHETIC TREATMENT MUST ADHERE TO THE CALIFORNIA ENVIRONMENTAL QUALITY ACT (CEQA) AND THE NATIONAL ENVIRONMENTAL POLICY ACT (NEPA).
12. CONTRACTOR TO INSTALL LED LINEAR LIGHT FIXTURE WITHOUT CURVATURE OR DEVIATION FROM ITS LINEAR PATH IN ANY DIRECTION.
13. HIGHWAY LIGHTING NOT SHOWN FOR CLARITY, TO BE PROVIDED PER CALTRANS SPECIFICATIONS IN SUBSEQUENT SUBMITTAL.

GRAPHICS LEGEND

- AESTHETIC TREATMENT A
- AESTHETIC TREATMENT B
- AESTHETIC TREATMENT C
- OWNER FURNISHED, CONTRACTOR INSTALLED ART INSTALLATION
- INTEGRAL COLORED CONCRETE
- TRACK CL
- EARTH
- RETAINED FILL
- LED LINEAR LIGHTING FIXTURE

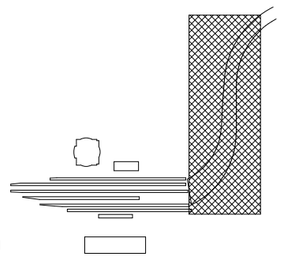

KEY PLAN

35% DESIGN PLANS
NOT FOR CONSTRUCTION

Preliminary

Original plan submittal made in Aug. 2019

THE PREPARATION OF THIS DRAWING HAS BEEN FINANCED IN PART THROUGH A GRANT FROM THE U.S. DEPARTMENT OF TRANSPORTATION, FEDERAL TRANSIT ADMINISTRATION (fta), UNDER THE FEDERAL TRANSIT ACT OF 1964, AS AMENDED, AND IN PART BY THE TAXES OF THE CITIZENS OF LOS ANGELES COUNTY AND OF THE STATE OF CALIFORNIA

Rev No.	Date	Description
1	3/21	Plan added to set
2	12/21	
3	6/22	

DESIGNED BY	M. MAH
DRAWN BY	M. PERROS
CHECKED BY	M. RAMIREZ
IN CHARGE	T. KIM
DATE	3/05/2021

LOS ANGELES COUNTY
METROPOLITAN TRANSPORTATION AUTHORITY

VIA, INC.
975 S. FAIR OAKS AVENUE
PASADENA, CA 91105
(213) 972-0700

HDR ENGINEERING
350 S GRAND AVENUE
SUITE 2900
LOS ANGELES, CA 90071
(213) 239-0800

SUBMITTED: _____ PROJECT MANAGER

APPROVED: _____

LINK UNION STATION PROJECT
ARCHITECTURAL DRAWINGS
LAUS VIADUCT OVER US-101 - ENLARGED REFLECTED CEILING PLANS AND DETAILS

CONTRACT NO.	
DRAWING NO.	AB-800
REV.	0
SCALE	AS NOTED
SHEET NO.	80

5/12/2020 11:31:03 AM C:\HSD\17-AA-LUS-ZZ\DCONTAINER_PHASE_1-A11_EXPERROS.rvt

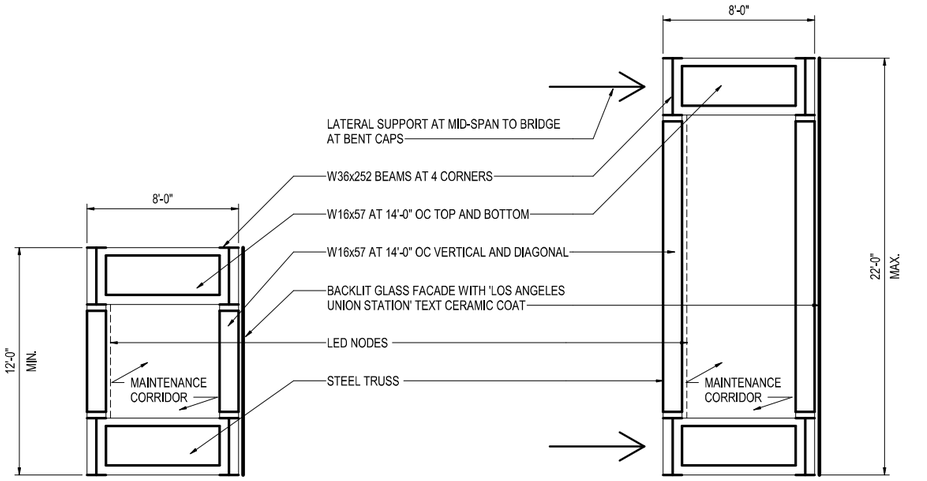

AESTHETIC TREATMENT A - TRANSVERSE SECTION 1

AESTHETIC TREATMENT A - TRANSVERSE SECTION 2

1 AB-801 AESTHETIC TREATMENT A TRUSS SECTIONS

1/4" = 1'-0"

0' 2' 4' 8'

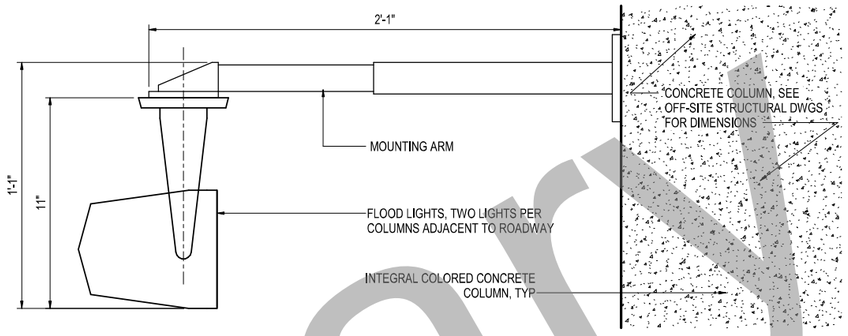

2 AB-801 AESTHETIC TREATMENT C MOUNTING DETAIL

3" = 1'-0"

3" 0' 6" 1'

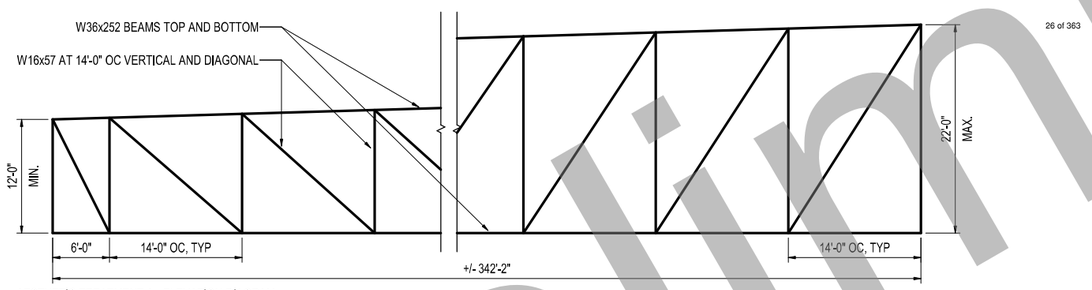

AESTHETIC TREATMENT A - ELEVATION DIAGRAM

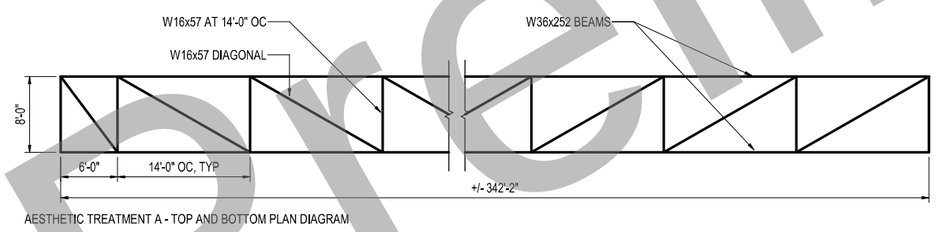

AESTHETIC TREATMENT A - TOP AND BOTTOM PLAN DIAGRAM

3 AB-801 AESTHETIC TREATMENT A TRUSS DIAGRAMS

1/8" = 1'-0"

0' 2' 4' 8'

BRIDGE AESTHETICS SCHEDULE		
AESTHETIC TREATMENT	**QUANTITY**	**DESCRIPTION**
AESTHETIC TREATMENT A	13,000 SF	BILLBOARD WITH HYPER-GRAPHIC 'LOS ANGELES UNION STATION' TEXT, FONT: HELVETICA, CERAMIC COAT ON GLASS; BILLBOARD SHALL BE BACKLIT WITH LED NODES WHICH HAVE THE CAPACITY TO BE INDIVIDUALLY PROGRAMMED WITH RGB COLORS; COLOR KINETICS ICOLOR FLEX LMX OR EQUAL; STEEL TRUSS STRUCTURE SHALL BE DESIGNED WITH CONTRACTOR AND SHOWN IN SUBSEQUENT SUBMITTAL
AESTHETIC TREATMENT B	7,800 FT	LED LINEAR LIGHTING DESIGN 8'-0" O.C.; ACCLAIM FLEXTUBE OR EQUAL
AESTHETIC TREATMENT C	62	FLOOD LIGHTS FOR COLUMNS ADJACENT TO ROADWAY; TWO LIGHTS PER COLUMN; COLOR KINETICS COLORBURST POWERCORE OR EQUAL
INTEGRAL COLORED CONCRETE	250,000 SF	INTEGRAL COLORED CONCRETE; BLACK OR DARK GRAY
OWNER FURNISHED, CONTRACTOR INSTALLED ART INSTALLATION	23,300 SF	ART INTERVENTION TO BE COORDINATED BY METRO ART AND CONTRACTOR; ART INTERVENTION SHALL BE SHOWN IN SUBSEQUENT SUBMITTAL

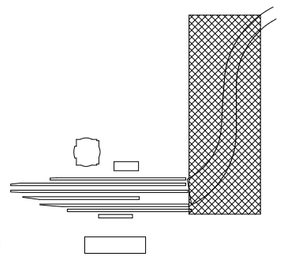

KEY PLAN

35% DESIGN PLANS
NOT FOR CONSTRUCTION

GENERAL NOTES

1. EXISTING PASSENGER TUNNEL TO REMAIN IN SERVICE. CONTRACTOR TO PROVIDE PEDESTRIAN PROTECTION AGAINST ANY AND ALL HAZARDS. PEDESTRIAN PROTECTION SHALL CONFORM TO ALL REGULATIONS.
2. FOR LEVEL DATUMS, SEE CIVIL DRAWINGS.
3. FOR DETAILS OF FIRE ACCESS ROAD, SEE CIVIL DRAWINGS.
4. FOR DETAILS OF TRACK ALIGNMENT, SEE TRACK DRAWINGS.
5. FOR DETAILS OF LINK US VIADUCT OVER US - 101, SEE OFF-SITE STRUCTURAL DRAWINGS.
6. VERIFY ALL DIMENSIONS OF LINK US VIADUCT OVER US-101 WITH OFF-SITE STRUCTURES.
7. STEEL TRUSS MUST BE FABRICATED PER CALTRANS SPECIFICATIONS, DESIGNED WITH GENERAL CONTRACTOR AND SHOWN IN SUBSEQUENT SUBMITTAL.
8. BRIDGE AESTHETIC TREATMENT MUST ADHERE TO THE CALIFORNIA DEPARTMENT OF TRANSPORTATION CONSTRUCTION MANUAL 2019.
9. BRIDGE AESTHETIC TREATMENT MUST ADHERE TO CALIFORNIA'S MUTCD 2014.
10. VISUAL IMPACT ASSESSMENT (VIA) LEVEL MUST BE EVALUATED AND SHOWN IN SUBSEQUENT SUBMITTAL.
11. BRIDGE AESTHETIC TREATMENT MUST ADHERE TO THE CALIFORNIA ENVIRONMENTAL QUALITY ACT (CEQA) AND THE NATIONAL ENVIRONMENTAL POLICY ACT (NEPA).
12. CONTRACTOR TO INSTALL LED LINEAR LIGHT FIXTURE WITHOUT CURVATURE OR DEVIATION FROM ITS LINEAR PATH IN ANY DIRECTION.
13. HIGHWAY LIGHTING NOT SHOWN FOR CLARITY, TO BE PROVIDED PER CALTRANS SPECIFICATIONS IN SUBSEQUENT SUBMITTAL.

Preliminary

Original plan submittal made in Aug. 2019

THE PREPARATION OF THIS DRAWING HAS BEEN FINANCED IN PART THROUGH A GRANT FROM THE U.S. DEPARTMENT OF TRANSPORTATION, FEDERAL TRANSIT ADMINISTRATION (fta), UNDER THE FEDERAL TRANSIT ACT OF 1964, AS AMENDED, AND IN PART BY THE TAXES OF THE CITIZENS OF LOS ANGELES COUNTY AND OF THE STATE OF CALIFORNIA

Rev No.	Date	Description
1	3/21	Plan added to set
2	12/21	
3	6/22	

DESIGNED BY M. MAH
DRAWN BY M. PERROS
CHECKED BY M. RAMIREZ
IN CHARGE T. KIM
DATE 3/05/2021

Metro
LOS ANGELES COUNTY
METROPOLITAN TRANSPORTATION AUTHORITY

VIA, INC.
975 S. FAIR OAKS AVENUE
PASADENA, CA 91105
(213) 972-8700

HDR ENGINEERING
350 S GRAND AVENUE
SUITE 2900
LOS ANGELES, CA 90071
(213) 239-6800

SUBMITTED: _____ PROJECT MANAGER

APPROVED: _____

LINK UNION STATION PROJECT
ARCHITECTURAL DRAWINGS
LAUS VIADUCT OVER US-101 - DETAILS AND SCHEDULE

CONTRACT NO.
DRAWING NO. AB-801
REV. 0
SCALE AS NOTED
SHEET NO. 81

5/12/2020 11:13:03 AM C:\HSD\17-AA-LUS-ZZ02\CONTAINER_PHASE_A\411_DPERROS.rvt

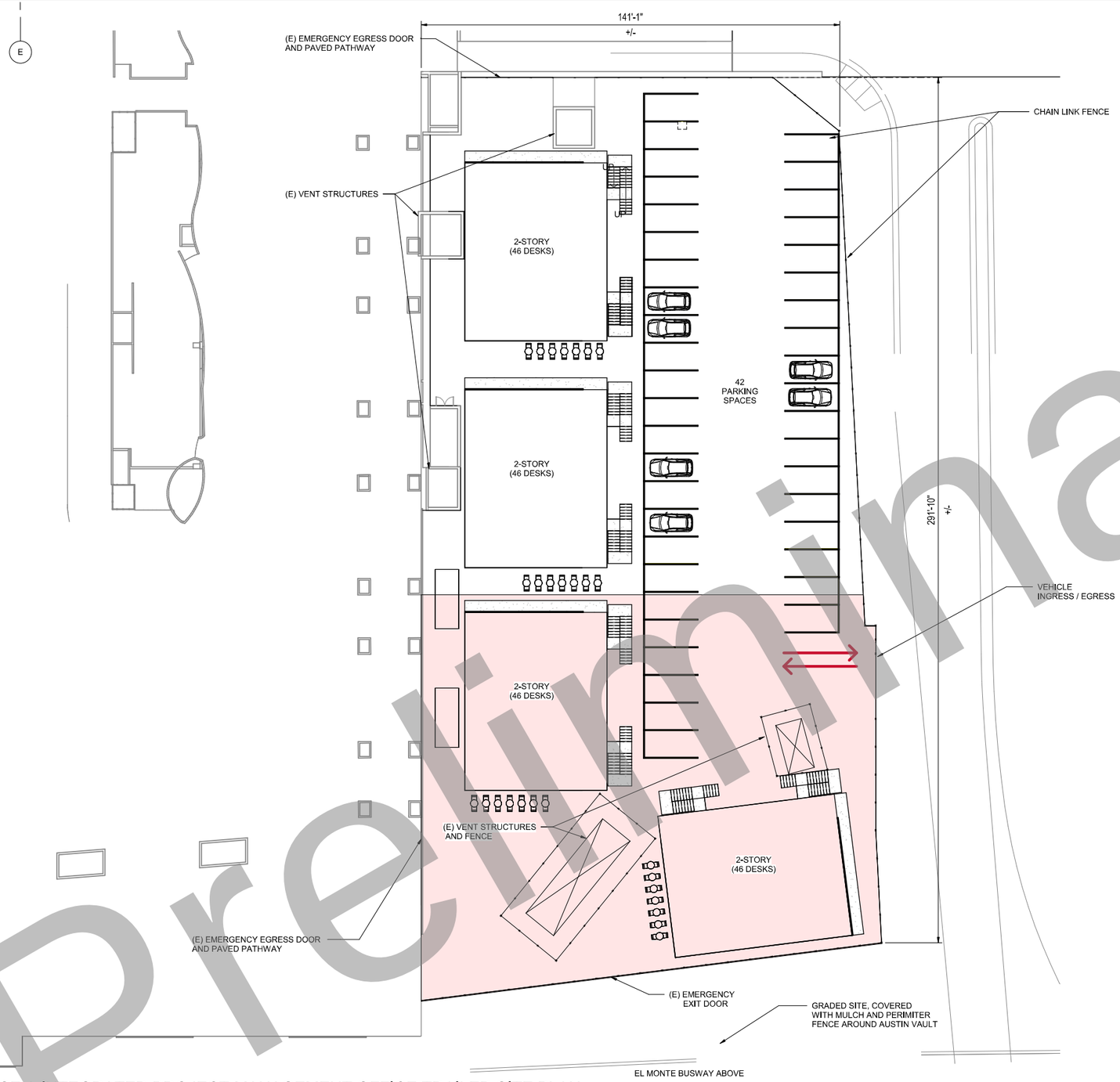

GENERAL NOTES:

1. EXISTING (E) VENTS, EMERGENCY EGRESS DOORS FROM THE PARKING GARAGE, AND PAVED EGRESS PATHS TO REMAIN IN PLACE.
2. A MINIMUM OF 42 PARKING STALLS SHALL BE PROVIDED. ADDITIONAL ON SITE PARKING MAY BE AVAILABLE PUNDER THE BUSWAY.

LEGEND:

GENERAL CONTRACTOR ZONE

Preliminary

PHASE A INTEGRATED PROJECT MANAGEMENT OFFICE TRAILER SITE PLAN

1" = 20'-0"

Original plan submittal made in Aug. 2019

35% DESIGN PLANS
NOT FOR CONSTRUCTION

THE PREPARATION OF THIS DRAWING HAS BEEN FINANCED IN PART THROUGH A GRANT FROM THE U.S. DEPARTMENT OF TRANSPORTATION, FEDERAL TRANSIT ADMINISTRATION (fta), UNDER THE FEDERAL TRANSIT ACT OF 1964, AS AMENDED, AND IN PART BY THE TAXES OF THE CITIZENS OF LOS ANGELES COUNTY AND OF THE STATE OF CALIFORNIA

Rev No.	Date	Description
1	3/21	Plan added to set
2	12/21	
3	6/22	

DESIGNED BY M. MAH
DRAWN BY O.YOUNG
CHECKED BY B. BRANDLE
IN CHARGE T. KIM
DATE 3/05/2021

Metro
LOS ANGELES COUNTY METROPOLITAN TRANSPORTATION AUTHORITY

HDR

SUBMITTED: _____ PROJECT MANAGER
APPROVED: _____

LINK UNION STATION PROJECT
ARCHITECTURAL DRAWINGS

SITE PLAN

CONTRACT NO.
DRAWING NO. AX-100
REV. 0
SCALE AS NOTED
SHEET NO. 82

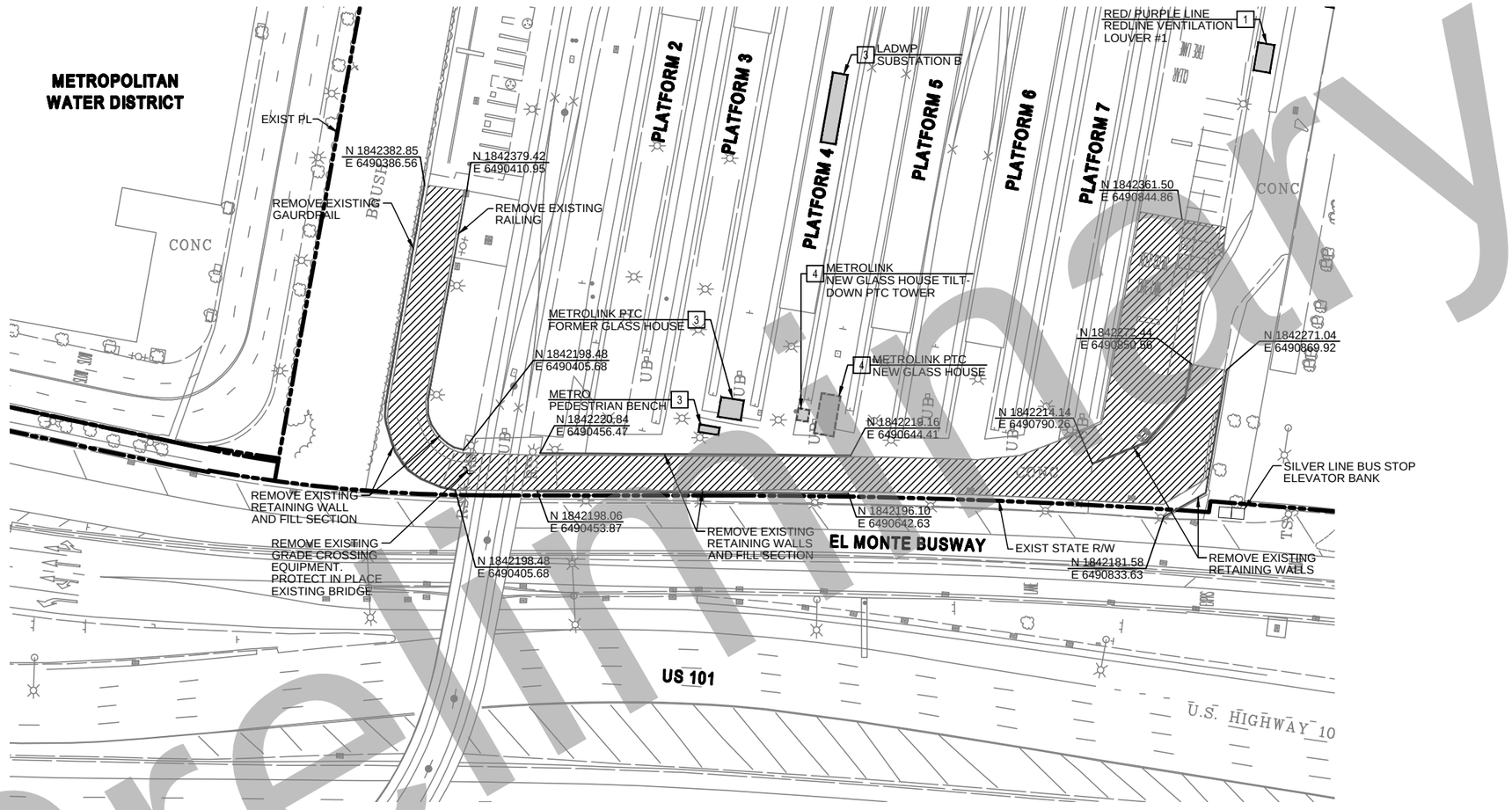

DISPOSITION NOTES:

1. PROTECT IN PLACE
2. ADJUST
3. REMOVE
4. RELOCATE (LOCATION TO BE DETERMINED)

LEGEND:

- EXISTING BUILDING / STRUCTURE
- BUILDING / STRUCTURE TO BE RELOCATED
- EXISTING PAVEMENT SECTION TO BE REMOVED

40 0 40 80

1"=40'

35% DESIGN PLANS
NOT FOR CONSTRUCTION

Preliminary

Original plan submittal made in Aug. 2019

Rev No.	Date	Description
1	3/21	
2	12/21	
3	6/22	

THE PREPARATION OF THIS DRAWING HAS BEEN FINANCED IN PART THROUGH A GRANT FROM THE U.S. DEPARTMENT OF – TRANSPORTATION, FEDERAL TRANSI ADMINISTRATION (FTA), UNDER THE FEDERAL TRANSIT ACT OF 1964, A AMENDED, AND IN PART BY THE TAXES OF THE CITIZENS OF LOS ANGELES COUNTY AND OF THE STATE OF CALIFORNIA.

DESIGNED BY: J. RIMORIN
DRAWN BY: R. VENEGAS
CHECKED BY: J. RIMORIN
IN CHARGE: T. KIM
DATE: 8/01/2019

Metro
LOS ANGELES COUNTY
METROPOLITAN TRANSPORTATION AUTHORITY
V&A INC. 975 S. FAIR OAKS AVE. PASADENA, CA 91105 213.972.9700
HDR ENGINEERING 350 S. GRAND AVENUE SUITE 2500 LOS ANGELES, CA 90071 (213) 239-5800

SUBMITTED: _____ PROJECT MANAGER

APPROVED: _____

LINK UNION STATION PROJECT

EXISTING FACILITIES REMOVAL AND DISPOSITION PLAN SHEET 1 OF 1

CONTRACT NO:
DRAWING NO: CD-101
REV:
SCALE: 1" = 40'
SHEET NO: 83

7/31/2019 4:29:56 PM USER = RVENEGAS
C:\PWWORKING\SACD1004847\LUS-CD-101.DWG

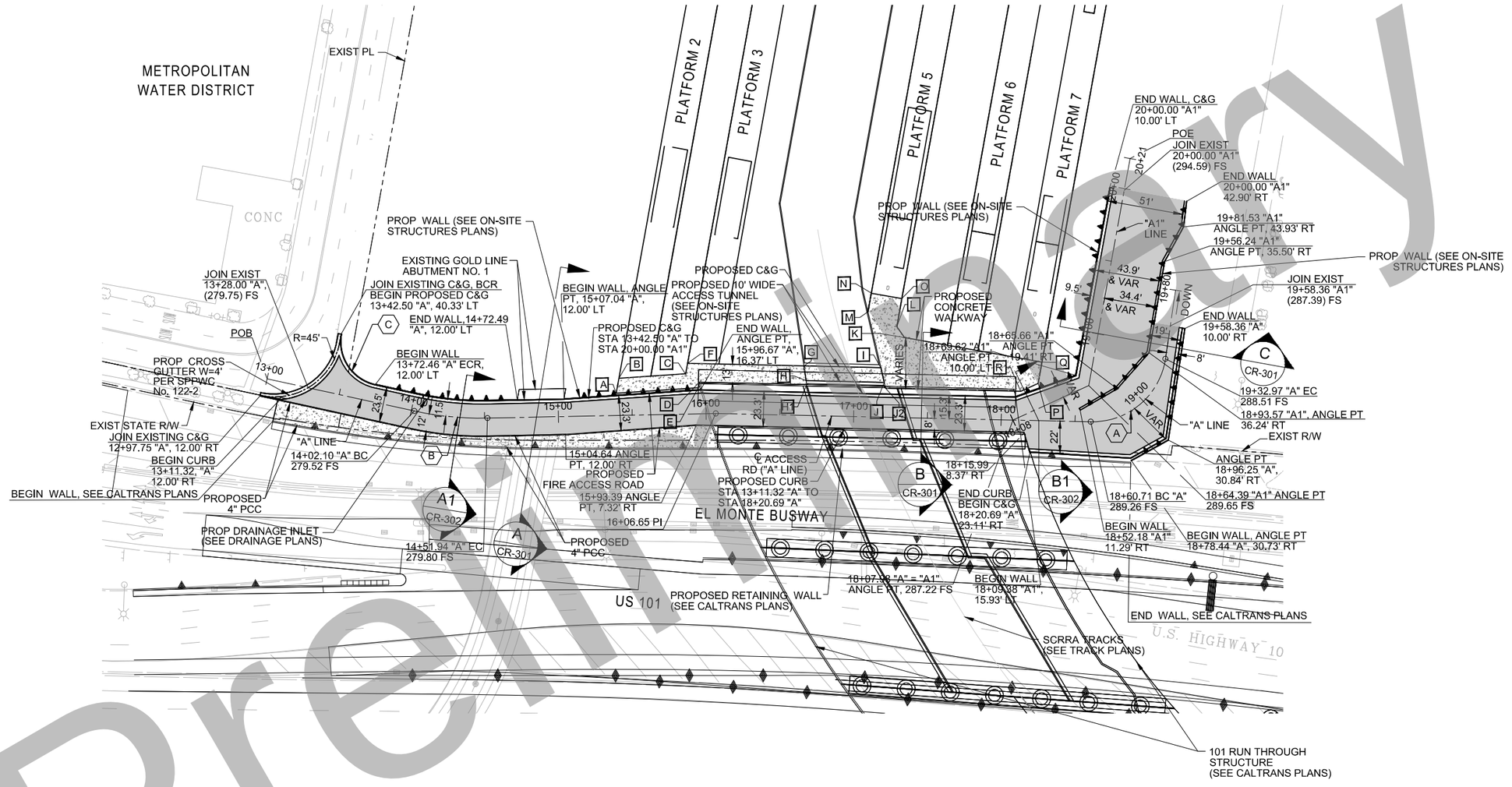

LEGEND

PROPOSED AREA (AC PAVEMENT)

PROPOSED WALKWAY (CONCRETE PAVEMENT)

CURVE DATA TABLE				
No.	RADIUS	DELTA	LENGTH	TANGENT
A	50.00'	82° 48' 17"	72.26'	44.08'
B	212.00'	13° 28' 08"	49.83'	25.03'
C	30.00'	87° 45' 34"	45.95'	28.85'

DATA TABLE		
No.	NORTHING	EASTING
A	1842227.18	6490484.70
B	1842237.33	6490486.53
C	1842240.39	6490531.80
D	1842234.64	6490540.93
E	1842230.94	6490540.26
F	1842247.47	6490533.06
G	1842245.74	6490611.87
H	1842235.70	6490613.40
H1	1842233.03	6490613.81
I	1842244.53	6490663.94
J	1842234.47	6490666.27
J2	1842230.51	6490667.18
K	1842264.86	6490679.94
L	1842272.24	6490674.80
M	1842282.32	6490655.23
N	1842294.97	6490657.52
O	1842291.27	6490678.17
P	1842233.84	6490770.56
Q	1842248.18	6490773.12
R	1842228.49	6490758.82

40 0 40 80

1"=40'

3/05/2021

35% DESIGN PLANS
NOT FOR CONSTRUCTION

Preliminary

Original plan submittal made in Aug. 2019

Rev No.	Date	Description
1	3/21	Added data table
2	12/21	
3	6/22	

THE PREPARATION OF THIS DRAWING HAS BEEN FINANCED IN PART THROUGH A GRANT FROM THE U.S. DEPARTMENT OF TRANSPORTATION, FEDERAL TRANSIT ADMINISTRATION (FTA), UNDER THE FEDERAL TRANSIT ACT OF 1964, AS AMENDED, AND IN PART BY THE TAXES OF THE CITIZENS OF LOS ANGELES COUNTY AND OF THE STATE OF CALIFORNIA.

DESIGNED BY J. RIMORIN
DRAWN BY R. VENEGAS
CHECKED BY J. RIMORIN
IN CHARGE T. KIM
DATE

Metro
LOS ANGELES COUNTY METROPOLITAN TRANSPORTATION AUTHORITY
V&A INC. 975 S. FAIR OAKS AVE. PASADENA, CA 91105 213.972.9700
HDR ENGINEERING 350 S. GRAND AVENUE SUITE 2000 LOS ANGELES, CA 90071 (213) 228-0600

SUBMITTED: _____ PROJECT MANAGER

APPROVED: _____

LINK UNION STATION PROJECT

ON-SITE CIVIL PLAN

CONTRACT NO

DRAWING NO CR-101 REV

SCALE 1" = 40'

SHEET NC 84

3/19/2020 11:12:38 AM USER = JRIMORIN
C:\PWWORKING\SACD1004847\LUS-CR-101.DWG

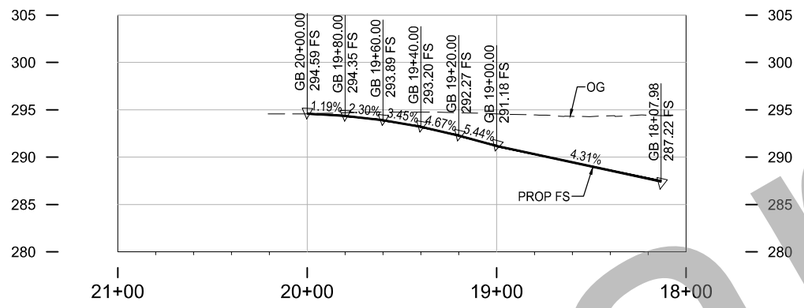

ACCESS ROAD TO PLATFORMS ("A1" LINE)

HORIZ: 1" = 40'
VERT: 1" = 8'

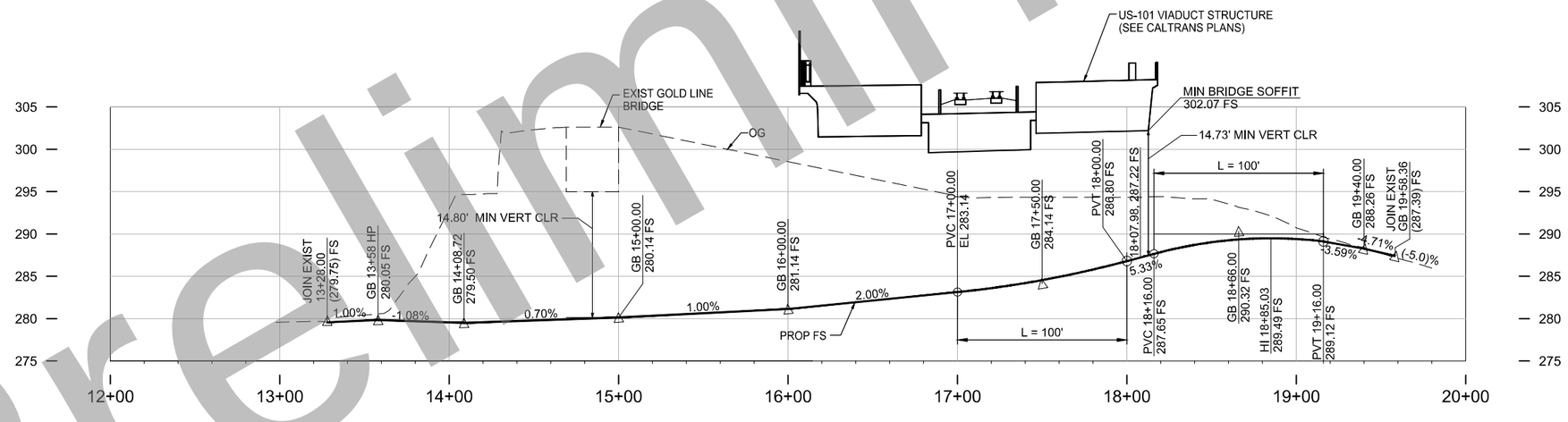

ACCESS ROAD ALONG ABUTMENT / EL MONTE BUSWAY ("A" LINE)

HORIZ: 1" = 40'
VERT: 1" = 8'

Preliminary

35% DESIGN PLANS
NOT FOR CONSTRUCTION

Original plan submittal made in Aug. 2019

THE PREPARATION OF THIS DRAWING HAS BEEN FINANCED IN PART THROUGH A GRANT FROM THE U.S. DEPARTMENT OF TRANSPORTATION, FEDERAL TRANSIT ADMINISTRATION (FTA), UNDER THE FEDERAL TRANSIT ACT OF 1964, AS AMENDED, AND IN PART BY THE TAXES OF THE CITIZENS OF LOS ANGELES COUNTY AND OF THE STATE OF CALIFORNIA.

Rev No.	Date	Description
1	3/21	
2	12/21	
3	6/22	

DESIGNED BY: J. RIMORIN
DRAWN BY: R. VENEGAS
CHECKED BY: J. RIMORIN
IN CHARGE: T. KIM
DATE: 8/01/2019

LOS ANGELES COUNTY
METROPOLITAN TRANSPORTATION AUTHORITY

V&A INC.
975 S. FAIR OAKS AVE.
PASADENA, CA 91105
213.972.9700

HDR ENGINEERING
350 S. GRAND AVENUE
SUITE 2600
LOS ANGELES, CA 90071
(213) 259-5800

SUBMITTED: _____ PROJECT MANAGER

APPROVED: _____

LINK UNION STATION PROJECT

ON-SITE CIVIL
ACCESS ROAD PROFILE

CONTRACT NO
DRAWING NO: CR-201
REV
SCALE: HORIZ: 1" = 40'
VERT: 1" = 8'
SHEET NO: 85

3/19/2020 10:59:06 AM USER = JRIMORIN
C:\PWWORKING\SACD\1004847\LUS-CR-201.DWG

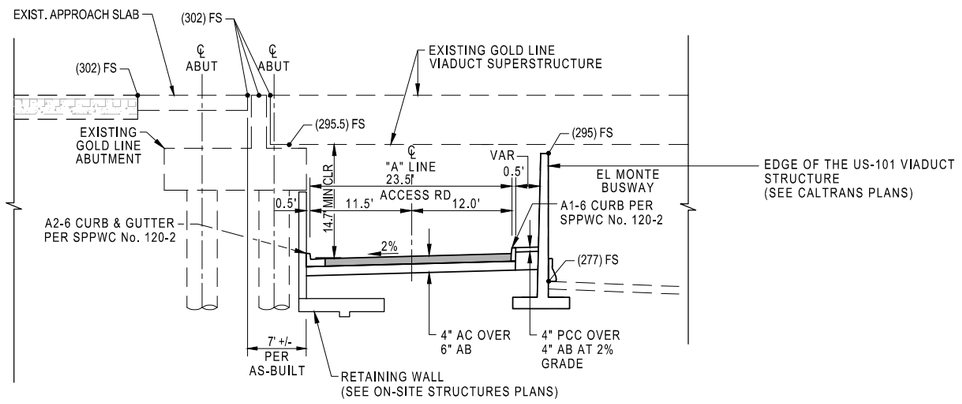

SECTION A-A
N.T.S.

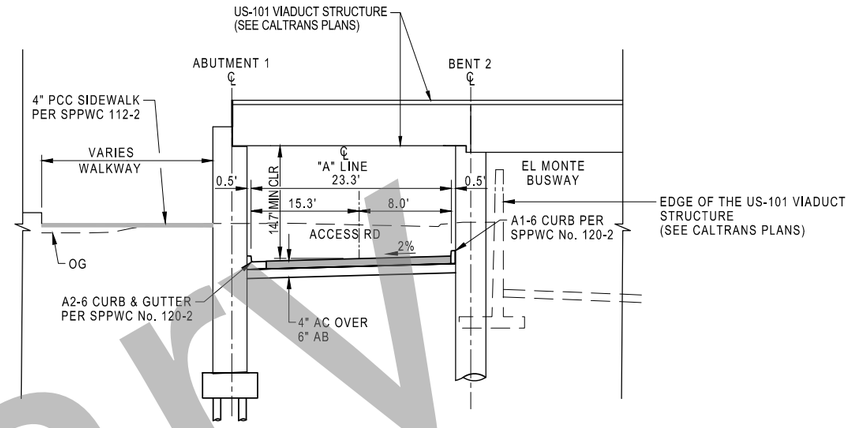

SECTION B-B
N.T.S.

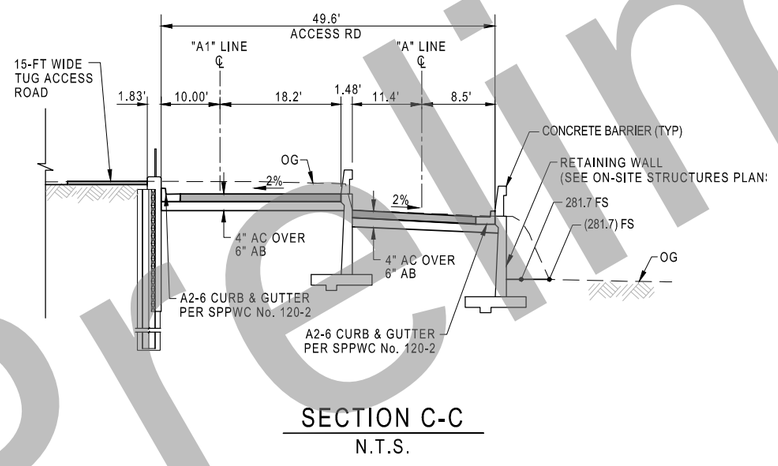

SECTION C-C
N.T.S.

Preliminary

35% DESIGN PLANS
NOT FOR CONSTRUCTION

Original plan submittal made in Aug. 2019

THE PREPARATION OF THIS DRAWING HAS BEEN FINANCED IN PART THROUGH A GRANT FROM THE U.S. DEPARTMENT OF TRANSPORTATION, FEDERAL TRANSIT ADMINISTRATION (FTA), UNDER THE FEDERAL TRANSIT ACT OF 1964, AS AMENDED, AND IN PART BY THE TAXES OF THE CITIZENS OF LOS ANGELES COUNTY AND OF THE STATE OF CALIFORNIA.

Rev No.	Date	Description
1	3/21	Additional retaining wall details shown
2	12/21	
3	6/22	

DESIGNED BY J. RIMORIN
DRAWN BY R. VENEGAS
CHECKED BY J. RIMORIN
IN CHARGE T. KIM
DATE [redacted]

Metro
LOS ANGELES COUNTY METROPOLITAN TRANSPORTATION AUTHORITY

V&A INC.
975 S. FAIR OAKS AVE.
PASADENA, CA 91105
213.972.9700

HDR ENGINEERING
350 S. GRAND AVENUE
SUITE 2600
LOS ANGELES, CA 90071
(213) 259-5000

SUBMITTED: _____ PROJECT MANAGER
APPROVED: _____

LINK UNION STATION PROJECT
ON-SITE CIVIL
CROSS SECTIONS - SHEET 1 OF 2

CONTRACT NO
DRAWING NO CR-301
REV
SCALE NO SCALE
SHEET NO 86

4/30/2020 11:58:21 AM USER = JRIMORIN
C:\PWWORKING\SACD\100484711\US-CR-301.DWG

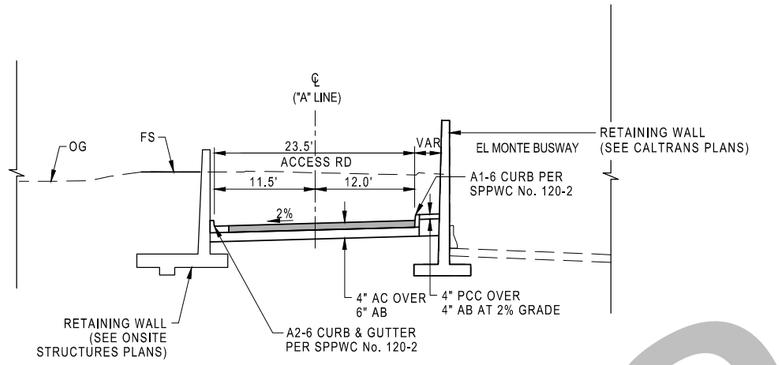

SECTION A1-A1
N.T.S.

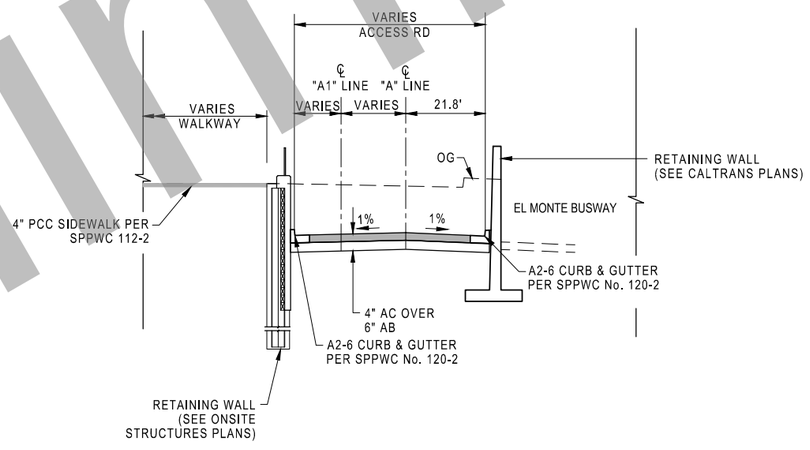

SECTION B1-B1
N.T.S.

Preliminary

35% DESIGN PLANS
NOT FOR CONSTRUCTION

Original plan submittal made in Aug. 2019

THE PREPARATION OF THIS DRAWING HAS BEEN FINANCED IN PART THROUGH A GRANT FROM THE U.S. DEPARTMENT OF TRANSPORTATION, FEDERAL TRANSIT ADMINISTRATION (FTA), UNDER THE FEDERAL TRANSIT ACT OF 1964, AS AMENDED, AND IN PART BY THE TAXES OF THE CITIZENS OF LOS ANGELES COUNTY AND OF THE STATE OF CALIFORNIA.

Rev No.	Date	Description
1	3/21	Additional retaining wall details shown
2	12/21	
3	6/22	

DESIGNED BY J. RIMORIN
DRAWN BY R. VENEGAS
CHECKED BY J. RIMORIN
IN CHARGE T. KIM
DATE

Metro
LOS ANGELES COUNTY
METROPOLITAN TRANSPORTATION AUTHORITY

V&A INC.
975 S. FAIR OAKS AVE.
PASADENA, CA 91105
213.972.9700

HDR ENGINEERING
350 S. GRAND AVENUE
SUITE 3900
LOS ANGELES, CA 90071
(213) 259-5000

SUBMITTED: _____ PROJECT MANAGER
APPROVED: _____

LINK UNION STATION PROJECT
ON-SITE CIVIL
CROSS SECTIONS - SHEET 2 OF 2

CONTRACT NO
DRAWING NO CR-302
REV
SCALE NO SCALE
SHEET NO 87

3/19/2020 10:41:10 AM USER = JRIMORIN
C:\PWWORKING\SAC\D1004847TL\US-CR-302.DWG

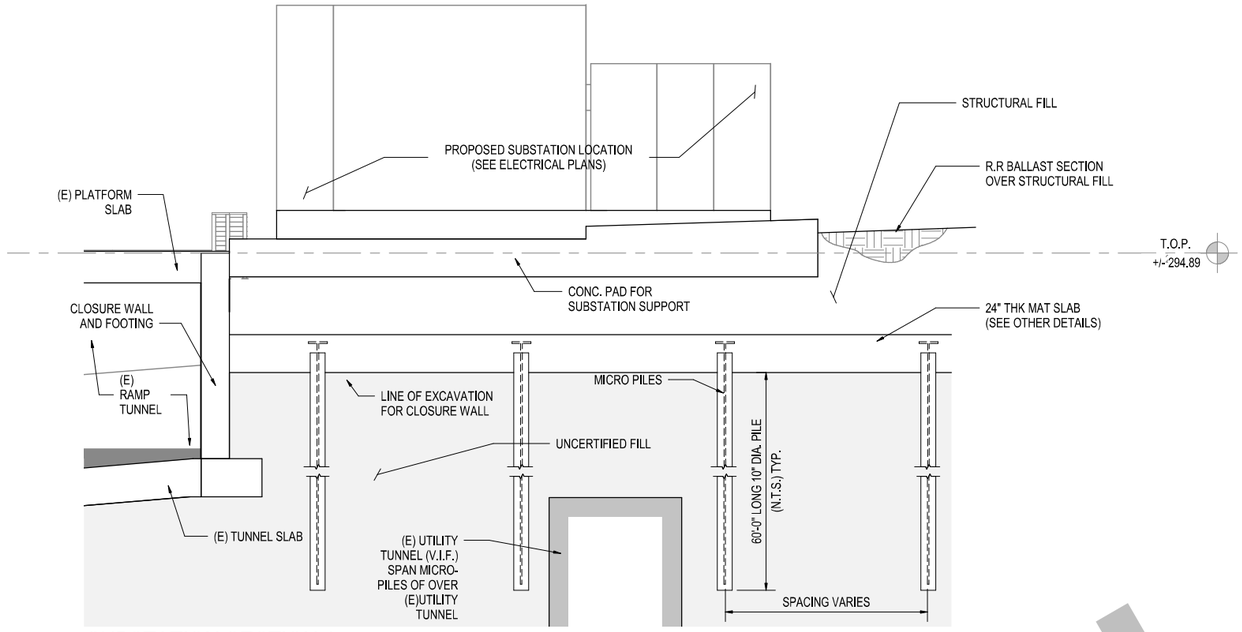

1 S-301 SUBSTATION SECTION 1
1/4" = 1'-0"
0' 2' 4' 8'

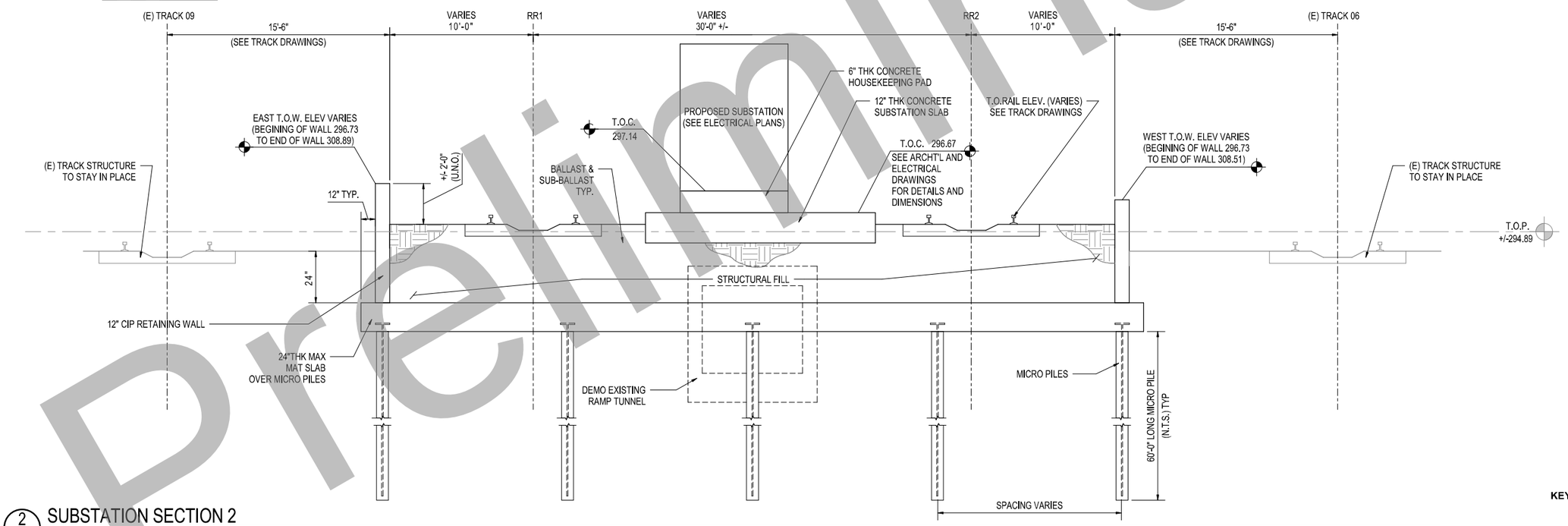

2 S-301 SUBSTATION SECTION 2
1/4" = 1'-0"
0' 2' 4' 8'

NOTES

1. SEE TRACK PLANS FOR DETAILS ON TRACK RELATED ITEMS SHOWN
2. SEE TRACK PLANS FOR REMOVAL OF EXISTING TRACKS

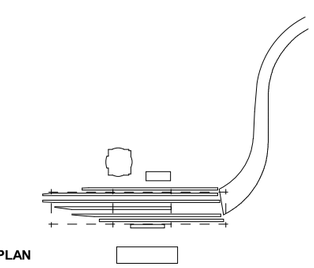

KEY PLAN

35% DESIGN PLANS
NOT FOR CONSTRUCTION

Preliminary

Original plan submittal made in Aug. 2019

THE PREPARATION OF THIS DRAWING HAS BEEN FINANCED IN PART THROUGH A GRANT FROM THE U.S. DEPARTMENT OF TRANSPORTATION, FEDERAL TRANSIT ADMINISTRATION (fta), UNDER THE FEDERAL TRANSIT ACT OF 1964, AS AMENDED, AND IN PART BY THE TAXES OF THE CITIZENS OF LOS ANGELES COUNTY AND OF THE STATE OF CALIFORNIA

Rev No.	Date	Description
1	3/21	
2	12/21	
3	6/22	

DESIGNED BY A. QUINONEZ
DRAWN BY A. NAHMGOONG
CHECKED BY Y. NAM
IN CHARGE T. KIM
DATE 8/01/2019

Metro
LOS ANGELES COUNTY
METROPOLITAN TRANSPORTATION AUTHORITY

VCA ENGINEERS INC.
2151 Michelson Dr. #240
Irvine, CA 92612
Tel. 949.679.0870
Fax. 949.679.9370
Project No. C184

HDR ENGINEERING
350 S GRAND AVENUE
SUITE 2900
LOS ANGELES, CA 90071
(213) 239-6800

SUBMITTED: _____ PROJECT MANAGER
APPROVED: _____

LINK UNION STATION PROJECT
ON-SITE STRUCTURAL DRAWINGS
RETAINING WALL SECTIONS AT PLATFORM

CONTRACT NO.
DRAWING NO. S-301
REV. 0
SCALE AS NOTED
SHEET NO. 88

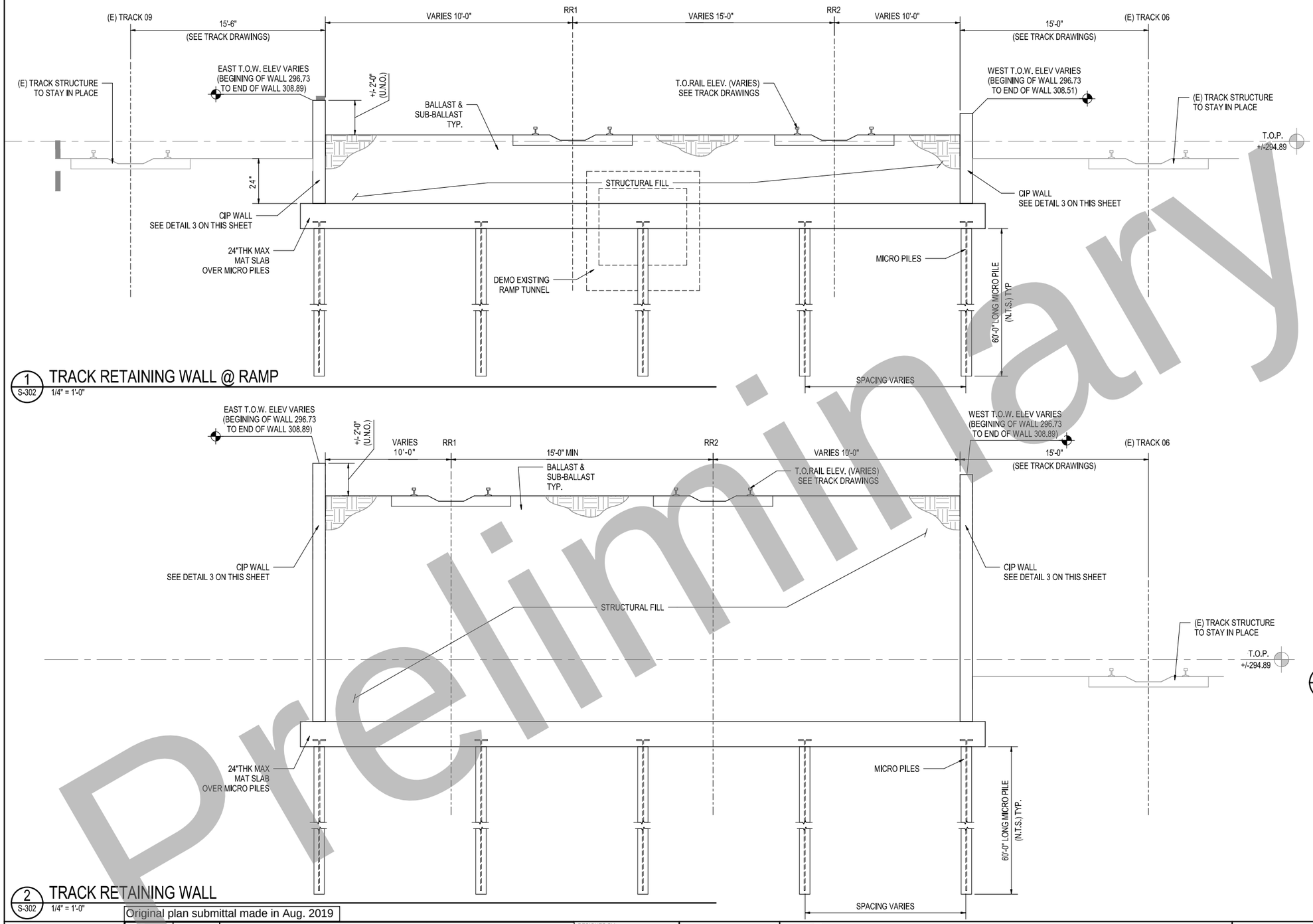

1 S-302 TRACK RETAINING WALL @ RAMP
1/4" = 1'-0"

2 S-302 TRACK RETAINING WALL
1/4" = 1'-0"

NOTES

1. SEE TRACK PLANS FOR DETAILS ON TRACK RELATED ITEMS SHOWN
2. SEE TRACK PLANS FOR REMOVAL OF EXISTING TRACKS

WALL INFO						
HT MAX	HT1	W1	HT2	W2	HT3	W3
8'-0"	8'-0"	12"	-	-	-	-
12'-0"	6'-0"	18"	6'-0"	12"	-	-
16'-0"	6'-0"	24"	4'-0"	18"	6'-0"	12"

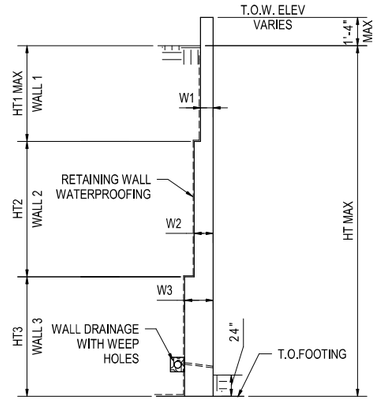

3 S-302 TYP RETAINING WALLS
NTS

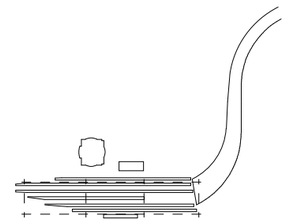

KEY PLAN

35% DESIGN PLANS
NOT FOR CONSTRUCTION

Original plan submittal made in Aug. 2019

Preliminary

THE PREPARATION OF THIS DRAWING HAS BEEN FINANCED IN PART THROUGH A GRANT FROM THE U.S. DEPARTMENT OF TRANSPORTATION, FEDERAL TRANSIT ADMINISTRATION (fta). UNDER THE FEDERAL TRANSIT ACT OF 1964, AS AMENDED, AND IN PART BY THE TAXES OF THE CITIZENS OF LOS ANGELES COUNTY AND OF THE STATE OF CALIFORNIA

Rev No.	Date	Description
1	3/21	
2	12/21	
3	6/22	

DESIGNED BY: A. QUINONEZ
DRAWN BY: A. NAHMGOONG
CHECKED BY: Y. NAM
IN CHARGE: T. KIM
DATE: 8/01/2019

Metro
LOS ANGELES COUNTY METROPOLITAN TRANSPORTATION AUTHORITY
VCA ENGINEERS INC
2151 Michelson Dr. #240
Irvine, CA 92612
Tel. 949.679.0870
Fax. 949.679.9370
Project No. C184
HDR ENGINEERING
350 S GRAND AVENUE SUITE 2900
LOS ANGELES, CA 90071
(213) 239-6800

SUBMITTED: _____ PROJECT MANAGER
APPROVED: _____

LINK UNION STATION PROJECT
ON-SITE STRUCTURAL DRAWINGS

RETAINING WALL SECTIONS AT TRACK

CONTRACT NO.
DRAWING NO. S-302
REV. 0
SCALE: AS NOTED
SHEET NO. 89

C:\Users\nahmgoong\Documents\AA-LUS-2020-SHEET_CONTAINER_CAN\DP1-A17_-sgit.asanas@coseng.com.rvt
3/17/2020 7:20:56 PM

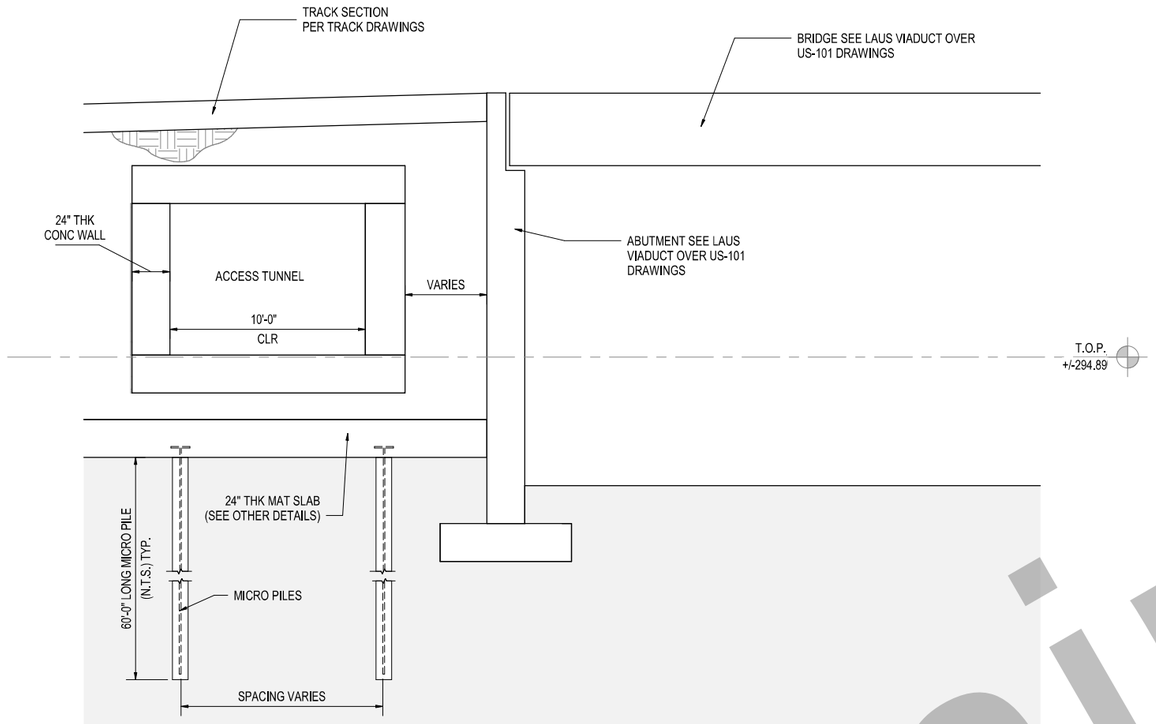

1 S-303 ACCESS TUNNEL SECTION

1/4" = 1'-0"

NOTES

1. SEE TRACK PLANS FOR DETAILS ON TRACK RELATED ITEMS SHOWN
2. SEE TRACK PLANS FOR REMOVAL OF EXISTING TRACKS

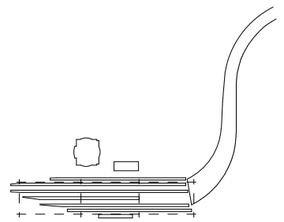

KEY PLAN

35% DESIGN PLANS
NOT FOR CONSTRUCTION

Preliminary

Original plan submittal made in Aug. 2019

THE PREPARATION OF THIS DRAWING HAS BEEN FINANCED IN PART THROUGH A GRANT FROM THE U.S. DEPARTMENT OF TRANSPORTATION, FEDERAL TRANSIT ADMINISTRATION (fta), UNDER THE FEDERAL TRANSIT ACT OF 1964, AS AMENDED, AND IN PART BY THE TAXES OF THE CITIZENS OF LOS ANGELES COUNTY AND OF THE STATE OF CALIFORNIA

Rev No.	Date	Description
1	3/21	Updated access tunnel location shown
2	12/21	
3	6/22	

DESIGNED BY	A. QUINONEZ
DRAWN BY	A. NAHMGOONG
CHECKED BY	Y. NAM
IN CHARGE	T. KIM
DATE	3/05/2021

Metro
LOS ANGELES COUNTY
METROPOLITAN TRANSPORTATION AUTHORITY

VCA ENGINEERS, INC
2151 Michelson Dr. #240
Irvine, CA 92612
Tel. 949.679.0870
Fax. 949.679.9370
Project No. C184

HDR ENGINEERING
350 S GRAND AVENUE
SUITE 2900
LOS ANGELES, CA 90071
(213) 239-6800

SUBMITTED: _____ PROJECT MANAGER

APPROVED: _____

LINK UNION STATION PROJECT
ON-SITE STRUCTURAL DRAWINGS

ACCESS TUNNEL SECTION

CONTRACT NO.	
DRAWING NO.	S-303
REV.	0
SCALE	AS NOTED
SHEET NO.	90

3/17/2020 7:20:56 PM C:\Users\hmahmgoong\Documents\AA-LUS-ZZ\Sheet_Z_CONTAINER_CANOPY-ART1_wgt.aaonan@dcsteng.com.vt

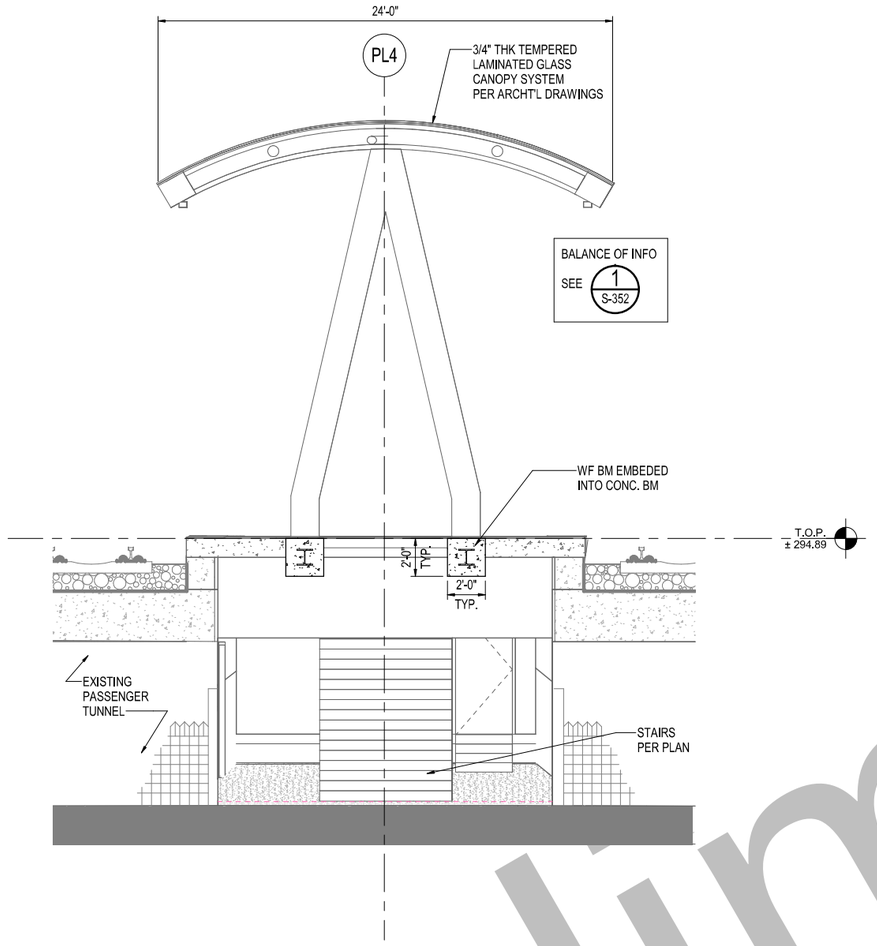

2 S-352 PASSAGEWAY SECTION
1/4" = 1'-0"
0' 2' 4' 8'

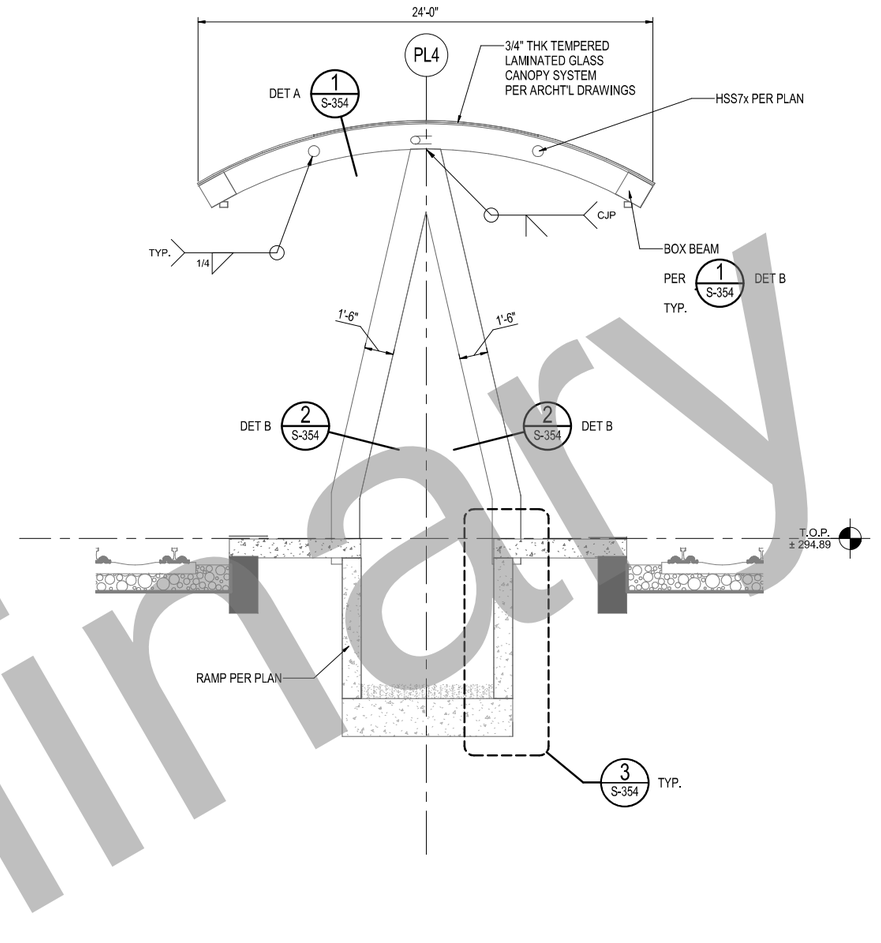

1 S-352 PASSAGEWAY SECTION @ RAMP WALL
1/4" = 1'-0"
0' 2' 4' 8'

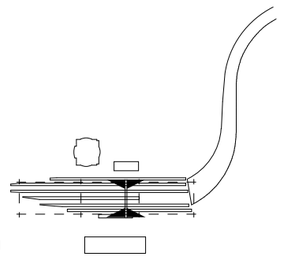

KEY PLAN

35% DESIGN PLANS
NOT FOR CONSTRUCTION

Preliminary

Original plan submittal made in Aug. 2019

Rev No.	Date	Description
1	3/21	Plan added to set
2	12/21	
3	6/22	

THE PREPARATION OF THIS DRAWING HAS BEEN FINANCED IN PART THROUGH A GRANT FROM THE U.S. DEPARTMENT OF TRANSPORTATION, FEDERAL TRANSIT ADMINISTRATION (fta), UNDER THE FEDERAL TRANSIT ACT OF 1964, AS AMENDED, AND IN PART BY THE TAXES OF THE CITIZENS OF LOS ANGELES COUNTY AND OF THE STATE OF CALIFORNIA

DESIGNED BY A. QUINONEZ
DRAWN BY A. NAHMGOONG
CHECKED BY Y. NAM
IN CHARGE T. KIM
DATE 3/05/2021

Metro
LOS ANGELES COUNTY METROPOLITAN TRANSPORTATION AUTHORITY
V C A ENGINEERS, INC.
2151 Michelson Dr., #240
Irvine, CA 92612
Tel. 949.679.0870
Fax. 949.679.9370
Project No. C184
HDR ENGINEERING
350 S GRAND AVENUE SUITE 2900
LOS ANGELES, CA 90071
(213) 228-6800

SUBMITTED: _____ PROJECT MANAGER
APPROVED: _____

LINK UNION STATION PROJECT
ON-SITE STRUCTURAL DRAWINGS

PLATFORM SECTION

CONTRACT NO.
DRAWING NO. S-352
REV. 0
SCALE AS NOTED
SHEET NO. 91

© V I A & Y Engineers\V & Y Projects\C184 - I-238 Metro\Union Station\Submittals\Contract Plans\35%\DGN\C184_S_PH4SE_A4R17.rvt
3/17/2020 7:23:27 PM

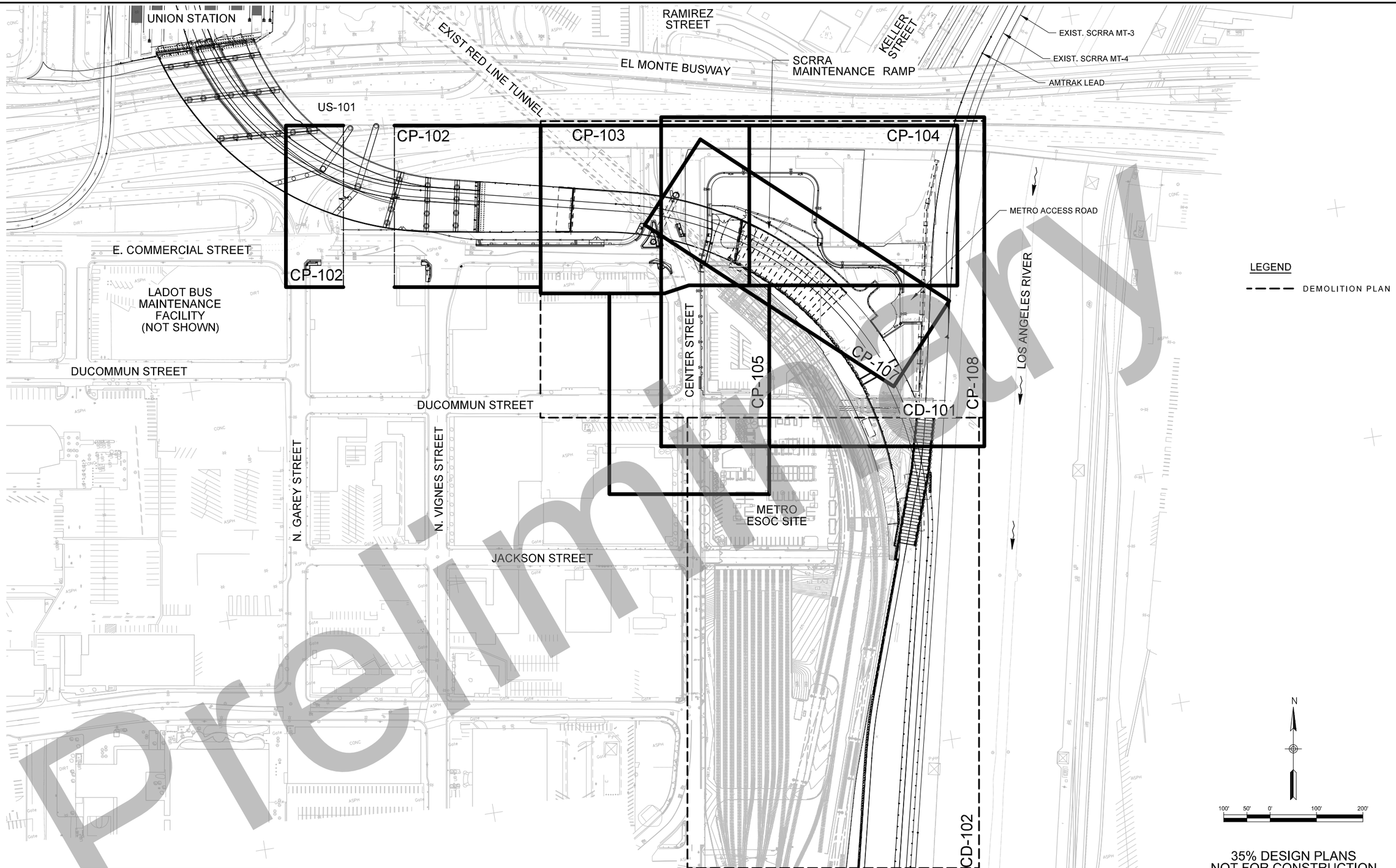

Original plan submittal made in Aug. 2019

Rev No.	Date	Description
1	3/21	
2	12/21	
3	6/22	Updated to reflect new/revised sheets

THE PREPARATION OF THIS DRAWING HAS BEEN FINANCED IN PART THROUGH A GRANT FROM THE U.S. DEPARTMENT OF TRANSPORTATION, FEDERAL TRANSIT ADMINISTRATION (FTA), UNDER THE FEDERAL TRANSIT ACT OF 1964, AS AMENDED, AND IN PART BY THE TAXES OF THE CITIZENS OF LOS ANGELES COUNTY AND OF THE STATE OF CALIFORNIA.

DESIGNED BY K. WARFIELD
DRAWN BY K. WARFIELD
CHECKED BY M. COOLEY
IN CHARGE T. KIM
DATE 6/01/2022

REGISTERED PROFESSIONAL ENGINEER — No. EXP. — CIVIL — STATE OF CALIFORNIA

Metro
LOS ANGELES COUNTY
METROPOLITAN TRANSPORTATION AUTHORITY

HDR
HDR ENGINEERING
350 S. GRAND AVENUE
SUITE 2900
LOS ANGELES, CA 90071
(213) 239-5800

SUBMITTED: _____ PROJECT MANAGER

APPROVED: _____

LINK UNION STATION PROJECT
ROADWAY IMPROVEMENTS
ROADWAY KEY MAP

CONTRACT NO
DRAWING NO CP-003
REV
SCALE 1"=100'
SHEET NO 92

35% DESIGN PLANS
NOT FOR CONSTRUCTION

preliminary

Plot Driver=$PLTDRVS$ Pentable=PlotStamp.tbl USER = KWARFIEL 10:00:27 AM 4/15/2022 $FILE$

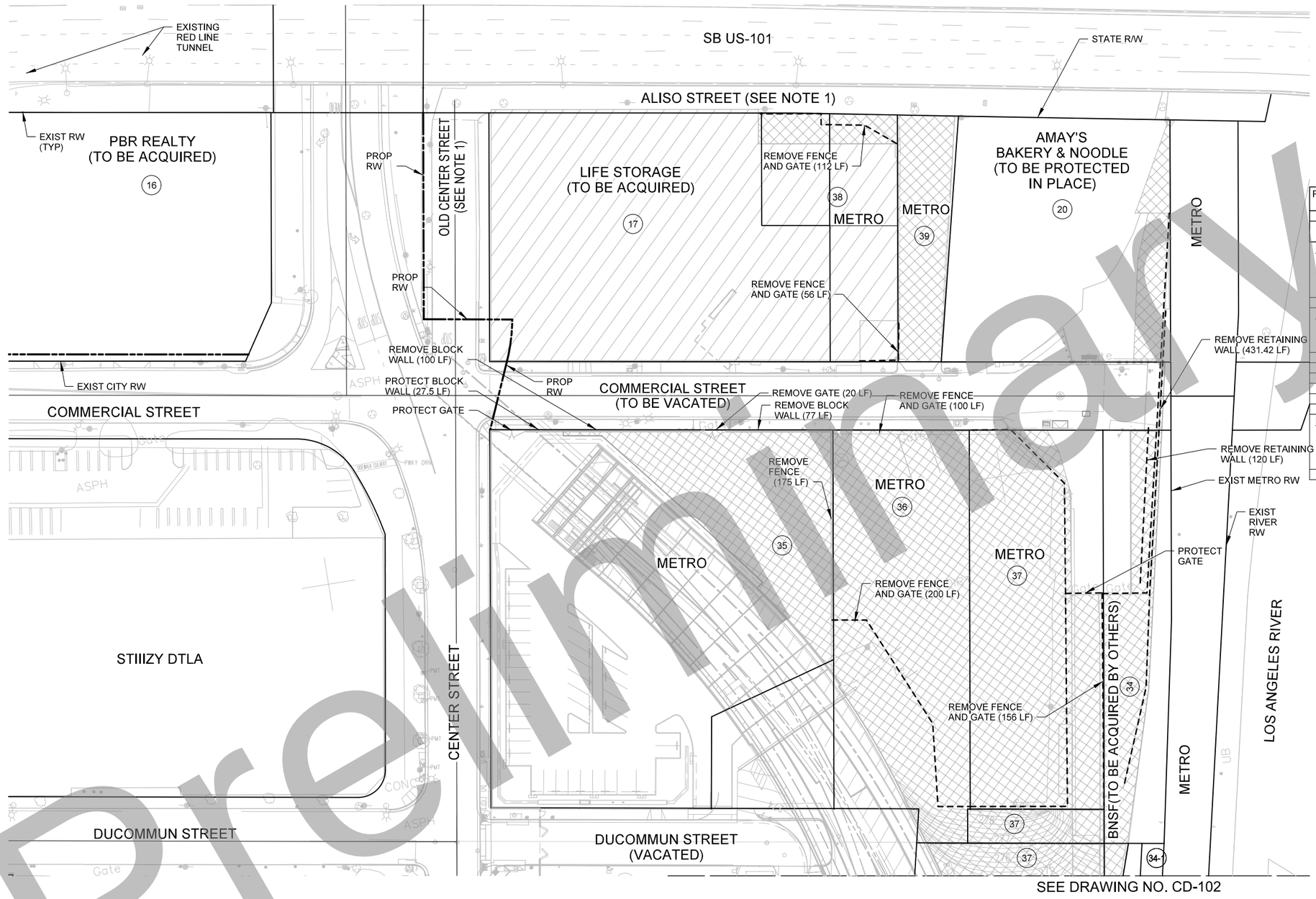

PARCEL I.D	APN	SITE ADDRESS	BUILDING(S) TO BE DEMOLISHED
16.	5173-018-001	703 E COMMERCIAL ST	NONE
17.	5173-019-006	801 E COMMERCIAL ST	MULTIPLE STORY, 3 BUILDINGS SLAB ON GRADE
BUILDING DESCRIPTION: BUSINESS: MULTIPLE STORAGE UNITS - LIFE STORAGE 3 CONNECTED BUILDINGS - 1. 2 STORY CONCRETE, BRICK; 2. 3 STORY CONCRETE, BRICK; 3. 2 STORY REINFORCED CONCRETE			
20.	5173-019-011	837 E COMMERCIAL ST	PROTECT IN PLACE
BUILDING DESCRIPTION: BUSINESS: MANUFACTURING/WAREHOUSE - AMAY'S BAKERY & NOODLE 1 STORY REINFORCED CONCRETE			
34.	5173-020-813	N/A	NONE
34-1.	5173-021-811	N/A	NONE
35	5173-020-913	820 E COMMERCIAL ST	NONE
36	5173-020-907	840 E COMMERCIAL ST	NONE
37	5173-020-813	846 E COMMERCIAL ST	NONE
38	5173-019-901	827 E COMMERCIAL ST	3 SINGLE STORY BUILDINGS
BUILDING DESCRIPTION: BUSINESS: STORAGE/WAREHOUSE - METRO 3 BUILDINGS: 1. SMALL CONCRETE BLOCK; 2. REINFORCED CONCRETE; 3. REINFORCED CONCRETE			
39	5173-019-903	831 E COMMERCIAL ST	AC PAVE - PRIVATE STREET

NOTES:
1. OLD CENTER STREET TO BE VACATED AND REMOVED NORTH OF STA. 14+13.04, SEE SHEET CP-103. EXISTING ALISO STREET TO BECOME PART OF ACCESS ROAD SERVING AMAY'S BAKERY PROPERTY.

35% DESIGN PLANS
NOT FOR CONSTRUCTION

Preliminary

Original plan submittal made in Aug. 2019

THE PREPARATION OF THIS DRAWING HAS BEEN FINANCED IN PART THROUGH A GRANT FROM THE U.S. DEPARTMENT OF TRANSPORTATION, FEDERAL TRANSIT ADMINISTRATION (FTA), UNDER THE FEDERAL TRANSIT ACT OF 1964, AS AMENDED, AND IN PART BY THE TAXES OF THE CITIZENS OF LOS ANGELES COUNTY AND OF THE STATE OF CALIFORNIA.

Rev No.	Date	Description
1	3/21	Plan added to set
2	12/21	
3	6/22	Updated to reflect new/revised sheets

DESIGNED BY K. WARFIELD
DRAWN BY K. WARFIELD
CHECKED BY M. COOLEY
IN CHARGE T. KIM
DATE 6/01/2022

REGISTERED PROFESSIONAL ENGINEER — No. ____ Exp. ____ CIVIL — STATE OF CALIFORNIA

Metro
LOS ANGELES COUNTY METROPOLITAN TRANSPORTATION AUTHORITY
HDR
350 S. GRAND AVENUE SUITE 2900 LOS ANGELES, CA 90071 (213) 239-5800

SUBMITTED: _____ PROJECT MANAGER
APPROVED: _____

LINK UNION STATION PROJECT
ROADWAY IMPROVEMENTS CIVIL DEMOLITION PLAN SHEET 1 OF 2

CONTRACT NO
DRAWING NO CD-101
REV
SCALE 1"=40'
SHEET NO 93

$FILE$ 5/25/2022 2:19:53 PM USER = KWARFIEL Pentable=PlotStamp.tbl Plot Driver=$PLTDRV$

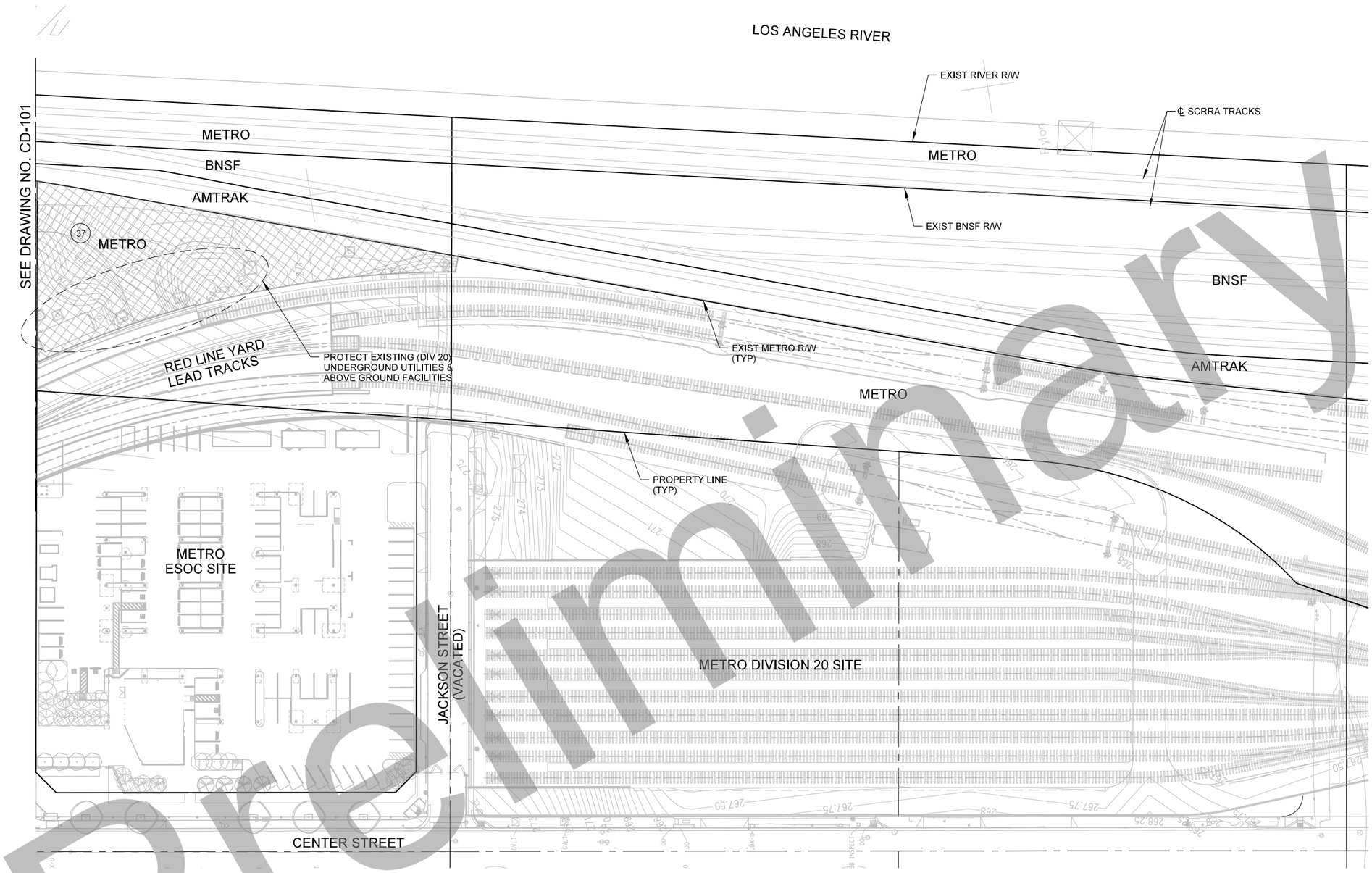

LEGEND:

- (XX) PARCEL DESIGNATION
- RIGHT OF WAY / PROPERTY LINE
- REMOVE EXISTING PRIVATE PROPERTY SITE IMPROVEMENTS
- DEMOLISH EXISTING BUILDING

PARCEL I.D	APN	SITE ADDRESS	BUILDING(S) TO BE DEMOLISHED
37	5173-020-813	N/A	NONE

N

40 0 40 80

1"=40'

35% DESIGN PLANS
NOT FOR CONSTRUCTION

Preliminary

Original plan submittal made in Aug. 2019

THE PREPARATION OF THIS DRAWING HAS BEEN FINANCED IN PART THROUGH A GRANT FROM THE U.S. DEPARTMENT OF TRANSPORTATION, FEDERAL TRANSIT ADMINISTRATION (FTA), UNDER THE FEDERAL TRANSIT ACT OF 1964, AS AMENDED, AND IN PART BY THE TAXES OF THE CITIZENS OF LOS ANGELES COUNTY AND OF THE STATE OF CALIFORNIA.

Rev No.	Date	Description
1	3/21	Plan added to set
2	12/21	
3	6/22	Minor updates

DESIGNED BY K. WARFIELD
DRAWN BY O. MAUSS
CHECKED BY M. COOLEY
IN CHARGE T. KIM
DATE [redacted]

REGISTERED PROFESSIONAL ENGINEER — No. ____ Exp. ____ CIVIL — STATE OF CALIFORNIA

Metro
LOS ANGELES COUNTY
METROPOLITAN TRANSPORTATION AUTHORITY
HDR
350 S. GRAND AVENUE
SUITE 2900
LOS ANGELES, CA 90071
(213) 239-5800

SUBMITTED: _____ PROJECT MANAGER

APPROVED: _____

LINK UNION STATION PROJECT
ROADWAY IMPROVEMENTS
CIVIL DEMOLITION PLAN
SHEET 2 OF 2

CONTRACT NO
DRAWING NO CD-102 REV
SCALE 1"=40'
SHEET NO 94

$FILE$
3/3/2022
USER = KWARFIEL 1:54:17 PM
Pentable=PlotStamp.tbl
Plot Driver=$PLTDRV$$

NOTES:

1. SEE UTILITY PLANS FOR EXIST AND PROPOSED UTILITIES.
2. SEE TRACK PLANS FOR TRACK RELATED WORK.
3. SEE STRUCTURES PLANS FOR BRIDGE AND RETAINING WALL WORK UNLESS SPECIFIED HEREIN.
4. ALL STREET SIGNS AND POSTS OR POLES TO BE REMOVED OR PROTECTED IN PLACE, ARE TO BE VERIFIED ON SIGNING STRIPING AND SIGNAL PLANS.
5. OLD CENTER STREET TO BE VACATED AND REMOVED NORTH OF STA 13+83.16. EXISTING ALISO STREET TO BECOME PART OF ACCESS ROAD SERVING AMAY'S BAKERY PROPERTY.
6. MINIMUM 4" CMB SHALL BE PLACED UNDERNEATH PROPOSED SIDEWALK AND CURB RAMPS. 6" CMB SHALL BE PLACED UNDERNEATH ALL CURBS AND DRIVEWAYS.
7. ALL CURB HEIGHTS SHALL BE 6" UNLESS OTHERWISE SPECIFIED

CONSTRUCTION SYMBOLS:

- CONSTRUCT
- EXISTING
- REMOVE
- REMODEL EXISTING
- REMOVE AND CONSTRUCT
- WORK BY OTHERS

CONSTRUCTION NOTES:

1	CONCRETE CURB
2	TYPE C INTEGRAL CURB & GUTTER
12	CONCRETE WALK
13	CURB RAMP
14	ASPHALT CONCRETE PAVEMENT
16	CRUSHED MISCELLANEOUS BASE
21	COLD PLANE (MILL) AC PAVEMENT
65	CHAIN LINK FENCE
77	SAWCUT LINE AND JOIN
177	CONCRETE MEDIAN

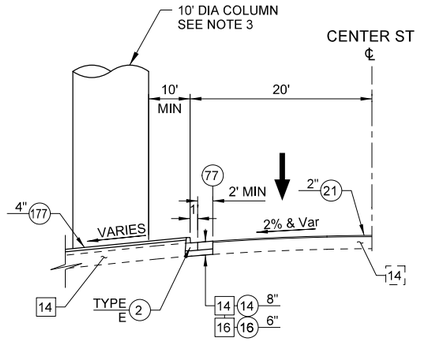

CENTER STREET
STA 13+69.71 TO STA 13+93.80

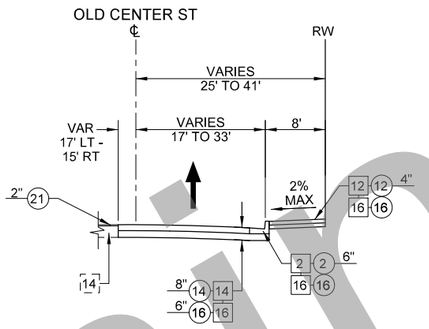

OLD CENTER STREET
STA 12+89.31 TO STA 13+83.16

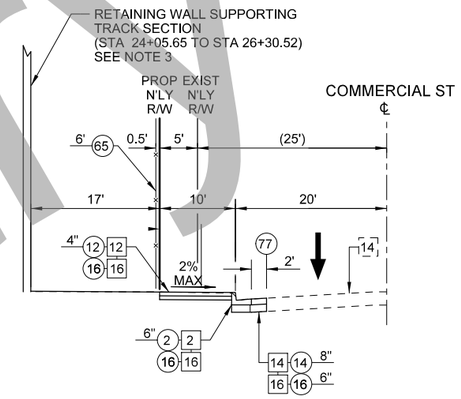

COMMERCIAL STREET
STA 24+17.72 TO STA 27+24.66

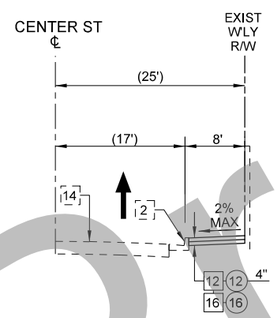

CENTER STREET
STA 10+24.92 TO STA 12+89.31

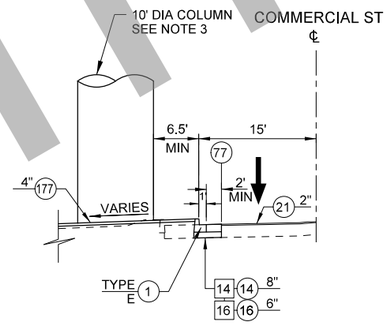

COMMERCIAL STREET
STA 27+71.74 TO STA 28+06.16

Preliminary

35% DESIGN PLANS
NOT FOR CONSTRUCTION

Original plan submittal made in Aug. 2019

Rev No.	Date	Description
1	3/21	Sections updated to reflect updated design shown on layouts
2	12/21	
3	6/22	Sections updated to reflect updated design shown on layouts

THE PREPARATION OF THIS DRAWING HAS BEEN FINANCED IN PART THROUGH A GRANT FROM THE U.S. DEPARTMENT OF TRANSPORTATION, FEDERAL TRANSIT ADMINISTRATION (FTA), UNDER THE FEDERAL TRANSIT ACT OF 1964, AS AMENDED, AND IN PART BY THE TAXES OF THE CITIZENS OF LOS ANGELES COUNTY AND OF THE STATE OF CALIFORNIA.

DESIGNED BY K. WARFIELD
DRAWN BY J. MAY
CHECKED BY M. COOLEY
IN CHARGE T. KIM
DATE [redacted]

REGISTERED PROFESSIONAL ENGINEER — No. ____ Exp. ____ CIVIL — STATE OF CALIFORNIA

Metro
LOS ANGELES COUNTY
METROPOLITAN TRANSPORTATION AUTHORITY

HDR ENGINEERING
350 S. GRAND AVENUE
SUITE 2900
LOS ANGELES, CA 90071
(213) 239-5800

SUBMITTED: _____ PROJECT MANAGER
APPROVED: _____

LINK UNION STATION PROJECT
ROADWAY IMPROVEMENTS
COMMERCIAL AND CENTER STREETS TYPICAL SECTIONS

CONTRACT NO
DRAWING NO CP-101 REV
SCALE NTS
SHEET NO 95

Plot Driver=$PLTDRVS$ Pentable=PlotStamp.tbl USER = KWARFIEL 1:04:20 PM 3/1/2022 $FILE$

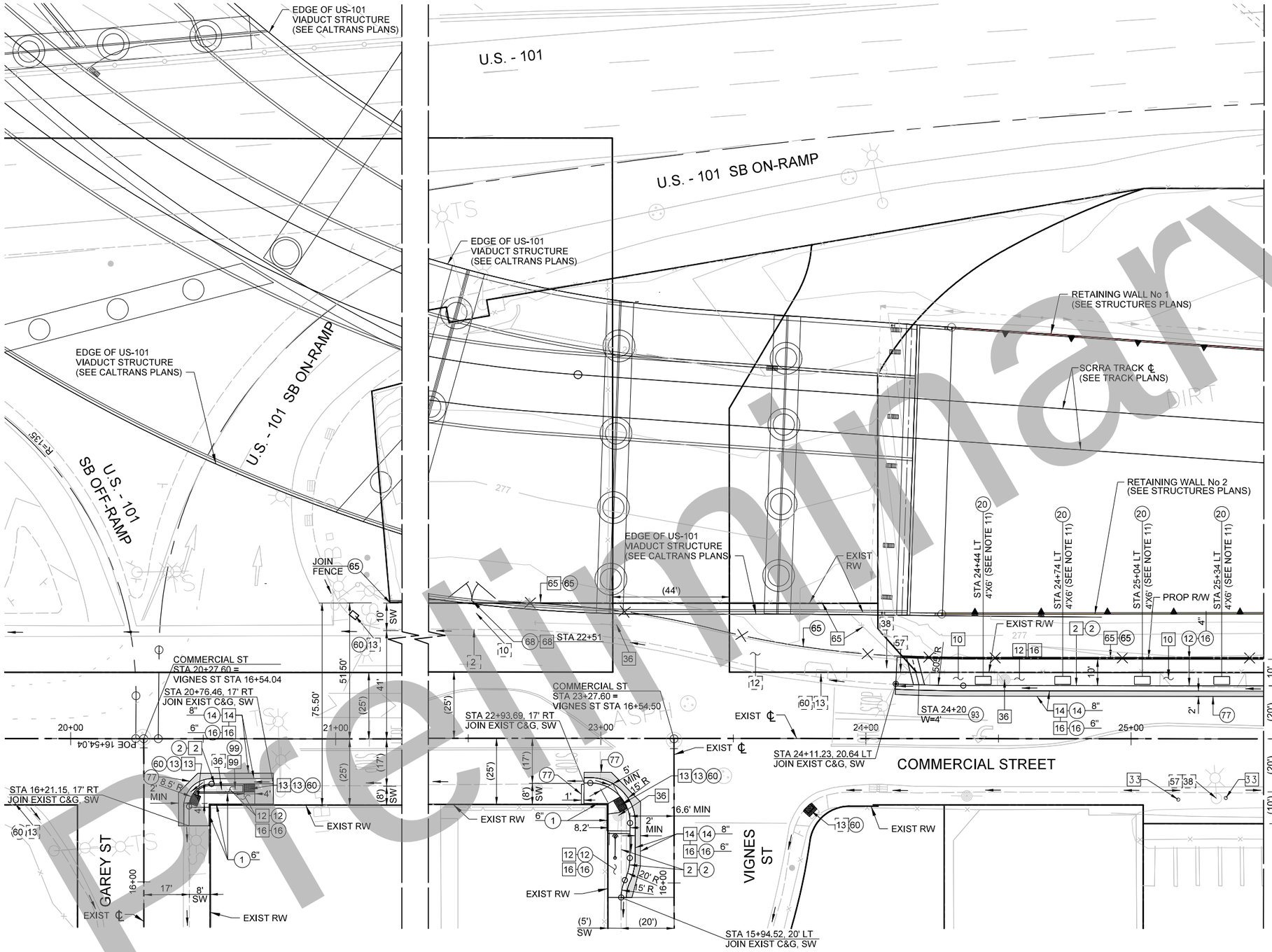

CONSTRUCTION SYMBOLS:

- CONSTRUCT
- REMODEL EXISTING
- EXISTING
- REMOVE AND CONSTRUCT
- REMOVE
- WORK BY OTHERS

LEGEND:

- AC PAVEMENT AREA

CONSTRUCTION NOTES:

1	CONCRETE CURB
2	TYPE C INTEGRAL CURB & GUTTER
10	CONCRETE DRIVEWAY
12	CONCRETE WALK
13	CURB RAMP
14	ASPHALT CONCRETE PAVEMENT
16	CRUSHED MISCELLANEOUS BASE
20	TREE
33	PARKING METER (SEE NOTE 10)
36	UTILITY POLE
37	POLE ANCHOR
38	STREET LIGHTING PULL BOX
47	STREET SIGN
57	STREET LIGHTING POLE
60	TRUNCATED DOMES
65	CHAIN LINK FENCE
68	CHAIN LINK GATE
70	SIGN AND POST
77	SAWCUT LINE & JOIN
93	SIDEWALK CULVERT WITH STEEL PLATE COVER
99	CURB OPENING CATCH BASIN
148	LIGHT POLE

NOTES:

1. SEE UTILITY PLANS FOR EXIST AND PROPOSED UTILITIES.
2. SEE TRACK PLANS FOR TRACK RELATED WORK.
3. SEE STRUCTURES PLANS FOR BRIDGE AND RETAINING WALL WORK UNLESS SPECIFIED HEREIN.
4. ALL STREET SIGNS AND POSTS OR POLES TO BE REMOVED OR PROTECTED IN PLACE ARE SHOWN ON SIGNING/STRIPING AND TRAFFIC SIGNAL PLANS.
5. OLD CENTER STREET TO BE VACATED AND REMOVED NORTH OF STA 13+83.16. EXISTING ALISO STREET TO BECOME PART OF ACCESS ROAD SERVING AMAY'S BAKERY PROPERTY.
6. MINIMUM 4" CMB SHALL BE PLACED UNDERNEATH PROPOSED SIDEWALK AND CURB RAMPS. 6" CMB SHALL BE PLACED UNDERNEATH ALL CURBS AND DRIVEWAYS.
7. SEE DRAINAGE PLANS FOR PROPOSED GRADING.
8. RELOCATION AND REMOVAL OF INTERFERING OVERHEAD AND UNDERGROUND ELECTRICAL INFRASTRUCTURE ASSUMED TO BE COMPLETED BY LADWP AHEAD OF ROADWAY CONSTRUCTION SHOWN HEREIN.
9. ALL CURB HEIGHTS SHALL BE 6" UNLESS OTHERWISE SPECIFIED
10. CONTRACTOR TO COORDINATE WITH LADOT TO REMOVE PARKING METERS PER PLAN. CALL (877) 215-3958
11. UNLESS OTHERWISE NOTED ON THESE PLANS, THE CONTRACTOR SHALL PLANT A MINIMUM OF 24-INCH BOX SIZE TREES OF SPECIES, QUANTITY, AND LOCATIONS APPROVED BY THE CITY OF LOS ANGELES PER STANDARD PLAN S-450-3, S-456 AND S-663. THE COVER SHALL BE DECOMPOSED GRANITE WHEN TREE WELL COVER IS NOT SPECIFIED ON THESE PLANS. LANDSCAPE CONSTRUCTION WITHIN THE PUBLIC RIGHT-OF-WAY SHALL CONFORM TO THE CITY'S LATEST PARKWAY LANDSCAPING GUIDELINES.

35% DESIGN PLANS
NOT FOR CONSTRUCTION

Preliminary

Original plan submittal made in Aug. 2019

THE PREPARATION OF THIS DRAWING HAS BEEN FINANCED IN PART THROUGH A GRANT FROM THE U.S. DEPARTMENT OF TRANSPORTATION, FEDERAL TRANSIT ADMINISTRATION (FTA), UNDER THE FEDERAL TRANSIT ACT OF 1964, AS AMENDED, AND IN PART BY THE TAXES OF THE CITIZENS OF LOS ANGELES COUNTY AND OF THE STATE OF CALIFORNIA.

Rev No.	Date	Description
1	3/21	Curb ramp/bulbout improvements added
2	12/21	
3	6/22	Updated bulbout design shown

DESIGNED BY K. WARFIELD
DRAWN BY J. MAY
CHECKED BY M. COOLEY
IN CHARGE T. KIM
DATE

REGISTERED PROFESSIONAL ENGINEER — No. — EXP. — CIVIL — STATE OF CALIFORNIA

Metro
LOS ANGELES COUNTY METROPOLITAN TRANSPORTATION AUTHORITY

HDR
HDR ENGINEERING
350 S. GRAND AVENUE SUITE 2900 LOS ANGELES, CA 90071 (213) 239-5800

SUBMITTED: _____ PROJECT MANAGER
APPROVED: _____

LINK UNION STATION PROJECT
ROADWAY IMPROVEMENTS
PUBLIC ROADWAY PLAN
SHEET 1 OF 4

CONTRACT NO
DRAWING NO CP-102 REV
SCALE 1"=20'
SHEET NO 96

Plot Driver=$PLTDRVS$ Pentable=PlotStamp.tbl USER = KWARFIEL 12:08:43 PM 4/15/2022 $FILE$

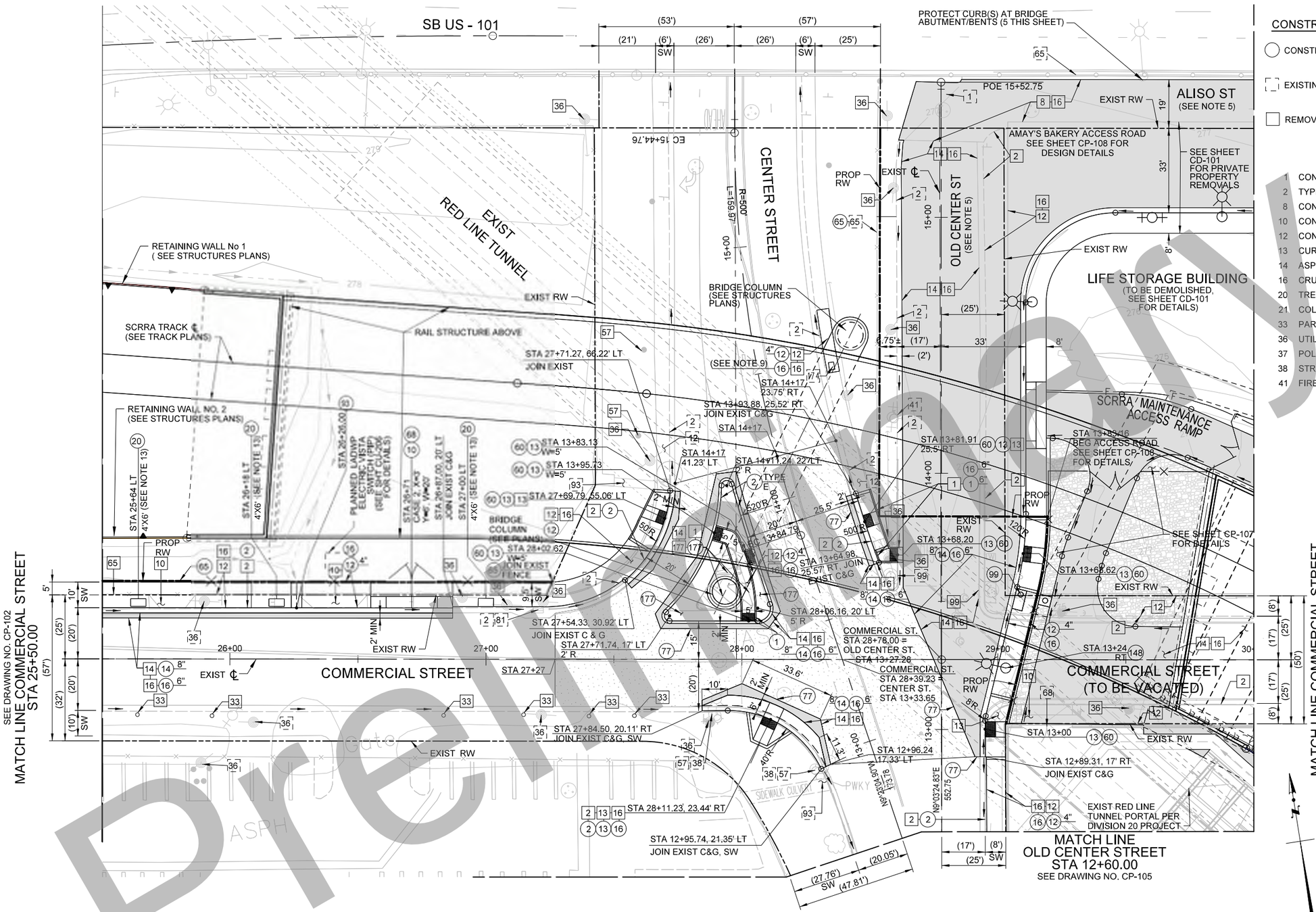

CONSTRUCTION SYMBOLS:

- CONSTRUCT
- EXISTING
- REMOVE
- REMODEL EXISTING
- REMOVE AND CONSTRUCT
- WORK BY OTHERS

LEGEND:

- AC PAVEMENT AREA
- 2" COLD PLANE (MILL) AC PAVEMENT (21) 2" AC PAVEMENT OVERLAY (14)
- ROCK BLANKET (SEE SHEET CP-107)

CONSTRUCTION NOTES:

1	CONCRETE CURB	47	STREET SIGN
2	TYPE C INTEGRAL CURB & GUTTER	57	STREET LIGHTING POLE
8	CONCRETE PAVEMENT	60	TRUNCATED DOMES
10	CONCRETE DRIVEWAY	63	GUY WIRE
12	CONCRETE WALK	65	CHAIN LINK FENCE
13	CURB RAMP	68	CHAIN LINK GATE
14	ASPHALT CONCRETE PAVEMENT	70	SIGN AND POST
16	CRUSHED MISCELLANEOUS BASE	77	SAWCUT LINE & JOIN
20	TREE	81	CURBSIDE GRATING BASIN
21	COLD PLANE (MILL) AC PAVEMENT	93	SIDEWALK CULVERT
33	PARKING METER (SEE NOTE 12)	99	SIDE OPENING CATCH BASIN
36	UTILITY POLE	148	LIGHT POLE
37	POLE ANCHOR	174	UNKNOWN VAULT
38	STREET LIGHTING PULL BOX	175	SHRUBS
41	FIRE HYDRANT	177	CONCRETE MEDIAN

NOTES:

1. SEE UTILITY PLANS FOR EXIST AND PROPOSED UTILITIES.
2. SEE TRACK PLANS FOR TRACK RELATED WORK.
3. SEE STRUCTURES PLANS FOR BRIDGE AND RETAINING WALL WORK UNLESS SPECIFIED HEREIN.
4. ALL STREET SIGNS AND POSTS OR POLES TO BE REMOVED OR PROTECTED IN PLACE, ARE TO BE VERIFIED ON SIGNING STRIPPING AND SIGNAL PLANS.
5. OLD CENTER STREET TO BE VACATED AND REMOVED NORTH OF STA 13+83.16. EXISTING ALISO STREET TO BECOME PART OF ACCESS ROAD SERVING AMAY'S BAKERY PROPERTY.
6. MINIMUM 4" CMB SHALL BE PLACED UNDERNEATH PROPOSED SIDEWALK AND CURB RAMPS. 6" CMB SHALL BE PLACED UNDERNEATH ALL CURBS AND DRIVEWAYS.
7. SEE DRAINAGE PLANS FOR PROPOSED GRADING.
8. RELOCATION AND REMOVAL OF INTERFERING OVERHEAD AND UNDERGROUND ELECTRICAL INFRASTRUCTURE ASSUMED TO BE COMPLETED BY LADWP AHEAD OF ROADWAY CONSTRUCTION SHOWN HEREIN.
9. REMOVE AND REPLACE IN KIND ANY INTERFERING PORTION OF EXISTING SIDEWALK
10. LONGITUDINAL SLOPE ALONG PED ACCESS RAMPS = 5%
11. ALL CURB HEIGHTS SHALL BE 6" UNLESS OTHERWISE SPECIFIED
12. CONTRACTOR TO COORDINATE WITH LADOT TO REMOVE PARKING METERS PER PLAN. CALL (877) 215-3958
13. UNLESS OTHER WISE NOTED ON THESE PLANS, THE CONTRACTOR SHALL PLANT A MINIMUM OF 24-INCH BOX SIZE TREES OF SPECIES, QUANTITY, AND LOCATIONS APPROVED BY THE CITY OF LOS ANGELES PER STANDARD PLAN S-450-3, S-456 AND S-663. THE COVER SHALL BE DECOMPOSED GRANITE WHEN TREE WELL COVER IS NOT SPECIFIED ON THESE PLANS. LANDSCAPE CONSTRUCTION WITHIN THE PUBLIC RIGHT-OF-WAY SHALLCONFORM TO THE CITY'S LATEST PARKWAY LANDSCAPING GUIDELINES.
14. SEE TRAFFIC PLANS FOR STRIPING AND SIGNAGE
15. ALL SURFACE UTILITY APPURTENANCES ALONG ALISO STREET, INCLUDING MANHOLES AND VALVE COVERS, TO BE ADJUSTED TO GRADE.

Preliminary

35% DESIGN PLANS
NOT FOR CONSTRUCTION

Original plan submittal made in Aug. 2019

Rev No.	Date	Description
1	3/21	Raised median in Center Street removed based on updated bridge design
2	12/21	Updated to show Commercial/Center intersection as 4-way stop
3	6/22	Updated Commercial/Center intersection and access road design shown

THE PREPARATION OF THIS DRAWING HAS BEEN FINANCED IN PART THROUGH A GRANT FROM THE U.S. DEPARTMENT OF TRANSPORTATION, FEDERAL TRANSIT ADMINISTRATION (FTA), UNDER THE FEDERAL TRANSIT ACT OF 1964, AS AMENDED, AND IN PART BY THE TAXES OF THE CITIZENS OF LOS ANGELES COUNTY AND OF THE STATE OF CALIFORNIA.

DESIGNED BY K. WARFIELD
DRAWN BY J. MAY
CHECKED BY M. COOLEY
IN CHARGE T. KIM
DATE

REGISTERED PROFESSIONAL ENGINEER — No. EXP. — CIVIL — STATE OF CALIFORNIA

Metro
LOS ANGELES COUNTY METROPOLITAN TRANSPORTATION AUTHORITY

HDR
HDR ENGINEERING
350 S. GRAND AVENUE
SUITE 2900
LOS ANGELES, CA 90071
(213) 239-5800

SUBMITTED: _____ PROJECT MANAGER
APPROVED: _____

LINK UNION STATION PROJECT
ROADWAY IMPROVEMENTS
PUBLIC ROADWAY PLAN
SHEET 2 OF 4

CONTRACT NO
DRAWING NO CP-103
REV
SCALE 1"=20'
SHEET NO 97

Plot Driver=$PLTDRVS$ Pentable=PlotStamp.tbl USER = KWARFIEL 9:21:41 AM 4/15/2022 $FILE$

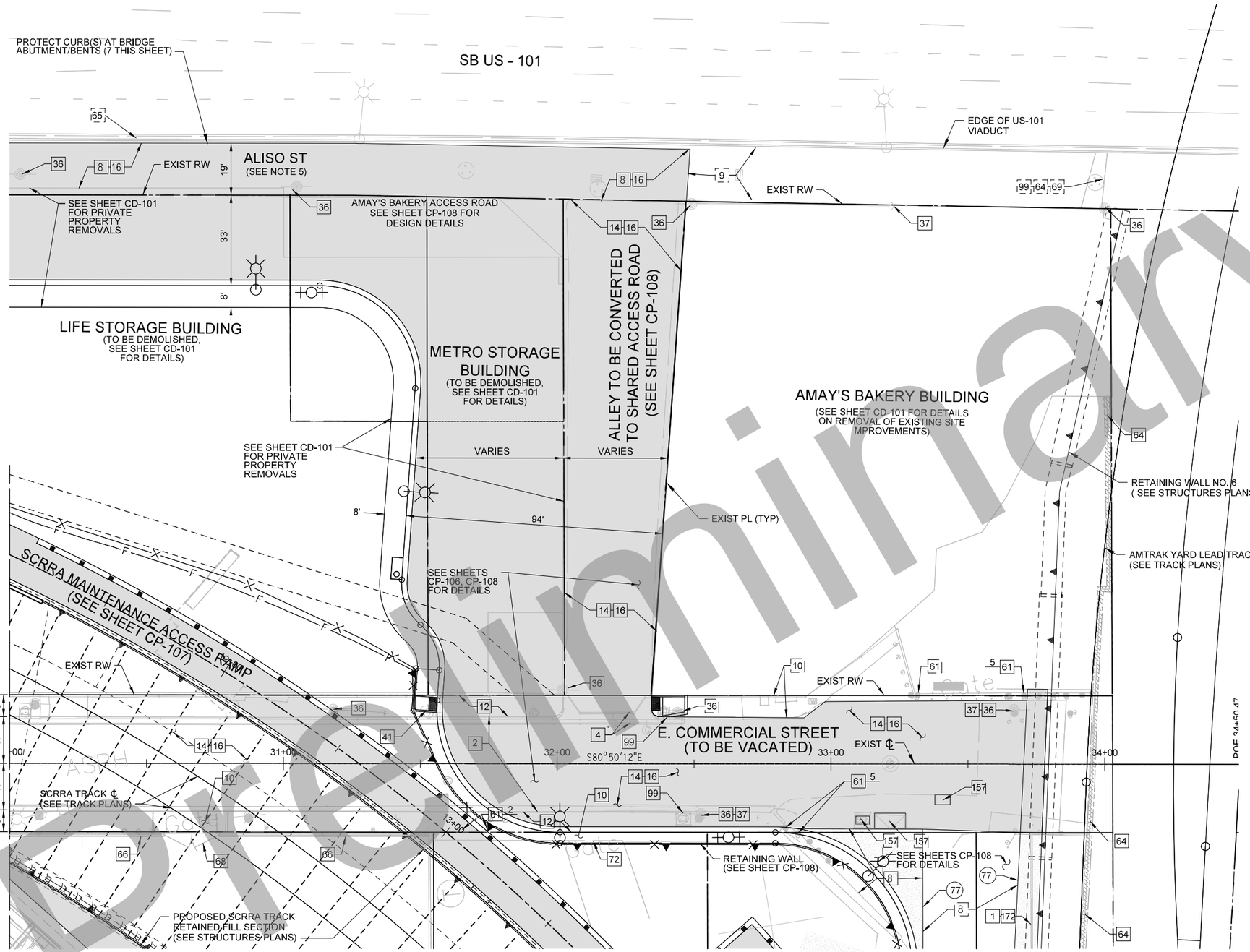

MATCH LINE COMMERCIAL STREET STA 30+00.00
SEE DRAWING NO. CP-103

CONSTRUCTION SYMBOLS:

- CONSTRUCT
- REMODEL EXISTING
- EXISTING
- REMOVE AND CONSTRUCT
- REMOVE
- WORK BY OTHERS

CONSTRUCTION NOTES:

1	CONCRETE CURB	57	STREET LIGHTING POLE
2	TYPE C INTEGRAL CURB & GUTTER	61	CONCRETE BOLLARD
4	CONCRETE GUTTER	64	RETAINING WALL
8	CONCRETE PAVEMENT	65	CHAIN LINK FENCE
9	STREET OR ALLEY PER TYPICAL SECTION	66	CONCRETE MASONRY BLOCK WALL
10	CONCRETE DRIVEWAY	68	CHAIN LINK GATE
12	CONCRETE WALK	69	WROUGHT IRON FENCE (SHEET METAL)
14	ASPHALT CONCRETE PAVEMENT	72	WROUGHT IRON GATE (SHEET METAL)
16	CRUSHED MISCELLANEOUS BASE	77	SAWCUT LINE & JOIN
24	BUILDING DEMOLITION	99	SIDE OPENING CATCH BASIN
36	UTILITY POLE	148	LIGHT POLE
37	POLE ANCHOR	157	WATER VAULT
38	STREET LIGHTING PULL BOX	172	LOW BLOCK WALL
41	FIRE HYDRANT	174	UNKNOWN VAULT

LEGEND:

- NEW PAVEMENT AREA (PAVEMENT TYPE AND SECTION TBD UNLESS OTHERWISE NOTED) (SEE SHEET CP-108)
- NEW PAVEMENT (PCC) AREA (PAVEMENT TYPE AND SECTION TBD UNLESS OTHERWISE NOTED) (SEE SHEET CP-108)

NOTES:

1. SEE UTILITY PLANS FOR EXIST AND PROPOSED UTILITIES.
2. SEE TRACK PLANS FOR TRACK RELATED WORK.
3. SEE STRUCTURES PLANS FOR BRIDGE AND RETAINING WALL WORK UNLESS SPECIFIED HEREIN.
4. ALL STREET SIGNS AND POSTS OR POLES TO BE REMOVED OR PROTECTED IN PLACE, ARE TO BE VERIFIED ON SIGNING STRIPING AND SIGNAL PLANS.
5. EXISTING ALISO STREET TO BECOME PART OF ACCESS ROAD SERVING AMAY'S BAKERY PROPERTY.
6. SEE SHEETS CP-106, CP-107 AND CP-108 FOR ROADWAY DETAILS
7. SEE DRAINAGE PLANS FOR PROPOSED GRADING.
8. RELOCATION AND REMOVAL OF INTERFERING OVERHEAD AND UNDERGROUND ELECTRICAL INFRASTRUCTURE ASSUMED TO BE COMPLETED BY LADWP AHEAD OF ROADWAY CONSTRUCTION SHOWN HEREIN.
9. SEE DEMOLITION PLANS FOR DETAILS ON EXISTING PRIVATE PROPERTY BUILDING AND SITE IMPROVEMENT REMOVALS
10. LIMITS OF REMOVALS INCLUDED IN PROPERTY DEMOLITIONS
11. EXISTING POWER POLES SHOWN AS TO BE REMOVED WILL BE REMOVED BY LADWP AHEAD OF CONSTRUCTION.
12. ALL SURFACE UTILITY APPURTENANCES ALONG ALISO STREET, INCLUDING MANHOLES AND VALVE COVERS, TO BE PROTECTED IN PLACE UNLESS OTHERWISE NOTED.

20' 10' 0' 20' 40'
GRAPHIC SCALE

35% DESIGN PLANS
NOT FOR CONSTRUCTION

Preliminary

Original plan submittal made in Aug. 2019

THE PREPARATION OF THIS DRAWING HAS BEEN FINANCED IN PART THROUGH A GRANT FROM THE U.S. DEPARTMENT OF TRANSPORTATION, FEDERAL TRANSIT ADMINISTRATION (FTA), UNDER THE FEDERAL TRANSIT ACT OF 1964, AS AMENDED, AND IN PART BY THE TAXES OF THE CITIZENS OF LOS ANGELES COUNTY AND OF THE STATE OF CALIFORNIA.

Rev No.	Date	Description
1	3/21	Updated to reflect preservation of Amay's property
2	12/21	
3	6/22	Updated Amay's access road and associated retaining wall shown

DESIGNED BY K. WARFIELD
DRAWN BY J. MAY
CHECKED BY M. COOLEY
IN CHARGE T. KIM
DATE

REGISTERED PROFESSIONAL ENGINEER — No. ____ Exp. ____ CIVIL — STATE OF CALIFORNIA

Metro
LOS ANGELES COUNTY
METROPOLITAN TRANSPORTATION AUTHORITY

HDR ENGINEERING
350 S. GRAND AVENUE
SUITE 2900
LOS ANGELES, CA 90071
(213) 239-5800

SUBMITTED: _____ PROJECT MANAGER
APPROVED: _____

LINK UNION STATION PROJECT
ROADWAY IMPROVEMENTS
PUBLIC ROADWAY PLAN
SHEET 3 OF 4

CONTRACT NO
DRAWING NO CP-104 REV
SCALE 1"=20'
SHEET NO 98

Plot Driver=$PLTDRVS$ Pentable=PlotStamp.tbl USER = KWARFIEL 2:22:12 PM 3/3/2022 $FILE$

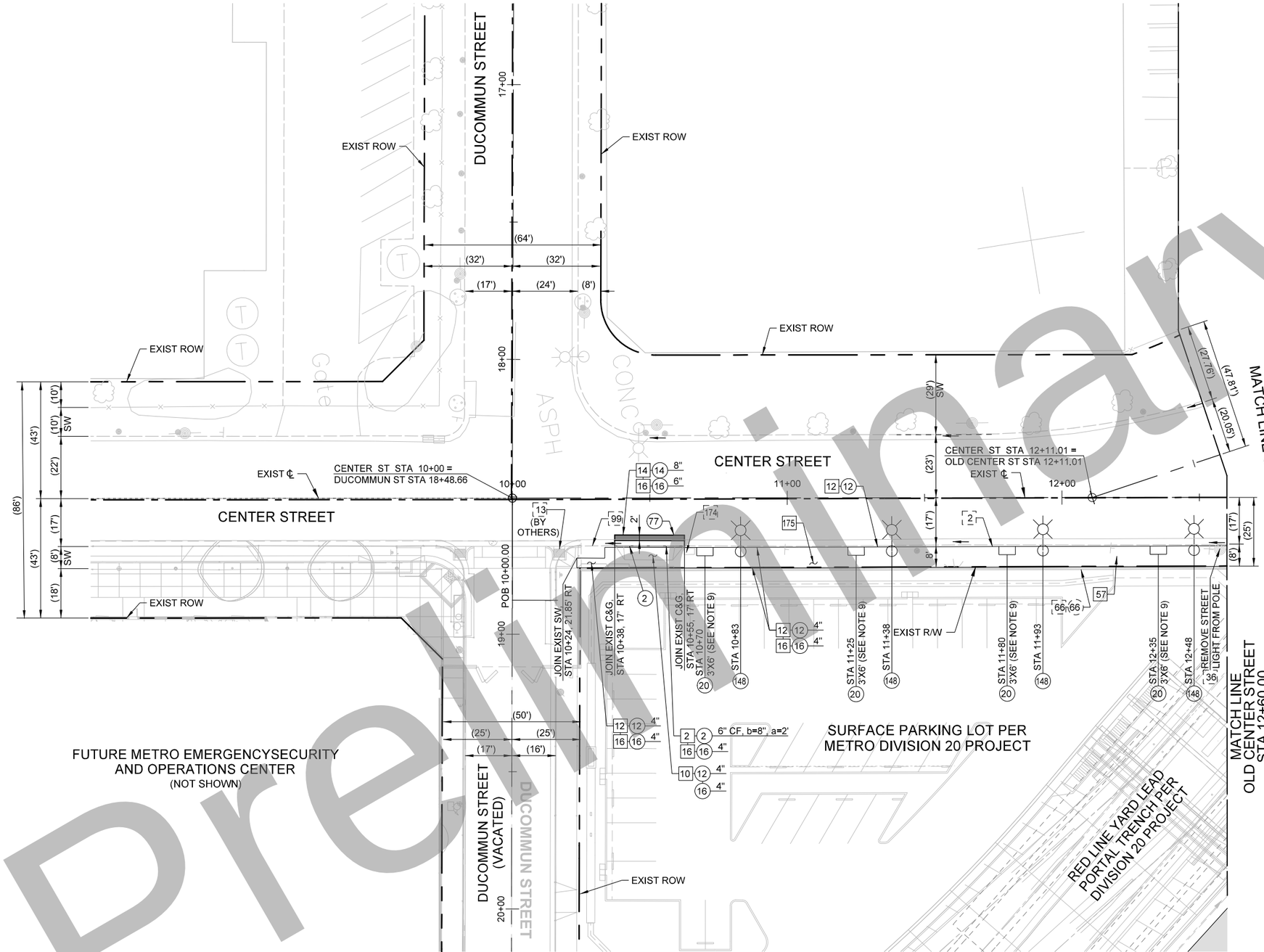

CONSTRUCTION SYMBOLS:

- CONSTRUCT
- REMODEL EXISTING
- EXISTING
- REMOVE AND CONSTRUCT
- REMOVE
- WORK BY OTHERS

CONSTRUCTION NOTES:

2	TYPE C INTEGRAL CURB & GUTTER
10	CONCRETE DRIVEWAY
12	CONCRETE WALK
13	CURB RAMP
14	ASPHALT CONCRETE PAVEMENT
16	CRUSHED MISCELLANEOUS BASE
20	TREE
36	UTILITY POLE
38	STREET LIGHTING PULL BOX
57	STREET LIGHTING POLE
66	CONCRETE MASONRY BLOCK WALL
77	SAWCUT LINE & JOIN
99	SIDE OPENING CATCH BASIN
148	LIGHT POLE
174	UNKNOWN VAULT
175	SHRUBS

NOTES:

1. SEE UTILITY PLANS FOR EXIST AND PROPOSED UTILITIES.
2. SEE TRACK PLANS FOR TRACK RELATED WORK.
3. SEE STRUCTURES PLANS FOR BRIDGE AND RETAINING WALL WORK UNLESS SPECIFIED HEREIN.
4. ALL STREET SIGNS AND POSTS OR POLES TO BE REMOVED OR PROTECTED IN PLACE, ARE TO BE VERIFIED ON SIGNING STRIPPING AND SIGNAL PLANS.
5. OLD CENTER STREET TO BE VACATED AND REMOVED NORTH OF STA. 13+83.16. EXISTING ALISO STREET TO BECOME PART OF ACCESS ROAD SERVING AMAY'S BAKERY PROPERTY.
6. MINIMUM 4" CMB SHALL BE PLACED UNDERNEATH PROPOSED SIDEWALK AND CURB RAMPS. 6" CMB SHALL BE PLACED UNDERNEATH ALL CURBS AND DRIVEWAYS.
7. SEE DRAINAGE PLANS FOR PROPOSED GRADING.
8. RELOCATION AND REMOVAL OF INTERFERING OVERHEAD AND UNDERGROUND ELECTRICAL INFRASTRUCTURE ASSUMED TO BE COMPLETED BY LADWP AHEAD OF ROADWAY CONSTRUCTION SHOWN HEREIN.
9. UNLESS OTHERWISE NOTED ON THESE PLANS, THE CONTRACTOR SHALL PLANT A MINIMUM OF 24-INCH BOX SIZE TREES OF SPECIES, QUANTITY, AND LOCATIONS APPROVED BY THE CITY OF LOS ANGELES PER STANDARD PLAN S-450-3, S-456 AND S-663. THE COVER SHALL BE DECOMPOSED GRANITE WHEN TREE WELL COVER IS NOT SPECIFIED ON THESE PLANS. LANDSCAPE CONSTRUCTION WITHIN THE PUBLIC RIGHT-OF-WAY SHALL CONFORM TO THE CITY'S LATEST PARKWAY LANDSCAPING GUIDELINES.

20' 10' 0' 20' 40'
GRAPHIC SCALE

35% DESIGN PLANS
NOT FOR CONSTRUCTION

Preliminary

Original plan submittal made in Aug. 2019

THE PREPARATION OF THIS DRAWING HAS BEEN FINANCED IN PART THROUGH A GRANT FROM THE U.S. DEPARTMENT OF TRANSPORTATION, FEDERAL TRANSIT ADMINISTRATION (FTA), UNDER THE FEDERAL TRANSIT ACT OF 1964, AS AMENDED, AND IN PART BY THE TAXES OF THE CITIZENS OF LOS ANGELES COUNTY AND OF THE STATE OF CALIFORNIA.

Rev No.	Date	Description
1	3/21	
2	12/21	
3	6/22	

DESIGNED BY K. WARFIELD
DRAWN BY J. MAY
CHECKED BY M. COOLEY
IN CHARGE T. KIM
DATE

REGISTERED PROFESSIONAL ENGINEER
No. _____
Exp. _____
CIVIL
STATE OF CALIFORNIA

Metro
LOS ANGELES COUNTY
METROPOLITAN TRANSPORTATION AUTHORITY

HDR
HDR ENGINEERING
350 S. GRAND AVENUE
SUITE 2900
LOS ANGELES, CA 90071
(213) 239-5800

SUBMITTED: _____ PROJECT MANAGER
APPROVED: _____

LINK UNION STATION PROJECT
ROADWAY IMPROVEMENTS
PUBLIC ROADWAY PLAN
SHEET 4 OF 4

CONTRACT NO
DRAWING NO CP-105 REV
SCALE 1"=20'
SHEET NO 99

Plot Driver=$PLTDRVS$ Pentable=PlotStamp.tbl USER = KWARFIEL 2:24:31 PM 3/3/2022 $FILE$

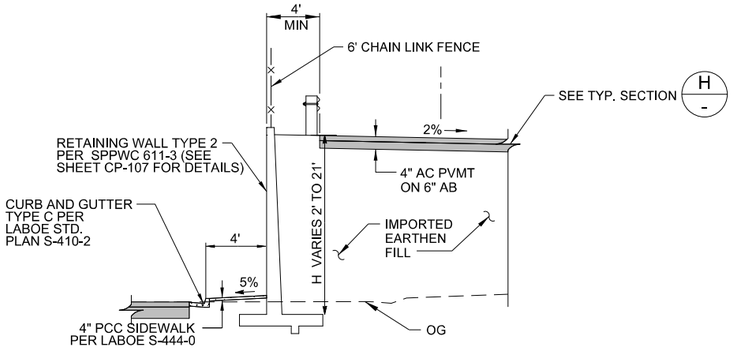

E - SECTION E-E - ACCESS ROAD RETAINING WALL

SCRRA MAINTENANCE RAMP

STA 12+56.85, 39.36' LT TO STA 14+46.36, 81.96' LT

N.T.S.

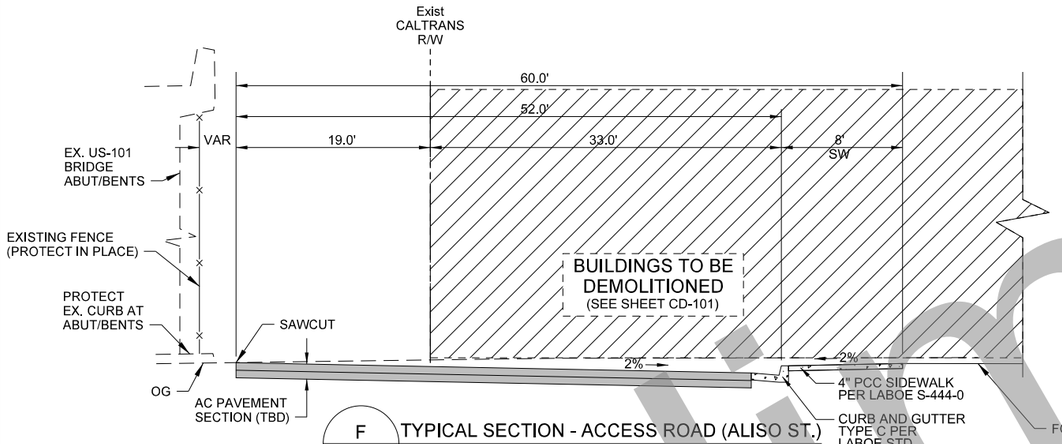

F - TYPICAL SECTION - ACCESS ROAD (ALISO ST.)

N.T.S.

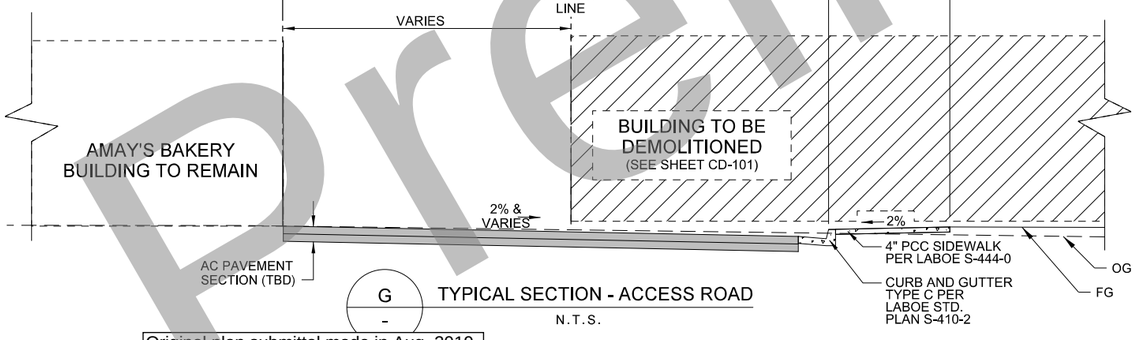

G - TYPICAL SECTION - ACCESS ROAD

N.T.S.

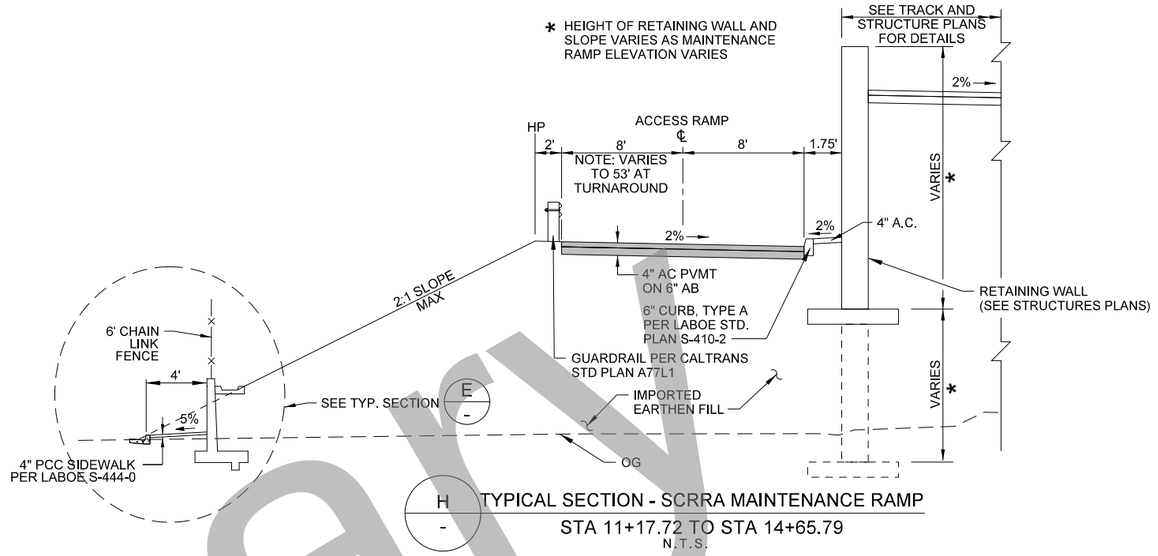

H - TYPICAL SECTION - SCRRA MAINTENANCE RAMP

STA 11+17.72 TO STA 14+65.79

N.T.S.

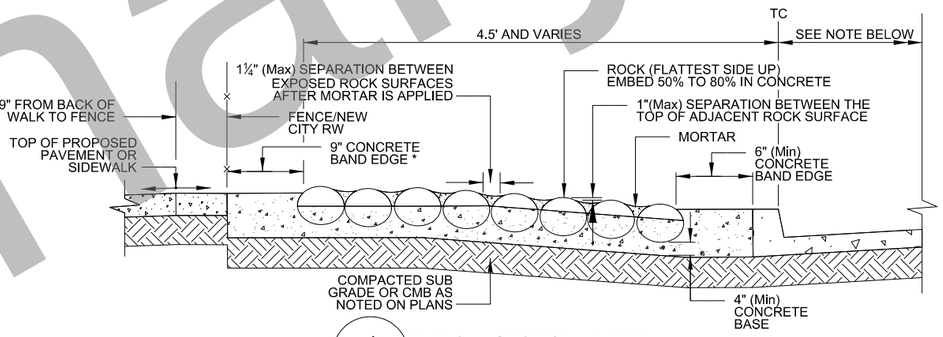

J - TYPICAL SECTION / DETAIL

ROCK BLANKET

N.T.S.

NOTE

ROCK BLANKET DETAIL TO BE APPLIED TO ALL AREAS SHOWN ON LAYOUT UNDER CENTER STREET BRIDGE

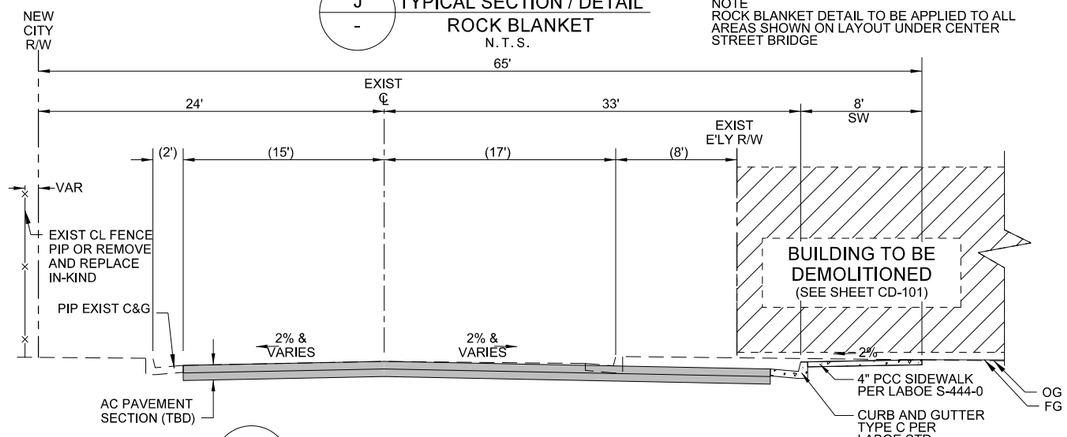

K - TYPICAL SECTION - ACCESS ROAD (OLD CENTER ST.)

STREET TO BE VACATED

N.T.S.

Original plan submittal made in Aug. 2019

Rev No.	Date	Description
1	3/21	Added rock blanket detail and access road section
2	12/21	
3	6/22	Updated to show modified Commercial/Center intersection design, Amay's access road, and associated retaining wall

DESIGNED BY K. WARFIELD
DRAWN BY K. WARFIELD
CHECKED BY M. COOLEY
IN CHARGE T. KIM
DATE [redacted]

REGISTERED PROFESSIONAL ENGINEER — No. — EXP. — CIVIL — STATE OF CALIFORNIA

HDR 350 S. GRAND AVE, SUITE 2900 LOS ANGELES, CA 90071 213.239.5800

SUBMITTED: _____ PROJECT MANAGER

Metro

APPROVED: _____

LINK UNION STATION PROJECT

ROADWAY IMPROVEMENTS

ACCESS ROAD AND MAINTENANCE ACCESS RAMP CROSS SECTIONS AND ROCK BLANKET DETAIL

CONTRACT NO.
DRAWING NO. 100
REVISION
SHEET NO. CP-106
SCALE NTS

Preliminary

5/12/2022 10:09:50 AM
C:\Users\KWarfield\Documents\Temp_Link\US_Plot\Stamp.tbl
c:\projects\sgc\d0603226\working\sgc\d0603226_CP-106_UPDATE.dgn

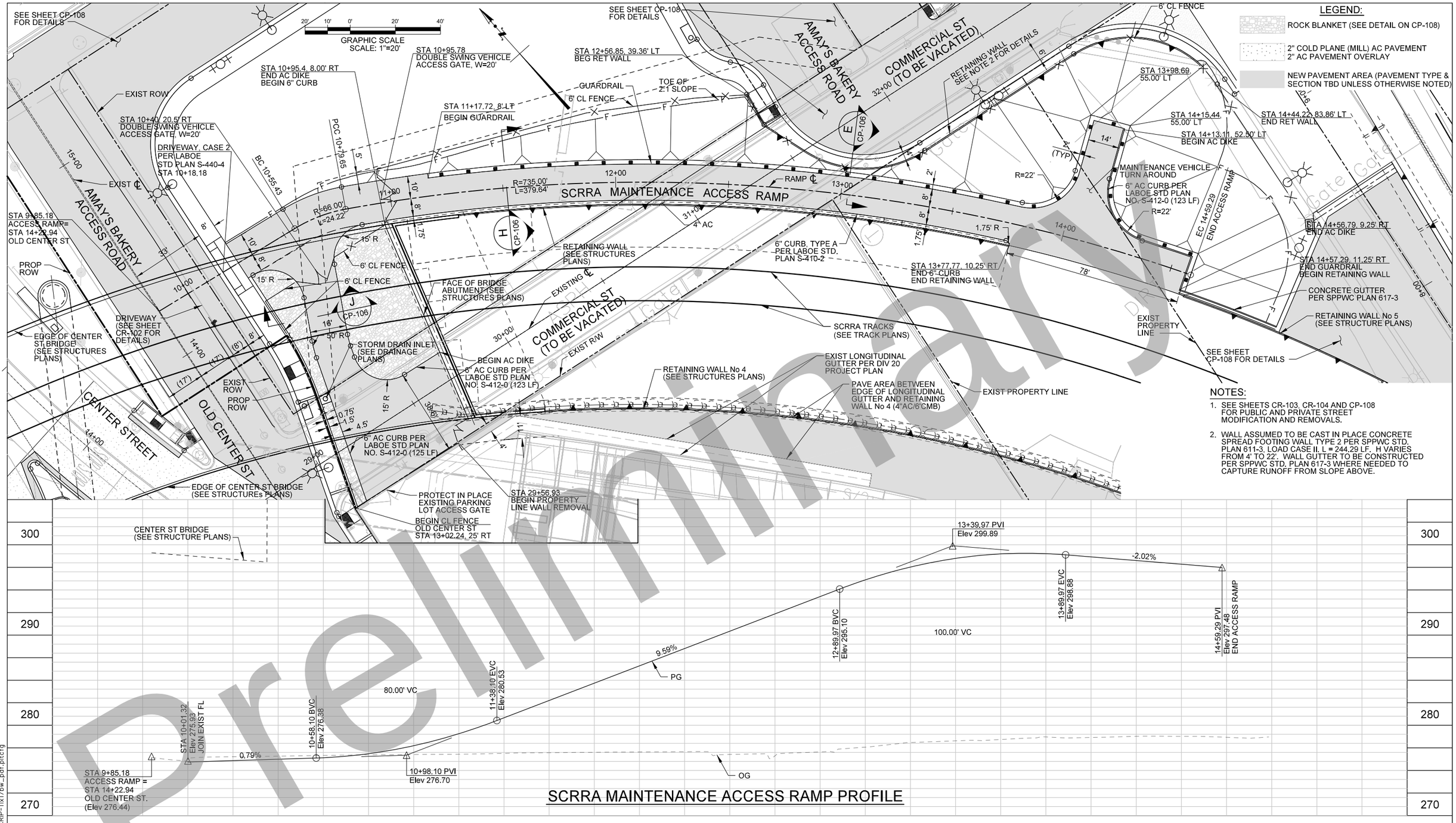

LEGEND:

- ROCK BLANKET (SEE DETAIL ON CP-108)
- 2" COLD PLANE (MILL) AC PAVEMENT 2" AC PAVEMENT OVERLAY
- NEW PAVEMENT AREA (PAVEMENT TYPE & SECTION TBD UNLESS OTHERWISE NOTED)

NOTES:

1. SEE SHEETS CR-103, CR-104 AND CP-108 FOR PUBLIC AND PRIVATE STREET MODIFICATION AND REMOVALS.
2. WALL ASSUMED TO BE CAST IN PLACE CONCRETE SPREAD FOOTING WALL TYPE 2 PER SPPWC STD. PLAN 611-3, LOAD CASE II. L = 244.29 LF. H VARIES FROM 4' TO 22'. WALL GUTTER TO BE CONSTRUCTED PER SPPWC STD. PLAN 617-3 WHERE NEEDED TO CAPTURE RUNOFF FROM SLOPE ABOVE.

Preliminary

Original plan submittal made in Aug. 2019

Rev No.	Date	Description
1	3/21	Updated to reflect preservation of Amay's property
2	12/21	
3	6/22	Updated to show modified Commercial/Center intersection design, Amay's access road, and associated retaining wall

DESIGNED BY K. WARFIELD
DRAWN BY K. WARFIELD
CHECKED BY M. COOLEY
IN CHARGE T. KIM
DATE [redacted]

REGISTERED PROFESSIONAL ENGINEER No. Exp. CIVIL STATE OF CALIFORNIA

HDR 350 S. GRAND AVE, SUITE 2900 LOS ANGELES, CA 90071 213.239.5800

SUBMITTED: _____ PROJECT MANAGER

APPROVED: _____

Metro

LINK UNION STATION PROJECT

ROADWAY IMPROVEMENTS
SCRRA MAINTENACE ACCESS RAMP

CONTRACT NO.
DRAWING NO. 101
REVISION | SHEET NO. CP-107
SCALE H: 1"=20' V: 1"= 5'

5/12/2022 10:18:20 AM
C:\Users\kwarfiel\Documents\Temp_Link\US_Plot\CP-107_update.dgn
C:\Users\kwarfiel\Documents\Temp_Link\US_Plot\Stamp.tbl
c:\pwworking\scc\d0603326\SCRIP-11x17bw_pdf.pltcfg

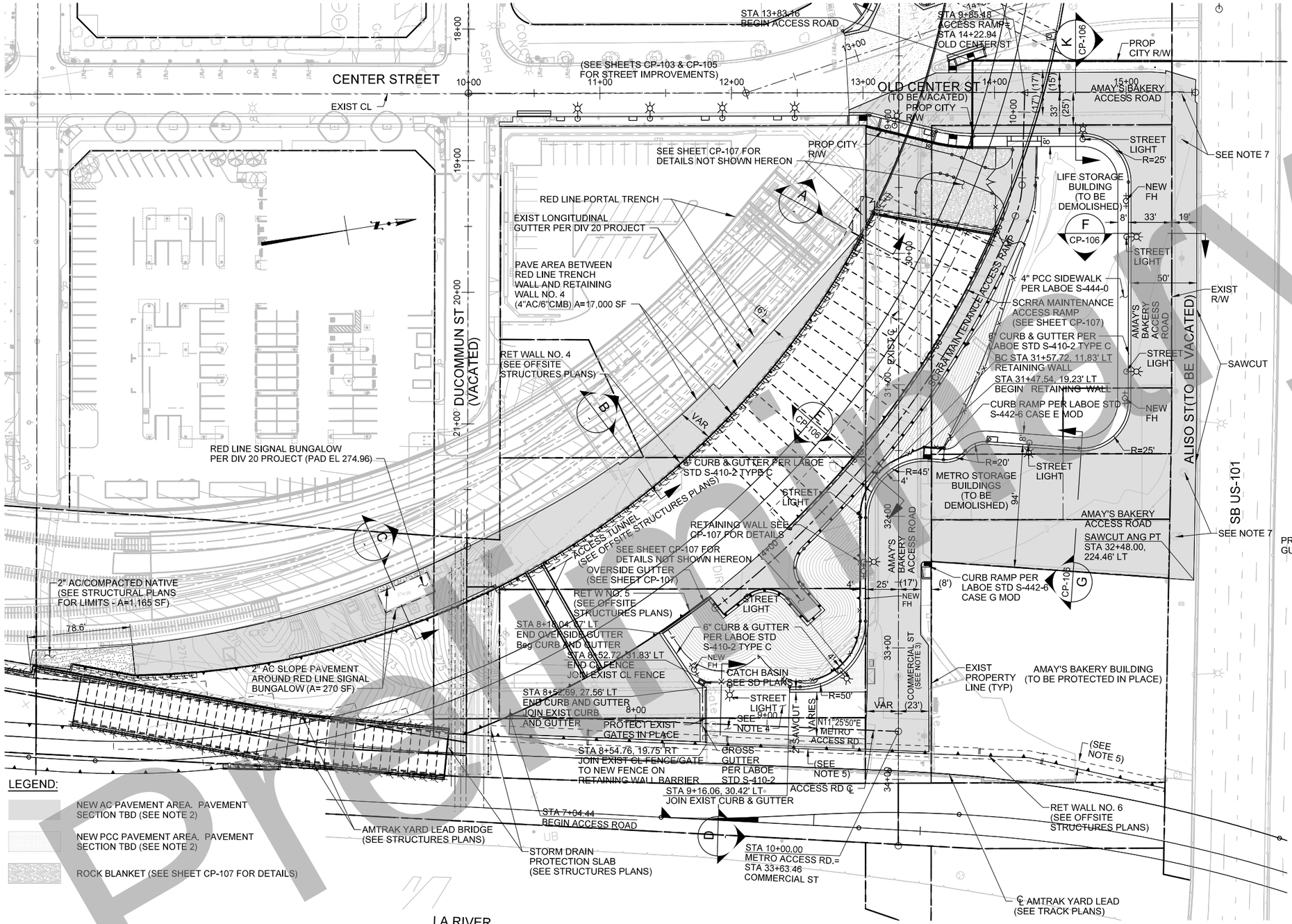

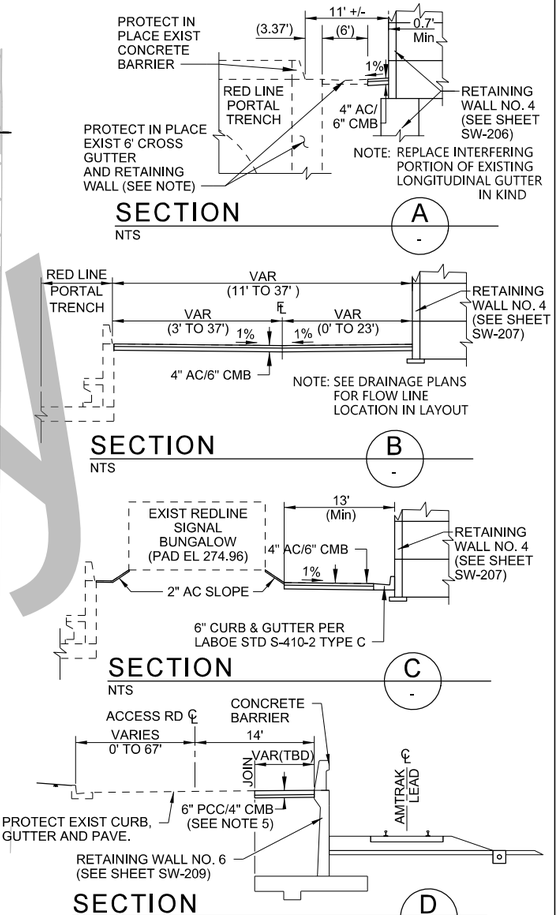

NOTES:

1. ALL GRADED OR OTHERWISE DISTURBED SOIL AREAS ARE TO BE DRY OR HYDROSEEDED WITH A NATIVE SLOPE STABILIZATION SEED MIX AND WILL REQUIRE ESTABLISHMENT IRRIGATION (BY REGULAR TRUCK WATERING OR TEMPORARY SYSTEM INSTALLATION). DETAILS ON PLANTING AND IRRIGATION WORK TO BE DEVELOPED AS PART OF FINAL DESIGN.
2. PAVEMENT SECTION TO BE DETERMINED DURING FINAL DESIGN.
3. COMMERCIAL STREET EAST OF CENTER STREET TO BE VACATED. ALL EXISTING STREET INFRASTRUCTURE EAST OF TOE OF FILL SLOPE TO BE PROTECTED IN PLACE AND REPURPOSED FOR AMAY'S AND METRO PROPERTY ACCESS.
4. PROTECT EXISTING PAVEMENT IN PLACE.
5. WIDTH OF PAVEMENT REMOVAL AND REPLACEMENT TBD (RETAINING WALL NO. 6 PLANS.)
6. SEE SHEETS CP-103, CP-104 AND CD-101 FOR ACCESS PAVEMENT REMOVALS
7. ALL EXISTING SURFACE UTILITY APPURTENANCES, INCLUDING MANHOLE AND VALVE COVERS, ALONG ALISO STREET TO BE ADJUSTED TO GRADE.
8. STREET LIGHT EXACT LOCATIONS AND TYPES TBD. LOCATIONS SHOWN ARE APPROXIMATE AND WILL BE FORMALLY DETERMNED AS PART OF FINAL DESIGN.

Preliminary

Original plan submittal made in Aug. 2019

Rev No.	Date	Description
1	3/21	Plan added to set
2	12/21	
3	6/22	Updated to reflect modified Commercial/Center intersection design, Amay's access road, and associated retaining wall

DESIGNED BY K. WARFIELD
DRAWN BY K. WARFIELD
CHECKED BY M. COOLEY
IN CHARGE T. KIM
DATE [redacted]

REGISTERED PROFESSIONAL ENGINEER No. Exp. CIVIL STATE OF CALIFORNIA

HDR 350 S. GRAND AVE. SUITE 2900 LOS ANGELES, CA 90071 213.239.5800

SUBMITTED: _____ PROJECT MANAGER

Metro

APPROVED: _____

LINK UNION STATION PROJECT

ROADWAY IMPROVEMENTS AMAY'S BAKERY / METRO RED LINE SIGNAL BUNGALOW ACCESS ROAD

CONTRACT NO.
DRAWING NO. 102
REVISION
SHEET NO. CP-108
SCALE 1" = 40'

5/12/2022 10:21:36 AM
C:\Users\kwarfiel\D0219289\USG-CP-108_update.dgn
C:\Users\kwarfiel\D0219289\USG\Temp_Link\USG_PlotStamp.tbl
c:\pwworking\soc\d0603326\SCRIP-11x17bw_pdf.pltcfg

CONSTRUCTION NOTES:

1. THE CONTRACTOR SHALL BE RESPONSIBLE FOR LABOR AND MATERIAL INVOLVED IN THE REMOVAL, MARKOUT, AND INSTALLATION OF ALL STRIPING, PAVEMENT MARKINGS, CURB MARKINGS AND SIGNS SHOWN HEREON. REMOVAL OF MARKINGS SHALL BE PERFORMED BEFORE MARKOUT AND INSTALLATION OF NEW STRIPING AND SHALL BE BY WET SANDBLASTING/GRINDING IN ACCORDANCE WITH LOS ANGELES DEPARTMENT OF TRANSPORTATION (LADOT) SPECIFICATION NO. 76-016-10. MARKOUT SHALL BE BY SPRAY PAINT OR HEAVY PAINT BRUSH MARKINGS OVER A PULLED ROPE IN THE RESPECTIVE WHITE OR YELLOW COLORS OF THE PROPOSED STRIPING. FINAL STRIPING AND PAVEMENT MARKINGS SHALL BE IN HOT APPLIED ALKYD THERMOPLASTIC IN ACCORDANCE WITH LADOT SPECIFICATIONS NOS. 51-005-10 AND 76-012-16.

2. DURING ALL PHASES OF CONSTRUCTION, TEMPORARY RAISED OVERLAY PAVEMENT MARKERS SHALL BE MAINTAINED ADJACENT TO ANY TEMPORARY CENTERLINE, MARKOUT CENTERLINE, TAPED CENTERLINE, OR TO THE SCAR OF A SANDBLASTED CENTERLINE, AS APPLICABLE, AS PER LADOT STANDARD PLAN NO. S-453.0.

3. THE INSTALLATION OF THERMOPLASTIC STRIPING MAY PROCEED ONLY AFTER INSPECTION AND APPROVAL OF MARKOUT BY THE LADOT TEMPORARY TRAFFIC MANAGEMENT SECTION. THE CONTRACTOR SHALL CORRECT ALL ERRORS IN MARKOUT REQUESTED BY LADOT. UPON APPROVAL OF MARKOUT THE CONTRACTOR SHALL FULLY INSTALL THE THERMOPLASTIC STRIPING, PAVEMENT MARKINGS, CURB MARKINGS, AND SIGNS (AS APPLICABLE) WITHIN THE FOLLOWING THREE (3) WORKING DAYS. THE CONTRACTOR SHALL CONTACT THE LADOT TEMPORARY TRAFFIC MANAGEMENT SECTION AT (213) 972-5968 AT THE FOLLOWING POINTS IN TIME AND FOR THE FOLLOWING PURPOSES:

   A. TEN (10) WORKING DAYS IN ADVANCE OF MARKOUT.
   B. UPON COMPLETION OF MARKOUT (INCLUDING ANY MARKOUT CORRECTIONS) FOR INSPECTION AND APPROVAL.
   C. UPON COMPLETION OF THERMOPLASTIC STRIPING (INCLUDING ANY THERMOPLASTIC STRIPING CORRECTIONS) FOR INSPECTION AND FINAL STRIPING APPROVAL.

4. THE FIELD CONDITIONS SHOWN AS EXISTING ON THIS PLAN MAY CHANGE BETWEEN THE PLAN APPROVAL DATE AND THE IMPLEMENTATION DATE. THE CONTRACTOR MAY BE REQUIRED TO INSTALL OR REMOVE STRIPING, PAVEMENT MARKINGS, SIGNS, OR OTHER TRAFFIC CONTROL DEVICES BEYOND THOSE INDICATED ON THIS PLAN, IN ORDER TO FACILITATE THESE CHANGES IN FIELD CONDITIONS AND/OR TO BE IN COMPLIANCE WITH LADOT STANDARDS AND SPECIFICATIONS.

5. CONTRACTOR SHALL CONTACT THE LADOT PARKING METER DIVISION, (213) 473-8270, TEN (10) WORKING DAYS PRIOR TO THE START OF, AND, AT THE END OF CONSTRUCTION, TO ARRANGE AND COORDINATE FOR ANY PARKING METER/PAY STATION RELATED WORK. THESE ARE WORK WHICH INCLUDES, BUT ARE NOT LIMITED TO, TEMPORARY OR PERMANENT INSTALLATION, REMOVAL, AND RELOCATION OF PARKING METERS, PAY STATIONS, SIGNS, METER/SIGN POSTS, CURB PARKING SPACE NUMBERS, CURB PAINTINGS, ETC. THE INSTALLATION, RELOCATION, AND REMOVAL COSTS WILL BE DEDUCTED FROM THE CONTRACTOR'S DEPOSIT TO THE PROJECT FUND ACCOUNT; OR IF NONE, THROUGH INVOICE PAYMENT TO THE LADOT PARKING METER DIVISION. FAILURE TO NOTIFY LADOT WILL MAKE THE CONTRACTOR LIABLE FOR ALL MISSING OR DAMAGED PARKING METERS, PAY STATIONS, SIGNS, ETC., THAT THE LADOT RECORDS INDICATE WERE PRESENT. CONTRACTOR MAY REMOVE AND DISPOSE OF THE PARKING METER POSTS IN CONJUNCTION WITH THEIR SIDEWALK DEMOLITION WORK, BUT ONLY AFTER LADOT HAD REMOVED THE PARKING METER HEADS AND ANY METER-POST-MOUNTED SIGNS, WHERE APPLICABLE.

6. FEASIBILITY OF CLASS IV BIKE LANES ON COMMERCIAL ST. INCLUDE THE FOLLOWING IMPACTS:

   A. ELIMINATION OF PARKING METER ZONE INCLUDING EIGHT (8) STALLS ON THE SOUTHSIDE OF COMMERCIAL ST. BETWEEN VIGNES ST. AND CENTER ST.
   B. ELIMINATION OF WESTBOUND LEFT TURN POCKET ON COMMERCIAL ST. AT VIGNES ST.
   C. ELIMINATION OF ONE (1) WESTBOUND THRU LANE BETWEEN VIGNES ST. AND ALAMEDA ST.

LEGEND

1. = EXISTING STRIPING & MARKINGS TO REMAIN
   = EXISTING STRIPING & MARKINGS TO BE REMOVED
   = PROPOSED STRIPING & MARKINGS
2. = EXISTING SIGN AND POST
   = EXISTING SIGN AND POST TO BE REMOVED
   = PROPOSED SIGN AND POST
3. = 2'W PROPOSED CONTINENTAL CROSSWALK
4. R/C = EXISTING RED CURB MARKINGS TO REMAIN
   R/C = EXISTING RED CURB MARKINGS TO BE REMOVED
   R/C = PROPOSED RED CURB MARKINGS
5. = EXISTING BIKE LANE PAVEMENT MARKINGS TO REMAIN
   = EXISTING BIKE LANE PAVEMENT MARKINGS TO BE REMOVED
   = PROPOSED BIKE LANE PAVEMENT MARKINGS
6. = EXISTING DRIVEWAY
   = EXISTING DRIVEWAY TO BE REMOVED
   = PROPOSED DRIVEWAY
7. = EXISTING CURB RAMP
   = EXISTING CURB RAMP TO BE REMOVED
   = PROPOSED CURB RAMP
8. = EXISTING GREEN BIKE CONFLICT STRIPING TO REMAIN
   = EXISTING GREEN BIKE CONFLICT STRIPING TO BE REMOVED
   = PROPOSED GREEN BIKE CONFLICT STRIPING
9. = PROPOSED SHARROW PAVEMENT MARKINGS
10. = PROPOSED K72 POST (36") LIGHT GREY WITH REFLECTIVE COLLARS

ABBREVIATIONS:

T.A.N.S.A.T.	TOW-AWAY NO STOPPING ANY TIME
N.P.A.T	NO PARKING ANY TIME
X-SUN	EXCEPT SUNDAY
X-S/S	EXCEPT SATURDAY AND SUNDAY
LT	LEFT
RT	RIGHT
R/C	RED CURB
Y/C	YELLOW CURB
DY	DOUBLE YELLOW
Y	YELLOW
W	WHITE
HR	HOUR
MIN	MINUTE
A	AM
P	PM
R	RADIUS
CR	CURB RADIUS
PMZ	PARKING METER ZONE
RCR	REVERSE CURB RADIUS
PKG	PARKING
ST	STREET

INDEX OF SHEETS

T-001 - ABBREVIATIONS, LEGEND, INDEX OF SHEETS & NOTES
T-002 - LAYOUT SHEET KEY MAP
T-101 - SIGNING & STRIPING RESTORATION PLAN
T-102 - SIGNING & STRIPING RESTORATION PLAN
T-103 - SIGNING & STRIPING RESTORATION PLAN (PRIVATE)

Preliminary

35% DESIGN PLANS
NOT FOR CONSTRUCTION

Original plan submittal made in Aug. 2019

THE PREPARATION OF THIS DRAWING HAS BEEN FINANCED IN PART THROUGH A GRANT FROM THE U.S. DEPARTMENT OF TRANSPORTATION, FEDERAL TRANSIT ADMINISTRATION (FTA), UNDER THE FEDERAL TRANSIT ACT OF 1964, AS AMENDED, AND IN PART BY THE TAXES OF THE CITIZENS OF LOS ANGELES COUNTY AND OF THE STATE OF CALIFORNIA.

Rev No.	Date	Description
1	3/21	
2	12/21	
3	6/22	

DESIGNED BY L. LOERA
DRAWN BY R. KINGI
CHECKED BY A. GAYTAN
IN CHARGE T. KIM
DATE 8/01/2019

REGISTERED PROFESSIONAL ENGINEER — No. ____ Exp. ____ CIVIL — STATE OF CALIFORNIA

Metro
LOS ANGELES COUNTY
METROPOLITAN TRANSPORTATION AUTHORITY

V&A INC.
1111 S. GRAND AVE. SUITE 103
LOS ANGELES, CA 90015
213.972.9700

HDR ENGINEERING
350 S. GRAND AVENUE
SUITE 2000
LOS ANGELES, CA 90071
(213) 239-5800

SUBMITTED: _____ PROJECT MANAGER
APPROVED: _____

LINK UNION STATION PROJECT

SIGNING & STRIPING RESTORATION
ABBREVIATIONS, LEGEND,
INDEX OF SHEETS & NOTES

CONTRACT NO
DRAWING NO T-001 REV
SCALE NONE
SHEET NO 103

3/3/2022 4:26:31 PM USER = RSHIMIZU
V:\2014\VA-1408 SCRIP - HDR\DESIGN\CAD\TRAFFIC\SHEET\T-001.DWG

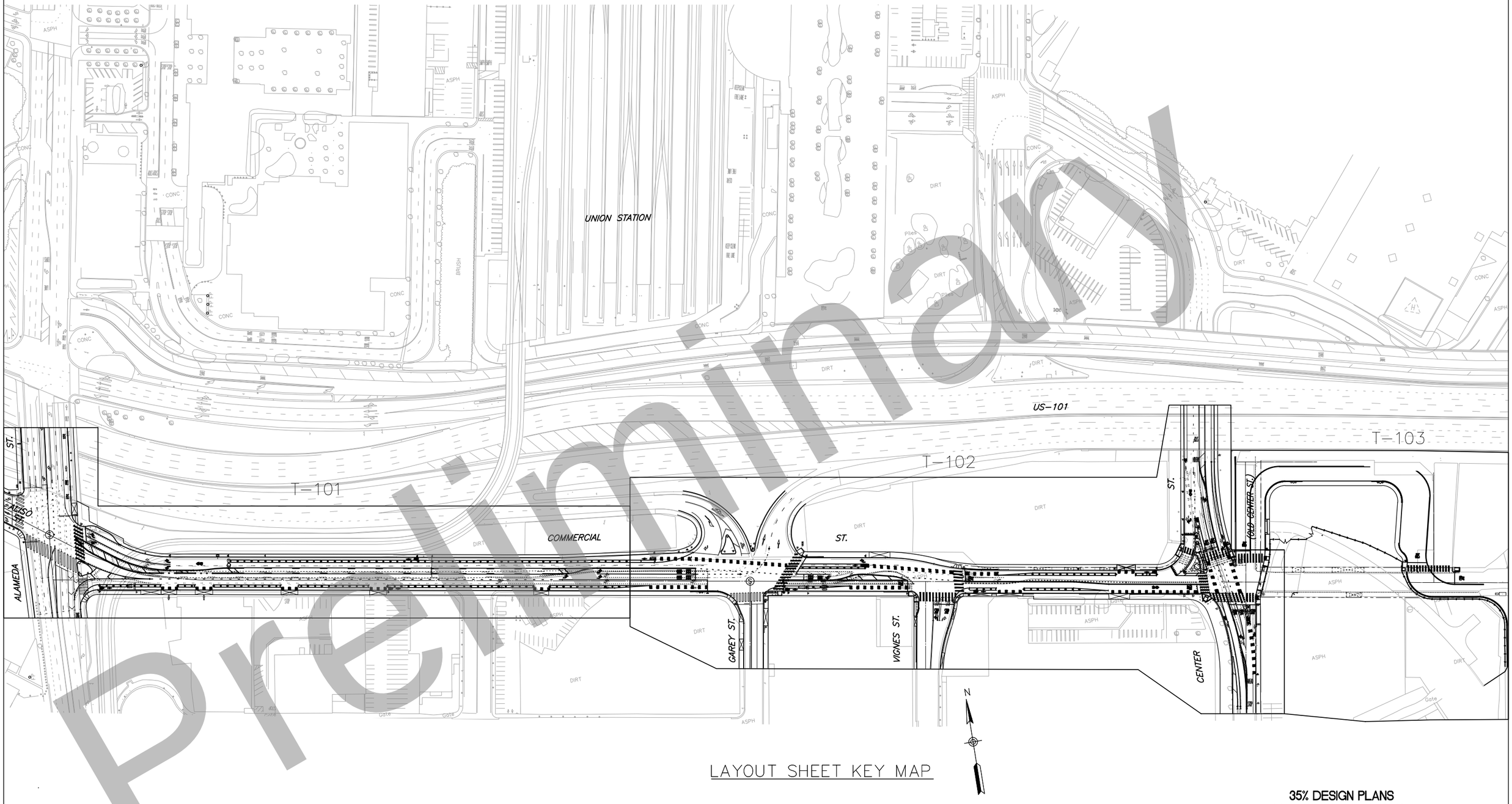

LAYOUT SHEET KEY MAP

Preliminary

35% DESIGN PLANS
NOT FOR CONSTRUCTION

Original plan submittal made in Aug. 2019

THE PREPARATION OF THIS DRAWING HAS BEEN FINANCED IN PART THROUGH A GRANT FROM THE U.S. DEPARTMENT OF – TRANSPORTATION, FEDERAL TRANSIT ADMINISTRATION (FTA), UNDER THE FEDERAL TRANSIT ACT OF 1964, AS AMENDED, AND IN PART BY THE TAXES OF THE CITIZENS OF LOS ANGELES COUNTY AND OF THE STATE OF CALIFORNIA.

Rev No.	Date	Description
1	3/21	
2	12/21	
3	6/22	Updated bulbout design shown on Vignes

DESIGNED BY L. LOERA
DRAWN BY R. KINGI
CHECKED BY A. GAYTAN
IN CHARGE T. KIM
DATE 6/01/2022

REGISTERED PROFESSIONAL ENGINEER — No. — EXP. — CIVIL — STATE OF CALIFORNIA

Metro
LOS ANGELES COUNTY
METROPOLITAN TRANSPORTATION AUTHORITY

V&A INC.
1111 S. GRAND AVE. SUITE 103
LOS ANGELES, CA 90015
213.972.9700

HDR ENGINEERING
350 S. GRAND AVENUE
SUITE 2500
LOS ANGELES, CA 90071
(213) 236-0800

SUBMITTED: _____ PROJECT MANAGER

APPROVED: _____

LINK UNION STATION PROJECT

SIGNING & STRIPING RESTORATION
LAYOUT SHEET KEY MAP

CONTRACT NO

DRAWING NO T-002 | REV

SCALE 1"=80'

SHEET NO 104

4/29/2022 10:58:26 AM USER = RSHIMIZU
V:\2014\VA-1408 SCRIP - HDR\DESIGN\CAD\TRAFFIC\SHEET\T-002.DWG

APPROVED AS TO IMPACT ON STATE FACILITIES AND CONFORMANCE WITH APPLICABLE STATE STANDARDS AND PRACTICES AND THAT TECHNICAL OVERSIGHT WAS PERFORMED.

CONSULTANT DESIGN MANAGER | CALTRANS DESIGN OVERSIGHT APPROVAL | REGISTRATION No. | LICENSE Exp DATE | DATE SIGNED

INDEX OF PLANS

SHEET No.	DESCRIPTION
1	TITLE
2-5	TYPICAL CROSS SECTIONS
6-7	LAYOUTS
8-9	PROFILES & SUPERELEVATION DIAGRAMS
10-11	UTILITY PLANS
12-19	STAGE CONSTRUCTION & TRAFFIC HANDLING PLANS
STRUCTURE PLANS	
20-33	LAUS VIADUCT OVER US-101
34	RETAINING WALL No. 21 PLAN

STATE OF CALIFORNIA
DEPARTMENT OF TRANSPORTATION

PROJECT PLANS FOR CONSTRUCTION ON
STATE HIGHWAY

IN LOS ANGELES COUNTY
IN CITY OF LOS ANGELES
ON US-101 FROM 0.26 MILES WEST OF THE LOS ANGELES RIVER
TO 0.11 MILE EAST OF N. ALAMEDA STREET OVERCROSSING
AND ON I-10S FROM 0.3 MILE WEST OF LOS ANGELES RIVER BOH
TO 0.12 MILE EAST OF N. ALAMEDA STREET

TO BE SUPPLEMENTED BY STANDARD PLANS DATED 2018

Dist	COUNTY	ROUTE	POST MILES TOTAL PROJECT	SHEET No.	TOTAL SHEETS
07	LA	10S,101	17.2/17.5 0.4/0.7	1	34



LOCATION MAP

CITY OF LOS ANGELES

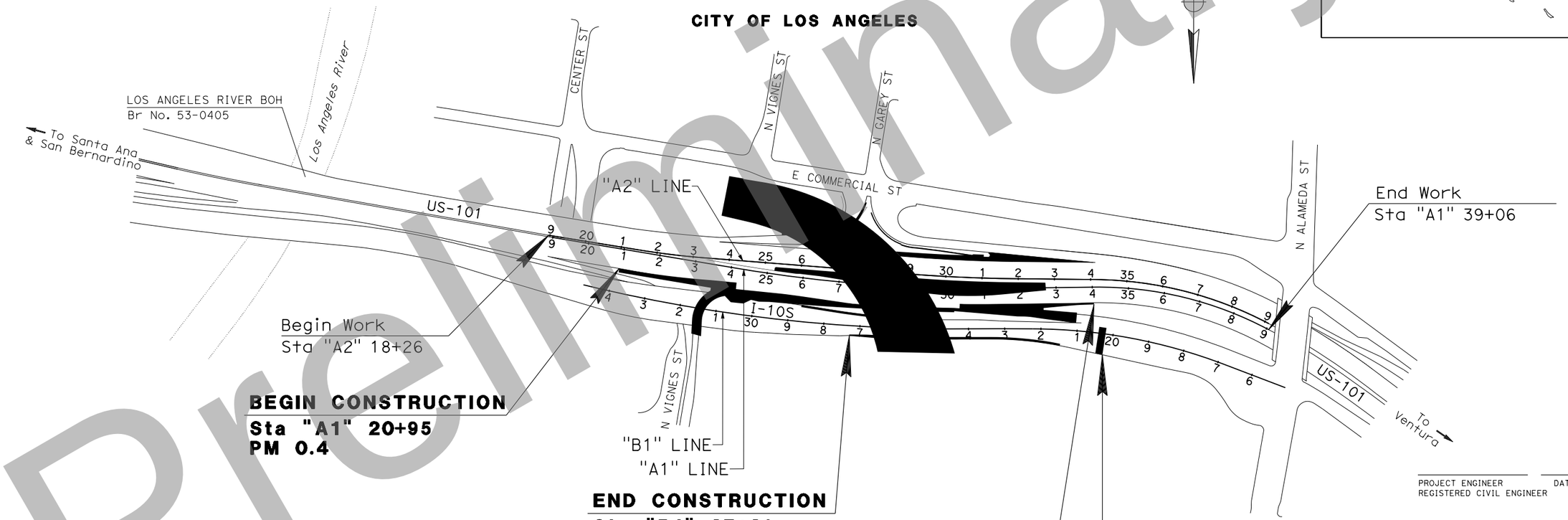

NO SCALE

35% PLANS - NOT FOR CONSTRUCTION

PROJECT ENGINEER DATE
REGISTERED CIVIL ENGINEER

REGISTERED PROFESSIONAL ENGINEER — No. — Exp. — CIVIL — STATE OF CALIFORNIA

PLANS APPROVAL DATE

THE STATE OF CALIFORNIA OR ITS OFFICERS OR AGENTS SHALL NOT BE RESPONSIBLE FOR THE ACCURACY OR COMPLETENESS OF SCANNED COPIES OF THIS PLAN SHEET.

Original plan submittal made in Aug. 2019

Rev No.	Date	Description
1	3/21	
2	12/21	
3	6/22	

THE CONTRACTOR SHALL POSSESS THE CLASS (OR CLASSES) OF LICENSE AS SPECIFIED IN THE "NOTICE TO BIDDERS."

35% DESIGN DRAFT
NOT FOR CONSTRUCTION

WKE, INC.
1851 E. FIRST STREET, SUITE 1400
SANTA ANA, CA 92705

LA METRO
ONE GATEWAY PLAZA
LOS ANGELES, CA 90012

CONTRACT No.	07-222000
PROJECT ID	0715000115

LAST REVISION 8/01/2019
DATE PLOTTED => 18-MAR-2020
TIME PLOTTED => 13:58

SHEET NO 105

Preliminary

BORDER LAST REVISED 8/1/2016 | CALTRANS WEB SITE IS: HTTP//WWW.DOT.CA.GOV/ | RELATIVE BORDER SCALE IS IN INCHES 0 1 2 3 | USERNAME => CMcguire | DGN FILE => 0715000119ab001.dgn | UNIT XXXX | PROJECT NUMBER & PHASE 07150001190

Dist	COUNTY	ROUTE	POST MILES TOTAL PROJECT	SHEET No.	TOTAL SHEETS
07	LA	10S, 101	17.2/17.5, 0.4/0.7	2	34

REGISTERED CIVIL ENGINEER DATE

PLANS APPROVAL DATE

REGISTERED PROFESSIONAL ENGINEER — No. Exp. CIVIL — STATE OF CALIFORNIA

THE STATE OF CALIFORNIA OR ITS OFFICERS OR AGENTS SHALL NOT BE RESPONSIBLE FOR THE ACCURACY OR COMPLETENESS OF SCANNED COPIES OF THIS PLAN SHEET.

WKE, Inc.
1851 E. FIRST STREET
SUITE 1400
SANTA ANA, CA 92705

LA METRO
ONE GATEWAY PLAZA
LOS ANGELES, CA 90012

NOTES:

1. DIMENSIONS OF THE PAVEMENT STRUCTURES (STRUCTURAL SECTIONS) ARE SUBJECT TO TOLERANCES SPECIFIED IN THE STANDARD SPECIFICATIONS.
2. SUPERELEVATIONS ARE SHOWN ON THE SUPERELEVATION DIAGRAMS.

EXISTING PAVEMENT STRUCTURE SECTIONS

- A: 0.98′ AC; 0.49′ AB; 0.33′ BASE MATERIAL
- B: 0.35′ AC (TYPE B); 0.60′ LCB; 0.85′ CLASS 2 AB
- C: 1.08′ AC (TYPE B); 0.34′ CLASS 3 AB
- D: 0.49′ AC (TYPE B); 0.49′ LCB; 0.89′ CLASS 3 AB
- E: 0.20′ HMA (TYPE A); 1.00′ JPCP; 0.35′ LCB; 0.70′ CLASS 3 AB

PAVEMENT CLIMATE REGION

SOUTH COAST

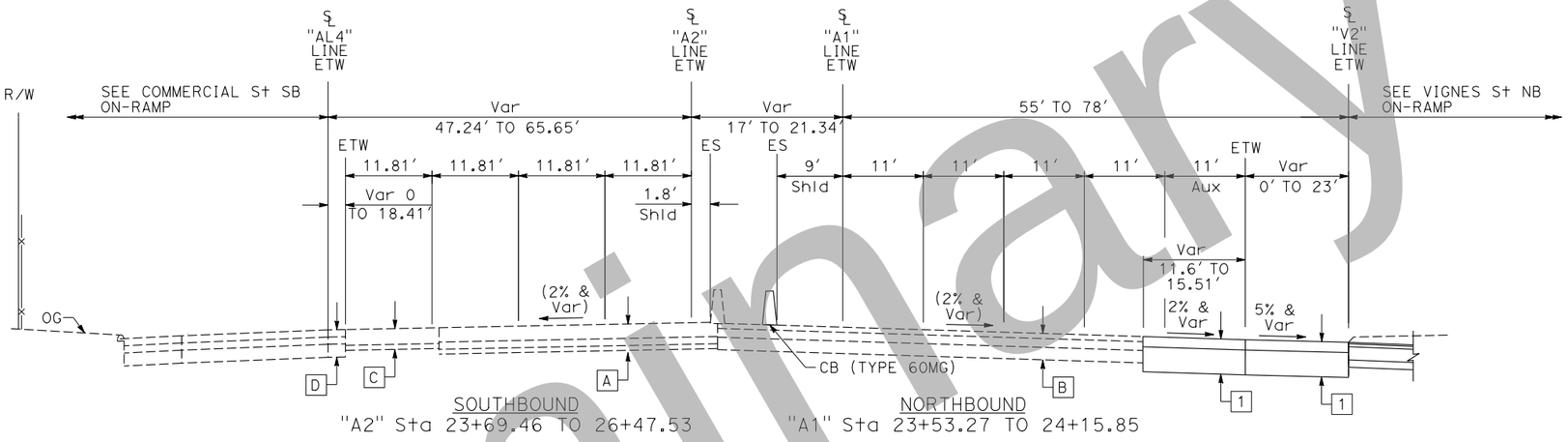

SOUTHBOUND "A2" Sta 23+69.46 TO 26+47.53

NORTHBOUND "A1" Sta 23+53.27 TO 24+15.85

TYPICAL PAVEMENT STRUCTURE SECTIONS

- 1: 0.70′ HMA (TYPE A); 1.70′ CLASS 2 AB
- 2: 0.20′ RHMA (GAP GRADED); 1.35′ HMA (TYPE A); 0.50′ CLASS 2 AB; SUBGRADE ENHANCEMENT GEOTEXTILE
- 3: 0.20′ RHMA (GAP GRADED); 1.00′ HMA (TYPE A); 0.50′ CLASS 2 AB; SUBGRADE ENHANCEMENT GEOTEXTILE
- 4: 0.33′ MINOR Conc (TEXTURED PAVING); 0.50′ CLASS 2 AB
- 5: 1.00′ JPCP; 0.25′ HMA (TYPE A)

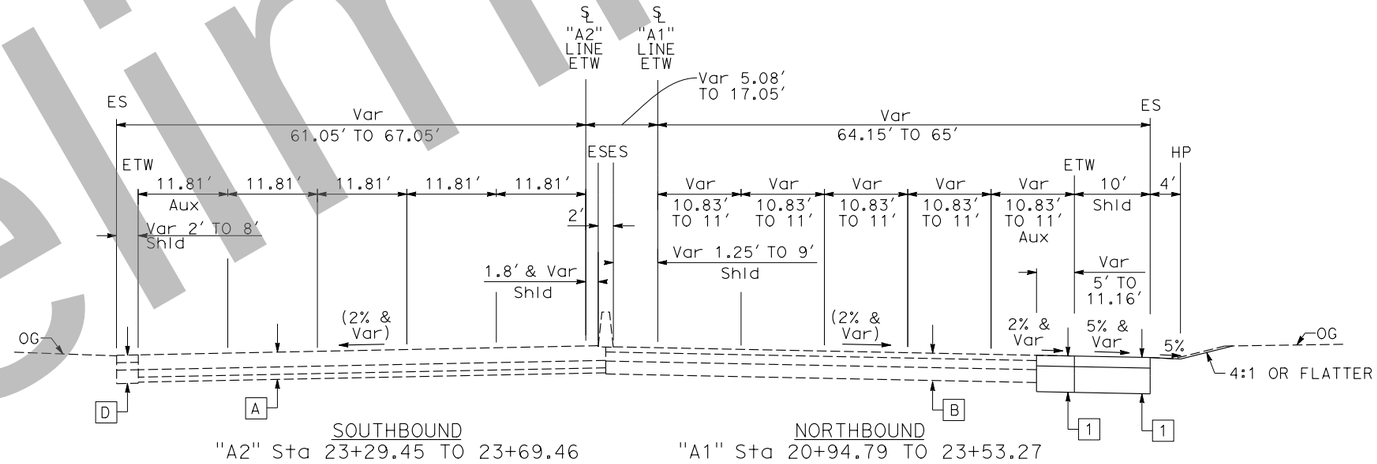

SOUTHBOUND "A2" Sta 23+29.45 TO 23+69.46

NORTHBOUND "A1" Sta 20+94.79 TO 23+53.27

US-101

Preliminary

Original plan submittal made in Aug. 2019

Rev No.	Date	Description
1	3/21	Additional pavement structural sections included
2	12/21	
3	6/22	

TYPICAL CROSS SECTIONS

NO SCALE

SHEET NO 106

X-1

35% PLANS - NOT FOR CONSTRUCTION

LAST REVISION 3/05/2021
DATE PLOTTED => 18-MAR-2020
TIME PLOTTED => 13:58

REVISED BY | DATE REVISED | - | - | CALCULATED-DESIGNED BY | CHECKED BY

CONSULTANT FUNCTIONAL SUPERVISOR: XXXX XXXXXXX

STATE OF CALIFORNIA - DEPARTMENT OF TRANSPORTATION

BORDER LAST REVISED 7/2/2010 | USERNAME => CMcguire | DGN FILE => 07150000119ca001.dgn | RELATIVE BORDER SCALE IS IN INCHES 0 1 2 3 | UNIT XXXX | PROJECT NUMBER & PHASE 07150001191

Dist	COUNTY	ROUTE	POST MILES TOTAL PROJECT	SHEET No.	TOTAL SHEETS
07	LA	10S, 101	17.2/17.5, 0.4/0.7	3	34

REGISTERED CIVIL ENGINEER DATE

PLANS APPROVAL DATE

REGISTERED PROFESSIONAL ENGINEER No. Exp. CIVIL STATE OF CALIFORNIA

THE STATE OF CALIFORNIA OR ITS OFFICERS OR AGENTS SHALL NOT BE RESPONSIBLE FOR THE ACCURACY OR COMPLETENESS OF SCANNED COPIES OF THIS PLAN SHEET.

WKE, Inc.
1851 E. FIRST STREET
SUITE 1400
SANTA ANA, CA 92705

LA METRO
ONE GATEWAY PLAZA
LOS ANGELES, CA 90012

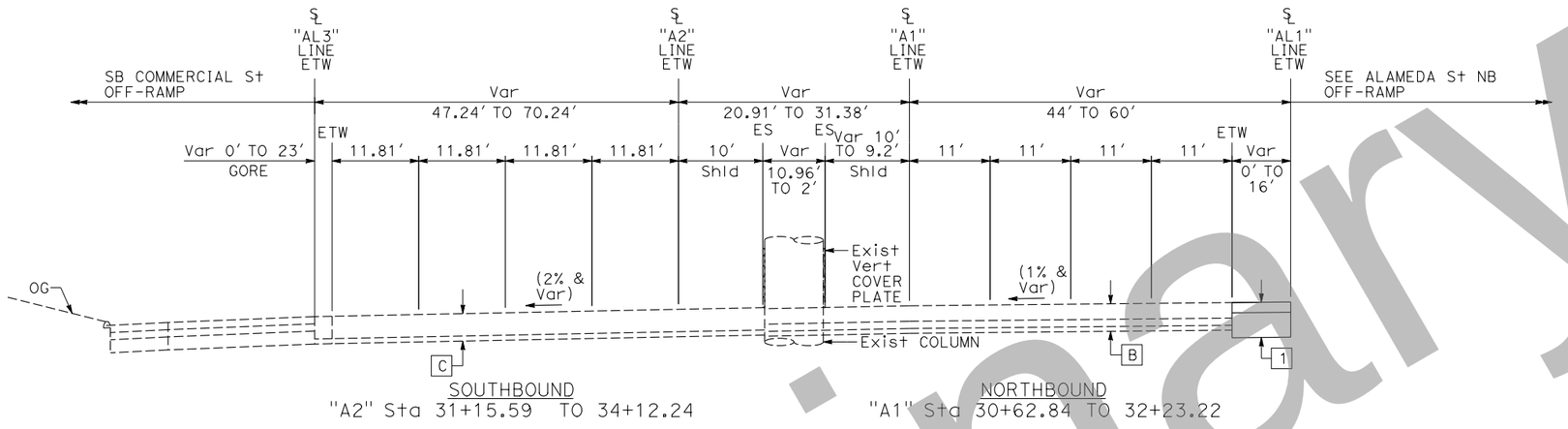

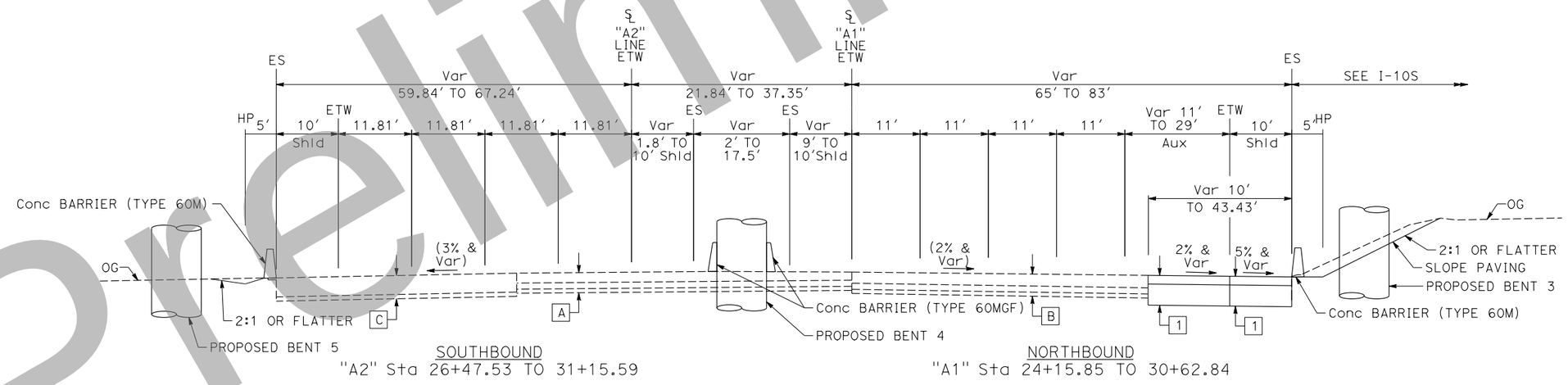

Preliminary

US-101

TYPICAL CROSS SECTIONS

NO SCALE

SHEET NO 107

X-2

35% PLANS - NOT FOR CONSTRUCTION

Original plan submittal made in Aug. 2019

Rev No.	Date	Description
1	3/21	
2	12/21	
3	6/22	

REVISED BY | DATE REVISED | - | -

CALCULATED-DESIGNED BY | CHECKED BY

CONSULTANT FUNCTIONAL SUPERVISOR: XXXX XXXXXXX

STATE OF CALIFORNIA - DEPARTMENT OF TRANSPORTATION

Caltrans

LAST REVISION 8/01/2019 | DATE PLOTTED => 18-MAR-2020 | TIME PLOTTED => 13:58

BORDER LAST REVISED 7/2/2010 "A2" "A1" LINE LINE | USERNAME => CMcguire | DGN FILE => 07150001191ca002.dgn | RELATIVE BORDER SCALE IS IN INCHES 0 1 2 3 | UNIT XXXX | PROJECT NUMBER & PHASE 07150001191

Dist	COUNTY	ROUTE	POST MILES TOTAL PROJECT	SHEET No.	TOTAL SHEETS
07	LA	10S, 101	17.2/17.5, 0.4/0.7	4	34

REGISTERED CIVIL ENGINEER DATE

PLANS APPROVAL DATE

REGISTERED PROFESSIONAL ENGINEER — No. Exp. CIVIL — STATE OF CALIFORNIA

THE STATE OF CALIFORNIA OR ITS OFFICERS OR AGENTS SHALL NOT BE RESPONSIBLE FOR THE ACCURACY OR COMPLETENESS OF SCANNED COPIES OF THIS PLAN SHEET.

WKE, Inc.
1851 E. FIRST STREET
SUITE 1400
SANTA ANA, CA 92705

LA METRO
ONE GATEWAY PLAZA
LOS ANGELES, CA 90012

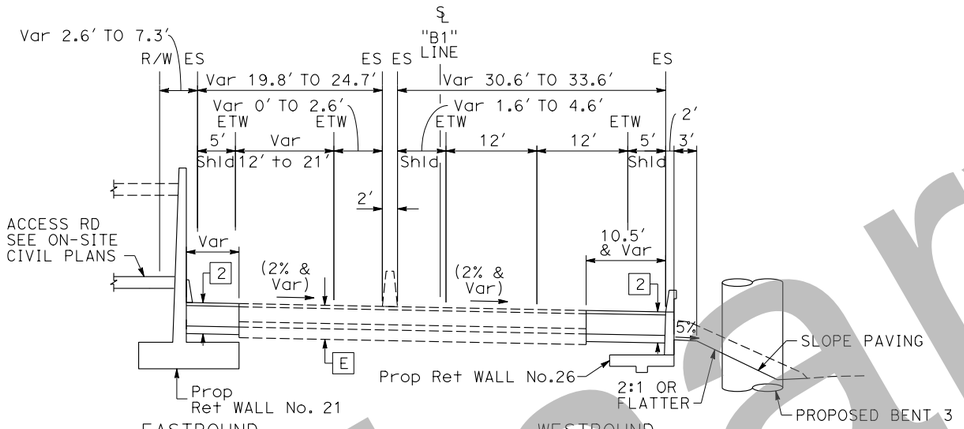

"B1" Sta 21+44.81 TO 27+27.75 "B1" Sta 25+00.09 TO 27+49.35

I-10S

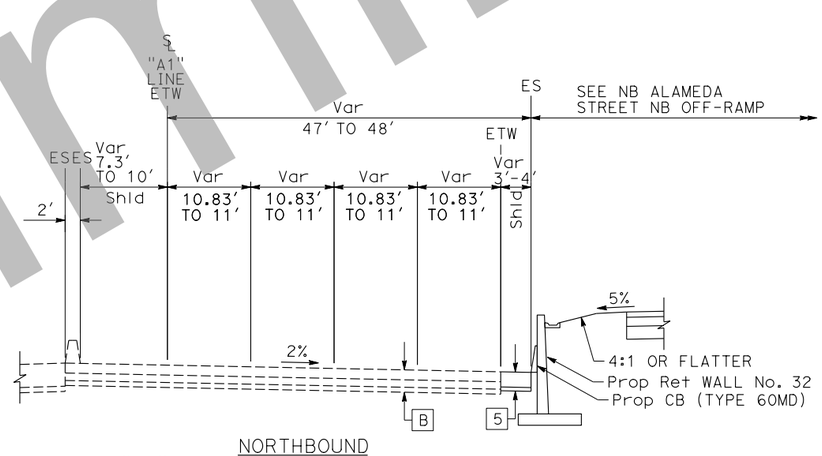

"A1" Sta 32+23.22 TO 34+04.09

US-101

Original plan submittal made in Aug. 2019

Rev No.	Date	Description
1	3/21	
2	12/21	
3	6/22	

TYPICAL CROSS SECTIONS

NO SCALE

SHEET NO 108

X-3

35% PLANS - NOT FOR CONSTRUCTION

Preliminary

STATE OF CALIFORNIA - DEPARTMENT OF TRANSPORTATION — Caltrans

CONSULTANT FUNCTIONAL SUPERVISOR: XXXX XXXXXXX

CALCULATED-DESIGNED BY

CHECKED BY

REVISED BY: -

DATE REVISED: -

LAST REVISION 8/01/2019

DATE PLOTTED => 18-MAR-2020
TIME PLOTTED => 13:58

BORDER LAST REVISED 7/2/2010

USERNAME => CMcguire
DGN FILE => 0715000119ca003.dgn

RELATIVE BORDER SCALE IS IN INCHES 0 1 2 3

UNIT XXXX

PROJECT NUMBER & PHASE 07150001191

Dist	COUNTY	ROUTE	POST MILES TOTAL PROJECT	SHEET No.	TOTAL SHEETS
07	LA	10S, 101	17.2/17.5, 0.4/0.7	5	34

REGISTERED CIVIL ENGINEER DATE

PLANS APPROVAL DATE

REGISTERED PROFESSIONAL ENGINEER No. Exp. CIVIL STATE OF CALIFORNIA

THE STATE OF CALIFORNIA OR ITS OFFICERS OR AGENTS SHALL NOT BE RESPONSIBLE FOR THE ACCURACY OR COMPLETENESS OF SCANNED COPIES OF THIS PLAN SHEET.

WKE, Inc.
1851 E. FIRST STREET
SUITE 1400
SANTA ANA, CA 92705

LA METRO
ONE GATEWAY PLAZA
LOS ANGELES, CA 90012

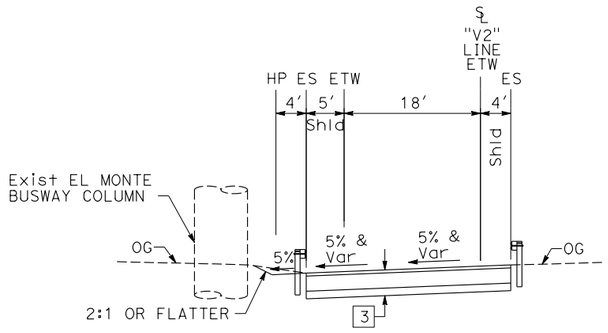

"V2" Sta 11+75.00 TO 13+07.11

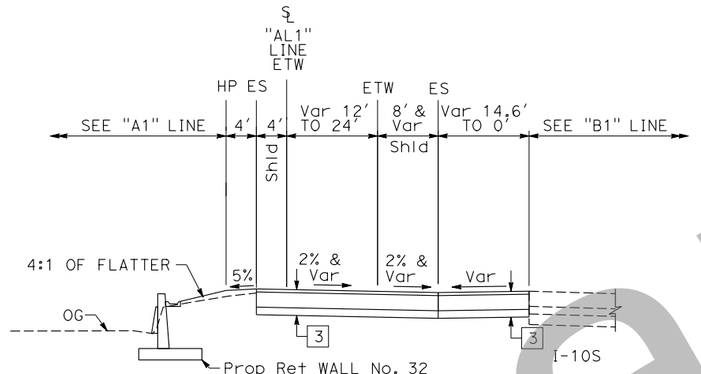

"AL1" Sta 32+17.26 TO 33+58.92

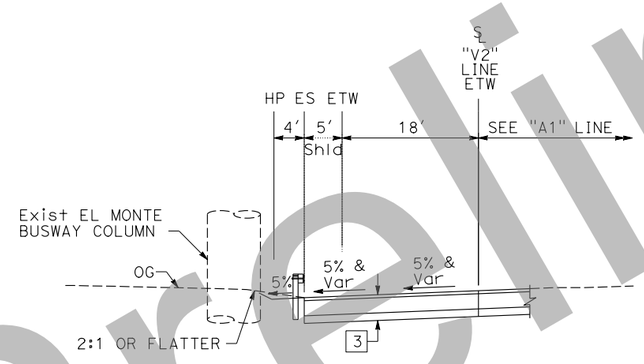

"V2" Sta 11+07.11 TO 11+75.00

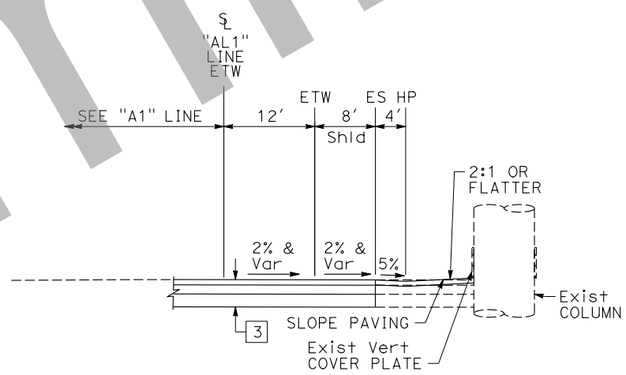

"AL1" Sta 30+62.84 TO 32+17.26

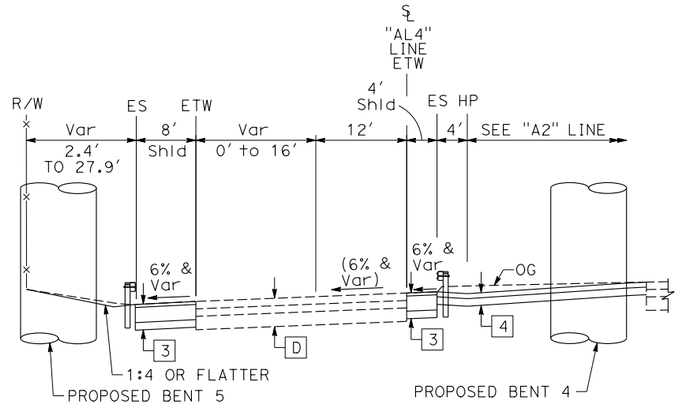

"AL4" Sta 23+69.46 TO 28+19.55

VIGNES STREET NB ON-RAMP

ALAMEDA STREET NB OFF-RAMP

COMMERCIAL STREET SB ON-RAMP

Original plan submittal made in Aug. 2019

Rev No.	Date	Description
1	3/21	
2	12/21	
3	6/22	

TYPICAL CROSS SECTIONS

NO SCALE

SHEET NO 109

X-4

35% PLANS - NOT FOR CONSTRUCTION

LAST REVISION 8/01/2019
DATE PLOTTED => 18-MAR-2020
TIME PLOTTED => 13:58

REVISED BY | DATE REVISED | - | -

CALCULATED-DESIGNED BY | CHECKED BY

CONSULTANT FUNCTIONAL SUPERVISOR: XXXX XXXXXX

STATE OF CALIFORNIA - DEPARTMENT OF TRANSPORTATION

Caltrans

Preliminary

BORDER LAST REVISED 7/2/2010 | USERNAME => CMcguire | DGN FILE => 0715000119ca004.dgn | RELATIVE BORDER SCALE IS IN INCHES 0 1 2 3 | UNIT XXXX | PROJECT NUMBER & PHASE 07150001191

Dist	COUNTY	ROUTE	POST MILES TOTAL PROJECT	SHEET No.	TOTAL SHEETS
07	LA	10S, 101	17.2/17.5, 0.4/0.7	6	34

REGISTERED CIVIL ENGINEER DATE

PLANS APPROVAL DATE

REGISTERED PROFESSIONAL ENGINEER No. Exp. CIVIL STATE OF CALIFORNIA

THE STATE OF CALIFORNIA OR ITS OFFICERS OR AGENTS SHALL NOT BE RESPONSIBLE FOR THE ACCURACY OR COMPLETENESS OF SCANNED COPIES OF THIS PLAN SHEET.

WKE, Inc.
1851 E. FIRST STREET
SUITE 1400
SANTA ANA, CA 92705

LA METRO
ONE GATEWAY PLAZA
LOS ANGELES, CA 90012

NOTE:

FOR ACCURATE RIGHT OF WAY DATA, CONTACT RIGHT OF WAY ENGINEERING AT THE DISTRICT OFFICE.

LEGEND

- DIRECTION OF TRAFFIC
- Prop HIGHWAY PLANTING & IRRIGATION SYSTEM
- STAMPED CONCRETE

ABBREVIATION

AITS - ALTERNATIVE IN-LINE TERMINAL SYSTEM
EAA - END ANCHOR ASSEMBLY
ISS - INSTALL SIGN STRUCTURE

G83-1(Mod)(CA) (156" x 70")
Spring St
1/2 MILE
OS-2

G85-2(Mod)(CA) (252" x 70")
Alameda St
Union Station ONLY
OS-1

G83-5(Mod)(CA) (192" x 90")
G70-2(CA)
EXIT 1E
Mission Rd
1/4 MILE
OS-3

LAUS VIADUCT OVER US-101 SEE STRUCTURE PLANS

COMMERCIAL STREET
CENTER STREET
VIGNES STREET
GAREY STREET
RAMIREZ STREET
ARCADIA ST

SB US 101
NB US 101
WB I-10S
EB I-10S

SB ON-RAMP
NB ON-RAMP
NB OFF-RAMP
SB OFF-RAMP

"AL4" +32.99
Beg CL FENCE (TYPE CL-6) JOIN Exist

"AL3" 26+72.64 POT
"AL4" 28+81.53 POT
S 08°45'32" W 32.81'
"AL4" 28+48.72 EC
7.5' Rt "AL4" +78.65
Beg CB (TYPE 60M)
Beg 50' TAPER
CRASH CUSHION (TYPE U11)
4' Rt "AL4" +80.57
Beg CB (TYPE 60M)
"AL4" +08.15
END CL FENCE (TYPE CL-6), JOIN Exist
68.66' Lt "A2" +46.91

N 08°45'10" E, 22.11'
"AL3" 26+94.75 BC
+23.13
JOIN Exist
CRASH CUSHION (TYPE SCI-100GM)

5' Rt "AL4" +64.32
END CB (TYPE 60M)
"AL4" 26+14.74 PCC
9' Lt "A1" +80.03
Beg Shld TAPER

N 87°44'07" W 111.76'
"AL4" 23+69.46 POT = 47.24' Lt "A2" 23+69.46 POC
10' Lt "A1" +31.83
Beg CB (TYPE 60MG) JOIN Exist
"A2" 23+30.78 EC

40.05' Rt "AL4" +35.00
END CB (TYPE 60M)
10' Rt "A2" +30.00
Beg CB (TYPE 60MGF) JOIN Exist

+47.42
JOIN Exist
5' Rt "AL3" +00.00
Beg CB (TYPE 60M)
"A2" 29+02.32 BC
"AL3" 29+09.67 EC
N 84°32'05" W 496.28'
OS-3 ISS

"A2" 18+96.27 POT
N 80°46'28" W 253.29'
"A2" LINE
"A1" 18+96.58 POT
4.14' Rt "A2" 19+05.37 POT
N 80°30'07" W 524.27'
"A2" 21+49.56 BC
"AL4" LINE
"AL4" 24+81.22 BC
N 85°29'28" W 571.53'
"A1" 24+20.85 BC
"A1" 24+22.18
"AL3" LINE
REMOVE SIGN STRUCTURE
MATCH LINE "A2" +50

54.13' Rt "A1" +94.79
Beg Taper
JOIN Exist 55' Rt "A1" +44.79
END Taper
"V1" 12+75.59 EC
65' Rt "A1" +03.27
Beg MGS, AITS
ISS OS-3
"V1" 15+36.23 POT
57.61' Rt "A2" 19+02.96 POT
"V1" 10+86.62 BC
S 10°38'27" E, 11.73'
"V1" 10+74.89 EC
"V2" 13+07.11
JOIN Exist
"V1" 10+53.69 BC
S 04°34'03" E, 45.51'
"V1" 10+08.18 EC
"V2" 13+89.25 EC
"V1" 09+73.62 BC
S 09°34'35" W, 161.17'
"V1" LINE
"V1" 08+12.45 POT
"V2" 15+61.17 POT
"V2" LINE
4' R+ "V2" +71.97
Beg CB (TYPE 60M)
+31
℄ MVP
65' Rt "A1" +53.27
END MGS EAA
"A1" 24+20.85 BC
"A1" 24+22.18
9.3' Lt "A1" +22.23
END CB (TYPE 60MG)
Beg CB (TYPE 60MGF)
81.45' Lt "A1" +89.54
END CB (TYPE 60M)
Beg 40' TAPER
CRASH CUSHION (TYPE U11)
"V2" 11+07.11 POT = 55' Rt "A1" 24+15.85 POT
"V2" 11+09.75 BC
73' Rt "A1" +16.23
Beg 30:1 LANE TAPER
23' Lt "V1" +34.38
END MGS, EAA
NB ON-RAMP
23' Lt "V2" +66.32
END MGS, AITS
5' Rt "V2" +50.00
BEG 50' TAPER
"V2" 12+67.75 EC
N 03°00'13" E, 64.14'
"V2" 13+31.89 BC
9' Rt "V2" +13.00
END CB (TYPE 60M)
JOIN Exist
N 09°34'35" E, 171.92'
OS-1 ISS
"B1" LINE
Prop AUSTIN VAULT SAND FILTER
"A1" +04.49
Beg REMOVE Ret WALL
46.88' Rt "B1" +65.95
END Ret WALL NO.26 (TYPE 1)
10' Lt "A1" +90.11
END Shld TAPER
27.82' Lt "B1" +27.53
END Ret WALL NO.21 (SEE STRUCTURE PLANS)
END REMOVE Ret WALL
34.44' Rt "B1" +89.31
END Ret WALL NO.26 (TYPE 5)
Beg Ret WALL NO.26 (TYPE 1)
RW NO. 26
L=363.75, Avg H=10
RW NO. 21
L=583, Avg H=10
ACCESS ROAD
55' Rt "A1" +56.23
Beg 30:1 LANE TAPER
"A1" +61.24
END REMOVE Ret WALL
26.94' Rt "B1" +99.96
Beg Ret WALL NO.26 (TYPE 5)
"B1" 24+61.56 BC
66' Rt "A1" +19.86
Beg CB (TYPE 60M)
N 89°47'41" E 144.79'

Original plan submittal made in Aug. 2019		
Rev No.	Date	Description
1	3/21	Stamped concrete added in ramp areas
2	12/21	
3	6/22	

CURVE DATA

No.	R	Δ	T	L
(1)	4000.00'	10°13'36"	357.93'	713.95'
(3)	2201.44'	04°43'0"	90.66'	181.23'
(4)	4160.00'	03°54'45"	142.09'	284.07'
(5)	166.00'	65°13'26"	106.21'	188.97'
(6)	200.00'	06°04'24"	10.61'	21.20'
(7)	140.00'	14°08'38"	17.37'	34.56'
(8)	500.00'	06°34'23"	28.71'	57.36'
(9)	95.00'	95°17'43"	104.21'	158.01'
(10)	3280.83'	02°19'55"	66.77'	133.52'
(11)	165.15'	81°10'26"	141.49'	233.98'
(12)	132.00'	93°17'15"	139.80'	214.92'
(14)	4300.00'	13°28'42"	508.11'	1011.54'

LAYOUT

SCALE: 1" = 50'

SHEET NO 110

L-1

35% PLANS - NOT FOR CONSTRUCTION

DATE PLOTTED => 27-MAR-2020
TIME PLOTTED => 11:17

LAST REVISION 3/05/21

REVISED BY | DATE REVISED
CALCULATED-DESIGNED BY | CHECKED BY
SULTANT FUNCTIONAL SUPERVISOR | XXXX XXXXXXX
STATE OF CALIFORNIA - DEPARTMENT OF T

Caltrans

BORDER LAST REVISED 7/2/2010

USERNAME => RQuach
DGN FILE => 0715000119ea001.dgn

RELATIVE BORDER SCALE IS IN INCHES 0 1 2 3

UNIT XXXX

PROJECT NUMBER & PHASE 07150001191

Preliminary

NOTE:

FOR ACCURATE RIGHT OF WAY DATA, CONTACT
RIGHT OF WAY ENGINEERING AT THE DISTRICT OFFICE.

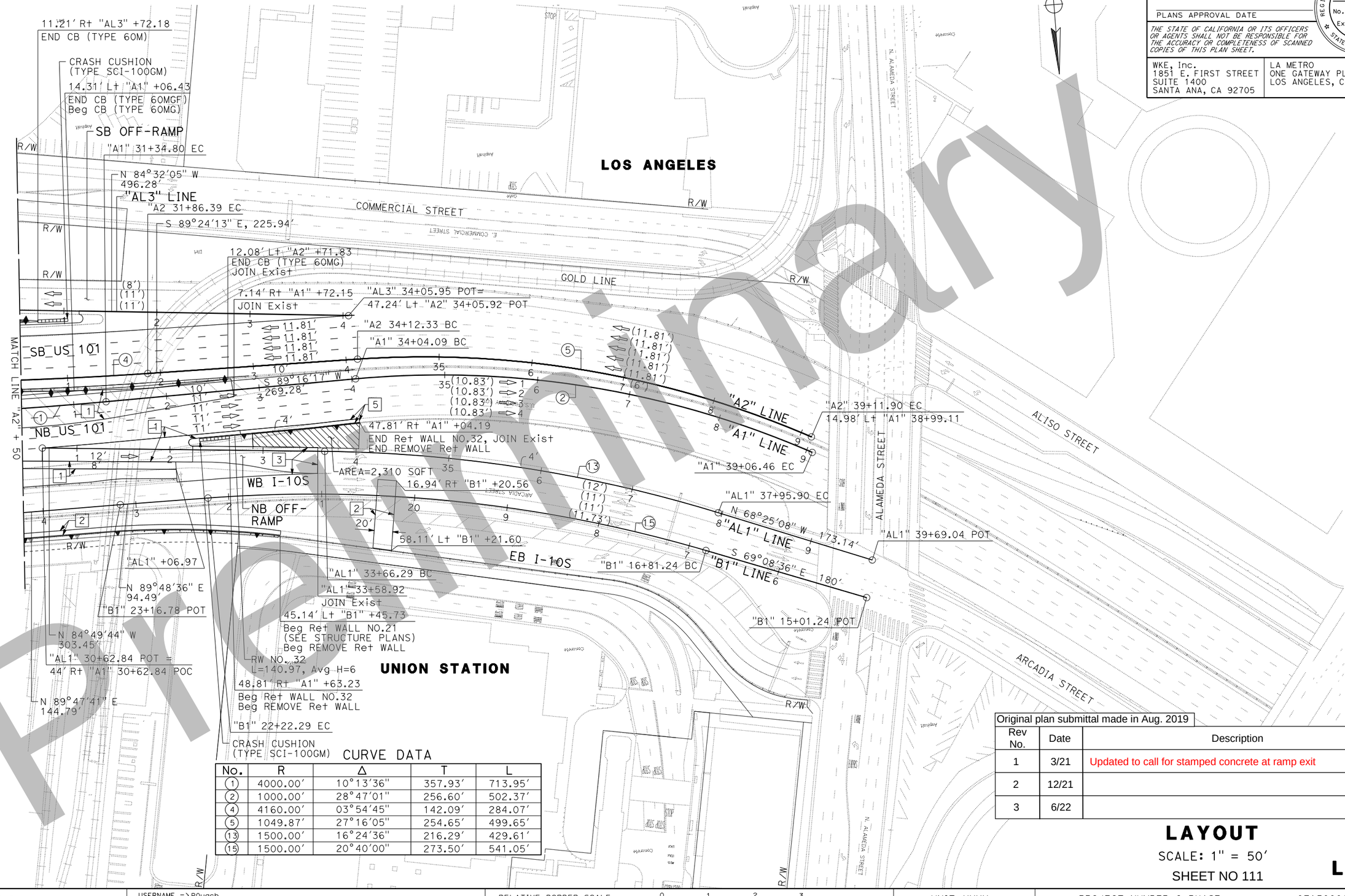

CURVE DATA

No.	R	Δ	T	L
1	4000.00'	10°13'36"	357.93'	713.95'
2	1000.00'	28°47'01"	256.60'	502.37'
4	4160.00'	03°54'45"	142.09'	284.07'
5	1049.87'	27°16'05"	254.65'	499.65'
13	1500.00'	16°24'36"	216.29'	429.61'
15	1500.00'	20°40'00"	273.50'	541.05'

Dist	COUNTY	ROUTE	POST MILES TOTAL PROJECT	SHEET No.	TOTAL SHEETS
07	LA	10S, 101	17.2/17.5, 0.4/0.7	7	34

REGISTERED CIVIL ENGINEER DATE

PLANS APPROVAL DATE

REGISTERED PROFESSIONAL ENGINEER No. Exp. CIVIL STATE OF CALIFORNIA

THE STATE OF CALIFORNIA OR ITS OFFICERS OR AGENTS SHALL NOT BE RESPONSIBLE FOR THE ACCURACY OR COMPLETENESS OF SCANNED COPIES OF THIS PLAN SHEET.

WKE, Inc.
1851 E. FIRST STREET
SUITE 1400
SANTA ANA, CA 92705

LA METRO
ONE GATEWAY PLAZA
LOS ANGELES, CA 90012

Original plan submittal made in Aug. 2019

Rev No.	Date	Description
1	3/21	Updated to call for stamped concrete at ramp exit
2	12/21	
3	6/22	

LAYOUT

SCALE: 1" = 50'

SHEET NO 111

L-2

35% PLANS - NOT FOR CONSTRUCTION

DATE PLOTTED => 27-MAR-2020
TIME PLOTTED => 17:14

LAST REVISION 3/05/21

REVISED BY - DATE REVISED

CALCULATED-DESIGNED BY - CHECKED BY

CONSULTANT FUNCTIONAL SUPERVISOR XXXX XXXXXXX

STATE OF CALIFORNIA - DEPARTMENT OF TRANSPORTATION

Caltrans

Preliminary

BORDER LAST REVISED 7/2/2010 | USERNAME => RQuach | DGN FILE => 0715000119ea002.dgn | RELATIVE BORDER SCALE IS IN INCHES 0 1 2 3 | UNIT XXXX | PROJECT NUMBER & PHASE 07150001191

Dist	COUNTY	ROUTE	POST MILES TOTAL PROJECT	SHEET No.	TOTAL SHEETS
07	LA	10S, 101	17.2/17.5, 0.4/0.7	34	34

REGISTERED CIVIL ENGINEER — DATE

PLANS APPROVAL DATE

REGISTERED PROFESSIONAL ENGINEER — KATIE L. HICKEY — No. C82783 — Exp. 9/30/20 — CIVIL — STATE OF CALIFORNIA

THE STATE OF CALIFORNIA OR ITS OFFICERS OR AGENTS SHALL NOT BE RESPONSIBLE FOR THE ACCURACY OR COMPLETENESS OF SCANNED COPIES OF THIS PLAN SHEET.

WKE, Inc.
1851 EAST FIRST STREET, SUITE 1400
SANTA ANA, CA 92705

METROPOLITAN TRANSPORTATION AUTHORITY
ONE GATEWAY PLAZA
LOS ANGELES, CA 90012

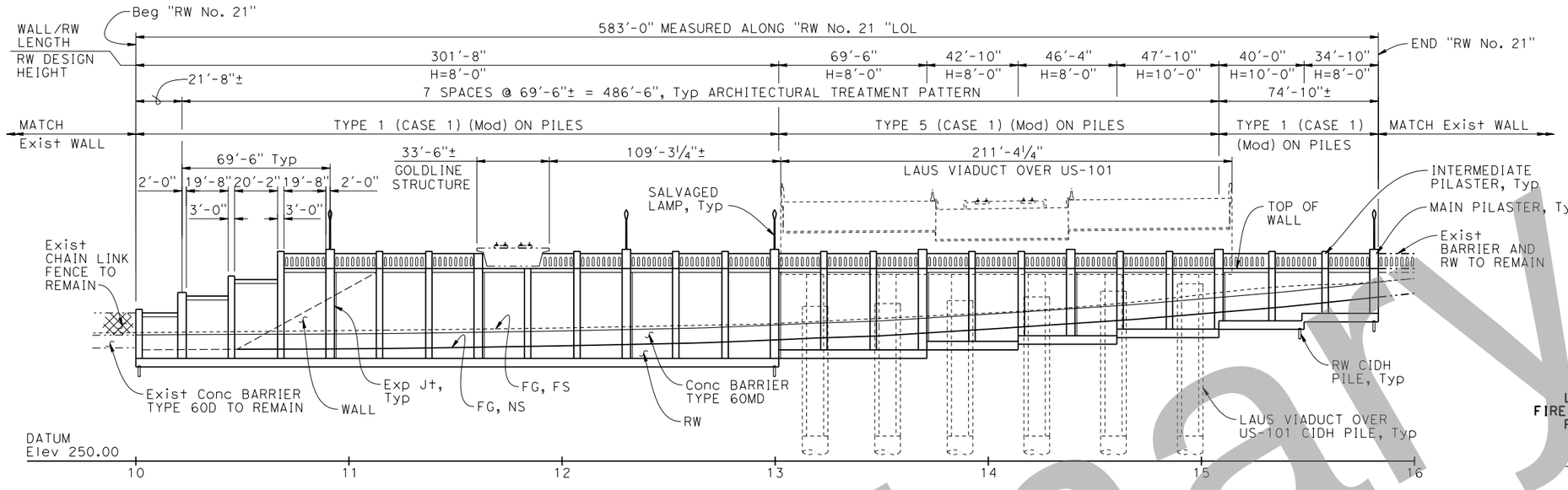

DEVELOPED ELEVATION

Horiz 1" = 30'
Vert 1" = 15'

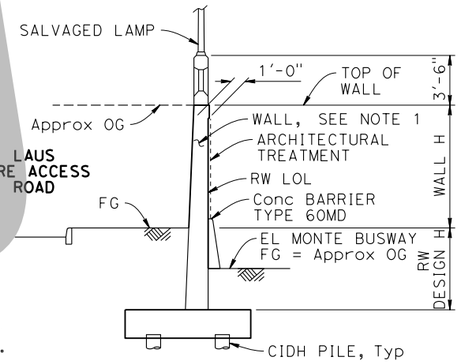

NOTE:
1. Removal of exist retaining wall not shown for clarity.

TYPE 1 (CASE 1) (MOD) ON PILES

3/16" = 1'-0"

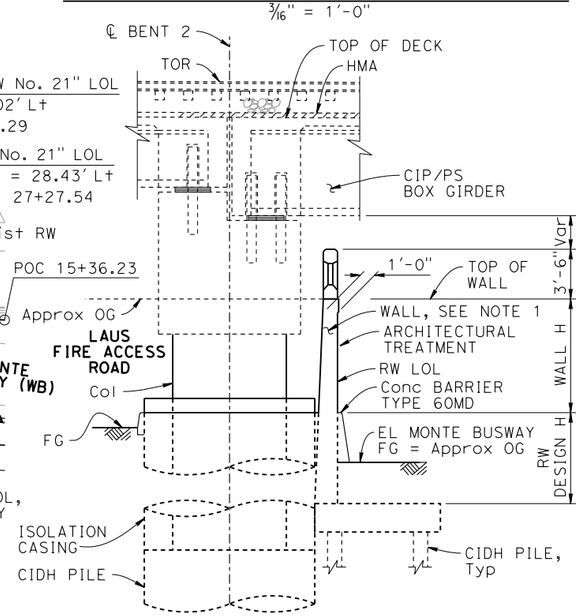

TYPE 5 (CASE 1) (MOD) ON PILES

3/16" = 1'-0"

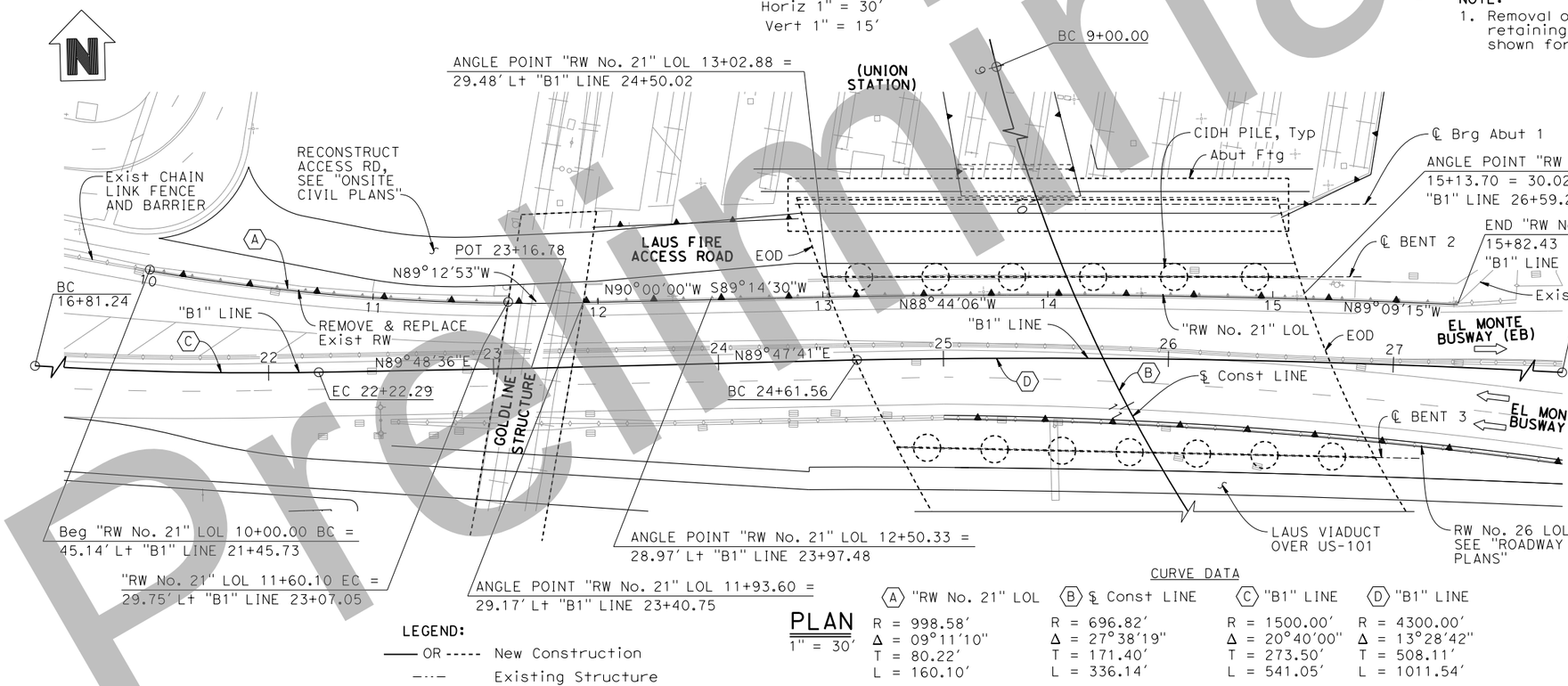

PLAN

1" = 30'

LEGEND:
—— OR ----- New Construction
–·–·– Existing Structure

CURVE DATA

Ⓐ "RW No. 21" LOL	Ⓑ ℄ Const LINE	Ⓒ "B1" LINE	Ⓓ "B1" LINE
R = 998.58'	R = 696.82'	R = 1500.00'	R = 4300.00'
Δ = 09°11'10"	Δ = 27°38'19"	Δ = 20°40'00"	Δ = 13°28'42"
T = 80.22'	T = 171.40'	T = 273.50'	T = 508.11'
L = 160.10'	L = 336.14'	L = 541.05'	L = 1011.54'

TYPE SELECTION PLANS - NOT FOR CONSTRUCTION

Preliminary

Original plan submittal made in Aug. 2019

Rev No.	Date	Description
1	3/21	Updated to show latest structural design of US-101 viaduct
2	12/21	
3	6/22	

LOAD & RESISTANCE FACTOR DESIGN — LIVE LOADING: SEE "GENERAL NOTES" SHEET
LAYOUT — BY: K. Hickey — CHECKED: V. Trinh
SPECIFICATIONS — BY: X — PLANS AND SPECS COMPARED: X

DATE PLOTTED => 01-APR-2020 TIME PLOTTED => 10:52
FILE => zf-rwgp-CMG.dgn USERNAME => TDoung
ORIGINAL SCALE IN INCHES FOR REDUCED PLANS 0 1 2 3

PREPARED FOR THE STATE OF CALIFORNIA DEPARTMENT OF TRANSPORTATION

Dan Weddell
PROJECT ENGINEER

BRIDGE No. X
POST MILE 0.56

UNIT: X
PROJECT NUMBER & PHASE: X
CONTRACT No.: X

RETAINING WALL NO. 21

GENERAL PLAN

DISREGARD PRINTS BEARING EARLIER REVISION DATES →

REVISION DATES				SHEET	OF
8/01/19	3/05/21			1	1

SHEET NO 112

NOTICE TO CONTRACTORS

1. SPECIFICATIONS: ALL WORK SHALL CONFORM TO THE LATEST EDITION AND SUPPLEMENTS OF "THE STANDARD SPECIFICATIONS FOR PUBLIC WORKS CONSTRUCTION" (GREENBOOK), AND THE CORRESPONDING "ADDITIONS AND AMENDMENTS TO THE LATEST EDITION OF THE STANDARD SPECIFICATIONS FOR PUBLIC WORKS CONSTRUCTION" (BROWN BOOK).
2. THIS IMPROVEMENT CONSISTS OF WORK CALLED FOR ONLY ON THIS PLAN.
3. STANDARD PLANS FOR THIS PROJECT:

   CALTRANS
   DETAIL 8 LANE LINES
   DETAIL 21 NO PASSING ZONES - TWO DIRECTION
   DETAIL 24 EDGELINES
   STD A24B PAVEMENT MARKING SYMBOLS
   STD A24D PAVEMENT MARKING WORDS
   STD A24E PAVEMENT MARKING WORDS, LIMIT & YIELD LINES

   CAMUTCD
   CHAPTER 8 TRAFFIC CONTROL FOR RAILROAD & LIGHT RAIL TRANSIT GRADE CROSSINGS

   CITY OF LOS ANGELES
   S-410-2 TYPES OF CURB AND GUTTER
   S-430-1 JOINTS IN CONCRETE PAVEMENT
   S-432-1 STANDARD STREET CROWN SECTIONS
   S-442-3 CURB RAMPS
   S-444-0 SIDEWALKS
   S-627-0 SYMBOLS FOR CONSTRUCTION NOTES
   S-691-0 CHAINLINK FENCE & GATES

   SCRRA
   ES4002 PEDESTRIAN SWING GATE DETAILS
   ES4005 PEDESTRIAN BARRICADE & METAL HAND RAILING DETAILS
   ES4012 PEDESTRIAN FACILITIES AT VEHICLE CROSSING ENTRANCE/EXIT GATES
   ES5105 WELDED WIRE MESH FENCING

4. INSPECTION: ALL WORK AND MATERIALS SHALL BE INSPECTED BY THE INSPECTOR OF PUBLIC WORKS DURING CONSTRUCTION PURSUANT TO LATEST EDITION OF STANDARD SPECIFICATIONS FOR PUBLIC WORKS CONSTRUCTION (GREENBOOK) AS AMENDED BY THE CITY OF LOS ANGELES DEPARTMENT OF PUBLIC WORKS "BROWN BOOK", AND THE STANDARD PLANS FOR PUBLIC WORKS CONSTRUCTION AS APPLICABLE. CALL (213) 485-5080 BEFORE NOON OF THE WORKING DAY BEFORE THE FIRST SCHEDULED DAY OF CONSTRUCTION.
   PRIOR TO THE START OF ANY CONSTRUCTION, DEMOLITION, REMOVALS, SAWCUTTING, OR INSTALLATION OF TRAFFIC CONTROL THE CONTRACTOR SHALL MEET WITH THE INSPECTOR TO DISCUSS SAFETY, TRAFFIC CONTROL REQUIREMENTS, PUBLIC ACCESS, CONSTRUCTION IMPACT MITIGATION, REMOVAL LIMITS, AND CONTRACTOR'S PLANNED SEQUENCING OF OPERATIONS.
   PRIOR TO OR AT THE PROJECT PRECONSTRUCTION MEETING THE PERMITTEE OR ITS CONTRACTOR SHALL PROVIDE THE INSPECTOR TWO SETS OF FULL-SIZE PLANS AND MAINTAIN ONE SET OF FULL-SIZE PLANS AT THE SITE DURING CONSTRUCTION. INDEXED PLANS ARE AVAILABLE FROM THE CITY'S WEBSITE AT HTTP://ENGVAULT.LACITY.ORG.
5. THE CONTRACTOR, IN CONFORMANCE WITH LOS ANGELES CITY ORDINANCE NO. 150,478 SHALL POTHOLE EXISTING SUBSURFACE INSTALLATIONS CARRYING UNSTABLE SUBSTANCES TO DETERMINE THEIR LOCATIONS AND ELEVATIONS BEFORE COMMENCING EXCAVATION.
6. UNDERGROUND SERVICE ALERT: BEFORE COMMENCING ANY EXCAVATION, THE CONTRACTOR SHALL OBTAIN AN UNDERGROUND SERVICE ALERT (USA) INQUIRY I.D. NUMBER BY CALLING (800) 227-2600. TWO WORKING DAYS SHALL BE ALLOWED AFTER THE I.D. NUMBER IS OBTAINED AND BEFORE THE CONTRACTOR STARTS THE EXCAVATION WORK SO THAT UTILITY OWNERS CAN BE NOTIFIED. IF THE UTILITY OWNER IS THE CITY OF LOS ANGELES, A CONFIRMATION NUMBER INDICATING THE CITY HAS BEEN NOTIFIED SHALL BE OBTAINED BY USA AND/OR THE CONTRACTOR FROM THE APPROPRIATE CITY DEPARTMENT. THE I.D. NUMBER TOGETHER WITH THE DATE ACQUIRED SHALL BE REPORTED TO THE BUREAU OF CONTRACT ADMINISTRATION WHEN CALLING FOR INSPECTION. I.D. NUMBERS WILL NOT BE GIVEN MORE THAN 10 DAYS BEFORE STARTING EXCAVATION WORK.
7. AT LEAST THIRTY (30) DAYS BEFORE THE START OF CONSTRUCTION THE CONTRACTOR/ENGINEER SHALL CONTACT THE BUREAU OF STREET SERVICES, COORDINATING SECTION AT (213) 847-3200 TO VERIFY THAT THERE IS NO PROPOSED PROJECT IN THIS AREA.
8. NOTIFICATION: AT LEAST TEN (10) DAYS BEFORE THE START OF CONSTRUCTION, THE CONTRACTOR SHALL NOTIFY, IN WRITING, ABUTTING PROPERTY OCCUPANTS OF THE PROPOSED CONSTRUCTION START DATE. A COPY OF SAID WRITTEN NOTIFICATION SHALL BE PROVIDED TO THE PUBLIC WORKS INSPECTOR FOR APPROVAL BEFORE THEY ARE DISTRIBUTED TO THE OCCUPANTS OF THE ABUTTING PROPERTY.
9. ADVANCE CONSTRUCTION NOTICE SIGNS:
   IN ADDITION TO SIGNS REQUIRED BY THE PROVISIONS OF THE "WORK AREA TRAFFIC CONTROL HANDBOOK" (WATCH), LATEST EDITION, FURNISH AND PLACE SIGNS FOR GIVING ADVANCE NOTICE TO MOTORISTS OF TRAFFIC DISRUPTION AS PART OF THIS PROJECT IN ACCORDANCE WITH STANDARD PLAN S-791-1.
10. CUTS OR EXCAVATIONS IN STREETS THAT HAVE BEEN RESURFACED ONE YEAR OR LESS FROM THE DATE OF A PROPOSED CUT OR EXCAVATION ARE PROHIBITED UNLESS THE PERMITTEE RESURFACES THE ENTIRE BLOCK OR INTERSECTION WITHIN WHICH SUCH CUT OR EXCAVATION OCCURS, PER ORDINANCE NO. 171922, 171923, 171924, AND SPECIAL ORDER NO. 06-0807.
11. CONSTRUCTION STAKES FOR CURB AND LONGITUDINAL GUTTER, WITH GRADE LESS THAN 0.50%, SHALL BE SET AT 12.5 FEET ON CENTER.
12. REMOVALS:
    A. REMOVE ALL EXISTING IMPROVEMENTS THAT INTERFERE WITH THE CONSTRUCTION OF THIS PROJECT.
    B. ALL UTILITIES SHALL BE REMOVED OR RELOCATED BY OTHERS.
13. IN ADDITION TO THE CONSTRUCTION OF PAVEMENT SHOWN HEREON, WORK REQUIRED UNDER THIS PLAN WILL ALSO INCLUDE THE CONSTRUCTION OF PERMANENT TRENCH RESURFACING IN ALL AREAS WHERE UTILITY LINES HAVE BEEN INSTALLED TO SERVE THIS DEVELOPMENT. CONDITIONS OF TRENCH BACKFILL AND RESURFACING SHALL BE AS SPECIFIED ON THE EXCAVATION PERMIT. PAVING OF ROADWAY AREAS SHALL BE WITHHELD UNTIL CONTEMPLATED UTILITY CHANGES OR INSTALLATIONS HAVE BEEN MADE UNDER CITY PERMIT.
14. REPAIR AND/OR REPLACE ANY EXISTING BROKEN OR OFF-GRADE PAVEMENT, CONCRETE CURB, GUTTER OR SIDEWALK IMMEDIATELY ADJACENT TO OR WITHIN THE AREA OF THIS IMPROVEMENT SATISFACTORY TO THE CITY ENGINEER.
15. SURVEY MONUMENT PRESERVATION IS REQUIRED AND SHALL INCLUDE SUBMITTAL OF PRE AND POST CONSTRUCTION SURVEY MONUMENT TIES TO BOTH HORIZONTAL AND VERTICAL CONTROL POINTS PUBLISHED IN THE LOS ANGELES CITY ENGINEER FIELD BOOKS AND PRECISE BENCHMARK BOOKS. THIS DOES NOT RELIEVE THE CONTRACTOR OF FULFILLING ANY ADDITIONAL REQUIREMENTS SET FORTH BY SECTIONS 2-9.1 AND 2-9.3 OF THE LATEST EDITION OF THE STANDARD SPECIFICATIONS FOR PUBLIC WORKS CONSTRUCTION (GREENBOOK AND BROWN BOOK).
16. IMPORTANT NOTICE: ALL REQUIRED PUBLIC IMPROVEMENTS MUST BE COMPLETED BEFORE A TEMPORARY CERTIFICATE OF OCCUPANCY OR A CERTIFICATE OF OCCUPANCY WILL BE ISSUED FOR THIS PROJECT PER ORDINANCE NO. 165081.
17. TRAFFIC LANE REQUIREMENTS:
    (List any special lane requirements by DOT, subject to concurrence by the District office).
    OR
    THE LATEST EDITION AND SUPPLEMENTS OF THE STANDARD SPECIFICATIONS FOR PUBLIC WORKS CONSTRUCTION (GREENBOOK) AND THE CORRESPONDING ISSUE OF THE "BROWN BOOK" WILL BE SATISFACTORY FOR TRAFFIC AND ACCESS. TRAFFIC CONTROL SHALL BE IN ACCORDANCE WITH THE LATEST EDITION OF THE "WORK AREA TRAFFIC CONTROL HANDBOOK" (WATCH) ADOPTED BY THE BOARD OF PUBLIC WORKS OF THE CITY OF LOS ANGELES.



KEY MAP

SCALE: 1"=500'

SHEET LIST - MAIN STREET IMPROVEMENTS

1.0 TITLE SHEET
2.0 ABBREVIATIONS & SYMBOLS
3.0 TYPICAL STREET SECTIONS
4.0 STREET IMPROVEMENT PLAN
4.1 STREET IMPROVEMENT PLAN
4.2 CURB RAMP DETAILS

Rev No.	Date	Description
1	3/21	Plan added to set
2	12/21	
3	6/22	

Preliminary

35% DESIGN PLANS

NOT FOR CONSTRUCTION

	DATE	BY	APP	REG NO	EXPIRES	SEAL HOLDER	DESCRIPTION

DESIGNED BY JD/RG
DRAWN BY JD
CHECKED BY RG
IN CHARGE WS
DATE 05/15/2020

Metro
LOS ANGELES COUNTY
METROPOLITAN TRANSPORTATION AUTHORITY

AECOM

LIN Consulting, Inc.
Traffic, Civil, and Electrical Consulting Engineers
21660 COPLEY DRIVE, SUITE 270
DIAMOND BAR, CALIFORNIA 91765
TEL:(909)396-6850 FAX:(909)396-8150

LINK UNION STATION PROJECT
NORTH MAIN STREET QUIET ZONE
TITLE SHEET

CONTRACT NO
DRAWING NO 1.0
REV
SCALE AS SHOWN
SHEET NO 113

Drawing Name: C:\projectwise\working\rfritcsvrad3.lci.local_lin-projectwiselci_rgaliura\d0105416\P9575-C01-Title Sheet.dwg
Last Plotted : August 3, 2019 - 10:36AM by:RGaliura

ABBREVIATION	DESCRIPTION
'	INCH
"	FEET
&	AND
@	AT
A/C, A.C.	ASPHALT CONCRETE
AVE	AVENUE
CALTRANS	STATE OF CALIFORNIA DEPARTMENT OF TRANSPORTATION
CAMUTCD	CALIFORNIA MANUAL OF UNIFORM TRAFFIC CONTROL DEVICES
C/L	CENTERLINE
COMM	COMMUNICATIONS
E	ELECTRICAL
E(OH)	ELECTRICAL (OVERHEAD)
FWY	FREEWAY
G	GAS
GV	GAS VALVE
H	HORIZONTAL
IN	INCH
LADOT	CITY OF LOS ANGELES DEPARTMENT OF TRANSPORTATION
LP	LIGHT POLE
N'LY	NORTHERLY
NO	NUMBER
O.C.	ON CENTER
PP	POWER POLE
REV	REVISION
R/W	RIGHT OF WAY
S	SEWER
SCRRA	SOUTHERN CALIFORNIA REGIONAL RAIL AUTHORITY
SD	STORM DRAIN
SH	SHEET
S'LY	SOUTHERLY
ST	STREET
STD	STANDARD
T	TELEPHONE
TYP	TYPICAL
V	VERTICAL
W	WATER
WM	WATER METER
WV	WATER VALVE

LEGEND

- RIGHT OF WAY
- CENTER LINE
- COMM — COMMUNICATIONS LINE
- GUY — ELECTRICAL GUY LINE
- E — ELECTRICAL LINE
- E(OH) — ELECTRICAL OVERHEAD LINE
- G — GAS LINE
- S — SEWER LINE
- SD — STORM DRAIN LINE
- W — WATER LINE
- ABANDONED UTILITY
- FENCE
- RETAINING WALL
- COLDMILL 1-1/2IN. AC OVERLAY
- RAILROAD CROSSING GATE
- PEDESTRIAN CROSSING GATE
- ADA PATH OF TRAVEL
- CURB RAMP
- SERVICE PANEL
- TYPE 332 TRAFFIC SIGNAL CONTROLLER WITH SIGNAL PREEMPTION AT RAILROAD CROSSING
- TRAFFIC SIGNAL MAST ARM
- STREET LIGHT
- LED STREET LIGHT

Preliminary

Rev No.	Date	Description
1	3/21	Plan added to set
2	12/21	
3	6/22	

35% DESIGN PLANS

NOT FOR CONSTRUCTION

DATE	BY	APP	REG NO	EXPIRES	SEAL HOLDER	DESCRIPTION

DESIGNED BY JD/RG
DRAWN BY JD
CHECKED BY RG
IN CHARGE WS
DATE 05/15/2020

Metro
LOS ANGELES COUNTY METROPOLITAN TRANSPORTATION AUTHORITY

AECOM

LIN Consulting, Inc.
Traffic, Civil, and Electrical Consulting Engineers
21660 COPLEY DRIVE, SUITE 270
DIAMOND BAR, CALIFORNIA 91765
TEL:(909)396-6850 FAX:(909)396-8150

LINK UNION STATION PROJECT
NORTH MAIN STREET QUIET ZONE
ABBREVIATIONS & SYMBOLS

CONTRACT NO
DRAWING NO [redacted]
REV
SCALE NTS
SHEET NO 114

Drawing Name: C:\projectwise\workingdir\lcisvrad3.lci.local_lin-projectwise\lci_rgalura\d0105416\P9575-C02-Abbv Symbol Legend.dwg
Last Plotted : August 3, 2019 - 10:25AM by:RGalura

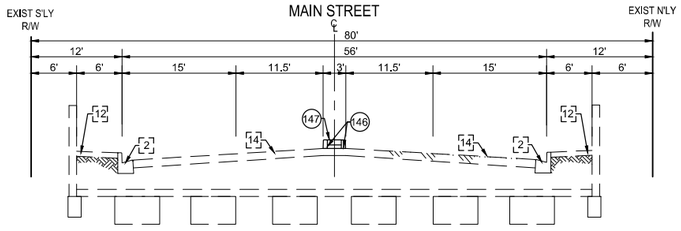

MAIN ST - BRIDGE (A)

SCALE: H:1"=10', V:1"=5'

SH 4.1

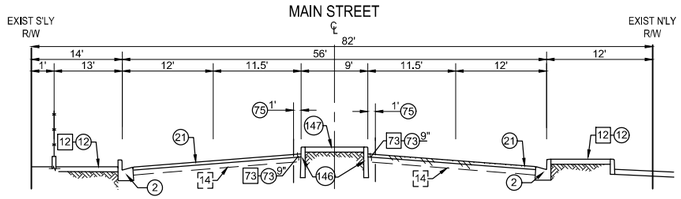

MAIN ST (B)

SCALE: H:1"=10', V:1"=5'

SH 4.1

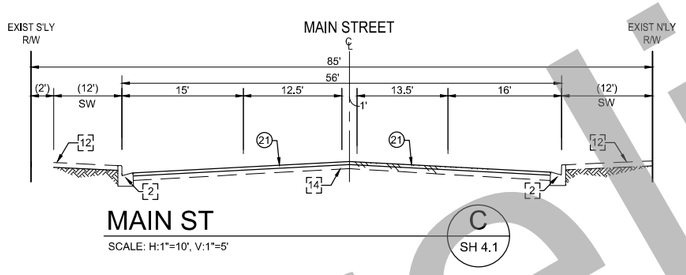

MAIN ST (C)

SCALE: H:1"=10', V:1"=5'

SH 4.1

CONSTRUCTION SYMBOLS

CONSTRUCT	REMODEL EXIST.
EXISTING	REMOVE & CONST.
REMOVE	WORK BY OTHERS

CONSTRUCTION NOTES

1. CONCRETE CURB
2. TYPE C INTEGRAL CURB & GUTTER
5. CONCRETE LONGITUDINAL GUTTER
6. CONCRETE INTERSECTION GUTTER
7. BUS PAD
8. CONCRETE PAVEMENT
10. CONCRETE DRIVEWAY
12. CONCRETE WALK
13. CURB RAMP
14. A/C PAVEMENT
21. COLDMILL 1-1/2IN A.C. OVERLAY
26. TREE WELL
48. FIRE HYDRANT
49. POWER POLE
50. STREET LIGHTING POLE
51. SIGN AND POST
52. VALVE
53. WATER METER
54. GUY-WIRE
55. BOLLARD
56. FENCE
57. WALL
73. FULL DEPTH A.C. PATCH
74. PEDESTRIAN HAND RAIL PER SCRRA STD. ES4005
75. SAWCUT LINE & JOIN
76. PEDESTRIAN SWING GATE PER SCRRA STD. ES4002
92. SIDEWALK OUTLET STRUCTURE
146. 8" HIGH MEDIAN
147. 4" STAMP CONCRETE PAVEMENT
149. INTEGRAL CURB & GUTTER PER CITY STD. AND SCRRA STD. PLAN ES4001
150. 4' CHAIN LINK FENCE PER SCRRA STD ES5106
151. RETAINING CURB
152. RETAINING WALL

Preliminary

Rev No.	Date	Description
1	3/21	Plan added to set
2	12/21	
3	6/22	

35% DESIGN PLANS

NOT FOR CONSTRUCTION

DATE	BY	APP	REG NO	EXPIRES	SEAL HOLDER	DESCRIPTION

DESIGNED BY JD/RG
DRAWN BY JD
CHECKED BY RG
IN CHARGE WS
DATE 05/15/2020

Metro
LOS ANGELES COUNTY
METROPOLITAN TRANSPORTATION AUTHORITY

AECOM

LIN Consulting, Inc.
Traffic, Civil, and Electrical Consulting Engineers
21660 COPLEY DRIVE, SUITE 270
DIAMOND BAR, CALIFORNIA 91765
TEL:(909)396-6850 FAX:(909)396-8150

LINK UNION STATION PROJECT
NORTH MAIN STREET QUIET ZONE
TYPICAL STREET SECTION

CONTRACT NO
DRAWING NO 3.0
REV
SCALE AS SHOWN
SHEET NO 115

Drawing Name: C:\projectwise\workingdir\lcisvrad3.lci.local_lin-projectwise\lci_rgaitura\d0105416\P9575-C03-Typical Sections.dwg
Last Plotted: August 3, 2019 - 11:4AM by:RGaitura

Rev No.	Date	Description
1	3/21	Plan added to set
2	12/21	
3	6/22	

Preliminary

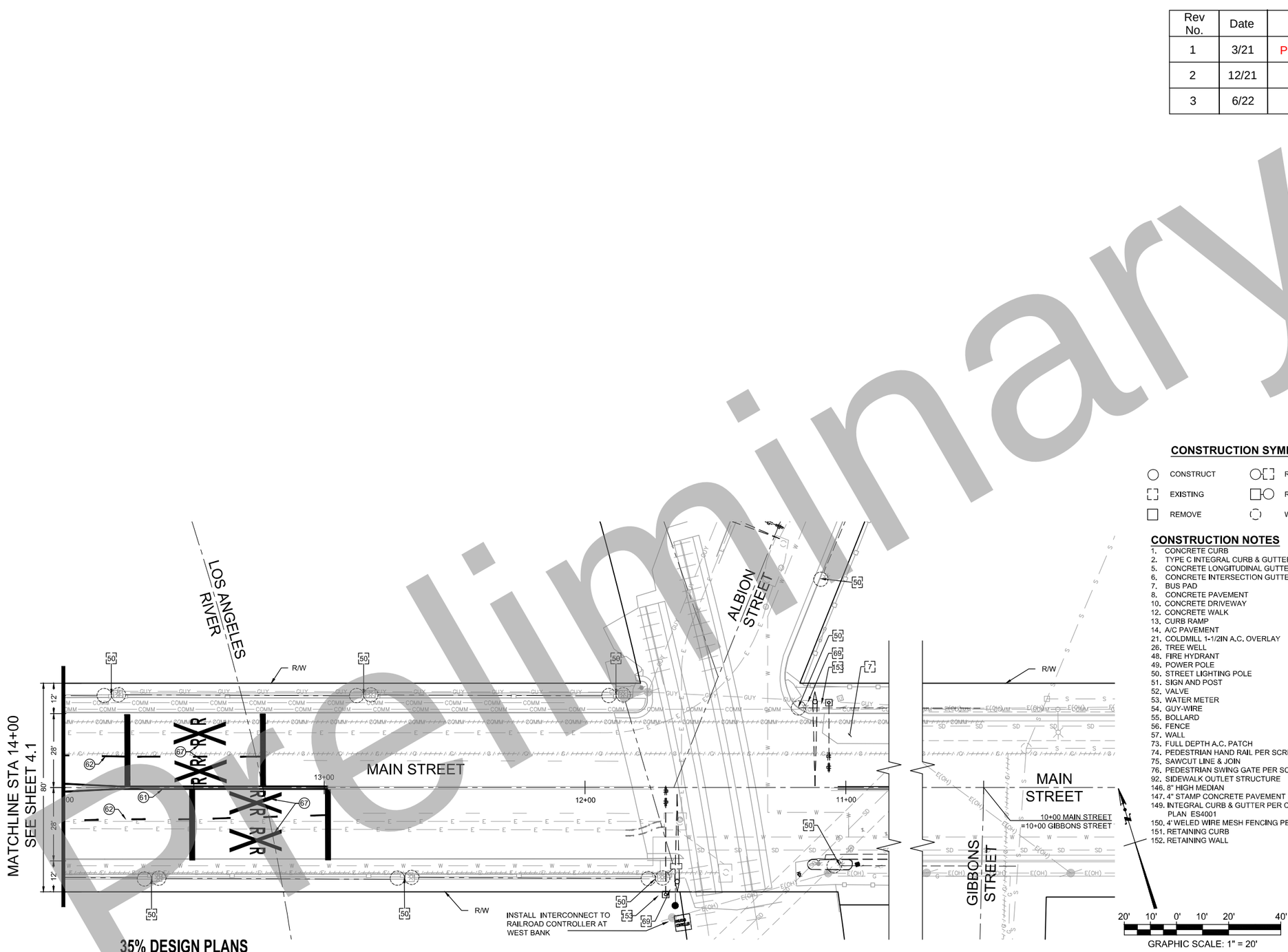

CONSTRUCTION SYMBOLS

- CONSTRUCT
- EXISTING
- REMOVE
- REMODEL EXIST.
- REMOVE & CONST.
- WORK BY OTHERS

CONSTRUCTION NOTES

1. CONCRETE CURB
2. TYPE C INTEGRAL CURB & GUTTER
5. CONCRETE LONGITUDINAL GUTTER
6. CONCRETE INTERSECTION GUTTER
7. BUS PAD
8. CONCRETE PAVEMENT
10. CONCRETE DRIVEWAY
12. CONCRETE WALK
13. CURB RAMP
14. A/C PAVEMENT
21. COLDMILL 1-1/2IN A.C. OVERLAY
26. TREE WELL
48. FIRE HYDRANT
49. POWER POLE
50. STREET LIGHTING POLE
51. SIGN AND POST
52. VALVE
53. WATER METER
54. GUY-WIRE
55. BOLLARD
56. FENCE
57. WALL
73. FULL DEPTH A.C. PATCH
74. PEDESTRIAN HAND RAIL PER SCRRA STD. ES4005
75. SAWCUT LINE & JOIN
76. PEDESTRIAN SWING GATE PER SCRRA STD. ES4002
92. SIDEWALK OUTLET STRUCTURE
146. 8" HIGH MEDIAN
147. 4" STAMP CONCRETE PAVEMENT
149. INTEGRAL CURB & GUTTER PER CITY STD. AND SCRRA STD. PLAN ES4001
150. 4' WELED WIRE MESH FENCING PER SCRRA STD ES5105
151. RETAINING CURB
152. RETAINING WALL

STRIPING

58. 4" WHITE LINE
59. 4" SOLID YELLOW LINE (THERMOPLASTIC), OFFSET 1' FROM MEDIAN PER CALTRANS DETAIL 24
60. 24" SOLID WHITE STOP LINE (THERMOPLASTIC) PER CH. 8 CAMUTCD
61. 4" DOUBLE YELLOW STRIPING PER CALTRANS DETAIL 21
62. 4"X7' WHITE LANE LINE @ 17' GAP (50' PAINT ON INTERSECTION APPROACH AND DEPARTURE) PER CALTRANS DETAIL 8
63. 4"X1' WHITE CAT TRACK @ 6' GAP
64. 12" SOLID WHITE LINE PER SCRRA STANDARD PLAN ES4012
65. 4" DOUBLE YELLOW STRIPING (CALTRANS DETAIL 21 WITH RAISED PAVEMENT MARKERS TYPE G SUPPLEMENT (TYP) AT 4' O.C. PER SCRRA STD. PLAN ES4012
66. CURB LINE DETAIL CALTRANS 27B WITH RAISED PAVEMENT MARKERS TYPE G SUPPLEMENT (TYP) AT 4' O.C. PER SCRRA STANDARD PLAN ES4012
67. PAVEMENT MARKING PER PLAN
68. RED CURB PER PLAN
77. 4" WHITE STRIPING AT 36° ON CENTER

RAIL

69. RAILROAD CROSSING GATE AND SIGNAL WITH FLASHING LIGHT UNIT
70. PEDESTRIAN CROSSING GATE WITH FLASHING LIGHT UNIT
71. RAILROAD CONTROLLER
72. NO. 8 WITH FLASHING LIGHT UNIT
148. RAILROAD TRACK
153. RAILROAD CANTILEVER WITH FLASHING LIGHT UNIT

STREET LIGHT

50. DUAL - LED STREET LIGHT

35% DESIGN PLANS

NOT FOR CONSTRUCTION

DATE	BY	APP	REG NO	EXPIRES	SEAL HOLDER	DESCRIPTION

DESIGNED BY	JD/RG
DRAWN BY	JD
CHECKED BY	RG
IN CHARGE	WS
DATE	05/15/2020

Metro
LOS ANGELES COUNTY
METROPOLITAN TRANSPORTATION AUTHORITY

AECOM

LIN Consulting, Inc.
Traffic, Civil, and Electrical Consulting Engineers
21660 COPLEY DRIVE, SUITE 270
DIAMOND BAR, CALIFORNIA 91765
TEL: (909)396-6850 FAX: (909)396-8150

LINK UNION STATION PROJECT
NORTH MAIN STREET QUIET ZONE
STREET IMPROVEMENT PLAN

CONTRACT NO	
DRAWING NO	4.0
REV	
SCALE	AS SHOWN
SHEET NO	116

Drawing Name: C:\projectwise\workingdir\tcisvrad3.lci.local_lin-projectwiseltci_rgatura\d0105416\P9575-C02-SIP.dwg
Last Plotted : August 4, 2019 - 12:35PM by:RGatura

Rev No.	Date	Description
1	3/21	Plan added to set
2	12/21	
3	6/22	

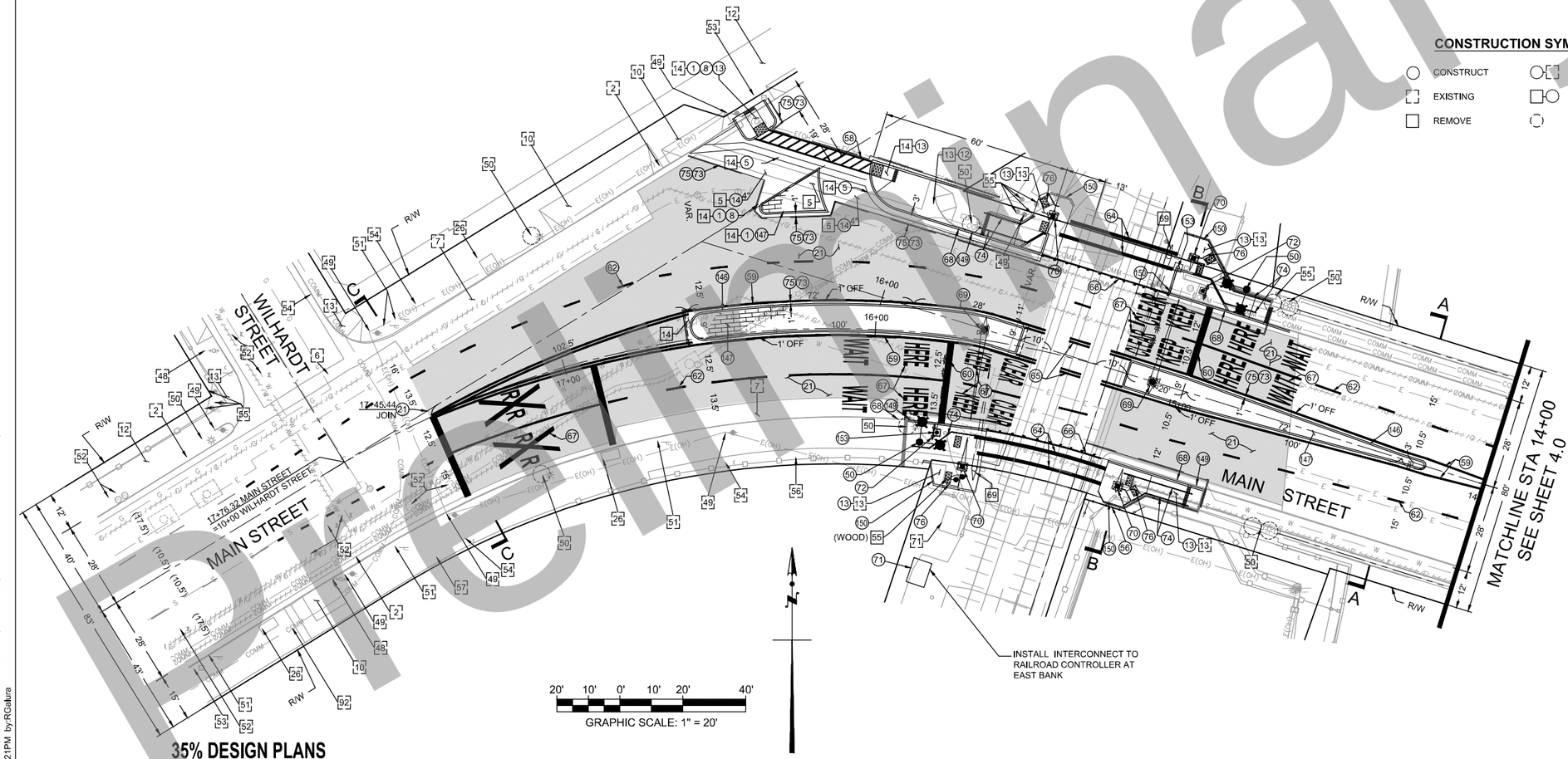

35% DESIGN PLANS

CONSTRUCTION SYMBOLS

- CONSTRUCT
- EXISTING
- REMOVE
- REMODEL EXIST.
- REMOVE & CONST.
- WORK BY OTHERS

CONSTRUCTION NOTES

1. CONCRETE CURB
2. TYPE C INTEGRAL CURB & GUTTER
5. CONCRETE LONGITUDINAL GUTTER
6. CONCRETE INTERSECTION GUTTER
7. BUS PAD
8. CONCRETE PAVEMENT
10. CONCRETE DRIVEWAY
12. CONCRETE WALK
13. CURB RAMP
14. A/C PAVEMENT
21. COLDMILL 1-1/2IN A.C. OVERLAY
26. TREE WELL
48. FIRE HYDRANT
49. POWER POLE
50. STREET LIGHTING POLE
51. SIGN AND POST
52. VALVE
53. WATER METER
54. GUY-WIRE
55. BOLLARD
56. FENCE
57. WALL
73. FULL DEPTH A.C. PATCH
74. PEDESTRIAN HAND RAIL PER SCRRA STD. ES4005
75. SAWCUT LINE & JOIN
76. PEDESTRIAN SWING GATE PER SCRRA STD. ES4002
92. SIDEWALK OUTLET STRUCTURE
146. 8" HIGH MEDIAN
147. 4" STAMP CONCRETE PAVEMENT
149. INTEGRAL CURB & GUTTER PER CITY STD. AND SCRRA STD. PLAN ES4001
150. 4' WELED WIRE MESH FENCING PER SCRRA STD ES5105
151. RETAINING CURB
152. RETAINING WALL

STRIPING

58. 4" WHITE LINE
59. 4" SOLID YELLOW LINE (THERMOPLASTIC), OFFSET 1' FROM MEDIAN PER CALTRANS DETAIL 24
60. 24" SOLID WHITE STOP LINE (THERMOPLASTIC) PER CH. 8 CAMUTCD
61. 4" DOUBLE YELLOW STRIPING PER CALTRANS DETAIL 21
62. 4"X7' WHITE LANE LINE @ 17' GAP (50' PAINT ON INTERSECTION APPROACH AND DEPARTURE) PER CALTRANS DETAIL 8
63. 4"X1' WHITE CAT TRACK @ 6' GAP
64. 12" SOLID WHITE LINE PER SCRRA STANDARD PLAN ES4012
65. 4" DOUBLE YELLOW STRIPING (CALTRANS DETAIL 21 WITH RAISED PAVEMENT MARKERS TYPE G SUPPLEMENT (TYP) AT 4' O.C. PER SCRRA STD. PLAN ES4012
66. CURB LINE DETAIL CALTRANS 27B WITH RAISED PAVEMENT MARKERS TYPE G SUPPLEMENT (TYP) AT 4' O.C. PER SCRRA STANDARD PLAN ES4012
67. PAVEMENT MARKING PER PLAN
68. RED CURB PER PLAN
77. 4" WHITE STRIPING AT 36" ON CENTER

RAIL

69. RAILROAD CROSSING GATE AND SIGNAL WITH FLASHING LIGHT UNIT
70. PEDESTRIAN CROSSING GATE WITH FLASHING LIGHT UNIT
71. RAILROAD CONTROLLER
72. NO. 8 WITH FLASHING LIGHT UNIT
148. RAILROAD TRACK
153. RAILROAD CANTILEVER WITH FLASHING LIGHT UNIT

STREET LIGHT

50. DUAL - LED STREET LIGHT

Preliminary

NOT FOR CONSTRUCTION

DATE	BY	APP	REG NO	EXPIRES	SEAL HOLDER	DESCRIPTION

DESIGNED BY JD/RG
DRAWN BY JD
CHECKED BY RG
IN CHARGE WS
DATE 05/15/2020

Metro
LOS ANGELES COUNTY
METROPOLITAN TRANSPORTATION AUTHORITY

AECOM

LIN Consulting, Inc.
Traffic, Civil, and Electrical Consulting Engineers
21660 COPLEY DRIVE, SUITE 270
DIAMOND BAR, CALIFORNIA 91765
TEL:(909)396-6850 FAX:(909)396-8150

LINK UNION STATION PROJECT
NORTH MAIN STREET QUIET ZONE
STREET IMPROVEMENT PLAN

CONTRACT NO
DRAWING NO 41
REV
SCALE AS SHOWN
SHEET NO 117

Drawing Name: C:\projectwise\workingdir\lcisvrad3.lci.local_lin-projectwise\lci_rgalura\d0105416\P9575-C02-SIP.dwg
Last Plotted : August 4, 2019 - 7:21PM by:RGalura

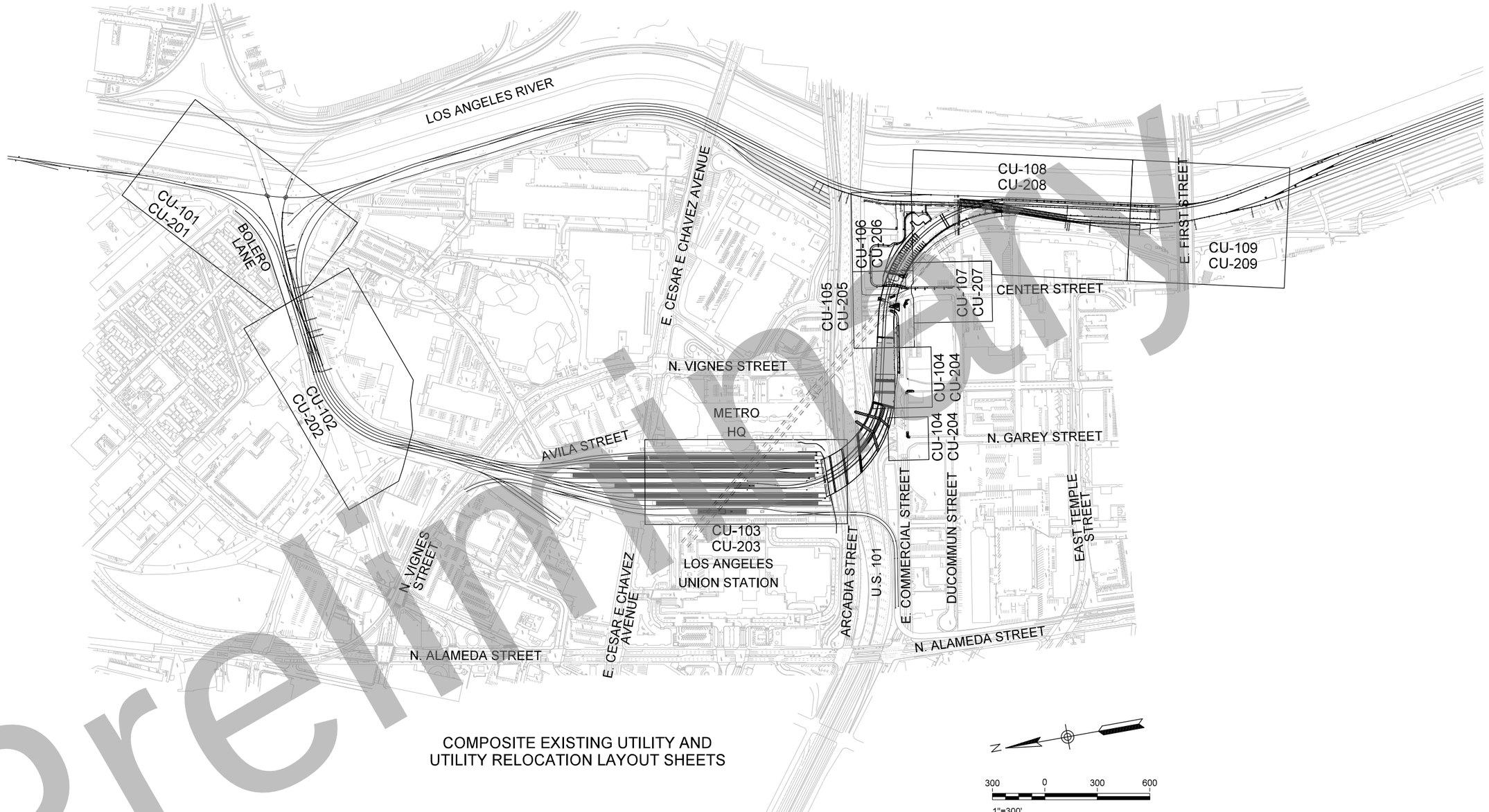

COMPOSITE EXISTING UTILITY AND
UTILITY RELOCATION LAYOUT SHEETS

Preliminary

35% DESIGN PLANS
NOT FOR CONSTRUCTION

Original plan submittal made in Aug. 2019

THE PREPARATION OF THIS DRAWING HAS BEEN FINANCED IN PART THROUGH A GRANT FROM THE U.S. DEPARTMENT OF TRANSPORTATION, FEDERAL TRANSIT ADMINISTRATION (FTA), UNDER THE FEDERAL TRANSIT ACT OF 1964, AS AMENDED, AND IN PART BY THE TAXES OF THE CITIZENS OF LOS ANGELES COUNTY AND OF THE STATE OF CALIFORNIA.

Rev No.	Date	Description
1	3/21	
2	12/21	
3	6/22	Updated to reflect modified Amay's access road design; scale changed

DESIGNED BY M.AGUILAR
DRAWN BY M.AGUILAR
CHECKED BY I.ALTARES
IN CHARGE T.KIM
DATE 6/01/2022

REGISTERED PROFESSIONAL ENGINEER
No. Exp.
CIVIL
STATE OF CALIFORNIA

Metro
LOS ANGELES COUNTY
METROPOLITAN TRANSPORTATION AUTHORITY

BA INC
TRUE ENGINEERING EXCELLENCE

HDR ENGINEERING
350 S. GRAND AVENUE
SUITE 2900
LOS ANGELES, CA 90071
(213) 239-5800

SUBMITTED: _____ PROJECT MANAGER
APPROVED: _____

LINK UNION STATION PROJECT
UTILITIES
KEY MAP

CONTRACT NO
DRAWING NO CU-100
REV
SCALE 1"=300'
SHEET NO 118

Plot Driver=$PLTDRV$$ Pentable=PlotStamp.tbl USER = maguilar 8:07:12 AM 5/26/2022 $FILE$

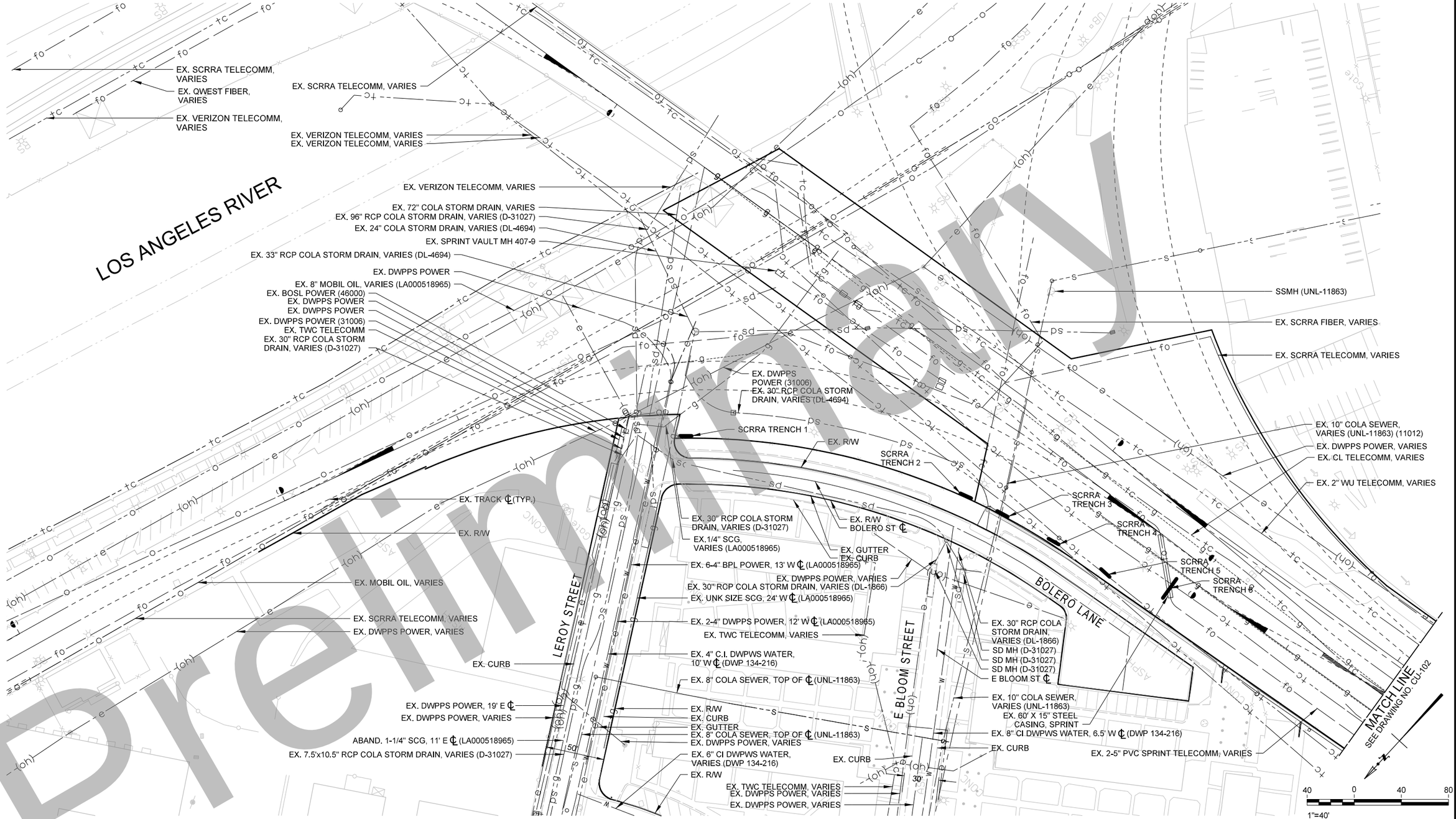

Preliminary

35% DESIGN PLANS
NOT FOR CONSTRUCTION

Original plan submittal made in Aug. 2019

THE PREPARATION OF THIS DRAWING HAS BEEN FINANCED IN PART THROUGH A GRANT FROM THE U.S. DEPARTMENT OF TRANSPORTATION, FEDERAL TRANSIT ADMINISTRATION (FTA), UNDER THE FEDERAL TRANSIT ACT OF 1964, AS AMENDED, AND IN PART BY THE TAXES OF THE CITIZENS OF LOS ANGELES COUNTY AND OF THE STATE OF CALIFORNIA.

Rev No.	Date	Description
1	3/21	Pothole/trench locations added
2	12/21	
3	6/22	

DESIGNED BY M.AGUILAR
DRAWN BY M.AGUILAR
CHECKED BY I.ALTARES
IN CHARGE T.KIM
DATE 3/05/2021

REGISTERED PROFESSIONAL ENGINEER — No. — EXP. — CIVIL — STATE OF CALIFORNIA

Metro
LOS ANGELES COUNTY
METROPOLITAN TRANSPORTATION AUTHORITY

BA INC — TRUE ENGINEERING EXCELLENCE

HDR ENGINEERING
350 S. GRAND AVENUE
SUITE 2500
LOS ANGELES, CA 90071
(213) 239-5800

SUBMITTED: _____ PROJECT MANAGER
APPROVED: _____

LINK UNION STATION PROJECT
UTILITIES
COMPOSITE UTILITY PLANS
SHEET 1 OF 9

CONTRACT NO
DRAWING NO CU-101
REV
SCALE 1"=40'
SHEET NO 119

Plot Driver=$PLTDRV$ Pentable=PlotStamp.tbl USER = maguilar 3:19:18 PM 2/24/2022 $FILE$

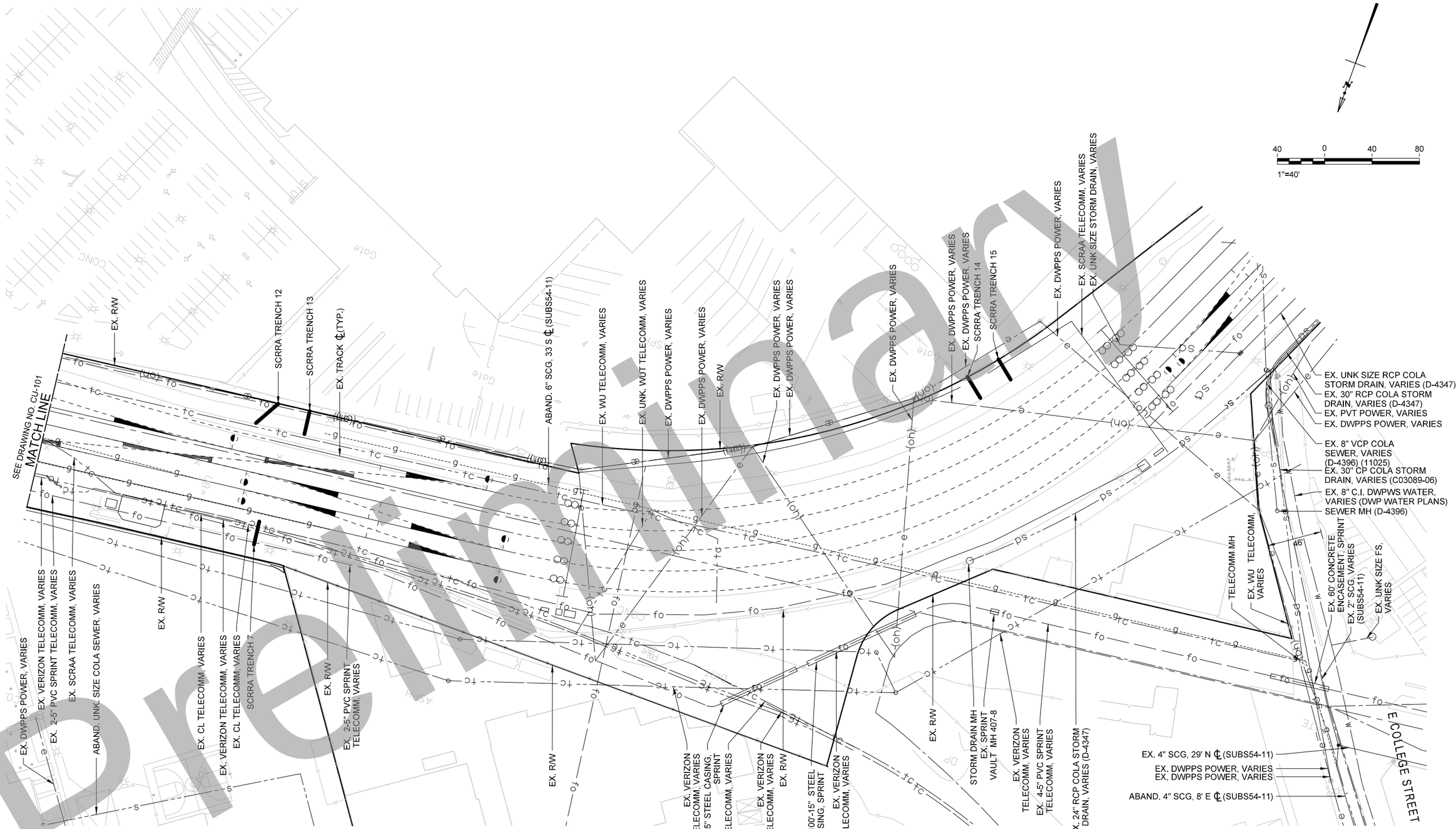

Preliminary

35% DESIGN PLANS
NOT FOR CONSTRUCTION

Original plan submittal made in Aug. 2019

THE PREPARATION OF THIS DRAWING HAS BEEN FINANCED IN PART THROUGH A GRANT FROM THE U.S. DEPARTMENT OF TRANSPORTATION, FEDERAL TRANSIT ADMINISTRATION (FTA), UNDER THE FEDERAL TRANSIT ACT OF 1964, AS AMENDED, AND IN PART BY THE TAXES OF THE CITIZENS OF LOS ANGELES COUNTY AND OF THE STATE OF CALIFORNIA.

Rev No.	Date	Description
1	3/21	Pothole/trench locations added
2	12/21	
3	6/22	

DESIGNED BY M.AGUILAR
DRAWN BY M.AGUILAR
CHECKED BY I.ALTARES
IN CHARGE T.KIM
DATE 3/05/2021

REGISTERED PROFESSIONAL ENGINEER — No. — Exp. — CIVIL — STATE OF CALIFORNIA

Metro
LOS ANGELES COUNTY
METROPOLITAN TRANSPORTATION AUTHORITY

BA INC (1656 ORANGE AVENUE) TRUE ENGINEERING EXCELLENCE (714) 558-8900 FAX (714) 558-8901 (TEMPORARY OFFICE - EFFECTIVE 10/18/21)

HDR ENGINEERING 350 S. GRAND AVENUE SUITE 1700 LOS ANGELES, CA 90071 (213) 236-5800

SUBMITTED: _____ PROJECT MANAGER

APPROVED: _____

LINK UNION STATION PROJECT
UTILITIES
COMPOSITE UTILITY PLANS
SHEET 2 OF 9

CONTRACT NO
DRAWING NO CU-102
REV
SCALE 1"=40'
SHEET NO 120

Plot Driver=$PLTDRV$ Pentable=PlotStamp.tbl USER = maguilar 3:20:45 PM 2/24/2022 $FILE$

GENERAL NOTES:

1. SEE DRAWING CU-001 FOR NOTES & CU-100 FOR KEY MAP.
2. FOR EXISTING UTILITIES OFFSITE, SEE OFFSITE UTILITIES.
3. ABANDONED UTILITIES ARE SHOWN AS SCREENED LINES.
4. SEE CALTRANS PLANS FOR UTILITIES WITHIN THE US-101 R/W.

LEGEND

(####) UTILITY ID. SEE GENERAL NOTE 1 HEREON.

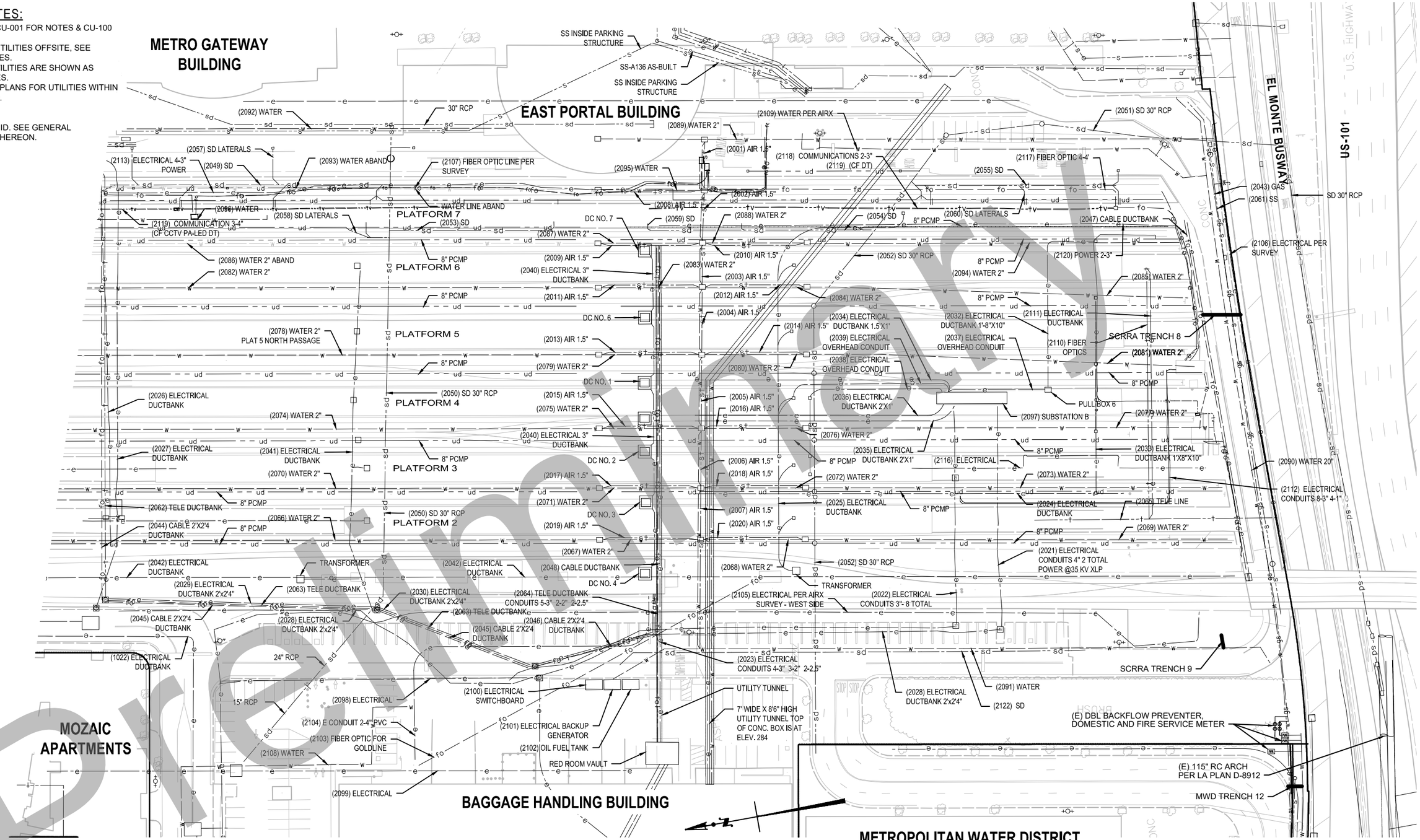

Preliminary

35% DESIGN SUBMITTAL
NOT FOR CONSTRUCTION

Original plan submittal made in Aug. 2019

Rev No.	Date	Description
1	3/21	Pothole/trench locations added
2	12/21	
3	6/22	

DESIGNED BY M.AGUILAR
DRAWN BY M.AGUILAR
CHECKED BY I.ALTARES
IN CHARGE T.KIM
DATE 3/05/2021

THE PREPARATION OF THIS DRAWING HAS BEEN FINANCED IN PART THROUGH A GRANT FROM THE U.S. DEPARTMENT OF TRANSPORTATION, FEDERAL TRANSIT ADMINISTRATION (FTA), UNDER THE FEDERAL TRANSIT ACT OF 1964, AS AMENDED, AND IN PART BY THE TAXES OF THE CITIZENS OF LOS ANGELES COUNTY AND OF THE STATE OF CALIFORNIA.

LOS ANGELES COUNTY
METROPOLITAN TRANSPORTATION AUTHORITY

BA INC TRUE ENGINEERING EXCELLENCE

HDR ENGINEERING
350 S. GRAND AVENUE SUITE 2900 LOS ANGELES, CA 90071 (213) 239-5800

SUBMITTED: _____ PROJECT MANAGER

APPROVED: _____

LINK UNION STATION PROJECT

COMPOSITE UTILITY PLANS SHEET 3 OF 9

CONTRACT NO

DRAWING NO CU-103 REV --

SCALE 1" = 40'

SHEET NO 121

2/15/2022 3:54:33 PM USER = MAGUILAR
C:\PWWORKING\SAC\D1004986\LUS-CU-10# STATION EXISTING UTILITY PLAN.DWG

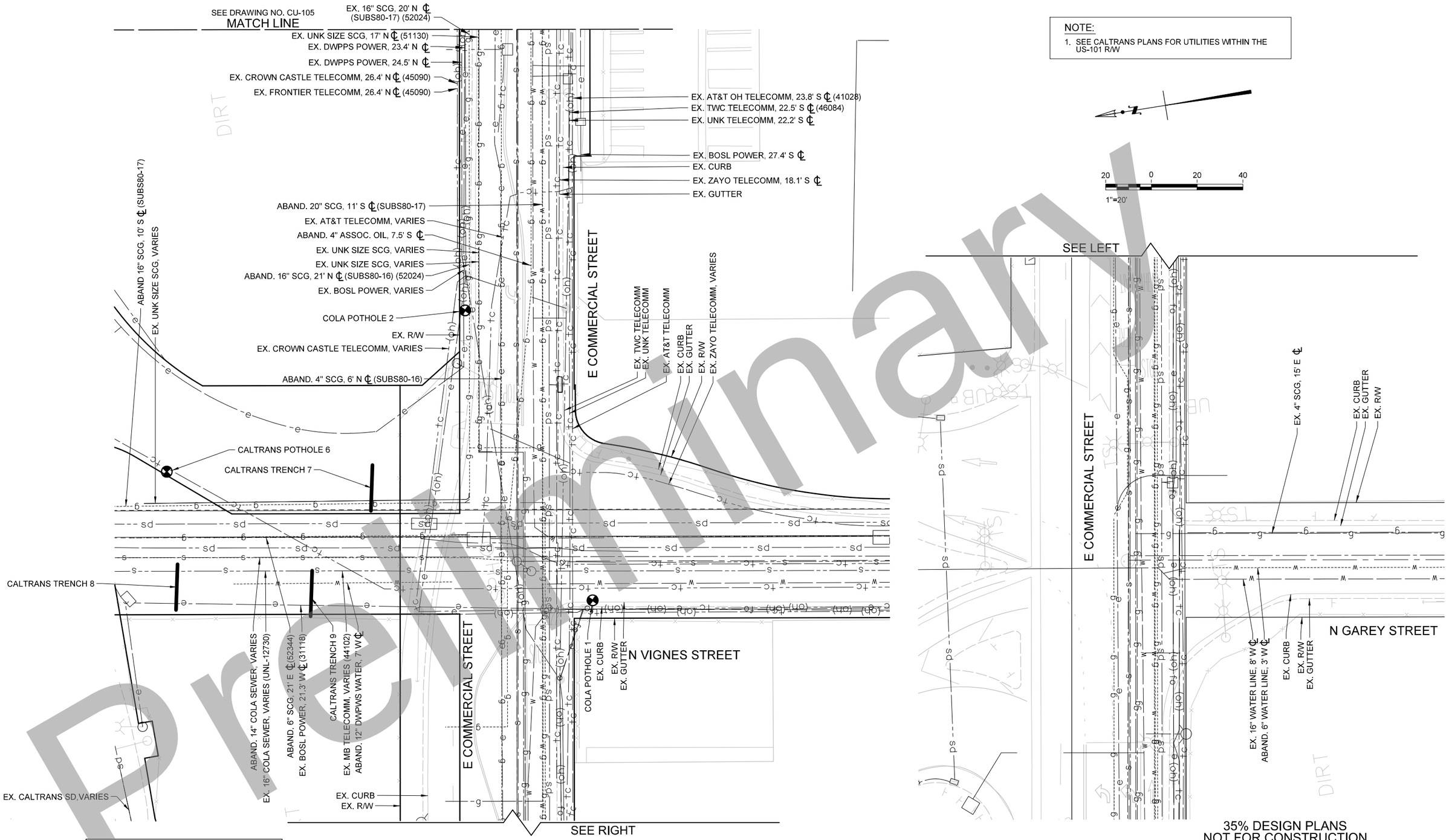

NOTE:

1. SEE CALTRANS PLANS FOR UTILITIES WITHIN THE US-101 R/W

20 0 20 40

1"=20'

35% DESIGN PLANS
NOT FOR CONSTRUCTION

Preliminary

Original plan submittal made in Aug. 2019

THE PREPARATION OF THIS DRAWING HAS BEEN FINANCED IN PART THROUGH A GRANT FROM THE U.S. DEPARTMENT OF TRANSPORTATION, FEDERAL TRANSIT ADMINISTRATION (FTA), UNDER THE FEDERAL TRANSIT ACT OF 1964, AS AMENDED, AND IN PART BY THE TAXES OF THE CITIZENS OF LOS ANGELES COUNTY AND OF THE STATE OF CALIFORNIA.

Rev No.	Date	Description
1	3/21	Pothole/trench locations added, extended limits along Commercial St.
2	12/21	
3	6/22	

DESIGNED BY M.AGUILAR
DRAWN BY M.AGUILAR
CHECKED BY I.ALTARES
IN CHARGE T.KIM
DATE 3/05/2021

REGISTERED PROFESSIONAL ENGINEER No. Exp. CIVIL STATE OF CALIFORNIA

Metro
LOS ANGELES COUNTY
METROPOLITAN TRANSPORTATION AUTHORITY

BA INC TRUE ENGINEERING EXCELLENCE

HDR ENGINEERING
350 S. GRAND AVENUE SUITE 2500 LOS ANGELES, CA 90071 (213) 2354500

SUBMITTED: _____ PROJECT MANAGER

APPROVED: _____

LINK UNION STATION PROJECT
UTILITIES
COMPOSITE UTILITY PLANS
SHEET 4 OF 9

CONTRACT NO
DRAWING NO CU-104
REV
SCALE 1"=20'
SHEET NO 122

Plot Driver=$PLTDRV$$ Pentable=PlotStamp.tbl USER = magular 5:38:49 PM 2/24/2022 $FILE$

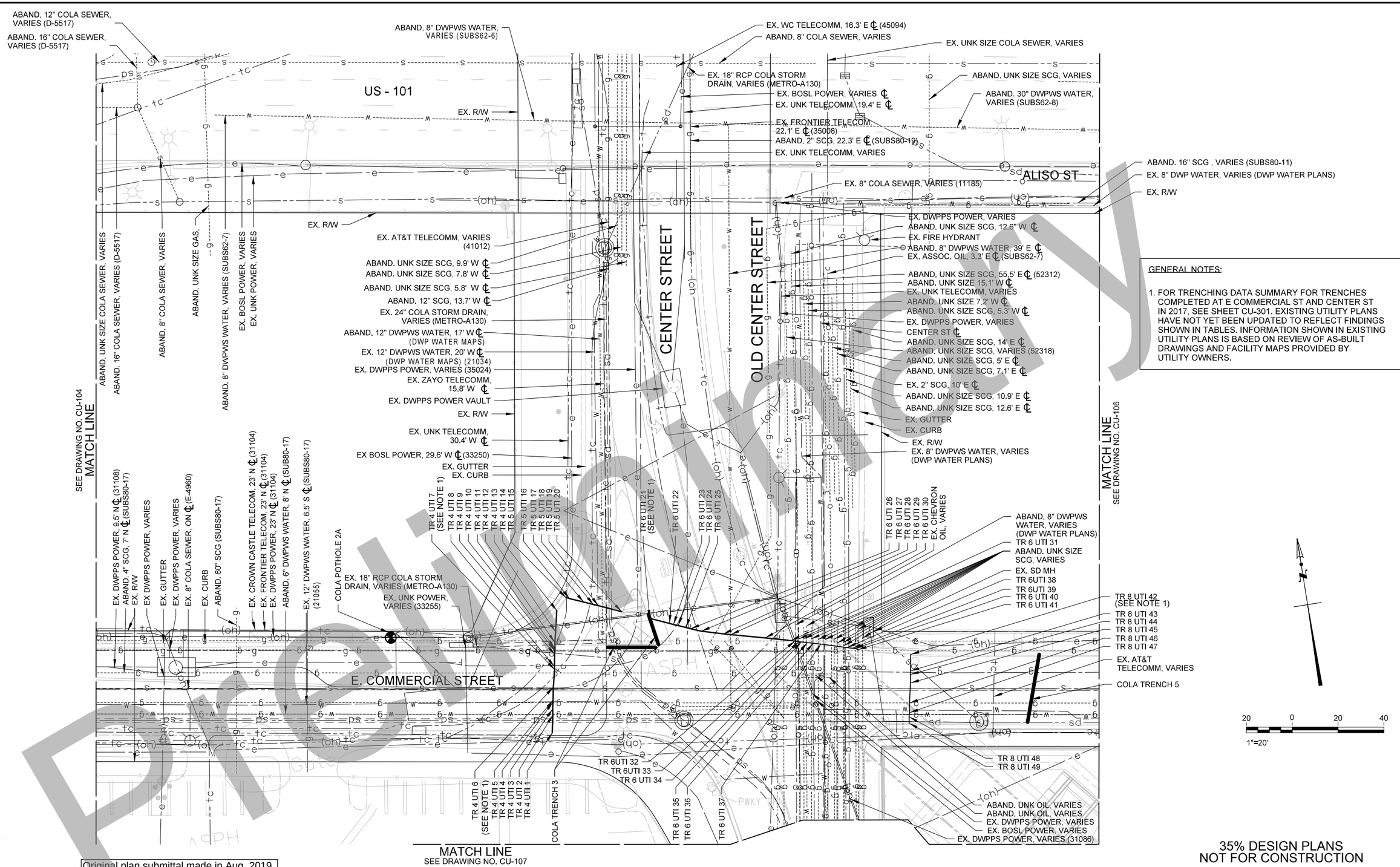

GENERAL NOTES:

1. FOR TRENCHING DATA SUMMARY FOR TRENCHES COMPLETED AT E COMMERCIAL ST AND CENTER ST IN 2017, SEE SHEET CU-301. EXISTING UTILITY PLANS HAVE NOT YET BEEN UPDATED TO REFLECT FINDINGS SHOWN IN TABLES. INFORMATION SHOWN IN EXISTING UTILITY PLANS IS BASED ON REVIEW OF AS-BUILT DRAWINGS AND FACILITY MAPS PROVIDED BY UTILITY OWNERS.

Preliminary

35% DESIGN PLANS
NOT FOR CONSTRUCTION

Original plan submittal made in Aug. 2019

Rev No.	Date	Description
1	3/21	Pothole/trench locations added
2	12/21	
3	6/22	

THE PREPARATION OF THIS DRAWING HAS BEEN FINANCED IN PART THROUGH A GRANT FROM THE U.S. DEPARTMENT OF TRANSPORTATION, FEDERAL TRANSIT ADMINISTRATION (FTA), UNDER THE FEDERAL TRANSIT ACT OF 1964, AS AMENDED, AND IN PART BY THE TAXES OF THE CITIZENS OF LOS ANGELES COUNTY AND OF THE STATE OF CALIFORNIA.

DESIGNED BY M.AGUILAR
DRAWN BY M.AGUILAR
CHECKED BY I.ALTARES
IN CHARGE T.KIM
DATE 3/05/2021

REGISTERED PROFESSIONAL ENGINEER — No. Exp. CIVIL — STATE OF CALIFORNIA

Metro
LOS ANGELES COUNTY
METROPOLITAN TRANSPORTATION AUTHORITY

BA INC (1958-2006) MBE — TRUE ENGINEERING EXCELLENCE — 1000 WILSHIRE BLVD., SUITE 1500, LOS ANGELES, CA 90017, TELEPHONE (213) 312-2000, FAX (213) 312-2001

HDR ENGINEERING
350 S. GRAND AVENUE
SUITE 2600
LOS ANGELES, CA 90071
(213) 236-5800

SUBMITTED: _____ PROJECT MANAGER

APPROVED: _____

LINK UNION STATION PROJECT
UTILITIES
COMPOSITE UTILITY PLANS
SHEET 5 OF 9

CONTRACT NO
DRAWING NO CU-105 REV
SCALE 1"=20'
SHEET NO 123

Plot Driver=$PLTDRV$$ Pentable=PlotStamp.tbl USER = maguilar 5:29:15 PM 2/24/2022 $FILE$

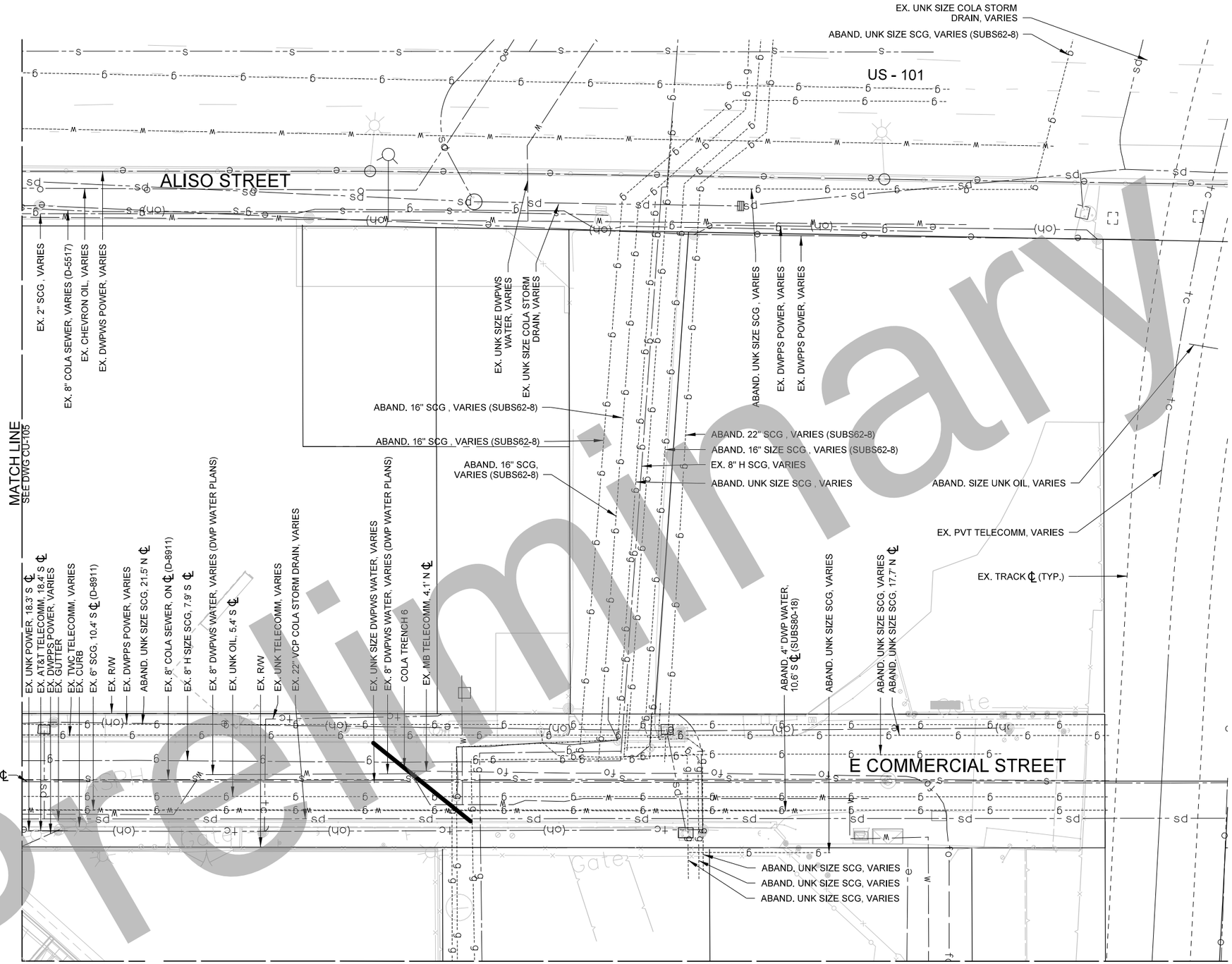

35% DESIGN PLANS
NOT FOR CONSTRUCTION

Original plan submittal made in Aug. 2019

THE PREPARATION OF THIS DRAWING HAS BEEN FINANCED IN PART THROUGH A GRANT FROM THE U.S. DEPARTMENT OF TRANSPORTATION, FEDERAL TRANSIT ADMINISTRATION (FTA), UNDER THE FEDERAL TRANSIT ACT OF 1964, AS AMENDED, AND IN PART BY THE TAXES OF THE CITIZENS OF LOS ANGELES COUNTY AND OF THE STATE OF CALIFORNIA.

Rev No.	Date	Description
1	3/21	Pothole/trench locations added
2	12/21	
3	6/22	

DESIGNED BY M.AGUILAR
DRAWN BY M.AGUILAR
CHECKED BY I.ALTARES
IN CHARGE T.KIM
DATE 3/05/2021

REGISTERED PROFESSIONAL ENGINEER — No. — Exp. — CIVIL — STATE OF CALIFORNIA

Metro
LOS ANGELES COUNTY
METROPOLITAN TRANSPORTATION AUTHORITY

BA INC — TRUE ENGINEERING EXCELLENCE
HDR ENGINEERING
350 S. GRAND AVENUE SUITE 2500 LOS ANGELES, CA 90071 (213) 234-5800

SUBMITTED: _____ PROJECT MANAGER
APPROVED: _____

LINK UNION STATION PROJECT
UTILITIES
COMPOSITE UTILITY PLANS
SHEET 6 OF 9

CONTRACT NO
DRAWING NO CU-106 REV
SCALE 1"=20'
SHEET NO 124

Preliminary

Plot Driver=$PLTDRVS$ Pentable=PlotStamp.tbl USER = maguilar 4:45:21 PM 2/24/2022 $FILE$

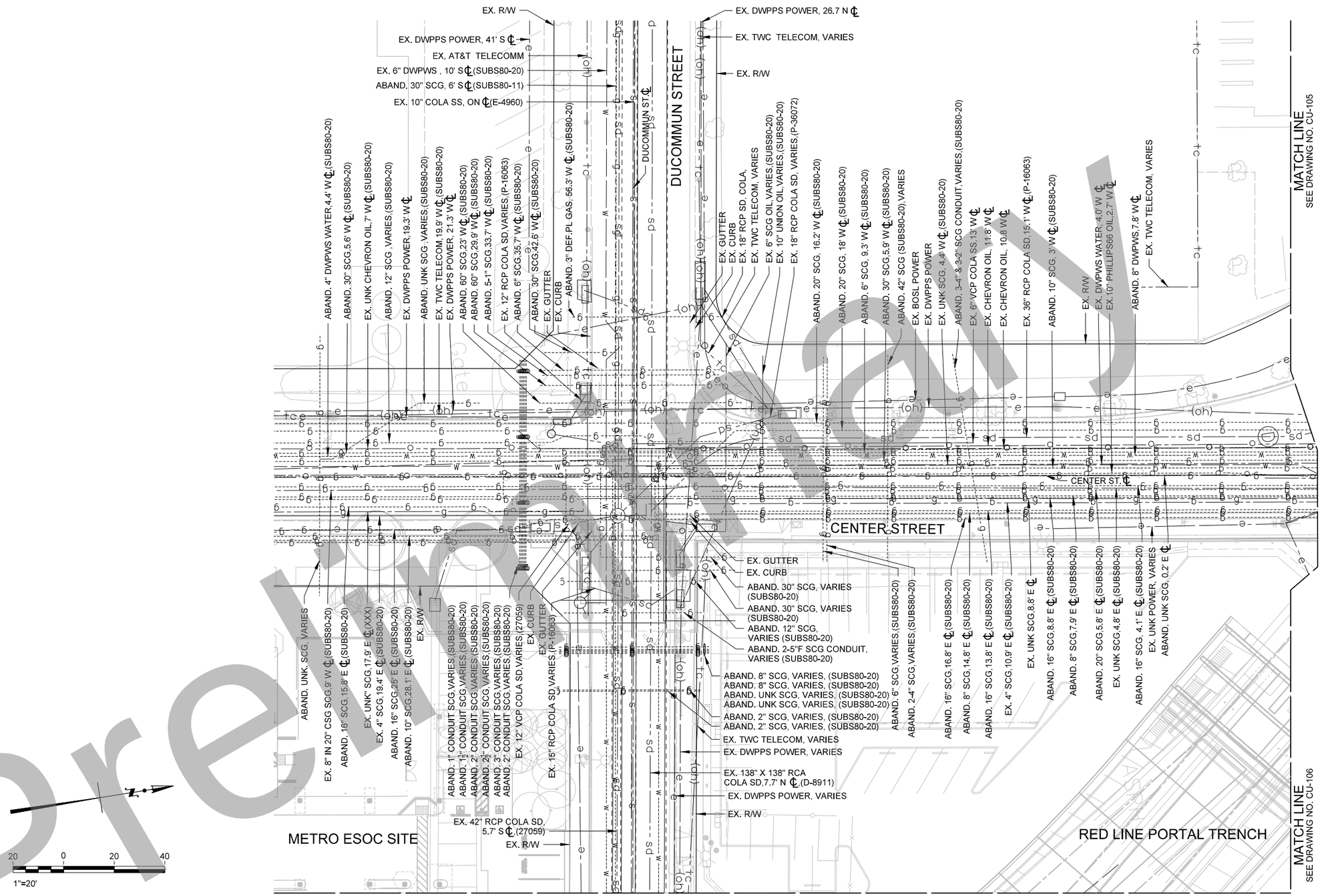

Original plan submittal made in Aug. 2019

Rev No.	Date	Description
1	3/21	Pothole/trench locations added
2	12/21	
3	6/22	

THE PREPARATION OF THIS DRAWING HAS BEEN FINANCED IN PART THROUGH A GRANT FROM THE U.S. DEPARTMENT OF TRANSPORTATION, FEDERAL TRANSIT ADMINISTRATION (FTA), UNDER THE FEDERAL TRANSIT ACT OF 1964, AS AMENDED, AND IN PART BY THE TAXES OF THE CITIZENS OF LOS ANGELES COUNTY AND OF THE STATE OF CALIFORNIA.

DESIGNED BY M.AGUILAR
DRAWN BY M.AGUILAR
CHECKED BY I.ALTARES
IN CHARGE T.KIM
DATE 3/05/2021

REGISTERED PROFESSIONAL ENGINEER — No. — Exp. — CIVIL — STATE OF CALIFORNIA

Metro
LOS ANGELES COUNTY
METROPOLITAN TRANSPORTATION AUTHORITY

BA INC — TRUE ENGINEERING EXCELLENCE

HDR ENGINEERING
350 S. GRAND AVENUE
SUITE 2500
LOS ANGELES, CA 90071
(213) 239-5800

SUBMITTED: _____ PROJECT MANAGER

APPROVED: _____

LINK UNION STATION PROJECT
UTILITIES
COMPOSITE UTILITY PLANS
SHEET 7 OF 9

CONTRACT NO
DRAWING NO CU-107 REV
SCALE 1"=20'
SHEET NO 125

35% DESIGN PLANS
NOT FOR CONSTRUCTION

Preliminary

Plot Driver=$PLTDRVS$ Pentable=PlotStamp.tbl USER = maguilar 4:51:09 PM 2/24/2022 $FILE$

NOTE:

1. PLANS DO NOT REFLECT THE FUTURE CONDITION OF THE METRO DIVISION 20 SITE

LOS ANGELES RIVER

EX. R/W
ABAND. 16" SCG,VARIES
EX. MB TELECOMM, VARIES
EX. 8" PVT FP, VARIES
EX. LIGHTING DUCT METRO, VARIES,(L-S-73)
ABAND. EXXON OIL, VARIES
METRO DIV 20 POTHOLE 1
METRO DIV 20 TRENCH 2
EX. 138" X 138" RCA COLA STORM DRAIN,7.7' N ℄ (D-8911)
EX. 42" RCP COLA STORM DRAIN,9.5' S ℄ (27059)
FUTURE 8" PVC FW PER METRO DIV 20 PROJECT
EX. PVT STORM DRAIN OUTFALL
ABAND. UNK, LADWP, VARIES
EX. UNK SCG,13.7' S ℄ (XXX)
EX. VERIZON TELECOMM, VARIES
BNSF TRENCH 1
EX. 21" RCP COLA, VARIES,(METRO A130)
EX. VERIZON TELECOMM, VARIES
EX. 15" RCP SD COLA, VARIES,(METRO A130)
EX. 18" RCP COLA STORM DRAIN, VARIES,(METRO A130)
FUTURE EXISTING 18" RCP STORM DRAIN PER METRO DIV 20 PROJECT
FUTURE EXISTING 18" RCP STORM DRAIN PER METRO DIV 20 PROJECT
FUTURE TPS DUCTBANK PER METRO DIV 20 PROJECT
FUTURE C/P DUCTBANK PER METRO DIV 20 PROJECT
FUTURE 8" PVC FW PER METRO DIV 20 PROJECT
FUTURE DUCT BANK PER METRO DIV 20 PROJECT
METRO DIV 20 TRENCH 5
EX. PVT 6" FP, VARIES
EX. PVT 6" FP, VARIES
EX. MB TELECOMM, VARIES
BNSF TRENCH 2
EX. AMTRACK ℄
EX. MAIN TRACK ℄
METRO DIV 20 MH-1
ABAND. 8" PVT WATER
METRO DIV 20 TRENCH 7
EX. DWPPS POWER
EX. VERIZON TELECOMM
BNSF TRENCH 3
ABAND. EXXON MOBIL OIL
EX. 12" SCG
BNSF POTHOLE 5
BNSF POTHOLE 4A
BNSF POTHOLE 4B
EX. ZAYO TELECOMM
BNSF POTHOLE 6
BNSF POTHOLE 7
DIV 20 BOUNDARY SEE NOTE 1
EX. TRACK ℄(TYP)
BNSF POTHOLE 8
EX. LEVEL 3 TELECOMM
EX. QWEST TELECOMM
EX. ZAYO TELECOMM

METRO DIV 20 TRENCH 4
METRO DIV 20 POTHOLE 3-3
METRO DIV 20 POTHOLE 3-2
METRO DIV 20 POTHOLE 3-1
ABAND. UNK SCG, VARIES
DIV 20 BOUNDARY SEE NOTE 1
EX. DWPPS POWER, 16.8' N ℄
ABAND. COLA 8" VCP SS, 0.6' S ℄ (FB590-55)
ABAND. UNK SCG, 16.7' N ℄
EX. 20" SCG,VARIES (1.54)
SEE DRAWING NO. CU-106 MATCH LINE

EX. R/W
EX. BOSL POWER
EX. CURB
ABAND. 4" DWPWS WATER
ABAND. UNK SIZE DWP WATER
EX. 42" COLA STORM DRAIN
EX. 8" COLA STORM DRAIN
DUCOMMUN ST ℄
DUCOMMUN STREET
MATCH LINE
SEE DRAWING NO. CU-107

ABAND. 20" SCG
285' E ℄ (SUBS80-13)
ABAND. 16" SCG
292.8' E ℄ (SUBS80-13)
EX. UNK SIZE SCG
ABAND. UNK SIZE SCG
ABAND. UNK SIZE SCG
ABAND. UNK SIZE SCG
EX. MB TELECOMM, VARIES
ABAND. 16" SCG
ABAND. 16" SCG
ABAND. 16" UNK OIL
ABAND. 24" SCG
EX. BOSL POWER
ABAND. 16" SCG
ABAND. SIZE SCG
JACKSON STREET

EX. 20" SCG
EX. MB TELECOMM
EX. MB TELECOMM
EX. METRO POWER
EX. MB TELECOMM
EX. VERIZON TELECOMM
EX. UNK SIZE SCG
EX. R/W
EX. 8" PVT WATER
ABAND. 20" SCG
EX. 8" COLA SEWER
JACKSON ST ℄
EX. DWPPS POWER
EX. UNK SIZE SCG
ABAND. UNK SIZE SCG
EX. UNK SIZE SCG
EX. 4" DWPWS WATER
EX. 30" SCG
EX. CURB
EX. TWC TELECOMM
ABAND. UNK SIZE SCG
ABAND. 3" SIZE SCG
ABAND. UNK SIZE DWPWS WATER
ABAND. 4" SCG
E TEMPLE STREET
ABAND. 4" SHELL OIL
EX. 8" SCG
EX. 20" SCG
EX. DWPPS POWER
ABAND. 6" PVT WATER
EX. 3" AMOL. OIL
EX. TWC TELECOMM
ABAND. 8" COLA SEWER
EX. 18" STORM DRAIN
BNSF POTHOLE 9
MATCH LINE
SEE DRAWING NO. CU-109

METRO DIVISION 20 SITE

40 0 40 80
1"=40'

35% DESIGN PLANS
NOT FOR CONSTRUCTION

Original plan submittal made in Aug. 2019

Preliminary

THE PREPARATION OF THIS DRAWING HAS BEEN FINANCED IN PART THROUGH A GRANT FROM THE U.S. DEPARTMENT OF TRANSPORTATION, FEDERAL TRANSIT ADMINISTRATION (FTA), UNDER THE FEDERAL TRANSIT ACT OF 1964, AS AMENDED, AND IN PART BY THE TAXES OF THE CITIZENS OF LOS ANGELES COUNTY AND OF THE STATE OF CALIFORNIA.

Rev No.	Date	Description
1	3/21	Pothole/trench locations added; Metro Div 20 improvements shown
2	12/21	
3	6/22	

DESIGNED BY M.AGUILAR
DRAWN BY M.AGUILAR
CHECKED BY I.ALTARES
IN CHARGE T.KIM
DATE 3/05/2021

REGISTERED PROFESSIONAL ENGINEER — No. — Exp. — CIVIL — STATE OF CALIFORNIA

Metro
LOS ANGELES COUNTY
METROPOLITAN TRANSPORTATION AUTHORITY

BA INC (DISADVANTAGED BUSINESS ENTERPRISE) TRUE ENGINEERING EXCELLENCE
HDR ENGINEERING 350 S. GRAND AVENUE SUITE 2000 LOS ANGELES, CA 90071 (213) 239-5800

SUBMITTED: _____ PROJECT MANAGER
APPROVED: _____

LINK UNION STATION PROJECT
UTILITIES
COMPOSITE UTILITY PLANS
SHEET 8 OF 9

CONTRACT NO
DRAWING NO CU-108
REV
SCALE 1"=40'
SHEET NO 126

Plot Driver=$PLTDRV$$ Pentable=PlotStamp.tbl USER = magular 2:35:45 PM 2/25/2022 $FILE$

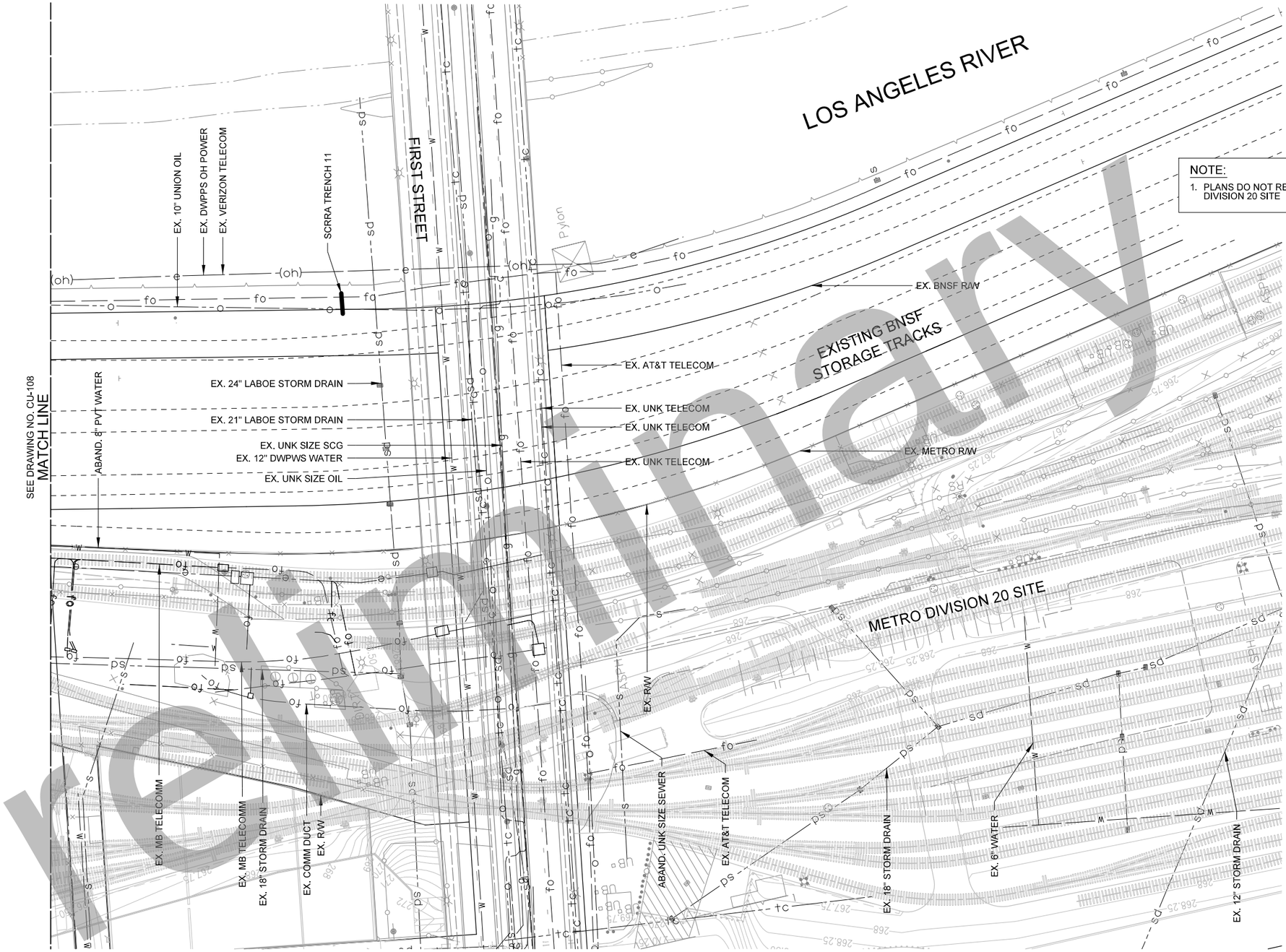

NOTE:

1. PLANS DO NOT REFLECT THE FUTURE CONDITION OF THE METRO DIVISION 20 SITE

35% DESIGN PLANS
NOT FOR CONSTRUCTION

Preliminary

Original plan submittal made in Aug. 2019

THE PREPARATION OF THIS DRAWING HAS BEEN FINANCED IN PART THROUGH A GRANT FROM THE U.S. DEPARTMENT OF TRANSPORTATION, FEDERAL TRANSIT ADMINISTRATION (FTA), UNDER THE FEDERAL TRANSIT ACT OF 1964, AS AMENDED, AND IN PART BY THE TAXES OF THE CITIZENS OF LOS ANGELES COUNTY AND OF THE STATE OF CALIFORNIA.

Rev No.	Date	Description
1	3/21	Pothole/trench locations added
2	12/21	
3	6/22	

DESIGNED BY M.AGUILAR
DRAWN BY M.AGUILAR
CHECKED BY I.ALTARES
IN CHARGE T.KIM
DATE 3/05/2021

REGISTERED PROFESSIONAL ENGINEER No. Exp. CIVIL STATE OF CALIFORNIA

Metro
LOS ANGELES COUNTY
METROPOLITAN TRANSPORTATION AUTHORITY

BA INC TRUE ENGINEERING EXCELLENCE

HDR ENGINEERING
350 S. GRAND AVENUE SUITE 3200
LOS ANGELES, CA 90071
(213) 236-5800

SUBMITTED: _____ PROJECT MANAGER
APPROVED: _____

LINK UNION STATION PROJECT
UTILITIES
COMPOSITE UTILITY PLANS
SHEET 9 OF 9

CONTRACT NO
DRAWING NO CU-109 REV
SCALE 1"=40'
SHEET NO 127

Plot Driver=$PLTDRVS$ Pentable=PlotStamp.tbl USER = rmaguilar 9:20:54 AM 2/23/2022 $FILE$

Link US Project
Utility Investigation Work Plan for Work within SCRRA Right-of-Way
Phase A

Location Number	Location/ Element	Exploration Type	Purpose	Potential Conflict	Depth (feet)	Trench Length (feet)	Work Period	Work Window	Details/Requirements
1	WMH retaining wall, north end	Trench	To confirm location is clear of existing subsurface utilities not previously identified	None currently identified	8	10	Weekdays	Watchman	Location to be accessed via Bolero Lane. Vehicles to park along Bolero Lane or adjacent walkway to the south. Work requires notification of William Mead Homes (WMH) residents.
2	WMH retaining wall at Bloom Street terminus	Trench	To confirm location is clear of existing subsurface utilities not previously identified	None currently identified	4	10	Weekdays	Watchman	Location to be accessed via Bolero Lane. Vehicles/equipment to park along Bolero Lane or adjacent walkway to the south. Work requires notification of William Mead Homes residents.
3	WMH retaining wall just south of Bloom Street and drainage inlet	Trench	To confirm location/depth of existing sewer line crossing wall	Proposed WMH wall and existing sewer line	4	10	Weekdays	Watchman	Location to be accessed via Bolero Lane. Vehicles/equipment to park along Bolero Lane or adjacent walkway to the south. Work requires notification of William Mead Homes residents.
4	WMH retaining wall at crossing of existing subsurface telecom lines	Trench	To confirm location/depth of existing Verizon telecom line (1 of 2) crossing wall	Proposed WMH wall and existing Verizon line	4	10	Weekdays	Watchman	Location to be accessed via Bolero Lane. Vehicles/equipment to park along Bolero Lane or adjacent walkway to the south. Work requires notification of William Mead Homes residents.
5	Crossing of existing UG telecom lines with proposed WMH wall	Trench	To confirm location/depth of existing Verizon telecom line (2 of 2) crossing wall	Proposed WMH wall and existing Verizon line	4	10	Weekdays	Watchman	Location to be accessed via Bolero Lane. Vehicles to park along Bolero Lane or adjacent walkway to the south. Work requires notification of William Mead Homes residents.
6	North side of existing track area located adjacent to WMH parking lot at Bolero Lane terminus	Trench	To confirm location/depth of existing telecom/FO lines running along north side of and parallel to tracks	Proposed Phase B lead tracks and existing telecom (Verizon, Sprint) telecom lines	4	20	Weekend day hours	Limited track window with nearest track out of service	Location to be accessed via SCRRA maintenance road running along north side of tracks within rail R/W. Trench to be backfilled with native material to 90 % compaction and ballast replaced in kind.
7	North side of existing track area located just west of existing signal house adjacent to WMH ball field	Trench	To confirm location/depth of existing telecom/FO lines running along north side of and parallel to tracks	Proposed Phase B lead tracks and existing telecom (Verizon, Sprint) telecom lines	4	20	Weekend day hours	Limited track window with nearest track out of service	Location to be accessed via SCRRA maintenance road running along north side of tracks within rail R/W. Trench to be backfilled with slurry. Pavement to be temporary replaced with asphalt cold patch when work is completed and and permanently replaced with HMA and aggregate base within 2 weeks.
8	Existing access road within station area along south end of platforms, between Platforms 5 and 6	Trench	To confirm location and depth of existing subsurface gas, sewer, and water lines at location of trench	Existing access road to be lowered as part of Phase A work	4	20	Weekday night hours	Watchman	One lane of access road to be maintained during completion of work. Trench to be temporarily covered with steel plate after work is completed each night. Trench to be permanently backfilled with slurry and concrete pavement to be restored upon completion of work
9	Existing access road within station area just west of Gold Line crossing	Trench	To confirm location/depth of existing subsurface water line at trench location	Existing access road to be lowered as part of Phase A work and retaining wall to be constructed along north side of lowered access road at location of water line	4	10	Weekday night hours	Watchman	One lane of access road to be maintained during completion of work. Trench to be temporarily covered with steel plate after work is completed each night. Trench to be permanently backfilled with slurry and concrete pavement to be restored upon completion of work.
10	Trench Deleted								
11	Between SCRRA mainline tracks and west bank of LA River just north of First St Bridge	Trench	To confirm locations of existing subsurface oil and telecom lines lines at the crossing of proposed storm drain	Proposed storm drain line and existing oil and telecom lines	8	25	Weekend night hours	Form B	Location to be accessed through gate at Commercial Street terminus. Vehicles/equipment to be parked along LA River levee on east side of tracks. Trench to be backfilled with native material to 90 % compaction and ballast replaced in kind
	Additional Trenches Requested by SCRRA								
12	South side of existing track area across from William Mead Homes athletic field and adjacent to jail parking structure, approximately 300' east of existing signal bridge at location of proposed new CP Mission signal bungalow.	Trench	To check for existing subsurface utilities at proposed signal house location (east side)	Any utilities that may be in conflict with proposed signal house	5	14	Weekend day hours	Limited track window with nearest track out of service	Location to be accessed via SCRRA maintenance road running along north side of tracks within rail R/W. Trench to be backfilled with slurry. Pavement to be temporary replaced with asphalt cold patch when work is completed and and permanently replaced with HMA and aggregate base within 2 weeks.
13	South side of existing track area adjacent to jail parking structure, approximately 300' east of existing signal bridge at location of proposed new CP Mission signal bungalow.	Trench	To check for existing subsurface utilities at proposed signal house location (west side)	Any utilities that may be in conflict with proposed signal house	5	14	Weekend day hours	Limited track window with nearest track out of service	Location to be accessed via SCRRA maintenance road running along north side of tracks within rail R/W. Trench to be backfilled with slurry. Pavement to be temporary replaced with asphalt cold patch when work is completed and and permanently replaced with HMA and aggregate base within 2 weeks.
14	South side of existing track area through horizontal curve adjacent to jail at location of proposed new CP Terminal signal bungalow.	Trench	To check for existing subsurface utilities at proposed signal house location (east side)	Any utilities that may be in conflict with proposed signal house	5	14	Weekend day hours	Limited track window with nearest track out of service	Location to be accessed via SCRRA maintenance road running along north side of tracks within rail R/W. Trench to be backfilled with slurry. Pavement to be temporary replaced with asphalt cold patch when work is completed and and permanently replaced with HMA and aggregate base within 2 weeks.
15	South side of existing track area through horizontal curve adjacent to jail at location of proposed new CP Terminal signal bungalow.	Trench	To check for existing subsurface utilities at proposed signal house location (west side)	Any utilities that may be in conflict with proposed signal house	5	14	Weekend day hours	Limited track window with nearest track out of service	Location to be accessed via SCRRA maintenance road running along north side of tracks within rail R/W. Trench to be backfilled with slurry Pavement to be temporary replaced with asphalt cold patch when work is completed and and permanently replaced with HMA and aggregate base within 2 weeks.

NOTES:

1. **POTHOLES/TRENCHES ON SHEETS CU-304 THROUGH CU-308 HAVE BEEN COMPLETED AND RESULTS ARE NOT REFLECTED IN THIS PACKAGE.**

Preliminary

35% DESIGN PLANS
NOT FOR CONSTRUCTION

Original plan submittal made in Aug. 2019

THE PREPARATION OF THIS DRAWING HAS BEEN FINANCED IN PART THROUGH A GRANT FROM THE U.S. DEPARTMENT OF TRANSPORTATION, FEDERAL TRANSIT ADMINISTRATION (FTA), UNDER THE FEDERAL TRANSIT ACT OF 1964, AS AMENDED, AND IN PART BY THE TAXES OF THE CITIZENS OF LOS ANGELES COUNTY AND OF THE STATE OF CALIFORNIA.

Rev No.	Date	Description
1	3/21	Plan added to set
2	12/21	
3	6/22	

DESIGNED BY M.AGUILAR
DRAWN BY M.AGUILAR
CHECKED BY I.ALTARES
IN CHARGE T.KIM
DATE 3/05/2021

REGISTERED PROFESSIONAL ENGINEER — No. Exp. CIVIL — STATE OF CALIFORNIA

Metro — LOS ANGELES COUNTY METROPOLITAN TRANSPORTATION AUTHORITY

BA Inc — TRUE ENGINEERING EXCELLENCE

HDR ENGINEERING, 500 S. GRAND AVENUE SUITE 1200, LOS ANGELES, CA 90071, (213) 236-0800

SUBMITTED: _____ PROJECT MANAGER

APPROVED: _____

LINK UNION STATION PROJECT
UTILITIES
PROP SCRRA TRENCH SUMMARY TABLE

CONTRACT NO
DRAWING NO CU-304 REV
SCALE NO SCALE
SHEET NO 128

Plot Driver=$PLTDRVS$ Pentable=PlotStamp.tbl USER = magular 8:07:21 AM 3/2/2022 $FILE$

Link US Project
Link US Project Utility Investigation Work Plan for Work within Caltrans Right-of-Way
Phase A

Location Number	Location/ Element	Exploration Type	Purpose	Potential Conflict	Depth (feet)	Trench Length (feet)	Likely Access	Approving Agency	Materials Needed for Approval	Comments
1	East side of Bent 2L along El Monte Busway	Trench	To confirm there no utilities within the limits of the column foundation	No utilities currently identified at this location	8	10	El Monte Busway	Caltrans	Encroachment permit	Located within existing right shoulder of busway. Will require removal/replacement of existing AC pavement at trench.
2	West side of Bent 2L along El Monte Busway	Trench	To confirm there no utilities within the limits of the column foundation	No utilities currently identified at this location	8	10	El Monte Busway	Caltrans	Encroachment permit	Located within existing right shoulder of busway. Will require removal/replacement of existing AC pavement at trench.
3	Bent 4R in median	Trench	To confirm there no utilities within the limits of the column foundation	Potential conflict with adjacent sewer line depending on actual line location	8	10	NB US-101	Caltrans	Encroachment permit	Located within existing freeway median. Will require removal/replacement of existing AC pavement at trench.
4	Bent 5L, column in median	Pothole	To confirm there no utilities within the limits of the column foundation	Likely conflict with adjacent sewer line depending on actual line location	As needed		NB US-101	Caltrans	Encroachment permit	Located within existing inside shoulder along NB US-101. Will require removal/replacement of existing AC pavement at pothole.
5	Bent 6L, column in median	Pothole	To confirm there no utilities within the limits of the column foundation	Likely conflict with adjacent sewer line depending on actual line location	As needed		NB US-101	City of LA	Encroachment permit	Located within existing inside shoulder along NB US-101. Will require removal/replacement of existing AC pavement at pothole.
6	Existing FO line located within Caltrans R/W at location of old SB on-ramp from Commercial Street (old Vignes St)	Pothole	To confirm FO line is outside the limits of the proposed US-101 structure abutment	Potential conflict with structure abutment	As needed		US-101	Caltrans	Encroachment permit	Pothole located within existing fenced in area where old on-ramp used to be. Pothole to be repaired with cold patch asphalt.
7	Within northerly Commercial St sidewalk at location of south edge of US-101 abutment	Trench	To confirm absence of utilities at south end of proposed Bent 9.	Any utilities found within trench might be in conflict with abutment	8	20	Commercial St	Caltrans	Encroachment permit	Pothole located within existing fenced in area where old on-ramp used to be. Pothole to be repaired with cold patch asphalt.
8	Within old Vignes Street R/W north of Commercial Street	Trench	To confirm absence of utilities at proposed Bent 8 column location and to positively locate adjacent sewer line.	None currently identified	8	20	SB US-101 on ramp or Commercial Street	Caltrans	Encroachment permit	Area currently fenced off with no access gate.
9	Within old Vignes Street R/W north of Commercial Street	Trench	To confirm absence of utilities at proposed Bent 8 column location and to positively locate adjacent sewer line.	None currently identified	8	20	SB US-101 on ramp or Commercial Street	Caltrans	Encroachment permit	Area currently fenced off with no access gate

NOTES:

1. **POTHOLES/TRENCHES ON SHEETS CU-304 THROUGH CU-308 HAVE BEEN COMPLETED AND RESULTS ARE NOT REFLECTED IN THIS PACKAGE.**

Preliminary

35% DESIGN PLANS
NOT FOR CONSTRUCTION

Original plan submittal made in Aug. 2019

THE PREPARATION OF THIS DRAWING HAS BEEN FINANCED IN PART THROUGH A GRANT FROM THE U.S. DEPARTMENT OF TRANSPORTATION, FEDERAL TRANSIT ADMINISTRATION (FTA), UNDER THE FEDERAL TRANSIT ACT OF 1964, AS AMENDED, AND IN PART BY THE TAXES OF THE CITIZENS OF LOS ANGELES COUNTY AND OF THE STATE OF CALIFORNIA.

Rev No.	Date	Description
1	3/21	Plan added to set
2	12/21	
3	6/22	

DESIGNED BY M.AGUILAR
DRAWN BY M.AGUILAR
CHECKED BY I.ALTARES
IN CHARGE T.KIM
DATE 3/05/2021

REGISTERED PROFESSIONAL ENGINEER — No. EXP. CIVIL — STATE OF CALIFORNIA

Metro — LOS ANGELES COUNTY METROPOLITAN TRANSPORTATION AUTHORITY

BA INC — TRUE ENGINEERING EXCELLENCE

HDR ENGINEERING, 350 S. GRAND AVENUE SUITE 2500 LOS ANGELES, CA 90071 (213) 236-5800

SUBMITTED: _____ PROJECT MANAGER

APPROVED: _____

LINK UNION STATION PROJECT
UTILITIES
PROP CALTRANS TRENCH SUMMARY TABLE

CONTRACT NO
DRAWING NO CU-305 REV
SCALE NO SCALE
SHEET NO 129

$FILE$ 3/2/2022 8:09:48 AM USER = maguilar Pentable=PlotStamp.tbl Plot Driver=$PLTDRVS$

Link US Project
Utility Investigation Data Summary Table - City of Los Angeles Right-of-Way
Phase A

Location Number	Location/ Element	Exploration Type	Purpose	Potential Conflict	Depth (feet)	Pothole Dia (inches)	Trench Length (feet)	Trench Width (inches)	Access	Comments
1	Location of proposed engineered steel LADWP power pole at southwest corner of Commercial/Vignes intersection.	Pothole	To confirm there are no utilities at the location of the proposed power pole.	Current base mapping shows this area clear of existing utilities.	25	approx . 18"	NA	NA	Vignes Street	Vacuum extraction truck to park along curb at pothole location to complete work.
2	Location of proposed engineered steel LADWP power pole along north side of Commercial Street within sidewalk area approximately 50' east of Vignes Street stop bar.	Pothole	To confirm there are no utilities at the location of the proposed power pole.	Current base mapping shows potential subsurfaceabandoned gas line along sidewalk.	25	approx . 18"	NA	NA	Commercial Street	Vacuum extraction truck to park along curb at pothole location to complete work.
2A	Location of proposed engineered steel LADWP power pole along north side of Commercial Street within sidewalk area approximately 35' west of ECR of Center Street curb return	Pothole	To confirm there are no utilities at the location of the proposed power pole.	Current base mapping shows potential subsurfaceabandoned gas line along sidewalk.	25	approx . 18"	NA	NA	Commercial Street	Vacuum extraction truck to park along curb at pothole location to complete work.
3	Location of proposed outrigger bent column within existing traffic island at Commercial/Center intersection	Trench	To confirm there no utilities within the limits of the column foundation	There are several utilities within the limits of the column that might be in conflict	8	NA	19 (Commercial) 14 (Center)	12	Center/Commercial Streets	Requires removal/replacement of existing AC pavement section
4	Trench deleted									
5	Commercial Street east of Center Street in front of Life Storage Building	Trench	To identify/confirm existing utilities within Commercial Street at trench location	Conflict between existing utilities and Center Street bridge abutment	8	NA	30	12	Commercial St	Requires removal/replacement of existing AC pavement section
6	Commercial Street east of Center Street in front of Life Storage Building	Trench	To identify/confirm existing utilities within Commercial Street at trench location	Conflict between existing utilities and Retained Fill Wall	8	NA	50	12	Commercial St	Requires removal/replacement of existing AC pavement section. Cannot block driveway into self storage building

Preliminary

NOTES:

1. **POTHOLES/TRENCHES ON SHEETS CU-304 THROUGH CU-308 HAVE BEEN COMPLETED AND RESULTS ARE NOT REFLECTED IN THIS PACKAGE.**

35% DESIGN PLANS
NOT FOR CONSTRUCTION

Original plan submittal made in Aug. 2019

THE PREPARATION OF THIS DRAWING HAS BEEN FINANCED IN PART THROUGH A GRANT FROM THE U.S. DEPARTMENT OF TRANSPORTATION, FEDERAL TRANSIT ADMINISTRATION (FTA), UNDER THE FEDERAL TRANSIT ACT OF 1964, AS AMENDED, AND IN PART BY THE TAXES OF THE CITIZENS OF LOS ANGELES COUNTY AND OF THE STATE OF CALIFORNIA.

Rev No.	Date	Description
1	3/21	Plan added to set
2	12/21	
3	6/22	

DESIGNED BY M.AGUILAR
DRAWN BY M.AGUILAR
CHECKED BY I.ALTARES
IN CHARGE T.KIM
DATE 3/05/2021

REGISTERED PROFESSIONAL ENGINEER — No. Exp. CIVIL — STATE OF CALIFORNIA

Metro — LOS ANGELES COUNTY METROPOLITAN TRANSPORTATION AUTHORITY

BA INC — TRUE ENGINEERING EXCELLENCE

HDR ENGINEERING
350 S. GRAND AVENUE
SUITE 2200
LOS ANGELES, CA 90071
(213) 236-5800

SUBMITTED: _____ PROJECT MANAGER

APPROVED: _____

LINK UNION STATION PROJECT
UTILITIES
PROP CITY OF LOS ANGELES TRENCH SUMMARY TABLE

CONTRACT NO
DRAWING NO CU-306
REV
SCALE NO SCALE
SHEET NO 130

Plot Driver=$PLTDRV$$ Pentable=PlotStamp.tbl USER = maguilar 8:12:03 AM 3/2/2022 $FILE$

Link US Project
Utility Investigation Work Plan in BNSF Right-of-Way
Phase A

Location Number	Location/ Element	Exploration Type	Purpose	Potential Conflict	Depth (feet)	Trench Length (feet)	Access
1	Westerly abutment of Amtrak yard lead bridge and retaining wall to the south	Trench	To confirm location of telecom line along abutment and to check for subsurface utilities not previously identified that may be in conflict with abutment and retaining wall	Potential conflicts with bridge abutment and existing subsurface utilities	8	10	Division 20 access road
2	North half of easterly abutment of Amtrak yard lead bridge	Trench	To check for subsurface utilities not previously identified that may be in conflict with abutment	Potential conflicts with bridge abutment and existing subsurface utilities	8	10	Access rail R/W via fence at end of Commercial Street
3	Trench adjacent to westerly retaining wall supporting retained fill section at Jackson Street	Trench	To confirm location of oil line at crossing of retaining wall and to check for any other uknown lines that might cross within trench limits	Potential conflict with utility lines and retaining walls if lines aren't deep enough	8	10	Access rail R/W via gate at end of Commercial Street
4a	Between retaining walls supporting retained fill section at Temple Street	Pothole	To confirm location of gas line at crossing of retaining walls	Potential conflict with utility lines and retaining walls if lines aren't deep enough	25	NA	Access rail R/W via gate at end of Commercial Street
4b	Between retaining walls supporting retained fill section at Temple Street	Pothole	To confirm location of gas line at crossing of retaining walls.	Potential conflict with utility lines and retaining walls if lines aren't deep enough	25	NA	Access rail R/W via gate at end of Commercial Street
5	Existing gas and telecom lines that cross BNSF tracks at Temple Street	Pothole	To confirm locations of gas and telecom lines as they cross BNSF storage tracks and to check for any other uknown lines that might cross within trench limits	Potential conflict with lines and reconstructed BNSF tracks?	25	NA	Access rail R/W via gate at end of Commercial Street
6	Existing telecom line that crosses BNSF tracks south of Temple Street	Pothole	To confirm location and depth of telecom line (or it may be so deep that it's not located) at the crossing of retaining walls supporting run-through tracks	Potential conflict with line and retaining walls supporting run-through tracks	25	NA	Access rail R/W via gate at end of Commercial Street
7	Existing telecom line that crosses retaining wall needed to accommodate lowered Amtrak yard lead south of Temple Street	Pothole	To confirm location and depth of telecom line (or it may be so deep that it's not located) at the crossing of the retaining wall.	Potential conflict with line and retaining wall needed to accommodate Amtrak yard lead.	20	NA	Access rail R/W via gate at end of Commercial Street
8	Existing telecom lines that cross retaining walls supporting track section at Banning Street	Pothole	To confirm locations and depths of lines at crossing	Potential conflict with utility lines and retaining walls if lines aren't deep enough	20	NA	Access rail R/W via gate at end of Commercial Street
9	Existing telecom lines that cross BNSF tracks at Banning Street at Div 20 R/W line.	Pothole	To confirm locations and depths of lines at pothole, including water line running parallel to R/W line.	Potential conflict with lines and reconstructed BNSF tracks	15	NA	Access rail R/W via gate at end of Commercial Street

NOTES:

1. **POTHOLES/TRENCHES ON SHEETS CU-304 THROUGH CU-308 HAVE BEEN COMPLETED AND RESULTS ARE NOT REFLECTED IN THIS PACKAGE.**

Preliminary

35% DESIGN PLANS
NOT FOR CONSTRUCTION

Original plan submittal made in Aug. 2019

THE PREPARATION OF THIS DRAWING HAS BEEN FINANCED IN PART THROUGH A GRANT FROM THE U.S. DEPARTMENT OF TRANSPORTATION, FEDERAL TRANSIT ADMINISTRATION (FTA), UNDER THE FEDERAL TRANSIT ACT OF 1964, AS AMENDED, AND IN PART BY THE TAXES OF THE CITIZENS OF LOS ANGELES COUNTY AND OF THE STATE OF CALIFORNIA.

Rev No.	Date	Description
1	3/21	Plan added to set
2	12/21	
3	6/22	

DESIGNED BY M.AGUILAR
DRAWN BY M.AGUILAR
CHECKED BY I.ALTARES
IN CHARGE T.KIM
DATE 3/05/2021

REGISTERED PROFESSIONAL ENGINEER — No. — Exp. — CIVIL — STATE OF CALIFORNIA

Metro
LOS ANGELES COUNTY
METROPOLITAN TRANSPORTATION AUTHORITY
BA INC TRUE ENGINEERING EXCELLENCE
HDR ENGINEERING
350 S. GRAND AVENUE
SUITE 3200
LOS ANGELES, CA 90071
(213) 236-2800

SUBMITTED: _____ PROJECT MANAGER
APPROVED: _____

LINK UNION STATION PROJECT
UTILITIES
PROP BNSF TRENCH SUMMARY TABLE

CONTRACT NO
DRAWING NO CU-307
REV
SCALE NO SCALE
SHEET NO 131

Plot Driver=$PLTDRV$$ Pentable=PlotStamp.tbl USER = maguilar 8:14:31 AM 3/2/2022 $FILE$

Link US Project
Utility Investigation Work Plan - Trenches in Metro and MWD Owned Properties
Phase A

Location Number	Location/ Element	Exploration Type	Purpose	Potential Conflict	Depth (feet)	Trench Length (feet)	Access	Comments
12	Existing electrical, sewer, water, and gas lines within limits of new access road.	Trench	To confirm location and depth of existing lines at trench location and to confirm there are no other utilities within the limits of the trench	Line will be impacted as part of the lowering of the access road, so we want to confirm the location of the impacted line	4	10	Existing MWD access road	Need right of entry approval from MWD to complete.
3-1	Old Ducommon Street just east of existing Red Line portal trench	Pothole	To identify/confirm existing utilities within Ducommun Street and access road at trench location	Conflict with subsurface utilities and retaining walls and storm drain protection slab supporting tracks at trench location	8	10	Division 20 access road	Located within Division 20 property. Need to obtain right of entry authorization from Metro Ops staff.
3-2	Old Ducommon Street just east of existing Red Line portal trench	Pothole	To identify/confirm existing utilities within Ducommun Street and access road at trench location	Conflict with subsurface utilities and retaining walls and storm drain protection slab supporting tracks at trench location	8	10	Division 20 access road	Located within Division 20 property. Need to obtain right of entry authorization from Metro Ops staff.
3-3	Old Ducommon Street just east of existing Red Line portal trench	Pothole	To identify/confirm existing utilities within Ducommun Street and access road at trench location	Conflict with subsurface utilities and retaining walls and storm drain protection slab supporting tracks at trench location	8	10	Division 20 access road	Located within Division 20 property. Need to obtain right of entry authorization from Metro Ops staff.
1	Existing Division 20 access road just north of crossing with old Ducommun St.	Pothole	To identify/confirm existing utilities within Ducommun Street and access road at trench location	Conflict with subsurface utilities and retaining walls and storm drain protection slab supporting tracks at trench location	As needed	10	Division 20 access road	Located within Division 20 property. Need to obtain right of entry authorization from Metro Ops staff.
2	Existing Division 20 access road just north of crossing with old Ducommun St.	Trench	To identify/confirm existing utilities within Ducommun Street and access road at trench location	Conflict with subsurface utilities and retaining walls and storm drain protection slab supporting tracks at trench location	8	10	Division 20 access road	Located within Division 20 property. Need to obtain right of entry authorization from Metro Ops staff.
4	Electrical line located within area between Division 20 access road and RL portal trench	Trench	To positively locate electrical line at its crossing of the retained fill section supporting the tracks.	Potential conflict with electrical line and retaining walls if electrical line isn't deep enough	8	10	Division 20 access road	Located within Division 20 property. Need to obtain right of entry authorization from Metro Ops staff.
5	Existing utilities within Division 20 access road that will cross under retained fill section supporting tracks	Trench	To confirm locations of existing utilities shown to cross under retained fill section within access road at trench location.	Potential conflict with utility lines and retaining walls if lines aren't deep enough	8	20	Division 20 access road	Located within Division 20 property. Need to obtain right of entry authorization from Metro Ops staff.
MH-1	Existing manhole withing Division 20 access road	Manhole	To identify/confirm existing utilities within the manhole that may present conflicts with the future retaining wall	Potential conflict with utility lines and retaining walls if lines aren't deep enough	N/A	N/A	Division 20 access road	Located within Division 20 property. Need to obtain right of entry authorization from Metro Ops staff. Originally trench 32
32	Trench deleted							
7	Along proposed retaining wall south of Amtrak yard lead bridge	Trench	To identify location of oil line at the crossing of the retaining wall	Potential conflict with oil line	8	10	Division 20 access road	Located within Division 20 property. Need to obtain right of entry authorization from Metro Ops staff

NOTES:

1. **POTHOLES/TRENCHES ON SHEETS CU-304 THROUGH CU-308 HAVE BEEN COMPLETED AND RESULTS ARE NOT REFLECTED IN THIS PACKAGE.**

Preliminary

35% DESIGN PLANS
NOT FOR CONSTRUCTION

Original plan submittal made in Aug. 2019

THE PREPARATION OF THIS DRAWING HAS BEEN FINANCED IN PART THROUGH A GRANT FROM THE U.S. DEPARTMENT OF TRANSPORTATION, FEDERAL TRANSIT ADMINISTRATION (FTA), UNDER THE FEDERAL TRANSIT ACT OF 1964, AS AMENDED, AND IN PART BY THE TAXES OF THE CITIZENS OF LOS ANGELES COUNTY AND OF THE STATE OF CALIFORNIA.

Rev No.	Date	Description
1	3/21	Plan added to set
2	12/21	
3	6/22	

DESIGNED BY M.AGUILAR
DRAWN BY M.AGUILAR
CHECKED BY I.ALTARES
IN CHARGE T.KIM
DATE 3/05/2021

REGISTERED PROFESSIONAL ENGINEER — No. — EXP. — CIVIL — STATE OF CALIFORNIA

Metro
LOS ANGELES COUNTY
METROPOLITAN TRANSPORTATION AUTHORITY

BA INC — TRUE ENGINEERING EXCELLENCE
HDR ENGINEERING
350 S. GRAND AVENUE
SUITE 2200
LOS ANGELES, CA 90071
(213) 236-0800

SUBMITTED: _____ PROJECT MANAGER
APPROVED: _____

LINK UNION STATION PROJECT
UTILITIES
PROP METRO AND MWD TRENCH SUMMARY TABLE

CONTRACT NO
DRAWING NO CU-308
REV
SCALE NO SCALE
SHEET NO 132

$FILE$ 3/2/2022 8:16:33 AM USER = maguilar Pentable=PlotStamp.tbl Plot Driver=$PLTDRVS$

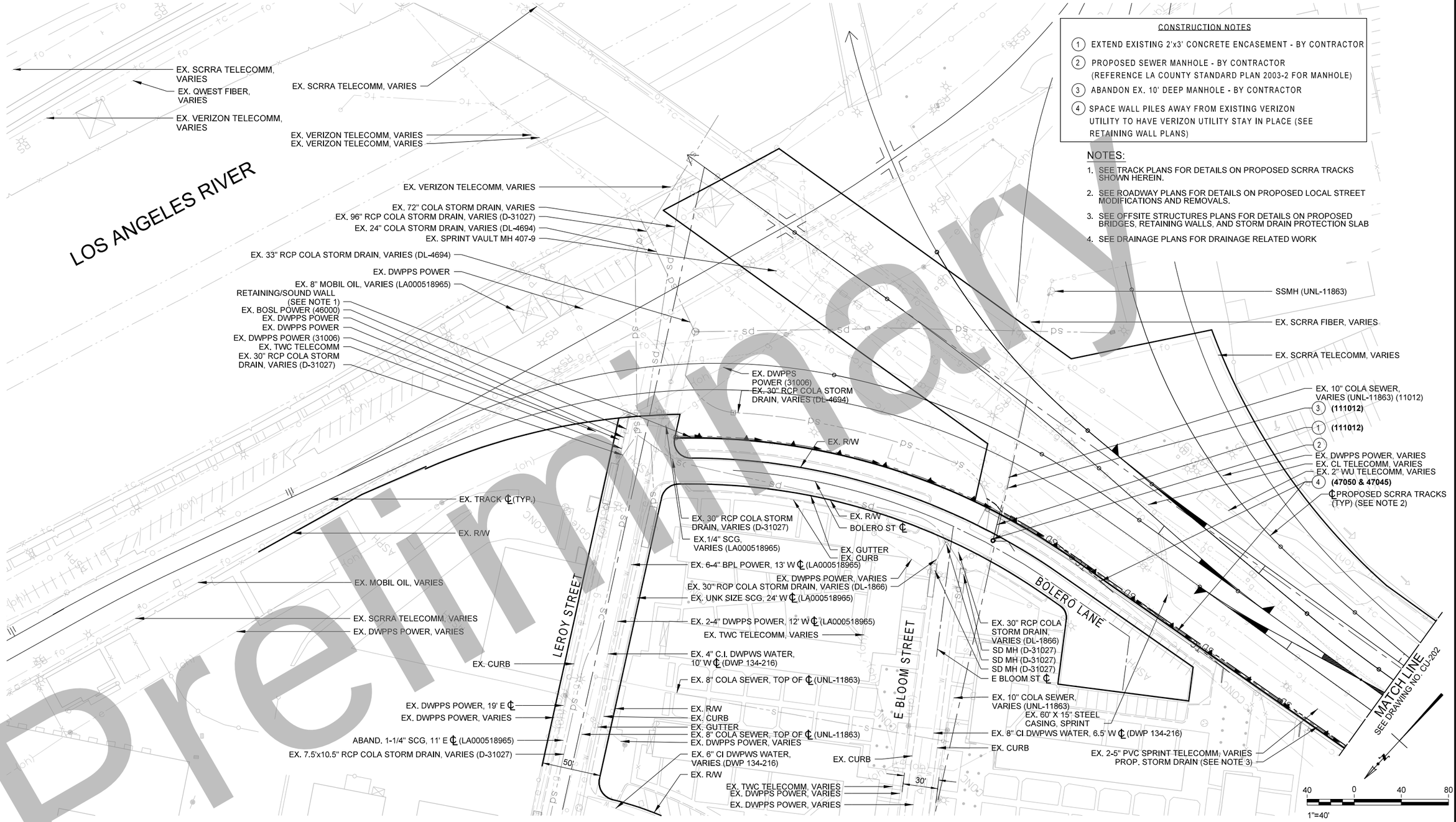

CONSTRUCTION NOTES

1. EXTEND EXISTING 2'x3' CONCRETE ENCASEMENT - BY CONTRACTOR
2. PROPOSED SEWER MANHOLE - BY CONTRACTOR (REFERENCE LA COUNTY STANDARD PLAN 2003-2 FOR MANHOLE)
3. ABANDON EX. 10' DEEP MANHOLE - BY CONTRACTOR
4. SPACE WALL PILES AWAY FROM EXISTING VERIZON UTILITY TO HAVE VERIZON UTILITY STAY IN PLACE (SEE RETAINING WALL PLANS)

NOTES:

1. SEE TRACK PLANS FOR DETAILS ON PROPOSED SCRRA TRACKS SHOWN HEREIN.
2. SEE ROADWAY PLANS FOR DETAILS ON PROPOSED LOCAL STREET MODIFICATIONS AND REMOVALS.
3. SEE OFFSITE STRUCTURES PLANS FOR DETAILS ON PROPOSED BRIDGES, RETAINING WALLS, AND STORM DRAIN PROTECTION SLAB
4. SEE DRAINAGE PLANS FOR DRAINAGE RELATED WORK

Preliminary

35% DESIGN PLANS
NOT FOR CONSTRUCTION

Original plan submittal made in Aug. 2019

THE PREPARATION OF THIS DRAWING HAS BEEN FINANCED IN PART THROUGH A GRANT FROM THE U.S. DEPARTMENT OF TRANSPORTATION, FEDERAL TRANSIT ADMINISTRATION (FTA), UNDER THE FEDERAL TRANSIT ACT OF 1964, AS AMENDED, AND IN PART BY THE TAXES OF THE CITIZENS OF LOS ANGELES COUNTY AND OF THE STATE OF CALIFORNIA.

Rev No.	Date	Description
1	3/21	
2	12/21	
3	6/22	

DESIGNED BY M.AGUILAR
DRAWN BY M.AGUILAR
CHECKED BY I.ALTARES
IN CHARGE T.KIM
DATE 8/01/2019

REGISTERED PROFESSIONAL ENGINEER — No. — Exp. — CIVIL — STATE OF CALIFORNIA

Metro
LOS ANGELES COUNTY METROPOLITAN TRANSPORTATION AUTHORITY

BA INC (SBE/DBE/MBE) TRUE ENGINEERING EXCELLENCE

HDR ENGINEERING
350 S. GRAND AVENUE
SUITE 2200
LOS ANGELES, CA 90071
(213) 236-2800

SUBMITTED: _____ PROJECT MANAGER

APPROVED: _____

LINK UNION STATION PROJECT
UTILITIES
UTILITY RELOCATION PLANS
SHEET 1 OF 9

CONTRACT NO
DRAWING NO CU-201
REV
SCALE 1"=40'
SHEET NO 133

Plot Driver=$PLTDRV$ Pentable=PlotStamp.tbl USER = maguilar 3:22:47 PM 2/24/2022 $FILE$

NO RELOCATIONS ON THIS SHEET

NOTES:

1. SEE TRACK PLANS FOR DETAILS ON PROPOSED SCRRA TRACKS SHOWN HEREIN.
2. SEE ROADWAY PLANS FOR DETAILS ON PROPOSED LOCAL STREET MODIFICATIONS AND REMOVALS.
3. SEE OFFSITE STRUCTURES PLANS FOR DETAILS ON PROPOSED BRIDGES, RETAINING WALLS, AND STORM DRAIN PROTECTION SLAB
4. SEE DRAINAGE PLANS FOR DRAINAGE RELATED WORK

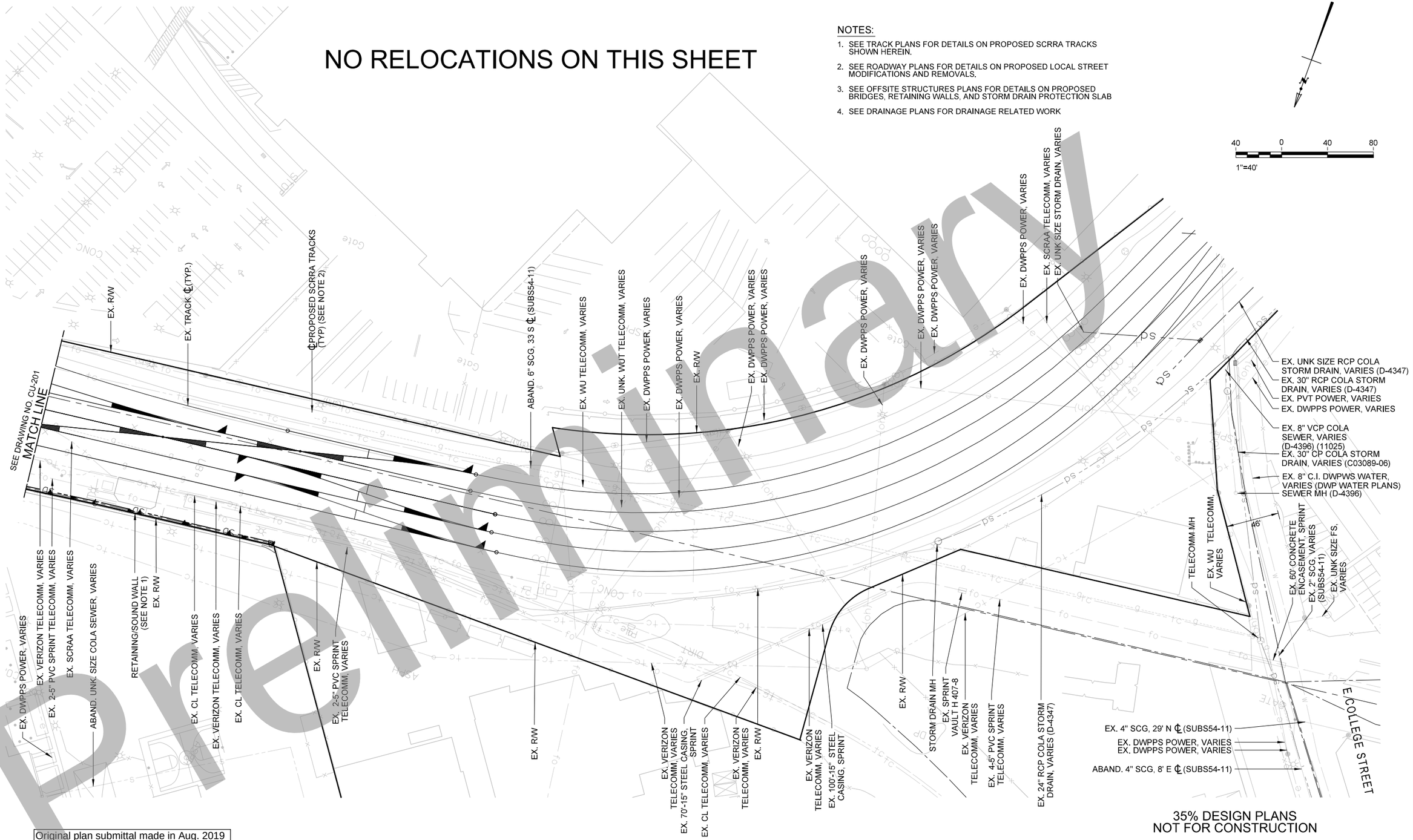

Preliminary

35% DESIGN PLANS
NOT FOR CONSTRUCTION

Original plan submittal made in Aug. 2019

THE PREPARATION OF THIS DRAWING HAS BEEN FINANCED IN PART THROUGH A GRANT FROM THE U.S. DEPARTMENT OF TRANSPORTATION, FEDERAL TRANSIT ADMINISTRATION (FTA), UNDER THE FEDERAL TRANSIT ACT OF 1964, AS AMENDED, AND IN PART BY THE TAXES OF THE CITIZENS OF LOS ANGELES COUNTY AND OF THE STATE OF CALIFORNIA.

Rev No.	Date	Description
1	3/21	
2	12/21	
3	6/22	

DESIGNED BY M.AGUILAR
DRAWN BY M.AGUILAR
CHECKED BY I.ALTARES
IN CHARGE T.KIM
DATE 8/01/2019

REGISTERED PROFESSIONAL ENGINEER
No.
Exp.
CIVIL
STATE OF CALIFORNIA

Metro
LOS ANGELES COUNTY METROPOLITAN TRANSPORTATION AUTHORITY

BA INC
TRUE ENGINEERING EXCELLENCE
HDR ENGINEERING
350 S. GRAND AVENUE SUITE 2900 LOS ANGELES, CA 90071 (213) 239-5800

SUBMITTED: _____ PROJECT MANAGER
APPROVED: _____

LINK UNION STATION PROJECT
UTILITIES
UTILITY RELOCATION PLANS
SHEET 2 OF 9

CONTRACT NO
DRAWING NO CU-202
REV
SCALE 1"=40'
SHEET NO 134

Plot Driver=$PLTDRV$$ Pentable=PlotStamp.tbl USER = maguilar 3:24:19 PM 2/24/2022 $FILE$

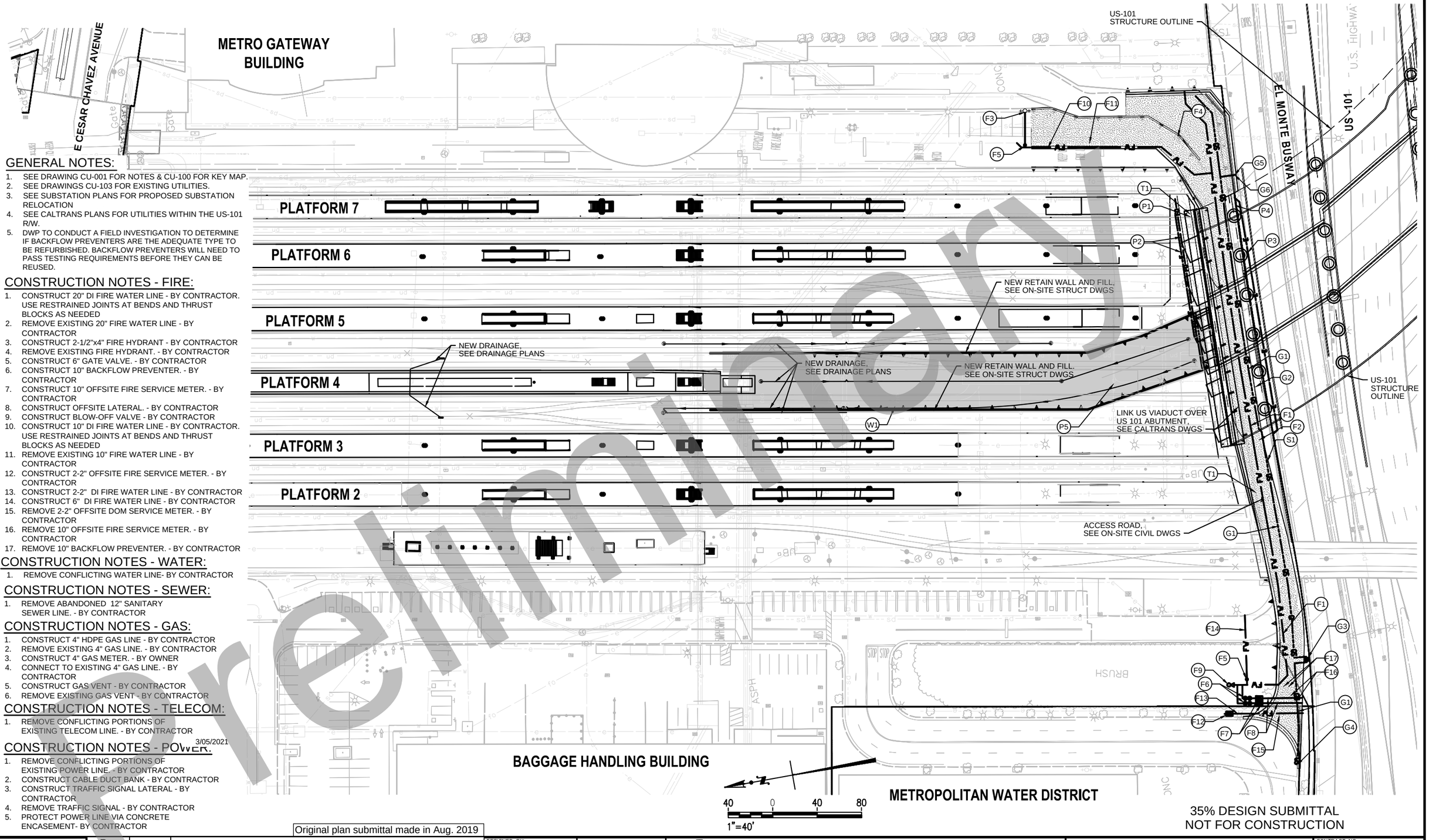

GENERAL NOTES:

1. SEE DRAWING CU-001 FOR NOTES & CU-100 FOR KEY MAP.
2. SEE DRAWINGS CU-103 FOR EXISTING UTILITIES.
3. SEE SUBSTATION PLANS FOR PROPOSED SUBSTATION RELOCATION
4. SEE CALTRANS PLANS FOR UTILITIES WITHIN THE US-101 R/W.
5. DWP TO CONDUCT A FIELD INVESTIGATION TO DETERMINE IF BACKFLOW PREVENTERS ARE THE ADEQUATE TYPE TO BE REFURBISHED. BACKFLOW PREVENTERS WILL NEED TO PASS TESTING REQUIREMENTS BEFORE THEY CAN BE REUSED.

(F#) CONSTRUCTION NOTES - FIRE:

1. CONSTRUCT 20" DI FIRE WATER LINE - BY CONTRACTOR. USE RESTRAINED JOINTS AT BENDS AND THRUST BLOCKS AS NEEDED
2. REMOVE EXISTING 20" FIRE WATER LINE - BY CONTRACTOR
3. CONSTRUCT 2-1/2"x4" FIRE HYDRANT - BY CONTRACTOR
4. REMOVE EXISTING FIRE HYDRANT. - BY CONTRACTOR
5. CONSTRUCT 6" GATE VALVE. - BY CONTRACTOR
6. CONSTRUCT 10" BACKFLOW PREVENTER. - BY CONTRACTOR
7. CONSTRUCT 10" OFFSITE FIRE SERVICE METER. - BY CONTRACTOR
8. CONSTRUCT OFFSITE LATERAL. - BY CONTRACTOR
9. CONSTRUCT BLOW-OFF VALVE - BY CONTRACTOR
10. CONSTRUCT 10" DI FIRE WATER LINE - BY CONTRACTOR. USE RESTRAINED JOINTS AT BENDS AND THRUST BLOCKS AS NEEDED
11. REMOVE EXISTING 10" FIRE WATER LINE - BY CONTRACTOR
12. CONSTRUCT 2-2" OFFSITE FIRE SERVICE METER. - BY CONTRACTOR
13. CONSTRUCT 2-2" DI FIRE WATER LINE - BY CONTRACTOR
14. CONSTRUCT 6" DI FIRE WATER LINE - BY CONTRACTOR
15. REMOVE 2-2" OFFSITE DOM SERVICE METER. - BY CONTRACTOR
16. REMOVE 10" OFFSITE FIRE SERVICE METER. - BY CONTRACTOR
17. REMOVE 10" BACKFLOW PREVENTER. - BY CONTRACTOR

(W#) CONSTRUCTION NOTES - WATER:

1. REMOVE CONFLICTING WATER LINE- BY CONTRACTOR

(S#) CONSTRUCTION NOTES - SEWER:

1. REMOVE ABANDONED 12" SANITARY SEWER LINE. - BY CONTRACTOR

(G#) CONSTRUCTION NOTES - GAS:

1. CONSTRUCT 4" HDPE GAS LINE - BY CONTRACTOR
2. REMOVE EXISTING 4" GAS LINE. - BY CONTRACTOR
3. CONSTRUCT 4" GAS METER. - BY OWNER
4. CONNECT TO EXISTING 4" GAS LINE. - BY CONTRACTOR
5. CONSTRUCT GAS VENT - BY CONTRACTOR
6. REMOVE EXISTING GAS VENT - BY CONTRACTOR

(T#) CONSTRUCTION NOTES - TELECOM:

1. REMOVE CONFLICTING PORTIONS OF EXISTING TELECOM LINE. - BY CONTRACTOR

(E#) CONSTRUCTION NOTES - POWER:

3/05/2021

1. REMOVE CONFLICTING PORTIONS OF EXISTING POWER LINE. - BY CONTRACTOR
2. CONSTRUCT CABLE DUCT BANK - BY CONTRACTOR
3. CONSTRUCT TRAFFIC SIGNAL LATERAL - BY CONTRACTOR
4. REMOVE TRAFFIC SIGNAL - BY CONTRACTOR
5. PROTECT POWER LINE VIA CONCRETE ENCASEMENT- BY CONTRACTOR

Preliminary

Original plan submittal made in Aug. 2019

THE PREPARATION OF THIS DRAWING HAS BEEN FINANCED IN PART THROUGH A GRANT FROM THE U.S. DEPARTMENT OF TRANSPORTATION, FEDERAL TRANSIT ADMINISTRATION (FTA), UNDER THE FEDERAL TRANSIT ACT OF 1964, AS AMENDED, AND IN PART BY THE TAXES OF THE CITIZENS OF LOS ANGELES COUNTY AND OF THE STATE OF CALIFORNIA.

Rev No.	Date	Description
1	3/21	Updated to show additional detail & construction notes
2	12/21	
3	6/22	

DESIGNED BY	M.AGUILAR
DRAWN BY	M.AGUILAR
CHECKED BY	I.ALTARES
IN CHARGE	T.KIM
DATE	3/05/2021

Metro

LOS ANGELES COUNTY
METROPOLITAN TRANSPORTATION AUTHORITY

BA INC — BASE ENGINEERING EXCELLENCE

HDR ENGINEERING
350 S. GRAND AVENUE
SUITE 1300
LOS ANGELES, CA 90071
(213) 239-5800

SUBMITTED: _____ PROJECT MANAGER

APPROVED: _____

LINK UNION STATION PROJECT

UTILITY RELOCATION PLANS
SHEET 3 OF 9

CONTRACT NO	
DRAWING NO	CU-203
REV	--
SCALE	1" = 40'
SHEET NO	135

35% DESIGN SUBMITTAL
NOT FOR CONSTRUCTION

5/4/2020 11:15:18 AM USER = MAGUILAR
C:\PWWORKING\SACD\10049851\LUS-CU-20# STATION PROPOSED UTILITY PLAN.DWG

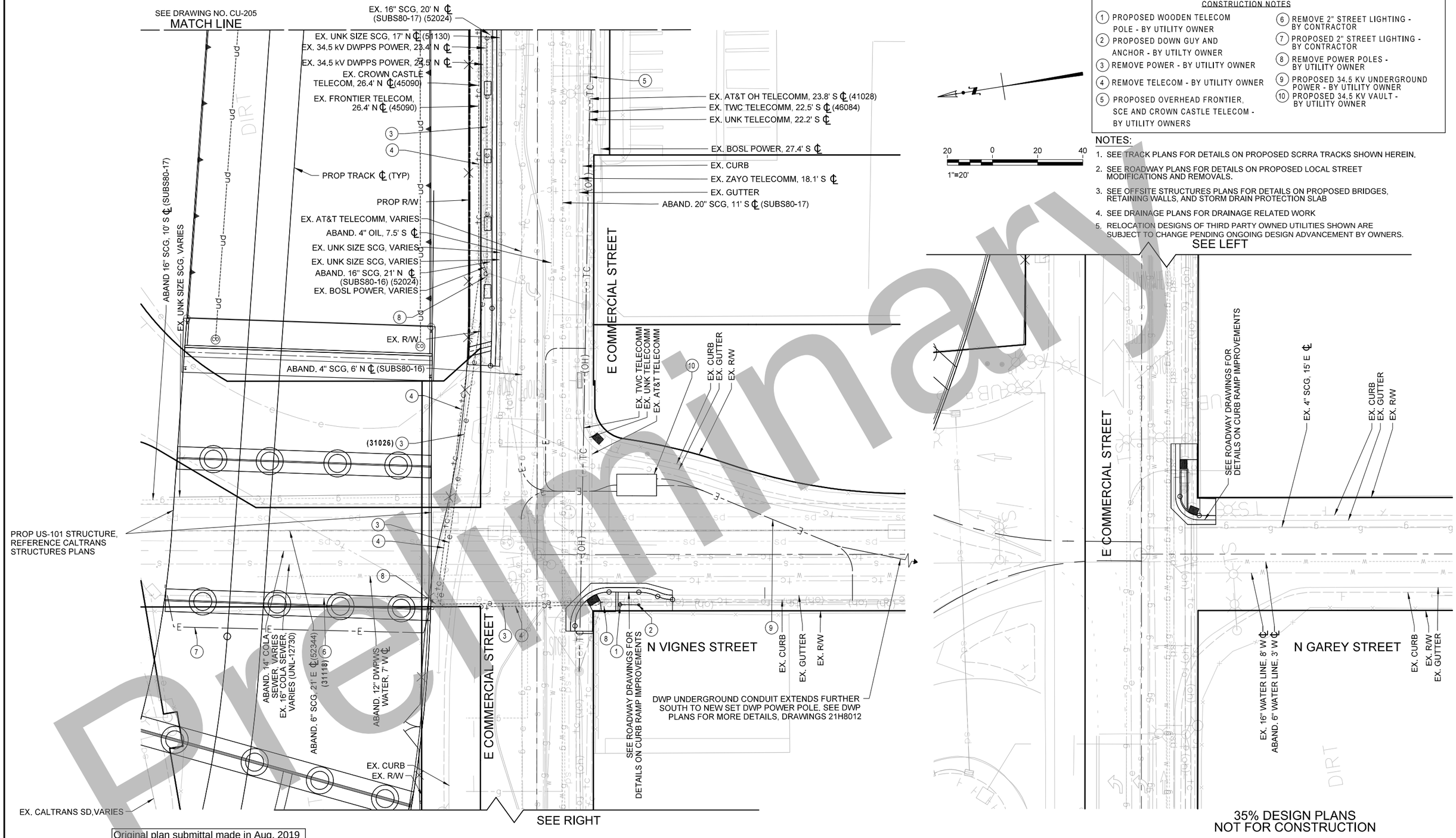

CONSTRUCTION NOTES

1. PROPOSED WOODEN TELECOM POLE - BY UTILITY OWNER
2. PROPOSED DOWN GUY AND ANCHOR - BY UTILTY OWNER
3. REMOVE POWER - BY UTILITY OWNER
4. REMOVE TELECOM - BY UTILITY OWNER
5. PROPOSED OVERHEAD FRONTIER, SCE AND CROWN CASTLE TELECOM - BY UTILITY OWNERS
6. REMOVE 2" STREET LIGHTING - BY CONTRACTOR
7. PROPOSED 2" STREET LIGHTING - BY CONTRACTOR
8. REMOVE POWER POLES - BY UTILITY OWNER
9. PROPOSED 34.5 KV UNDERGROUND POWER - BY UTILITY OWNER
10. PROPOSED 34.5 KV VAULT - BY UTILITY OWNER

NOTES:

1. SEE TRACK PLANS FOR DETAILS ON PROPOSED SCRRA TRACKS SHOWN HEREIN.
2. SEE ROADWAY PLANS FOR DETAILS ON PROPOSED LOCAL STREET MODIFICATIONS AND REMOVALS.
3. SEE OFFSITE STRUCTURES PLANS FOR DETAILS ON PROPOSED BRIDGES, RETAINING WALLS, AND STORM DRAIN PROTECTION SLAB
4. SEE DRAINAGE PLANS FOR DRAINAGE RELATED WORK
5. RELOCATION DESIGNS OF THIRD PARTY OWNED UTILITIES SHOWN ARE SUBJECT TO CHANGE PENDING ONGOING DESIGN ADVANCEMENT BY OWNERS.

Preliminary

35% DESIGN PLANS
NOT FOR CONSTRUCTION

Original plan submittal made in Aug. 2019

THE PREPARATION OF THIS DRAWING HAS BEEN FINANCED IN PART THROUGH A GRANT FROM THE U.S. DEPARTMENT OF TRANSPORTATION, FEDERAL TRANSIT ADMINISTRATION (FTA), UNDER THE FEDERAL TRANSIT ACT OF 1964, AS AMENDED, AND IN PART BY THE TAXES OF THE CITIZENS OF LOS ANGELES COUNTY AND OF THE STATE OF CALIFORNIA.

Rev No.	Date	Description
1	3/21	Updated to reflect latest third party relocation concepts and Amay's property preservation
2	12/21	
3	6/22	Updated third party relocation concepts and street improvements shown

DESIGNED BY M.AGUILAR
DRAWN BY M.AGUILAR
CHECKED BY I.ALTARES
IN CHARGE T.KIM
DATE 6/01/2022

REGISTERED PROFESSIONAL ENGINEER — No. Exp. CIVIL — STATE OF CALIFORNIA

Metro
LOS ANGELES COUNTY METROPOLITAN TRANSPORTATION AUTHORITY

BA INC — TRUE ENGINEERING EXCELLENCE
HDR ENGINEERING — 350 S. GRAND AVENUE SUITE 2200 LOS ANGELES, CA 90071 (213) 239-5800

SUBMITTED: _____ PROJECT MANAGER
APPROVED: _____

LINK UNION STATION PROJECT
UTILITIES
UTILITY RELOCATION PLANS
SHEET 4 OF 9

CONTRACT NO
DRAWING NO CU-204 REV
SCALE 1"=20'
SHEET NO 136

Plot Driver=$PLTDRV$$ Pentable=PlotStamp.tbl USER = maguilar 1:15:22 PM 5/25/2022 $FILE$

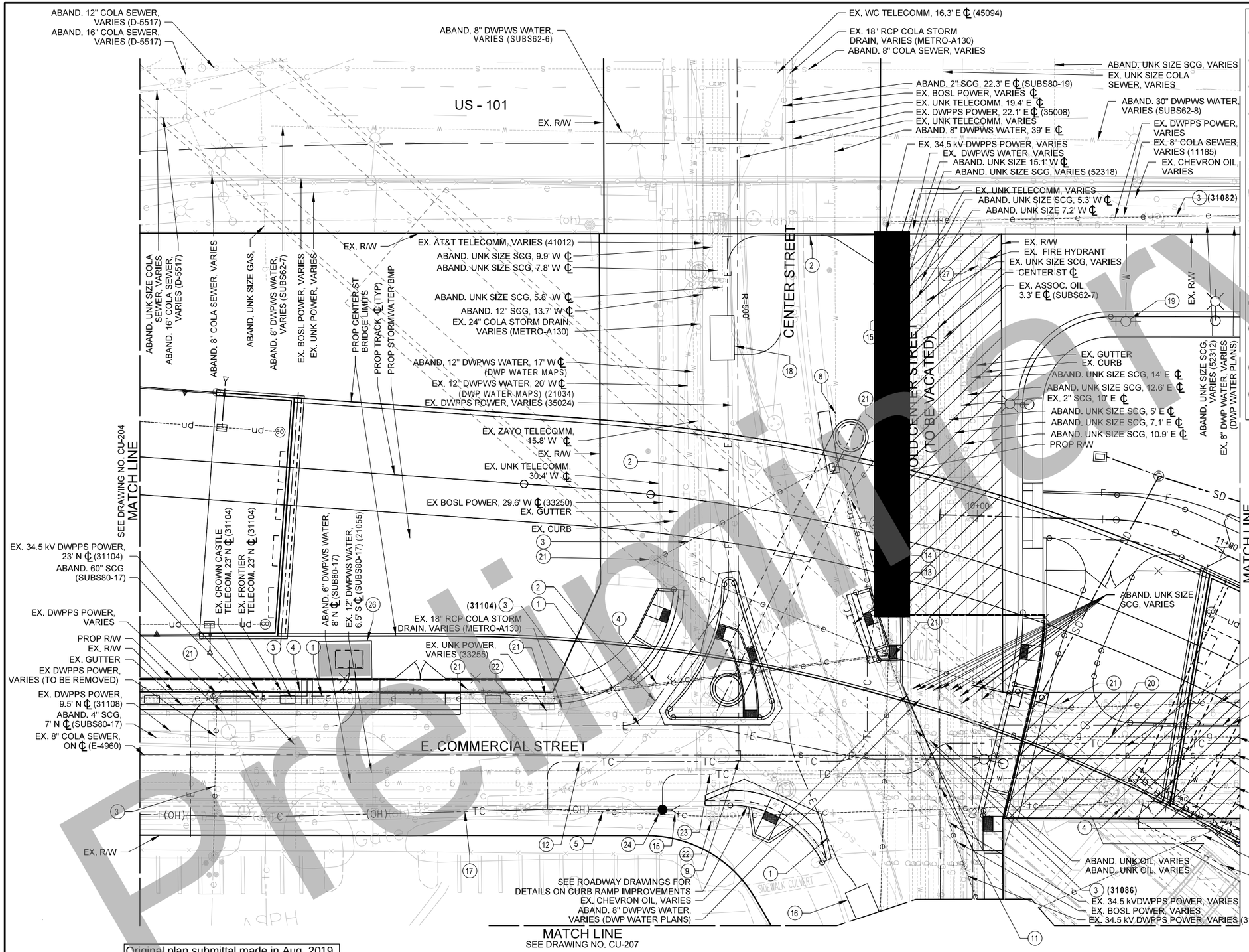

CONSTRUCTION NOTES

1. PROPOSED 34.5 KV UNDERGROUND POWER - BY UTILITY OWNER
2. PROPOSED 4.8 KV UNDERGROUND POWER - BY UTILITY OWNER
3. REMOVE POWER - BY UTILITY OWNER
4. REMOVE TELECOM - BY UTILITY OWNER
5. REMOVE OH TELECOM EAST OF POLE - BY UTILITY OWNER
6. REMOVE 8" GAS - BY UTILITY OWNER
7. ABANDON/REMOVE 8" SEWER - BY CONTRACTOR
8. ABANDON/REMOVE 8" WATER - BY CONTRACTOR
9. CUT & PLUG 8" SEWER - BY CONTRACTOR
10. PROPOSED 8" GAS - BY UTILITY OWNER
11. CUT & PLUG 6" WATER - BY CONTRACTOR
12. PROPOSED CROWN CASTLE, EDISON & FRONTIER JOINT TRENCH - BY UTILITY OWNERS
13. PROPOSED FRONTIER AND EDISON TELECOM - BY UTILITY OWNER
14. PROPOSED CROWN CASTLE TELECOM - BY UTILTY OWNER
15. PROPOSED DOWN GUY AND ANCHOR - BY UTILITY OWNER
16. PROPOSED 34.5 KV VAULT- BY UTILITY OWNER
17. PROPOSED OVERHEAD FRONTIER, SCE AND CROWN CASTLE TELECOM -BY UTILITY OWNER
18. PROPOSED 4.8 KV VAULT- BY UTILITY OWNER
19. PROPOSED FIRE HYDRANT- BY CONTRACTOR
20. ABANDON 8" GAS - BY UTILITY OWNER
21. REMOVE POWER POLES - BY UTILITY OWNER
22. REMOVE TELECOM POLES - BY UTILITY OWNER
23. PROPOSED AT&T TELECOM - BY UTILITY OWNER
24. PROPOSED AT&T POLE - BY UTILITY OWNER
25. PROPOSED 12" CASING - BY UTILITY OWNER
26. PROPOSED METRO/DWP LINE SWITCH - BY UTILITY OWNER
27. REMOVE EXISTING FIRE HYDRANT- BY CONTRACTOR

NOTES:

1. SEE TRACK PLANS FOR DETAILS ON PROPOSED SCRRA TRACKS SHOWN HEREIN.
2. SEE ROADWAY PLANS FOR DETAILS ON PROPOSED LOCAL STREET MODIFICATIONS AND REMOVALS.
3. SEE OFFSITE STRUCTURES PLANS FOR DETAILS ON PROPOSED BRIDGES, RETAINING WALLS, AND STORM DRAIN PROTECTION SLAB.
4. SEE DRAINAGE PLANS FOR DRAINAGE RELATED WORK.
5. EXISTING TELECOM SERVICE TO AMAY'S PROPERTY VIA OVERHEAD AT&T LINE ALONG COMMERCIAL STREET TO BE PERMANENTLY REMOVED. NEW TELECOM SERVICE TO BE PROVIDED VIA UNDERGROUND DUCT BANK ALONG COMMERCIAL ST.
6. PRESERVE EXISTING 8-INCH WATER MAIN IN OLD CENTER AND ALISO STREETS AS PUBLIC MAIN WITH EASEMENT OR PIPE LICENSE AGREEMENT FOR THE PORTIONS WITHIN METRO'S PROPERTY. DWP TO OBTAIN RELEASE OF LIABILITY FROM METRO FOR PIPELINE WITHIN METRO'S PROPERTY.
7. RELOCATION DESIGNS OF THIRD PARTY OWNED UTILITIES SHOWN ARE SUBJECT TO CHANGE PENDING ONGOING DESIGN ADVANCEMENT BY OWNERS.

35% DESIGN PLANS
NOT FOR CONSTRUCTION

Preliminary

Original plan submittal made in Aug. 2019

THE PREPARATION OF THIS DRAWING HAS BEEN FINANCED IN PART THROUGH A GRANT FROM THE U.S. DEPARTMENT OF TRANSPORTATION, FEDERAL TRANSIT ADMINISTRATION (FTA), UNDER THE FEDERAL TRANSIT ACT OF 1964, AS AMENDED, AND IN PART BY THE TAXES OF THE CITIZENS OF LOS ANGELES COUNTY AND OF THE STATE OF CALIFORNIA.

Rev No.	Date	Description
1	3/21	Updated to reflect latest third party relocation concepts and Amay's property preservation
2	12/21	
3	6/22	Updated third party relocation concepts and Amay's access road shown

DESIGNED BY M.AGUILAR
DRAWN BY M.AGUILAR
CHECKED BY I.ALTARES
IN CHARGE T.KIM
DATE 6/01/2022

REGISTERED PROFESSIONAL ENGINEER No. Exp. CIVIL STATE OF CALIFORNIA

Metro
LOS ANGELES COUNTY METROPOLITAN TRANSPORTATION AUTHORITY

BA INC (1966-2006 MBE) TRUE ENGINEERING EXCELLENCE
HDR ENGINEERING 350 S. GRAND AVENUE SUITE 1400 LOS ANGELES, CA 90071 (213) 236-5800

SUBMITTED: _____ PROJECT MANAGER
APPROVED: _____

LINK UNION STATION PROJECT
UTILITIES
UTILITY RELOCATION PLANS
SHEET 5 OF 9

CONTRACT NO
DRAWING NO CU-205
REV
SCALE 1"=20'
SHEET NO 137

Plot Driver=$PLTDRV$$ Pentable=PlotStamp.tbl USER = maguilar 5/25/2022 3:15:26 PM $FILE$

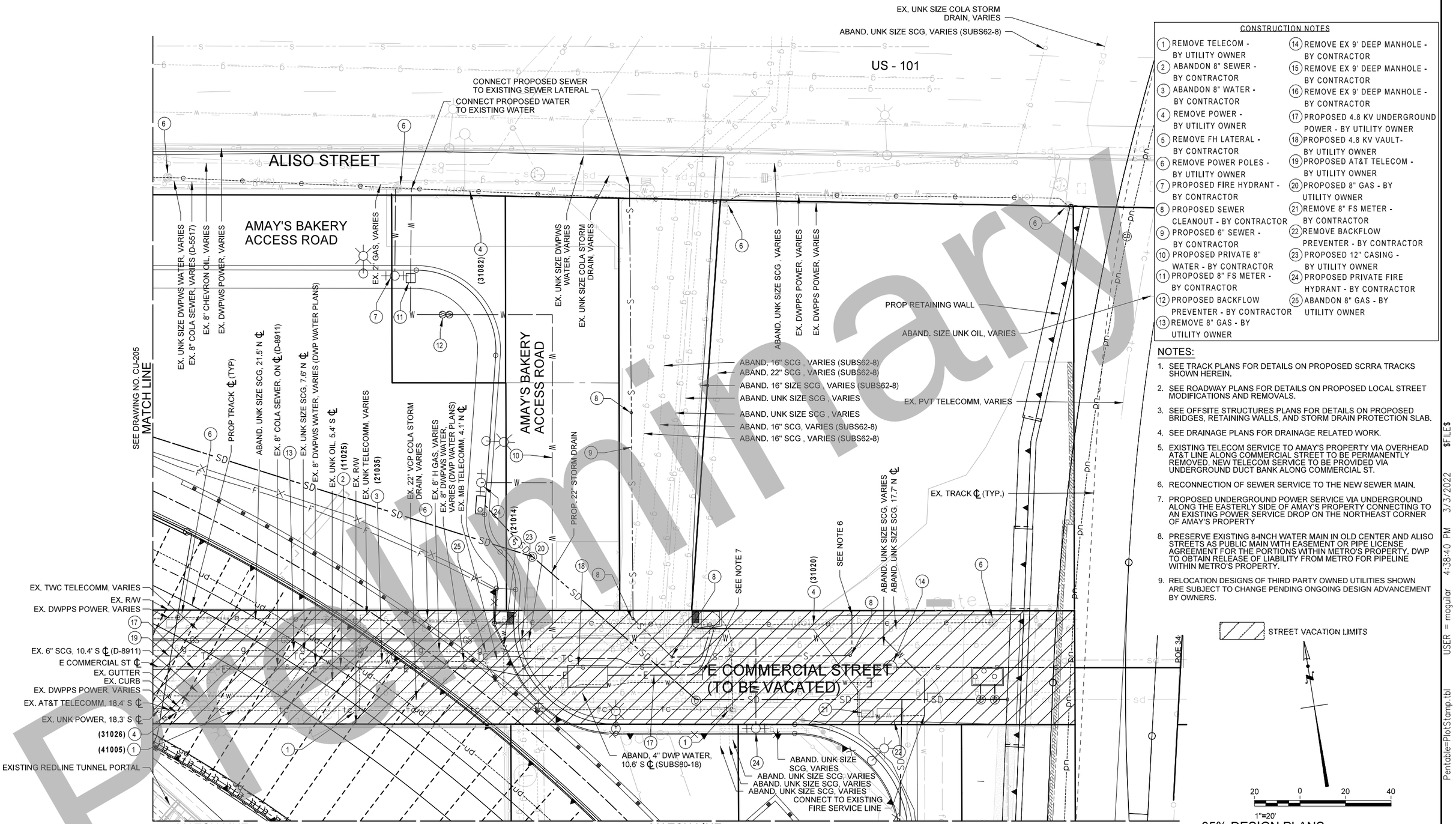

CONSTRUCTION NOTES

1. REMOVE TELECOM - BY UTILITY OWNER
2. ABANDON 8" SEWER - BY CONTRACTOR
3. ABANDON 8" WATER - BY CONTRACTOR
4. REMOVE POWER - BY UTILITY OWNER
5. REMOVE FH LATERAL - BY CONTRACTOR
6. REMOVE POWER POLES - BY UTILITY OWNER
7. PROPOSED FIRE HYDRANT - BY CONTRACTOR
8. PROPOSED SEWER CLEANOUT - BY CONTRACTOR
9. PROPOSED 6" SEWER - BY CONTRACTOR
10. PROPOSED PRIVATE 8" WATER - BY CONTRACTOR
11. PROPOSED 8" FS METER - BY CONTRACTOR
12. PROPOSED BACKFLOW PREVENTER - BY CONTRACTOR
13. REMOVE 8" GAS - BY UTILITY OWNER
14. REMOVE EX 9' DEEP MANHOLE - BY CONTRACTOR
15. REMOVE EX 9' DEEP MANHOLE - BY CONTRACTOR
16. REMOVE EX 9' DEEP MANHOLE - BY CONTRACTOR
17. PROPOSED 4.8 KV UNDERGROUND POWER - BY UTILITY OWNER
18. PROPOSED 4.8 KV VAULT- BY UTILITY OWNER
19. PROPOSED AT&T TELECOM - BY UTILITY OWNER
20. PROPOSED 8" GAS - BY UTILITY OWNER
21. REMOVE 8" FS METER - BY CONTRACTOR
22. REMOVE BACKFLOW PREVENTER - BY CONTRACTOR
23. PROPOSED 12" CASING - BY UTILITY OWNER
24. PROPOSED PRIVATE FIRE HYDRANT - BY CONTRACTOR
25. ABANDON 8" GAS - BY UTILITY OWNER

NOTES:

1. SEE TRACK PLANS FOR DETAILS ON PROPOSED SCRRA TRACKS SHOWN HEREIN.
2. SEE ROADWAY PLANS FOR DETAILS ON PROPOSED LOCAL STREET MODIFICATIONS AND REMOVALS.
3. SEE OFFSITE STRUCTURES PLANS FOR DETAILS ON PROPOSED BRIDGES, RETAINING WALLS, AND STORM DRAIN PROTECTION SLAB.
4. SEE DRAINAGE PLANS FOR DRAINAGE RELATED WORK.
5. EXISTING TELECOM SERVICE TO AMAY'S PROPERTY VIA OVERHEAD AT&T LINE ALONG COMMERCIAL STREET TO BE PERMANENTLY REMOVED. NEW TELECOM SERVICE TO BE PROVIDED VIA UNDERGROUND DUCT BANK ALONG COMMERCIAL ST.
6. RECONNECTION OF SEWER SERVICE TO THE NEW SEWER MAIN.
7. PROPOSED UNDERGROUND POWER SERVICE VIA UNDERGROUND ALONG THE EASTERLY SIDE OF AMAY'S PROPERTY CONNECTING TO AN EXISTING POWER SERVICE DROP ON THE NORTHEAST CORNER OF AMAY'S PROPERTY
8. PRESERVE EXISTING 8-INCH WATER MAIN IN OLD CENTER AND ALISO STREETS AS PUBLIC MAIN WITH EASEMENT OR PIPE LICENSE AGREEMENT FOR THE PORTIONS WITHIN METRO'S PROPERTY. DWP TO OBTAIN RELEASE OF LIABILITY FROM METRO FOR PIPELINE WITHIN METRO'S PROPERTY.
9. RELOCATION DESIGNS OF THIRD PARTY OWNED UTILITIES SHOWN ARE SUBJECT TO CHANGE PENDING ONGOING DESIGN ADVANCEMENT BY OWNERS.

35% DESIGN PLANS
NOT FOR CONSTRUCTION

Preliminary

Original plan submittal made in Aug. 2019

Rev No.	Date	Description
1	3/21	Updated to reflect preservation of Amay's property
2	12/21	
3	6/22	Updated third party relocation/Amay's property service concepts and Amay's access road shown

THE PREPARATION OF THIS DRAWING HAS BEEN FINANCED IN PART THROUGH A GRANT FROM THE U.S. DEPARTMENT OF TRANSPORTATION, FEDERAL TRANSIT ADMINISTRATION (FTA), UNDER THE FEDERAL TRANSIT ACT OF 1964, AS AMENDED, AND IN PART BY THE TAXES OF THE CITIZENS OF LOS ANGELES COUNTY AND OF THE STATE OF CALIFORNIA.

DESIGNED BY M.AGUILAR
DRAWN BY M.AGUILAR
CHECKED BY I.ALTARES
IN CHARGE T.KIM
DATE

REGISTERED PROFESSIONAL ENGINEER — No. — Exp. — CIVIL — STATE OF CALIFORNIA

Metro
LOS ANGELES COUNTY METROPOLITAN TRANSPORTATION AUTHORITY

BA INC — TRUE ENGINEERING EXCELLENCE
HDR ENGINEERING, 350 S. GRAND AVENUE SUITE 2000, LOS ANGELES, CA 90071, (213) 228-5800

SUBMITTED: _____ PROJECT MANAGER
APPROVED: _____

LINK UNION STATION PROJECT
UTILITIES
UTILITY RELOCATION PLANS
SHEET 6 OF 9

CONTRACT NO
DRAWING NO CU-206
REV
SCALE 1"=20'
SHEET NO 138

Plot Driver=$PLTDRVS$ Pentable=PlotStamp.tbl USER = magular 4:38:40 PM 3/3/2022 $FILE$

CONSTRUCTION NOTES

1. PROPOSED 34.5 KV VAULT - BY UTILITY OWNER
2. PROPOSED UNDERGROUND 34.5 KV POWER - BY UTILITY OWNER
3. REMOVE OVERHEAD POWER - BY UTILITY OWNER
4. PROPOSED 8" GAS - BY UTILITY OWNER
5. CONTRACTOR TO REESTABLISH POWER TO THE STREET LIGHT

NOTES:

1. RELOCATION DESIGNS OF THIRD PARTY OWNED UTILITIES SHOWN ARE SUBJECT TO CHANGE PENDING ONGOING DESIGN ADVANCEMENT BY OWNERS.

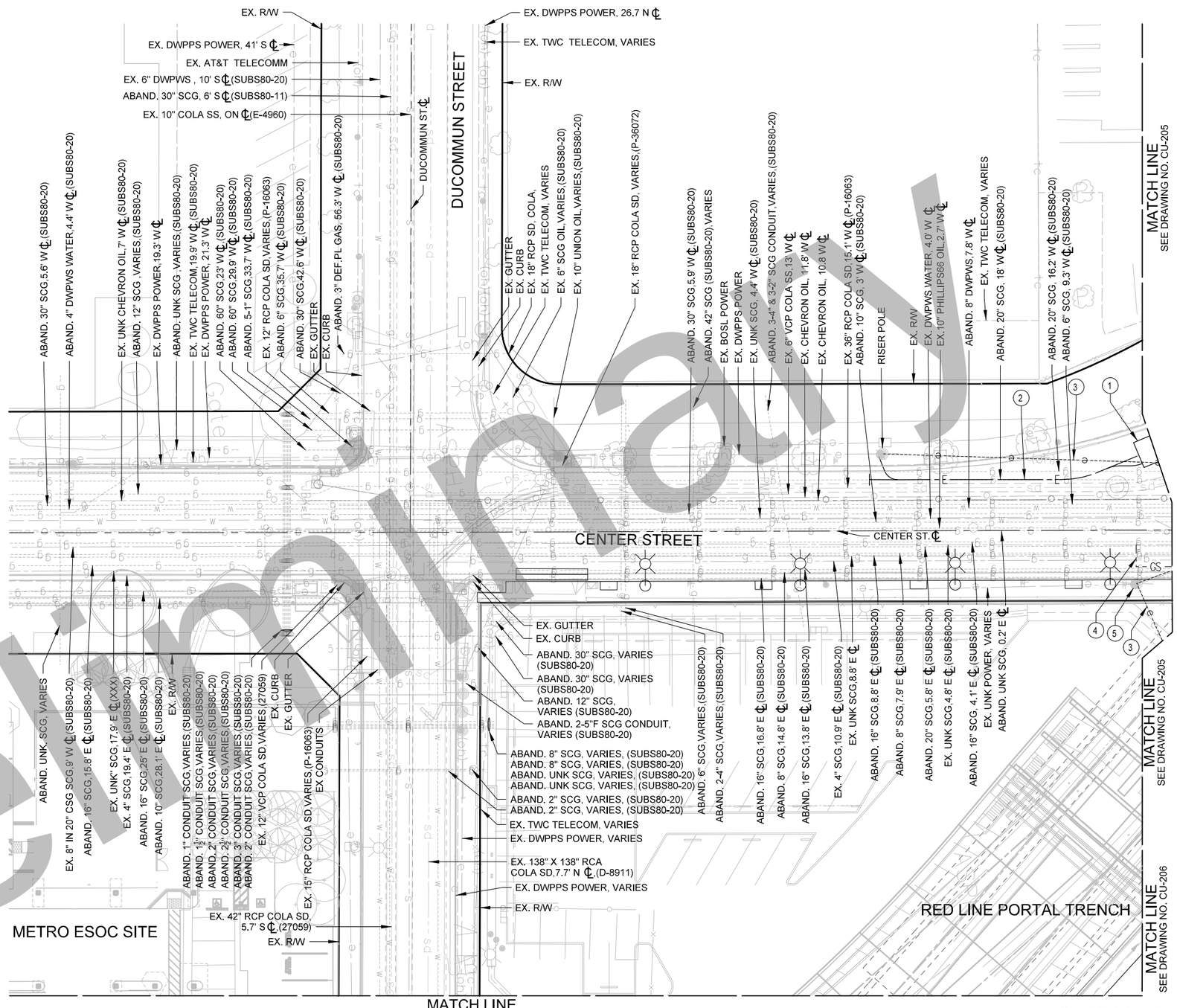

Original plan submittal made in Aug. 2019

THE PREPARATION OF THIS DRAWING HAS BEEN FINANCED IN PART THROUGH A GRANT FROM THE U.S. DEPARTMENT OF TRANSPORTATION, FEDERAL TRANSIT ADMINISTRATION (FTA), UNDER THE FEDERAL TRANSIT ACT OF 1964, AS AMENDED, AND IN PART BY THE TAXES OF THE CITIZENS OF LOS ANGELES COUNTY AND OF THE STATE OF CALIFORNIA.

Rev No.	Date	Description
1	3/21	
2	12/21	
3	6/22	

DESIGNED BY M.AGUILAR
DRAWN BY M.AGUILAR
CHECKED BY I.ALTARES
IN CHARGE T.KIM
DATE 8/01/2019

REGISTERED PROFESSIONAL ENGINEER No. Exp. CIVIL STATE OF CALIFORNIA

Metro
LOS ANGELES COUNTY
METROPOLITAN TRANSPORTATION AUTHORITY

BA INC TRUE ENGINEERING EXCELLENCE

HDR ENGINEERING 350 S. GRAND AVENUE SUITE 2000 LOS ANGELES, CA 90071 (213) 236-5800

SUBMITTED: _____ PROJECT MANAGER

APPROVED: _____

LINK UNION STATION PROJECT
UTILITIES
UTILITY RELOCATION PLANS
SHEET 7 OF 9

CONTRACT NO
DRAWING NO CU-207
REV
SCALE 1"=20'
SHEET NO 139

35% DESIGN PLANS
NOT FOR CONSTRUCTION

Preliminary

Plot Driver=$PLTDRVS$ Pentable=PlotStamp.tbl USER = mogular 1:49:23 PM 2/25/2022 $FILE$

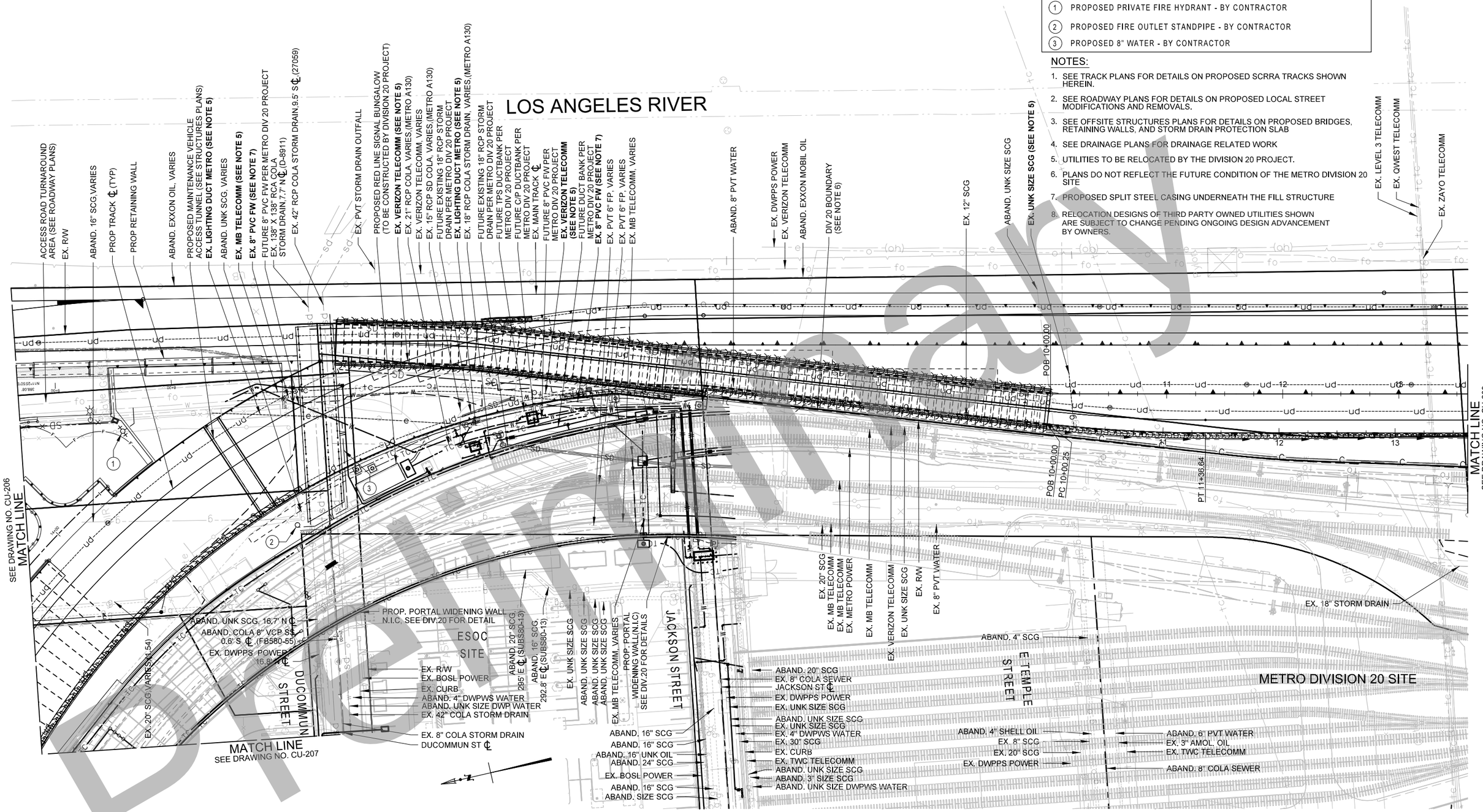

CONSTRUCTION NOTES

1. PROPOSED PRIVATE FIRE HYDRANT - BY CONTRACTOR
2. PROPOSED FIRE OUTLET STANDPIPE - BY CONTRACTOR
3. PROPOSED 8" WATER - BY CONTRACTOR

NOTES:

1. SEE TRACK PLANS FOR DETAILS ON PROPOSED SCRRA TRACKS SHOWN HEREIN.
2. SEE ROADWAY PLANS FOR DETAILS ON PROPOSED LOCAL STREET MODIFICATIONS AND REMOVALS.
3. SEE OFFSITE STRUCTURES PLANS FOR DETAILS ON PROPOSED BRIDGES, RETAINING WALLS, AND STORM DRAIN PROTECTION SLAB
4. SEE DRAINAGE PLANS FOR DRAINAGE RELATED WORK
5. UTILITIES TO BE RELOCATED BY THE DIVISION 20 PROJECT.
6. PLANS DO NOT REFLECT THE FUTURE CONDITION OF THE METRO DIVISION 20 SITE
7. PROPOSED SPLIT STEEL CASING UNDERNEATH THE FILL STRUCTURE
8. RELOCATION DESIGNS OF THIRD PARTY OWNED UTILITIES SHOWN ARE SUBJECT TO CHANGE PENDING ONGOING DESIGN ADVANCEMENT BY OWNERS.

Preliminary

Original plan submittal made in Aug. 2019

35% DESIGN PLANS
NOT FOR CONSTRUCTION

Rev No.	Date	Description
1	3/21	Updated to show new utilities and Red Line signal bunglow to be constructed as part of Metro Div 20 Project
2	12/21	
3	6/22	Updated to reflect modified Metro Div 20 access road design

THE PREPARATION OF THIS DRAWING HAS BEEN FINANCED IN PART THROUGH A GRANT FROM THE U.S. DEPARTMENT OF TRANSPORTATION, FEDERAL TRANSIT ADMINISTRATION (FTA), UNDER THE FEDERAL TRANSIT ACT OF 1964, AS AMENDED, AND IN PART BY THE TAXES OF THE CITIZENS OF LOS ANGELES COUNTY AND OF THE STATE OF CALIFORNIA.

DESIGNED BY M.AGUILAR
DRAWN BY M.AGUILAR
CHECKED BY I.ALTARES
IN CHARGE T.KIM
DATE

REGISTERED PROFESSIONAL ENGINEER — No. Exp. CIVIL — STATE OF CALIFORNIA

Metro
LOS ANGELES COUNTY
METROPOLITAN TRANSPORTATION AUTHORITY

BA Inc — TRUE ENGINEERING EXCELLENCE
HDR ENGINEERING, 300 S. GRAND AVENUE SUITE 1000, LOS ANGELES, CA 90071, (213) 236-5800

SUBMITTED: _____ PROJECT MANAGER
APPROVED: _____

LINK UNION STATION PROJECT
UTILITIES
UTILITY RELOCATION PLANS
SHEET 8 OF 9

CONTRACT NO
DRAWING NO CU-208 REV
SCALE 1"=40'
SHEET NO 140

Plot Driver=$PLTDRVS$ Pentable=PlotStamp.tbl USER = mgular 2/25/2022 2:33:57 PM $FILE$

NO RELOCATIONS ON THIS SHEET

NOTES:

1. SEE TRACK PLANS FOR DETAILS ON PROPOSED SCRRA TRACKS SHOWN HEREIN.
2. SEE ROADWAY PLANS FOR DETAILS ON PROPOSED LOCAL STREET MODIFICATIONS AND REMOVALS.
3. SEE OFFSITE STRUCTURES PLANS FOR DETAILS ON PROPOSED BRIDGES, RETAINING WALLS, AND STORM DRAIN PROTECTION SLAB
4. SEE DRAINAGE PLANS FOR DRAINAGE RELATED WORK
5. PLANS DO NOT REFLECT THE FUTURE CONDITION OF THE METRO DIVISION 20 SITE

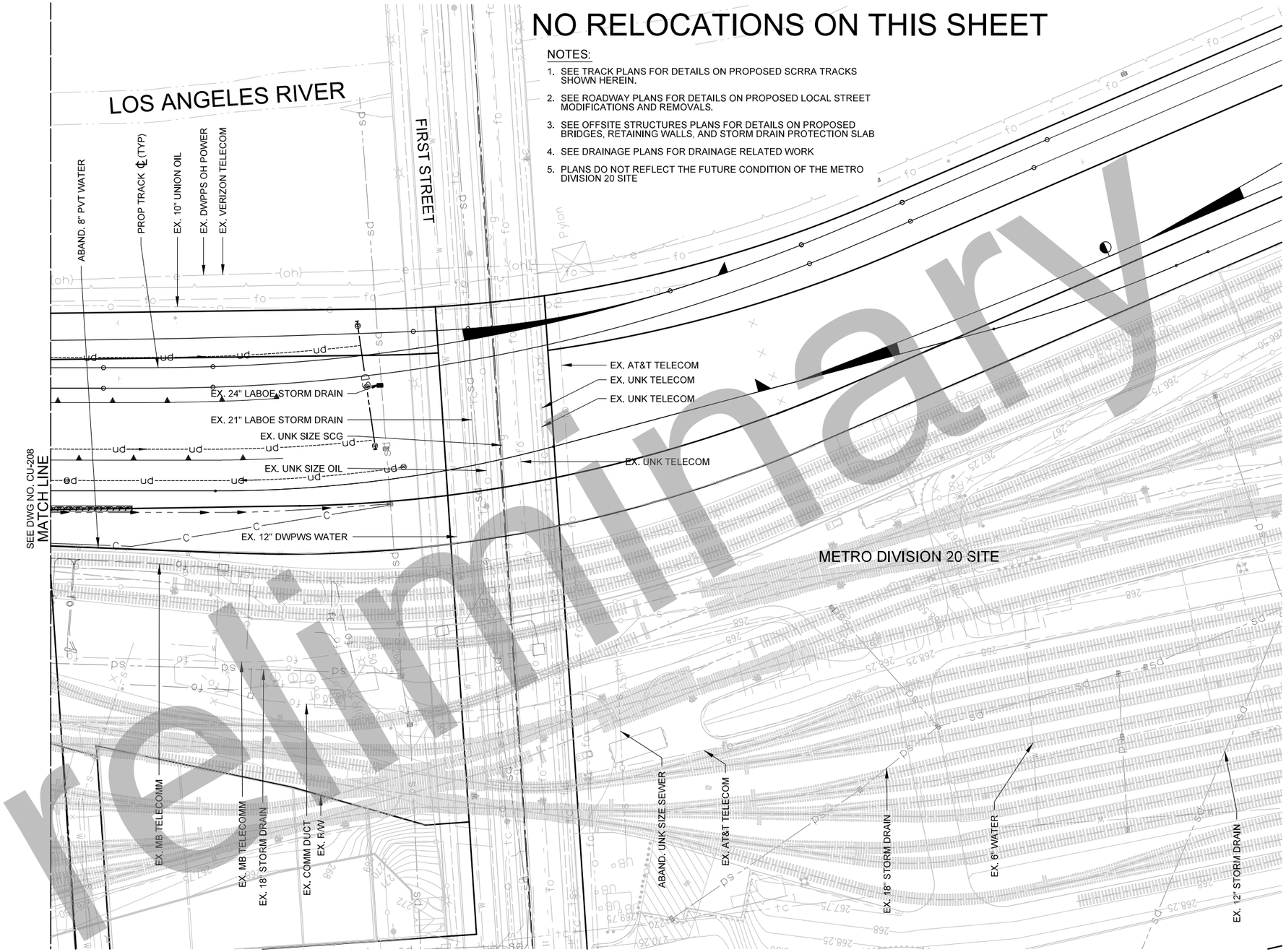

35% DESIGN PLANS
NOT FOR CONSTRUCTION

Original plan submittal made in Aug. 2019

THE PREPARATION OF THIS DRAWING HAS BEEN FINANCED IN PART THROUGH A GRANT FROM THE U.S. DEPARTMENT OF TRANSPORTATION, FEDERAL TRANSIT ADMINISTRATION (FTA), UNDER THE FEDERAL TRANSIT ACT OF 1964, AS AMENDED, AND IN PART BY THE TAXES OF THE CITIZENS OF LOS ANGELES COUNTY AND OF THE STATE OF CALIFORNIA.

Rev No.	Date	Description
1	3/21	
2	12/21	
3	6/22	

DESIGNED BY M.AGUILAR
DRAWN BY M.AGUILAR
CHECKED BY I.ALTARES
IN CHARGE T.KIM
DATE 8/01/2019

REGISTERED PROFESSIONAL ENGINEER — No. — Exp. — CIVIL — STATE OF CALIFORNIA

Metro
LOS ANGELES COUNTY
METROPOLITAN TRANSPORTATION AUTHORITY

BA INC (SBE/DBE/MBE) TRUE ENGINEERING EXCELLENCE

HDR ENGINEERING
350 S. GRAND AVENUE
SUITE 2600
LOS ANGELES, CA 90071
(213) 236-2800

SUBMITTED: _____ PROJECT MANAGER

APPROVED: _____

LINK UNION STATION PROJECT

UTILITIES
UTILITY RELOCATION PLANS
SHEET 9 OF 9

CONTRACT NO
DRAWING NO CU-209
REV
SCALE 1"=40'
SHEET NO 141

Preliminary

Plot Driver=$PLTDRV$ Pentable=PlotStamp.tbl USER = maguilar 11:28:26 AM 2/23/2022 $FILE$

TRENCH ID NUMBER	STREET	UTILITY TYPE	Utility Size and Material	DEPTH-GROUND TO TOP OF UTILITY	DEPTH-GROUND TO TOP OF ENCASEMENT	DEPTH-GROUND TO BOTTOM OF ENCASEMENT
TR-9 UTI 50	CENTER ST	EAST END OF TRENCH 9	N/A	N/A	N/A	N/A
TR-9 UTI 50	CENTER ST	UNKNOWN	16.0" STEEL	19.0" T/P	N/A	N/A
TR-9 UTI 51	CENTER ST	UNKNOWN	8.0" STEEL	26.0" T/P	N/A	N/A
TR-9 UTI 52	CENTER ST	UNKNOWN	4.0" STEEL	20.5" T/P	N/A	N/A
TR-9 UTI 52	CENTER ST	UNKNOWN	16.0" STEEL	47.0" T/P	N/A	N/A
TR-9 UTI 53	CENTER ST	SLURRY CAP	EAST EDGE OF SLURRY	10.0" T/SLURRY 33.0" B/SLURRY	N/A	N/A
TR-9 UTI 54	CENTER ST	GAS	4.0" PLASTIC	46.0" T/P	N/A	N/A
TR-9 UTI 55	CENTER ST	SLURRY CAP	WEST ED OF SLURRY	10.0" T/SLURRY 33.0" B/SLURRY	N/A	N/A
TR-9 UTI 56	CENTER ST	UNKNOWN	4.0" STEEL	19.5" T/P	N/A	N/A
TR-9 UTI 56	CENTER ST	UNKNOWN	18.0" STEEL	57.5" T/P	N/A	N/A
TR-9 UTI 57	CENTER ST	UNKNOWN	EAST EDGE OF SLURRY ENCASEMENT	N/A	10.0" T/E	33.0" B/E
TR-4 UTI 1	CENTER ST	UNKNOWN	50" ENCASEMENT	N/A	7.0"	57.0"
TR-4 UTI 2	CENTER ST	UNKNOWN	20" STEEL	38.0" T/P	N/A	N/A
TR-4 UTI 3	CENTER ST	UNKNOWN	8.0" STEEL	39.0" T/P	N/A	N/A
TR-4 UTI 4	CENTER ST	UNKNOWN	UNKNOWN	N/A	N/A	N/A
TR-4 UTI 5	CENTER ST	WATER	12" STEEL	46.0" T/P	N/A	N/A
TR-4 UTI 6	CENTER ST	CENTER OF STREET	N/A	N/A	N/A	N/A
TR-4 UTI 7	CENTER ST	UNKNOWN	31.0" T/P	N/A	N/A	N/A
TR-4 UTI 8	CENTER ST	ELECTRIC	SOUTH SIDE OF CONCRETE ENCASEMENT	N/A	12.5" T/E	97.0" B/E
TR-4 BETWEEN UTI 8 & 9	CENTER ST	ELECTRIC	NORTH SIDE OF CONCRETE ENCASEMENT	N/A	12.5" T/E	97.0" B/E
TR-4 UTI 9	CENTER ST	UNKNOWN	20.0" CONCRETE	80.0" T/P	N/A	N/A
TR-4 BETWEEN UTI 9 & 10	CENTER ST	CONCRETE CAP	SOUTH SIDE OF CONCRETE	16.0" T/C & 31.0" B/E	N/A	N/A
TR-4 UTI 10	CENTER ST	GAS	4.0" PLASTIC	41.0" T/P	N/A	N/A
TR-4 UTI 10	CENTER ST	UNKNOWN	CONCRETE BOX	54.5" T/BOX & 73.5" B/BOX	N/A	N/A
TR-4 UTI 11	CENTER ST	CONCRETE CAP	NORTH SIDE OF CONCRETE	16.0" T/C & 31.0" B/E	N/A	N/A
TR-4 UTI 12	CENTER ST	STORM DRAIN	18.0" STEEL	35.0" T/P	N/A	N/A
TR-4 UTI 13	CENTER ST	UNKNOWN	ENCASEMENT	N/A	6.5" T/E	42.0" B/E
TR-4 UTI 14	CENTER ST	TRENCH 4 NORTH END	NA	N/A	N/A	N/A
TR-5 UTI 15	CENTER ST	TRENCH 5 WEST END	N/A	N/A	N/A	N/A
TR-5 UTI 16	CENTER ST	ATT-D	SLURRY ENCASEMENT	N/A	6.5" T/E	42.0" B/E
TR-5 UTI 17	CENTER ST	UNKNOWN	WEST SIDE OF SLURRY ENCASEMENT	N/A	23.0"	86.0" B/E
TR-5 UTI 18	CENTER ST	UNKNOWN	EAST SIDE OF SLURRY ENCASEMENT	N/A	23.0"	86.0" B/E
TR-5 UTI 19	CENTER ST	WATER	12.0" STEEL	51.5" T/P	N/A	N/A
TR-5 UTI 20	CENTER ST	WEST SIDE OF CROSSWALK	N/A	N/A	N/A	N/A
TR-5 UTI 21	CENTER ST	EAST SIDE OF CROSSWALK	N/A	N/A	N/A	N/A
TR-5 UTI 22	CENTER ST	CONCRETE BASE POLE	2.0" STEEL PIPE (PROTRUDING OUT OF CONCRETE BASE)	6.5" T/P	N/A	N/A
TR-5 UTI 23	CENTER ST	ELECTRIC	WEST SIDE OF SLURRY ENCASEMENT	N/A	10.0" T/E	89.0" B/E
TR-5 UTI 24	CENTER ST	ELECTRIC	EAST SIDE OF SLURRY ENCASEMENT	N/A	10.0" T/E	89.0" B/E
TR-5 UTI 25	CENTER ST	UNKNOWN	WEST SIDE OF SLURRY ENCASEMENT	N/A	12.0" T/E	78.5" B/E
TR-5 UTI 26	CENTER ST	UNKNOWN	EAST SIDE OF SLURRY ENCASEMENT	N/A	12.0" T/E	78.5" B/E
TR-5/6 UTI 27	CENTER ST	N/A	END OF TRENCH 5/START OF TRENCH 6	N/A	N/A	N/A
TR 6 BETWEEN UTI 27 & 28	CENTER ST	CONCRETE BASE POLE	1.0" PVC (PROTRUDING OUT OF CONCRETE BASE)	6.0" T/P	N/A	N/A
TR-6 UTI 28	CENTER ST	UNKNOWN	3.0" STEEL	41.0" T/P	N/A	N/A
TR-6 UTI 29	CENTER ST	UNKNOWN	8.0" STEEL	55.5" T/P	N/A	N/A
TR-6 BETWEEN UTI 29 & 30	CENTER ST	UNKNOWN	WEST EDGE OF SLURRY CAP	N/A	15.0" T/CAP	30.0" B/CAP
TR-6 BETWEEN UTI 29 & 30	CENTER ST	UNKNOWN	EAST EDGE OF SLURRY CAP	N/A	15.0" T/CAP	30.0" B/CAP
TR-6 UTI 30	CENTER ST	SLURRY	TOP OF SLURRY	45.0" T/SLURRY	N/A	N/A
TR-6 BETWEEN UTI 30 & 31	CENTER ST	UNKNOWN	18.0" STEEL	51.0" T/P	N/A	N/A
TR-6 UTI 31	CENTER ST	UNKNOWN	10.0" STEEL	42.0" T/P	N/A	N/A
TR-6 UTI 32	CENTER ST	UNKNOWN	6.0" STEEL	45.0" T/P	N/A	N/A
TR-6 UTI 33	CENTER ST	UNKNOWN	6.0" STEEL	46.5" T/P	N/A	N/A
TR-6 BETWEEN UTI 33 & 34	CENTER ST	UNKNOWN	30.0" STEEL	88.0" T/P	N/A	N/A

TRENCH ID NUMBER	STREET	UTILITY TYPE	Utility Size and Material	DEPTH-GROUND TO TOP OF UTILITY	DEPTH-GROUND TO TOP OF ENCASEMENT	DEPTH-GROUND TO BOTTOM OF ENCASEMENT
TR-8 BETWEEN UTI 33 & 34	CENTER ST	UNKNOWN	8.0" STEEL	36.5" T/P	N/A	N/A
TR-8 UTI 34	CENTER ST	UNKNOWN	18.0" STEEL	61.0" T/P	N/A	N/A
TR-8 UTI 35	CENTER ST	UNKNOWN	30.0" STEEL	30.0" T/P	N/A	N/A
TR-8 UTI 35	CENTER ST	UNKNOWN	2.0" STEEL	65.5" T/P	N/A	N/A
TR-8 UTI 36	CENTER ST	UNKNOWN	10.0" STEEL	56.5" T/P	N/A	N/A
TR-8 UTI 37	CENTER ST	UNKNOWN	WEST SIDE OF SLURRY ENCASEMENT	N/A	8.5" T/E	52.5" B/E
TR-8 6" WEST OF UTI 38	CENTER ST	UNKNOWN	EAST SIDE OF SLURRY ENCASEMENT	N/A	8.5" T/E	52.5" B/E
TR-8 6" WEST OF UTI 38	CENTER ST	UNKNOWN	6.0" PLASTIC	46.5" T/P	N/A	N/A
TR-8 UTI 37	CENTER ST	UNKNOWN	WEST SIDE OF SLURRY ENCASEMENT	N/A	8.5" T/E	52.5" B/E
TR-8 6" WEST OF UTI 38	CENTER ST	UNKNOWN	EAST SIDE OF SLURRY ENCASEMENT	N/A	8.5" T/E	52.5" B/E
TR-8 6" WEST OF UTI 38	CENTER ST	UNKNOWN	6.0" PLASTIC	46.5" T/P	N/A	N/A
TR-8 UTI 39	CENTER ST	UNKNOWN	4.0" STEEL	19.5" T/P	N/A	N/A
TR-8 UTI 40	CENTER ST	UNKNOWN	10.0" STEEL	27.0" T/P	N/A	N/A
TR-8 UTI 40	CENTER ST	UNKNOWN	16.0" STEEL	26.5" T/P	N/A	N/A
TR-8 UTI 41	CENTER ST	EAST END OF TR 6	NA	NA	N/A	N/A
TR-8 UTI 42	E COMMERCIAL ST	NORTH END OF TR 6	NA	NA	N/A	N/A
TR-8 UTI 43	E COMMERCIAL ST	GAS (HP)	NORTH SIDE OF SLURRY ENCASEMENT	NA	10.0" T/E	73.0" B/E
TR-8 UTI 44	E COMMERCIAL ST	GAS (HP)	SOUTH SIDE OF SLURRY ENCASEMENT	NA	10.0" T/E	73.0" B/E
TR-8 UTI 45	E COMMERCIAL ST	NA	NORTH SIDE OF SLURRY	96.0" T/SLURRY	N/A	N/A
TR-8 BETWEEN UTI 45 & 46	E COMMERCIAL ST	NA	SOUTH SIDE OF SLURRY	96.0" T/SLURRY	NA	NA
TR-8 UTI 46	E COMMERCIAL ST	WATER	NORTH SIDE OF SLURRY ENCASEMENT	NA	12.5" T/E	60.0" B/E
TR-8 UTI 47	E COMMERCIAL ST	WATER	SOUTH SIDE OF SLURRY ENCASEMENT	NA	12.5" T/E	60.0" B/E
TR-8 UTI 47	E COMMERCIAL ST	WATER (ABAND.)	NORTH SIDE OF CONCRETE ENCASEMENT	NA	23.0" T/E	51.0" B/E
TR-8 UTI 48	E COMMERCIAL ST	WATER (ABAND.)	SOUTH SIDE OF CONCRETE ENCASEMENT	NA	23.0" T/E	51.0" B/E
TR-8 UTI 48	E COMMERCIAL ST	WATER (ABAND.)	SOUTH SIDE OF CONCRETE ENCASEMENT	NA	23.0" T/E	51.0" B/E
TR-8 UTI 49	E COMMERCIAL ST	SOUTH END OF TR-8	NA	NA	23.0" T/E	51.0" B/E

NOTES:

1. EXISTING UTILITY PLANS HAVE NOT YET BEEN UPDATED TO REFLECT FINDINGS SHOWN IN TABLES. INFORMATION SHOWN IN EXISTING UTILITY PLANS IS BASED ON REVIEW OF AS-BUILT DRAWINGS AND FACILITY MAPS PROVIDED BY UTILITY OWNERS.

35% DESIGN PLANS
NOT FOR CONSTRUCTION

Original plan submittal made in Aug. 2019

THE PREPARATION OF THIS DRAWING HAS BEEN FINANCED IN PART THROUGH A GRANT FROM THE U.S. DEPARTMENT OF TRANSPORTATION, FEDERAL TRANSIT ADMINISTRATION (FTA), UNDER THE FEDERAL TRANSIT ACT OF 1964, AS AMENDED, AND IN PART BY THE TAXES OF THE CITIZENS OF LOS ANGELES COUNTY AND OF THE STATE OF CALIFORNIA.

Rev No.	Date	Description
1	3/21	
2	12/21	
3	6/22	

DESIGNED BY M.AGUILAR
DRAWN BY M.AGUILAR
CHECKED BY I.ALTARES
IN CHARGE T.KIM
DATE 8/01/2019

REGISTERED PROFESSIONAL ENGINEER — No. — EXP. — CIVIL — STATE OF CALIFORNIA

Metro
LOS ANGELES COUNTY
METROPOLITAN TRANSPORTATION AUTHORITY

BA INC (SBE/DBE/MBE) TRUE ENGINEERING EXCELLENCE
HDR ENGINEERING
350 S. GRAND AVENUE SUITE 2200 LOS ANGELES, CA 90071 (213) 233-5800

SUBMITTED: _____ PROJECT MANAGER
APPROVED: _____

LINK UNION STATION PROJECT
UTILITIES
TRENCH SUMMARY TABLE

CONTRACT NO
DRAWING NO CU-301
REV
SCALE NO SCALE
SHEET NO 142

Plot Driver=$PLTDRVS$ Pentable=PlotStamp.tbl USER = maguilar 9:50:09 AM 2/23/2022 $FILE$

LINK UNION STATION
EXISTING OFFSITE UTILITY IMPACT MATRIX
MARCH 2022

ITEM NO.	PLAN SHEET NO.	UTILITY ID	UTILITY OWNER	CATEGORY	SIZE & MATERIAL	DISPOSITION	RESPONSIBILITY
1	CU-201	47050 and 47045	VERIZON	TELECOMM	1-2" HDPE & MSF-36F	TO STAY IN PLACE	UTILITY OWNER
2	CU-206	21035	LADWPWS	WATER	8" STEEL/DI PIPE	TO BE REMOVED AT END OF E COMMERCIAL ST AND CUT AND CAP AT THE ALLEY	UTILITY OWNER
3	CU-205, CU-206	21014	LADWPWS	WATER	FIRE HYDRANT	TO BE REMOVED AND RELOCATED	CONTRACTOR
4	CU-205, CU-206	52314	SCG	GAS	8" HIGH-PRESSURE STEEL MAIN	TO BE RELOCATED AND EXISTING MAIN TO BE ABANDONED IN PLACE WITH INTERFERING PORTIONS TO BE REMOVED	UTILITY OWNER
5	CU-205, CU-206	31082	LADWPPS	POWER	OVERHEAD LINES	TO BE RELOCATED INTO UNDERGROUND DUCT BANK ON COMMERCIAL ST, AND REMOVE INTERFERING OVERHEAD AND POLES	UTILITY OWNER
6	CU-205, CU-206	41005	AT&T	TELECOMM	OVERHEAD LINES	TO BE RELOCATED INTO UNDERGROUND DUCT BANK ON COMMERCIAL ST, AND OVERHEAD LINES AND POLES TO BE REMOVED	UTILITY OWNER
7	CU-204, CU-205	UNK	WILCON/CROWN CASTLE	TELECOMM	OVERHEAD LINES	TO BE RELOCATED ONTO POLES ON THE SOUTHERLY OF COMMERCIAL ST AND TRANSITION TO UNDERGROUND JOINT TRENCH, AND REMOVE INTERFERING OVERHEAD AND POLES	UTILITY OWNER
8	CU-204, CU-205	UNK	FRONTIER	TELECOMM	OVERHEAD LINES	TO BE RELOCATED ONTO POLES ON THE SOUTHERLY OF COMMERCIAL ST AND TRANSITION TO UNDERGROUND JOINT TRENCH, AND REMOVE INTERFERING OVERHEAD AND POLES	UTILITY OWNER
9	CU-204, CU-205	UNK	SCE	TELECOMM	OVERHEAD LINES	TO BE RELOCATED ONTO POLES ON THE SOUTHERLY OF COMMERCIAL ST AND TRANSITION TO UNDERGROUND JOINT TRENCH, AND REMOVE INTERFERING OVERHEAD AND POLES	UTILITY OWNER
10	CU-205	31086, 31104	LADWPPS	POWER	OVERHEAD LINES	TO BE UNDERGROUND	UTILITY OWNER
11	CU-206	31020, 31026	LADWPPS	POWER	OVERHEAD LINES	TO BE REMOVED	UTILITY OWNER
12	CU-204	UNK	LADWPPS	POWER	OVERHEAD LINES	TO BE RELOCATED INTO UNDERGROUND DUCT BANK, AND REMOVE INTERFERING OVERHEAD AND POLES	UTILITY OWNER
13	CU-201	111012	LABOE	SEWER	10"	SEWER MH TO BE RELOCATED WITHIN PUBLIC RIGHT OF WAY AND ENCASEMENT TO BE EXTENDED	CONTRACTOR
14	CU-205, CU-206	11025	LABOE	SEWER	8" VCP	INTERFERING PORTIONS TO BE REMOVED AND CAP AT THE EXISTING MH CONNECTIONS. REPLACE SEWER SERVICE WITH PRIVATE 6" LATERAL	CONTRACTOR
15	CU-206	UNK	LABOE	SEWER	MANHOLE	TO BE REMOVED	CONTRACTOR
16	CU-204	31118	BOSL	STREET LIGHTING	UNK	TO BE RELOCATED AND EXISTING UTILITY TO BE REMOVED	CONTRACTOR
17	CU-206	UNK	LADWPWS	WATER	WATER METER	TO BE RELOCATED	CONTRACTOR
18	CU-205	UNK	METRO	WATER	BACKFLOW PREVENTER	TO BE RELOCATED	CONTRACTOR

Preliminary

35% DESIGN PLANS
NOT FOR CONSTRUCTION

Original plan submittal made in Aug. 2019

THE PREPARATION OF THIS DRAWING HAS BEEN FINANCED IN PART THROUGH A GRANT FROM THE U.S. DEPARTMENT OF TRANSPORTATION, FEDERAL TRANSIT ADMINISTRATION (FTA), UNDER THE FEDERAL TRANSIT ACT OF 1964, AS AMENDED, AND IN PART BY THE TAXES OF THE CITIZENS OF LOS ANGELES COUNTY AND OF THE STATE OF CALIFORNIA.

Rev No.	Date	Description
1	3/21	Conflict matrix updated to reflect design changes
2	12/21	
3	6/22	Conflict matrix updated to reflect design changes

DESIGNED BY M.AGUILAR
DRAWN BY M.AGUILAR
CHECKED BY I.ALTARES
IN CHARGE T.KIM
DATE 6/01/2022

REGISTERED PROFESSIONAL ENGINEER — No. Exp. — CIVIL — STATE OF CALIFORNIA

Metro
LOS ANGELES COUNTY METROPOLITAN TRANSPORTATION AUTHORITY
BA INC (MBE/DBE/WBE) TRUE ENGINEERING EXCELLENCE
HDR
HDR ENGINEERING 350 S. GRAND AVENUE SUITE 2500 LOS ANGELES, CA 90071 (213) 239-5800

SUBMITTED: _____ PROJECT MANAGER
APPROVED: _____

LINK UNION STATION PROJECT
UTILITIES
EXISTING UTILITY CONFLICT MATRIX

CONTRACT NO
DRAWING NO CU-302
REV
SCALE NO SCALE
SHEET NO 143

Plot Driver=$PLTDRVS$ Pentable=PlotStamp.tbl USER = maguilar 2:18:48 PM 2/25/2022 $FILE$

ID	UTILITY TYPE	SIZE	UTILITY LOCATION	AS-BUILT	DISPOSITION
1022	ELECTRICAL	UNKNOWN	GARDEN TRACK TO UNION STATION VILLAGE	SCRTD METRO RAIL PROJECT CONTRACT NO. A135	STAY IN PLACE
2001	AIR	1.5"	ALONG PASSAGEWAY	AMTRAK LAUS RUN THRU TRACKS 35% DESIGN PLANS	STAY IN PLACE
2002	AIR	1.5"	ALONG PASSAGEWAY	AMTRAK LAUS RUN THRU TRACKS 35% DESIGN PLANS	STAY IN PLACE
2003	AIR	1.5"	ALONG PASSAGEWAY	AMTRAK LAUS RUN THRU TRACKS 35% DESIGN PLANS	STAY IN PLACE
2004	AIR	1.5"	ALONG PASSAGEWAY	AMTRAK LAUS RUN THRU TRACKS 35% DESIGN PLANS	STAY IN PLACE
2005	AIR	1.5"	ALONG PASSAGEWAY	AMTRAK LAUS RUN THRU TRACKS 35% DESIGN PLANS	RELOCATE
2006	AIR	1.5"	ALONG PASSAGEWAY	AMTRAK LAUS RUN THRU TRACKS 35% DESIGN PLANS	STAY IN PLACE
2007	AIR	1.5"	ALONG PASSAGEWAY	AMTRAK LAUS RUN THRU TRACKS 35% DESIGN PLANS	STAY IN PLACE
2008	AIR	1.5"	EAST PORTAL	AMTRAK LAUS RUN THRU TRACKS 35% DESIGN PLANS	STAY IN PLACE
2009	AIR	1.5"	TRACK 12	AMTRAK LAUS RUN THRU TRACKS 35% DESIGN PLANS	STAY IN PLACE
2010	AIR	1.5"	TRACK 12	AMTRAK LAUS RUN THRU TRACKS 35% DESIGN PLANS	STAY IN PLACE
2011	AIR	1.5"	TRACK 11	AMTRAK LAUS RUN THRU TRACKS 35% DESIGN PLANS	STAY IN PLACE
2012	AIR	1.5"	TRACK 11	AMTRAK LAUS RUN THRU TRACKS 35% DESIGN PLANS	STAY IN PLACE
2013	AIR	1.5"	TRACK 9	AMTRAK LAUS RUN THRU TRACKS 35% DESIGN PLANS	STAY IN PLACE
2014	AIR	1.5"	TRACK 9	AMTRAK LAUS RUN THRU TRACKS 35% DESIGN PLANS	STAY IN PLACE
2015	AIR	1.5"	TRACK 7	AMTRAK LAUS RUN THRU TRACKS 35% DESIGN PLANS	STAY IN PLACE
2016	AIR	1.5"	TRACK 7	AMTRAK LAUS RUN THRU TRACKS 35% DESIGN PLANS	REMOVE
2017	AIR	1.5"	TRACK 5	AMTRAK LAUS RUN THRU TRACKS 35% DESIGN PLANS	STAY IN PLACE
2018	AIR	1.5"	TRACK 5	AMTRAK LAUS RUN THRU TRACKS 35% DESIGN PLANS	STAY IN PLACE
2019	AIR	1.5"	TRACK 3	AMTRAK LAUS RUN THRU TRACKS 35% DESIGN PLANS	STAY IN PLACE
2020	AIR	1.5"	TRACK 3	AMTRAK LAUS RUN THRU TRACKS 35% DESIGN PLANS	STAY IN PLACE
2021	ELECTRICAL	2-4"	PLATFORM 4 TO UNION STATION	LAUS_PLATFORM7_AS-BUILTS	RELOCATE
2022	ELECTRICAL	8-3"	PLATFORM 4 TO UNION STATION	LAUS_PLATFORM7_AS-BUILTS	RELOCATE
2023	ELECTRICAL	4-3" 3-2" 2-.25"	ALONG PASSAGEWAY	LAUS_PLATFORM7_AS-BUILTS	STAY IN PLACE
2024	ELECTRICAL	UNKNOWN	TRACK 4	LAUS_PLATFORM7_AS-BUILTS	STAY IN PLACE
2025	ELECTRICAL	UNKNOWN	SOUTH OF PASSAGEWAY ACROSS TRACKS	LAUS_PLATFORM7_AS-BUILTS	STAY IN PLACE
2026	ELECTRICAL	UNKNOWN	SOUTH OF CESAR CHAVEZ AVE	LAUS_PLATFORM7_AS-BUILTS	STAY IN PLACE
2027	ELECTRICAL	UNKNOWN	SOUTH OF CESAR CHAVEZ AVE	LAUS_PLATFORM7_AS-BUILTS	STAY IN PLACE
2028	ELECTRICAL	2'X2'X4"	ALONG REAR UNION STATION PARKING	LAUS_PLATFORM7_AS-BUILTS	STAY IN PLACE
2029	ELECTRICAL	2'X2'X4"	ALONG REAR UNION STATION PARKING	LAUS_PLATFORM7_AS-BUILTS	STAY IN PLACE
2030	ELECTRICAL	2'X2'X4"	ALONG REAR UNION STATION PARKING	LAUS_PLATFORM7_AS-BUILTS	STAY IN PLACE
2031	ELECTRICAL	2'X2'X4"	ALONG REAR UNION STATION PARKING	LAUS_PLATFORM7_AS-BUILTS	STAY IN PLACE
2032	ELECTRICAL	1'X8"X10"	NORTH OF EL MONTE BUSWAY	LAUS_PLATFORM7_AS-BUILTS	RELOCATE
2033	ELECTRICAL	1'X8"X10"	NORTH OF EL MONTE BUSWAY	LAUS_PLATFORM7_AS-BUILTS	PROTECT IN PLACE
2034	ELECTRICAL	1.5"X1'	TRACK 8	LAUS_PLATFORM7_AS-BUILTS	RELOCATE
2035	ELECTRICAL	2'X1'	TRACK 7	LAUS_PLATFORM7_AS-BUILTS	RELOCATE
2036	ELECTRICAL	2-4"	TRACK 7	LAUS_PLATFORM7_AS-BUILTS	RELOCATE
2037	ELECTRICAL	UNKNOWN	TRACK 8	LAUS_PLATFORM7_AS-BUILTS	RELOCATE
2038	ELECTRICAL	6-3", 3-1"	TRACK 8	LAUS_PLATFORM7_AS-BUILTS	RELOCATE
2039	ELECTRICAL	6-3", 3-1"	TRACK 8	LAUS_PLATFORM7_AS-BUILTS	RELOCATE

ID	UTILITY TYPE	SIZE	UTILITY LOCATION	AS-BUILT	DISPOSITION
2040	ELECTRICAL	5-3"	ALONG PASSAGEWAY	LAUS_PLATFORM7_AS-BUILTS	STAY IN PLACE
2041	ELECTRICAL	UNKNOWN	SOUTH OF CESAR CHAVEZ AVE	SCRTD METRO RAIL PROJECT CONTRACT NO. A135	STAY IN PLACE
2042	ELECTRICAL	UNKNOWN	GARDEN TRACK TO EL MONTE BUSWAY	SCRTD METRO RAIL PROJECT CONTRACT NO. A135	STAY IN PLACE
2043	GAS	UNKNOWN	101 FREEWAY	LAUS_PLATFORM7_AS-BUILTS	REMOVE
2044	CABLE	2'X2'X4"	SOUTH OF CESAR CHAVEZ AVE	LAUS_PLATFORM7_AS-BUILTS	STAY IN PLACE
2045	CABLE	2'X2'X4"	ALONG REAR UNION STATION PARKING	LAUS_PLATFORM7_AS-BUILTS	STAY IN PLACE
2046	CABLE	2'X2'X4"	ALONG REAR UNION STATION PARKING	LAUS_PLATFORM7_AS-BUILTS	STAY IN PLACE
2047	CABLE	1-1"	101 FREEWAY	LAUS_PLATFORM7_AS-BUILTS	RELOCATE
2048	CABLE	UNKNOWN	SOUTH OF PASSAGEWAY	LAUS_PLATFORM7_AS-BUILTS	STAY IN PLACE
2049	STORM DRAIN	UNKNOWN	WEST OF METRO GATEWAY	LAUS_PLATFORM7_AS-BUILTS	STAY IN PLACE
2050	STORM DRAIN	30"	NORTH OF PASSAGEWAY	LAUS_PLATFORM7_AS-BUILTS	STAY IN PLACE
2051	STORM DRAIN	30"	EAST PORTAL TO FREEWAY	LAUS_PLATFORM7_AS-BUILTS	STAY IN PLACE
2052	STORM DRAIN	30"	SOUTH OF PASSAGEWAY	LAUS_PLATFORM7_AS-BUILTS	STAY IN PLACE
2053	STORM DRAIN	UNKNOWN	PLATFORM 7	LAUS_PLATFORM7_AS-BUILTS	STAY IN PLACE
2054	STORM DRAIN	UNKNOWN	PLATFORM 7	LAUS_PLATFORM7_AS-BUILTS	STAY IN PLACE
2055	STORM DRAIN	UNKNOWN	WEST OF ACCESS ROAD	LAUS_PLATFORM7_AS-BUILTS	STAY IN PLACE
2057	STORM DRAIN	UNKNOWN	WEST OF METRO GATEWAY	LAUS_PLATFORM7_AS-BUILTS	STAY IN PLACE
2058	STORM DRAIN	UNKNOWN	NORTH WEST OF EAST PORTAL	LAUS_PLATFORM7_AS-BUILTS	STAY IN PLACE
2059	STORM DRAIN	UNKNOWN	SOUTH WEST OF EAST PORTAL	LAUS_PLATFORM7_AS-BUILTS	STAY IN PLACE
2060	STORM DRAIN	UNKNOWN	WEST OF EAST PORTAL	LAUS_PLATFORM7_AS-BUILTS	STAY IN PLACE
2061	SEWER	UNKNOWN	ALONG EL MONTE BUSWAY	LAUS_PLATFORM7_AS-BUILTS	REMOVE
2062	TELECOM	UNKNOWN	NORTH OF PASSAGEWAY	LAUS_PLATFORM7_AS-BUILTS	STAY IN PLACE
2063	TELECOM	UNKNOWN	ALONG REAR UNION STATION PARKING	LAUS_PLATFORM7_AS-BUILTS	STAY IN PLACE
2064	TELECOM	5-3" 2-2" 2-2.5"	SOUTH OF PASSAGEWAY	LAUS_PLATFORM7_AS-BUILTS	STAY IN PLACE
2065	TELECOM	UNKNOWN	PLATFORM 3 TO 101 FREEWAY	LAUS_PLATFORM7_AS-BUILTS	REMOVE
2066	WATER	2"	PLATFORM 2 NORTH OF PASSAGEWAY	AMTRAK LAUS RUN THRU TRACKS 35% DESIGN PLANS	STAY IN PLACE
2067	WATER	2"	PLATFORM 2 SOUTH OF PASSAGEWAY	AMTRAK LAUS RUN THRU TRACKS 35% DESIGN PLANS	STAY IN PLACE
2068	WATER	2"	PLATFORM 2 SOUTH OF PASSAGEWAY	AMTRAK LAUS RUN THRU TRACKS 35% DESIGN PLANS	STAY IN PLACE
2069	WATER	2"	PLATFORM 2 SOUTH OF PASSAGEWAY	AMTRAK LAUS RUN THRU TRACKS 35% DESIGN PLANS	STAY IN PLACE
2070	WATER	2"	PLATFORM 3 NORTH OF PASSAGEWAY	AMTRAK LAUS RUN THRU TRACKS 35% DESIGN PLANS	STAY IN PLACE
2071	WATER	2"	PLATFORM 3 SOUTH OF PASSAGEWAY	AMTRAK LAUS RUN THRU TRACKS 35% DESIGN PLANS	STAY IN PLACE
2072	WATER	2"	PLATFORM 3 SOUTH OF PASSAGEWAY	AMTRAK LAUS RUN THRU TRACKS 35% DESIGN PLANS	STAY IN PLACE
2073	WATER	2"	PLATFORM 3 SOUTH OF PASSAGEWAY	AMTRAK LAUS RUN THRU TRACKS 35% DESIGN PLANS	STAY IN PLACE
2074	WATER	2"	PLATFORM 4 NORTH OF PASSAGEWAY	AMTRAK LAUS RUN THRU TRACKS 35% DESIGN PLANS	STAY IN PLACE
2075	WATER	2"	PLATFORM 4 SOUTH OF PASSAGEWAY	AMTRAK LAUS RUN THRU TRACKS 35% DESIGN PLANS	STAY IN PLACE
2076	WATER	2"	PLATFORM 4 SOUTH OF PASSAGEWAY	AMTRAK LAUS RUN THRU TRACKS 35% DESIGN PLANS	REMOVE
2077	WATER	2"	PLATFORM 4 SOUTH OF PASSAGEWAY	AMTRAK LAUS RUN THRU TRACKS 35% DESIGN PLANS	REMOVE
2078	WATER	2"	PLATFORM 5 NORTH OF PASSAGEWAY	AMTRAK LAUS RUN THRU TRACKS 35% DESIGN PLANS	STAY IN PLACE
2079	WATER	2"	PLATFORM 5 SOUTH OF PASSAGEWAY	AMTRAK LAUS RUN THRU TRACKS 35% DESIGN PLANS	STAY IN PLACE
2080	WATER	2"	PLATFORM 5 SOUTH OF PASSAGEWAY	AMTRAK LAUS RUN THRU TRACKS 35% DESIGN PLANS	STAY IN PLACE

ID	UTILITY TYPE	SIZE	UTILITY LOCATION	AS-BUILT	DISPOSITION
2081	WATER	2"	PLATFORM 5 SOUTH OF PASSAGEWAY	AMTRAK LAUS RUN THRU TRACKS 35% DESIGN PLANS	REMOVE
2082	WATER	2"	PLATFORM 6 NORTH OF PASSAGEWAY	AMTRAK LAUS RUN THRU TRACKS 35% DESIGN PLANS	STAY IN PLACE
2083	WATER	2"	PLATFORM 6 SOUTH OF PASSAGEWAY	AMTRAK LAUS RUN THRU TRACKS 35% DESIGN PLANS	STAY IN PLACE
2084	WATER	2"	PLATFORM 6 SOUTH OF PASSAGEWAY	AMTRAK LAUS RUN THRU TRACKS 35% DESIGN PLANS	STAY IN PLACE
2085	WATER	2"	PLATFORM 6 SOUTH OF PASSAGEWAY	AMTRAK LAUS RUN THRU TRACKS 35% DESIGN PLANS	STAY IN PLACE
2086	WATER	2"	PLATFORM 7 NORTH OF PASSAGEWAY	AMTRAK LAUS RUN THRU TRACKS 35% DESIGN PLANS	STAY IN PLACE
2087	WATER	2"	PLATFORM 7 SOUTH OF PASSAGEWAY	AMTRAK LAUS RUN THRU TRACKS 35% DESIGN PLANS	STAY IN PLACE
2088	WATER	2"	PLATFORM 7 SOUTH OF PASSAGEWAY	AMTRAK LAUS RUN THRU TRACKS 35% DESIGN PLANS	STAY IN PLACE
2089	WATER	2"	SOUTH OF EAST PORTAL	LAUS_PLATFORM7_AS-BUILTS	RELOCATE
2090	WATER	20"	SOUTH ACCESS ROAD	LAUS_PLATFORM7_AS-BUILTS	RELOCATE
2091	WATER	UNKNOWN	METRO WATER DISTRICT TO 101 FREEWAY	LAUS_PLATFORM7_AS-BUILTS	RELOCATE
2092	WATER	UNKNOWN	NORTH OF EAST PORTAL	LAUS_PLATFORM7_AS-BUILTS	STAY IN PLACE
2093	WATER	UNKNOWN	PLATFORM 7 NORTH OF PASSAGEWAY	LAUS_PLATFORM7_AS-BUILTS	STAY IN PLACE
2094	WATER	2"	PLATFORM 6 SOUTH OF PASSAGEWAY	LAUS_PLATFORM7_AS-BUILTS	STAY IN PLACE
2095	WATER	UNKNOWN	PLATFORM 7 NORTH OF PASSAGEWAY	LAUS_PLATFORM7_AS-BUILTS	STAY IN PLACE
2096	WATER	UNKNOWN	PLATFORM 7 NORTH OF PASSAGEWAY	LAUS_PLATFORM7_AS-BUILTS	STAY IN PLACE
2097	ELECTRICAL	UNKNOWN	SOUTH OF PASSAGEWAY	AMTRAK LAUS RUN THRU TRACKS 35% DESIGN PLANS	RELOCATE
2098	ELECTRICAL	UNKNOWN	ALONG REAR UNION STATION PARKING	AMTRAK LAUS RUN THRU TRACKS 35% DESIGN PLANS	STAY IN PLACE
2099	ELECTRICAL	UNKNOWN	EAST OF BAGGAGE HANDLING BUILDING	AMTRAK LAUS RUN THRU TRACKS 35% DESIGN PLANS	STAY IN PLACE
2100	ELECTRICAL	UNKNOWN	REAR UNION STATION PARKING	PASADENA BLUE LINE 6490 E-041	STAY IN PLACE
2101	ELECTRICAL	UNKNOWN	REAR UNION STATION PARKING	PASADENA BLUE LINE 6490 E-041	STAY IN PLACE
2102	OIL	UNKNOWN	REAR UNION STATION PARKING	PASADENA BLUE LINE 6490 E-041	STAY IN PLACE
2103	FIBER OPTICS	UNKNOWN	EAST OF BAGGAGE HANDLING BUILDING	PASADENA GOLD LINE FIBER OPTIC INTERFACE AT METRO RED LINE CONTRACT NUMBER C0699	STAY IN PLACE
2104	ELECTRICAL	2-4"	EAST OF BAGGAGE HANDLING BUILDING	Pasadena Gold Line fiber optic Interface at Metro Red Line Contract Number C0699	STAY IN PLACE
2105	ELECTRICAL	UNKNOWN	EAST OF BAGGAGE HANDLING BUILDING	ADJUSTED PER AIRX SURVEY: 2017-08-11	STAY IN PLACE
2106	ELECTRICAL	UNKNOWN	SOUTH ACCESS ROAD	ADJUSTED PER AIRX SURVEY: 2017-08-11	RELOCATE
2107	FIBER OPTICS	4-4"	FIRE LANE EAST OF PLATFORM 7	LAUS_Platform7_As-Builts (EP-01 to EP-04) Adjusted per AirX Survey: 2017-08-11	STAY IN PLACE
2108	WATER	UNKNOWN	ROADWAY SOUTH OF MOSAIC APTS	SITE IMPROVEMENTS 2003 - SURVEY	STAY IN PLACE
2109	WATER	UNKNOWN	FIRE LANE EAST OF PLATFORM 7	ADJUSTED PER AIRX SURVEY: 2017-08-11	RELOCATE
2112	ELECTRICAL	8-3", 4-1"	NORTH OF ACCESS ROAD	SCRTD Metro Rail Project Contract No. A135 E-201, AirX/Guida Utility Survey: 2018-06-29	RELOCATE
2113	ELECTRICAL	4-3"	PLATFORM 7	ADJUSTED PER AIRX SURVEY: 2017-08-11	STAY IN PLACE
2117	FIBER OPTICS	4-4"	EAST OF PLATFORM 7	ADJUSTED PER AIRX SURVEY: 2017-08-11	STAY IN PLACE
2118	TELECOM	2-3"	PLATFORM 7	ADJUSTED PER AIRX SURVEY: 2017-08-11	STAY IN PLACE
2119	TELECOM	3-4"	PLATFORM 7	ADJUSTED PER AIRX SURVEY: 2017-08-11	STAY IN PLACE
2120	ELECTRICAL	2-3"	NORTH OF ACCESS ROAD	ADJUSTED PER AIRX SURVEY: 2017-08-11	RELOCATE
2121	ELECTRICAL	UNKNOWN	NORTH OF ACCESS ROAD	ADJUSTED PER AIRX SURVEY: 2017-08-11	STAY IN PLACE

Original plan submittal made in Aug. 2019

35% DESIGN SUBMITTAL
NOT FOR CONSTRUCTION

PRELIMINARY

THE PREPARATION OF THIS DRAWING HAS BEEN FINANCED IN PART THROUGH A GRANT FROM THE U.S. DEPARTMENT OF TRANSPORTATION, FEDERAL TRANSIT ADMINISTRATION (FTA), UNDER THE FEDERAL TRANSIT ACT OF 1964, AS AMENDED, AND IN PART BY THE TAXES OF THE CITIZENS OF LOS ANGELES COUNTY AND OF THE STATE OF CALIFORNIA.

Rev No.	Date	Description
1	3/21	Conflict matrix updated to reflect design changes
2	12/21	
3	6/22	

DESIGNED BY M.AGUILAR
DRAWN BY M.AGUILAR
CHECKED BY I.ALTARES
IN CHARGE T.KIM
DATE 3/05/2021

LOS ANGELES COUNTY
METROPOLITAN TRANSPORTATION AUTHORITY

BA INC TRUE ENGINEERING EXCELLENCE

HDR ENGINEERING
350 S. GRAND AVENUE SUITE 2900
LOS ANGELES, CA 90071
(213) 239-5800

SUBMITTED: _____ PROJECT MANAGER

APPROVED: _____

LINK UNION STATION PROJECT

UTILITIES
ONSITE UTILITIES - TABLE

CONTRACT NO
DRAWING NO CU-303
REV --
SCALE NO SCALE
SHEET NO 144

2/15/2022 4:49:37 PM USER = MAGUILAR
C:\PWWORKING\SAC\D1004985\LUS-CU-30# STATION EXISTING UTILITY TABLE.DWG

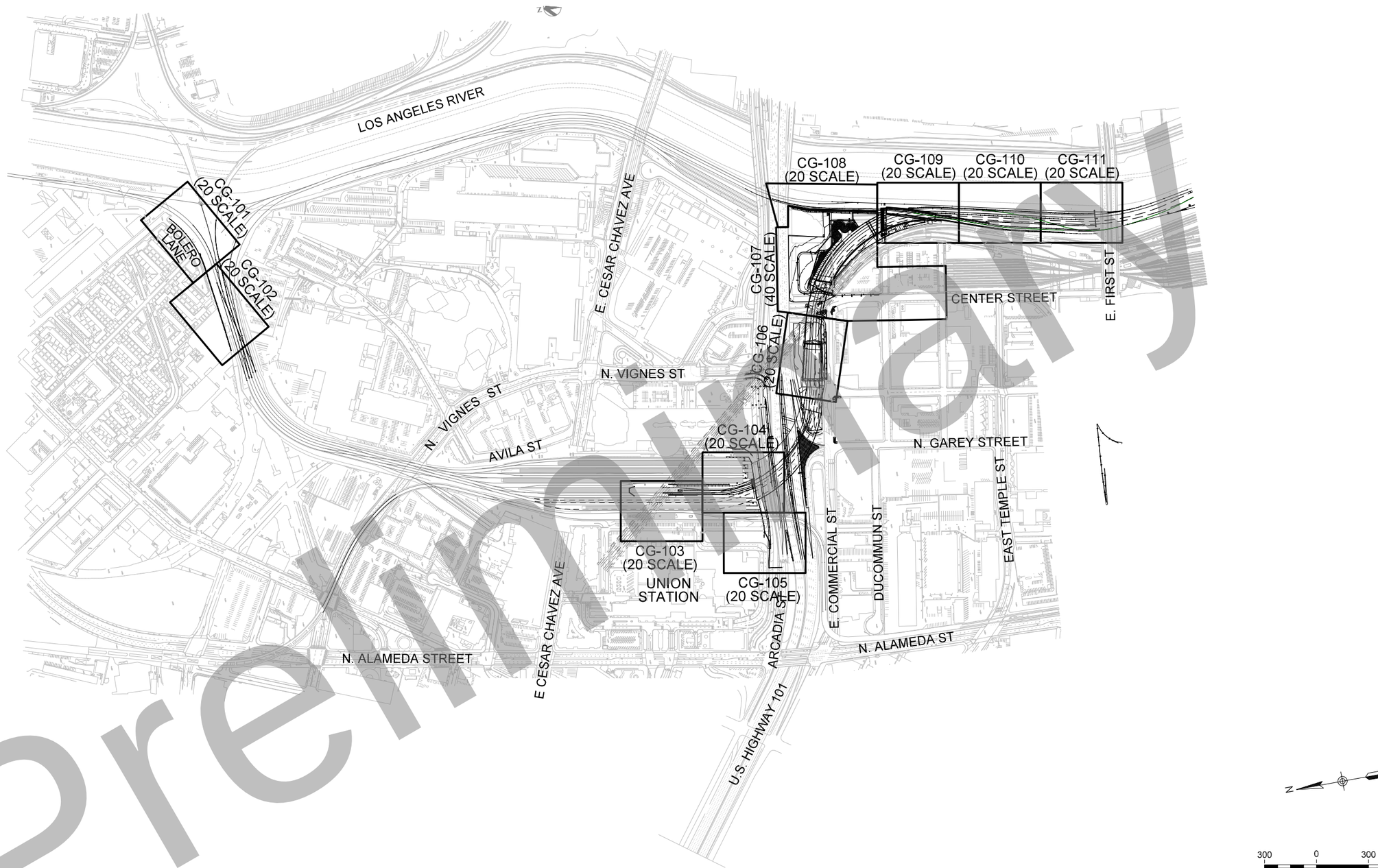

Premiary

300 0 300 600

1"=300'

35% DESIGN PLANS
NOT FOR CONSTRUCTION

Original plan submittal made in Aug. 2019

Rev No.	Date	Description
1	3/21	
2	12/21	
3	6/22	Update Sheet locations and counts

THE PREPARATION OF THIS DRAWING HAS BEEN FINANCED IN PART THROUGH A GRANT FROM THE U.S. DEPARTMENT OF TRANSPORTATION, FEDERAL TRANSIT ADMINISTRATION (FTA), UNDER THE FEDERAL TRANSIT ACT OF 1964, AS AMENDED, AND IN PART BY THE TAXES OF THE CITIZENS OF LOS ANGELES COUNTY AND OF THE STATE OF CALIFORNIA.

DESIGNED BY F. ZHEN
DRAWN BY O. MAUSS
CHECKED BY M. HARROLD
IN CHARGE T. KIM
DATE 6/01/2022

REGISTERED PROFESSIONAL ENGINEER — No. Exp. — CIVIL — STATE OF CALIFORNIA

Metro

LOS ANGELES COUNTY
METROPOLITAN TRANSPORTATION AUTHORITY

HDR

HDR ENGINEERING
350 S. GRAND AVENUE
SUITE 2900
LOS ANGELES, CA 90071
(213) 239-5800

SUBMITTED: _____ PROJECT MANAGER

APPROVED: _____

LINK UNION STATION PROJECT

DRAINAGE AND GRADING PLANS
KEY MAP

CONTRACT NO

DRAWING NO CG-002 REV

SCALE 1"=300'

SHEET NO 145

Plot Driver=$PLTDRVS$ Pentable=PlotStamp.tbl USER = KWARFIEL 5:01:43 PM 5/25/2022 $FILE$

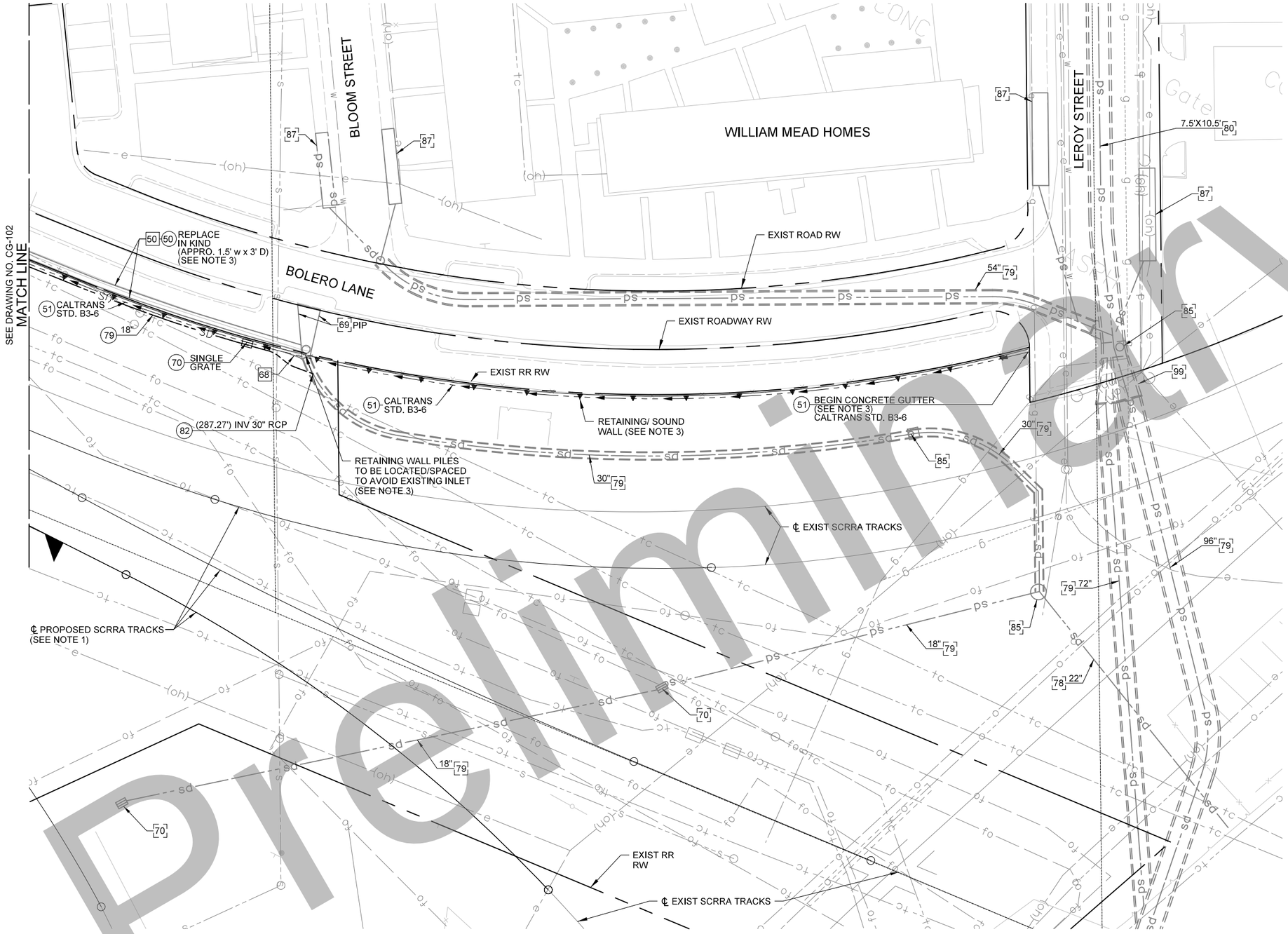

CONSTRUCTION SYMBOLS:

- CONSTRUCT
- REMODEL EXISTING
- EXISTING
- REMOVE AND CONSTRUCT
- REMOVE
- WORK BY OTHERS

CONSTRUCTION NOTES:

50	CONCRETE CULVERT
51	CONCRETE GUTTER, DETAILS PER PLAN
68	CONCRETE WING WALL
69	FUNNEL INLET
70	GRATING INLET PER SPPWC 304-3, NO. OF GRATES PER PLAN
78	VITRIFIED CLAY PIPE (VCP)
79	REINFORCED CONCRETE PIPE (RCP)
80	REINFORCED CONCRETE BOX (RCB)
82	JUNCTION STRUCTURE PER CITY OF LA S-302-1
85	STORM DRAIN MAINTENANCE HOLE
87	CURB OPENING CATCH BASIN
99	TRANSITION STRUCTURE

NOTES:

1. SEE TRACK PLANS FOR DETAILS ON PROPOSED SCRRA TRACKS SHOWN HEREIN.
2. SEE ROADWAY PLANS FOR DETAILS ON PROPOSED LOCAL STREET MODIFICATIONS AND REMOVALS.
3. SEE OFFSITE STRUCTURES PLANS FOR DETAILS ON PROPOSED BRIDGES, RETAINING WALLS, AND STORM DRAIN PROTECTION SLAB
4. SEE WILLIAM MEAD HOMES RETAINING WALL PLANS FOR LOCATION OF GUTTER RELATIVE TO RETAINING WALL

35% DESIGN PLANS
NOT FOR CONSTRUCTION

Preliminary

Original plan submittal made in Aug. 2019

THE PREPARATION OF THIS DRAWING HAS BEEN FINANCED IN PART THROUGH A GRANT FROM THE U.S. DEPARTMENT OF TRANSPORTATION, FEDERAL TRANSIT ADMINISTRATION (FTA), UNDER THE FEDERAL TRANSIT ACT OF 1964, AS AMENDED, AND IN PART BY THE TAXES OF THE CITIZENS OF LOS ANGELES COUNTY AND OF THE STATE OF CALIFORNIA.

Rev No.	Date	Description
1	3/21	
2	12/21	
3	6/22	

DESIGNED BY F. ZHEN
DRAWN BY O. MAUSS
CHECKED BY M. HARROLD
IN CHARGE T. KIM
DATE 8/01/2019

REGISTERED PROFESSIONAL ENGINEER — No. ____ Exp. ____ CIVIL — STATE OF CALIFORNIA

Metro
LOS ANGELES COUNTY METROPOLITAN TRANSPORTATION AUTHORITY
HDR
350 S. GRAND AVENUE SUITE 2900 LOS ANGELES, CA 90071 (213) 239-5800

SUBMITTED: _____ PROJECT MANAGER
APPROVED: _____

LINK UNION STATION PROJECT
DRAINAGE AND GRADING PLANS SHEET 1 0F 11

CONTRACT NO
DRAWING NO CG-101
REV
SCALE 1"=20'
SHEET NO 146

Plot Driver=$PLTDRV$$ Pentable=PlotStamp.tbl USER = KWARFIEL 11:19:18 AM 3/8/2022 $FILE$

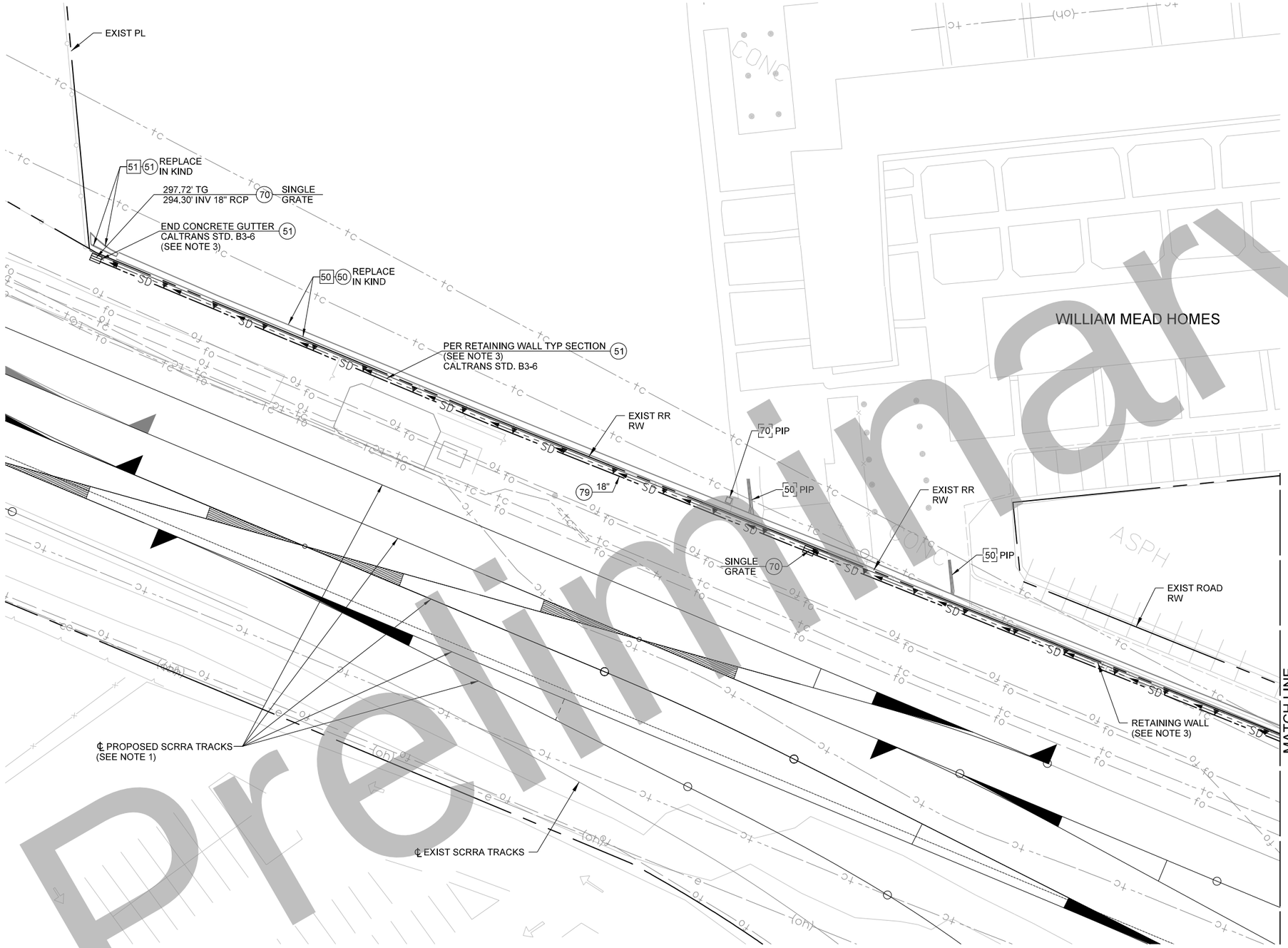

CONSTRUCTION SYMBOLS:

CONSTRUCT	REMODEL EXISTING
EXISTING	REMOVE AND CONSTRUCT
REMOVE	WORK BY OTHERS

CONSTRUCTION NOTES:

50 CONCRETE CULVERT, DETAILS PER PLAN

51 CONCRETE GUTTER

70 GRATING INLET PER SPPWC 304-3, NO. OF GRATES PER PLAN

79 REINFORCED CONCRETE PIPE (RCP)

NOTES:

1. SEE TRACK PLANS FOR DETAILS ON PROPOSED SCRRA TRACKS SHOWN HEREIN.
2. SEE ROADWAY PLANS FOR DETAILS ON PROPOSED LOCAL STREET MODIFICATIONS AND REMOVALS.
3. SEE OFFSITE STRUCTURES PLANS FOR DETAILS ON PROPOSED BRIDGES, RETAINING WALLS, AND STORM DRAIN PROTECTION SLAB

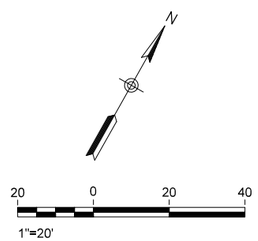

35% DESIGN PLANS
NOT FOR CONSTRUCTION

Preliminary

Original plan submittal made in Aug. 2019

Rev No.	Date	Description
1	3/21	
2	12/21	
3	6/22	

THE PREPARATION OF THIS DRAWING HAS BEEN FINANCED IN PART THROUGH A GRANT FROM THE U.S. DEPARTMENT OF TRANSPORTATION, FEDERAL TRANSIT ADMINISTRATION (FTA), UNDER THE FEDERAL TRANSIT ACT OF 1964, AS AMENDED, AND IN PART BY THE TAXES OF THE CITIZENS OF LOS ANGELES COUNTY AND OF THE STATE OF CALIFORNIA.

DESIGNED BY F. ZHEN
DRAWN BY O. MAUSS
CHECKED BY M. HARROLD
IN CHARGE T. KIM
DATE 8/01/2019

REGISTERED PROFESSIONAL ENGINEER — No. — EXP. — CIVIL — STATE OF CALIFORNIA

Metro
LOS ANGELES COUNTY
METROPOLITAN TRANSPORTATION AUTHORITY

HDR
350 S. GRAND AVENUE
SUITE 2900
LOS ANGELES, CA 90071
(213) 239-5800

SUBMITTED: _____ PROJECT MANAGER
APPROVED: _____

LINK UNION STATION PROJECT
DRAINAGE AND GRADING PLANS
SHEET 2 0F 11

CONTRACT NO
DRAWING NO CG-102 REV
SCALE 1"=20'
SHEET NO 147

Plot Driver=$PLTDRVS$ Pentable=PlotStamp.tbl USER = KWARFIEL 2:08:22 PM 3/9/2022 $FILE$

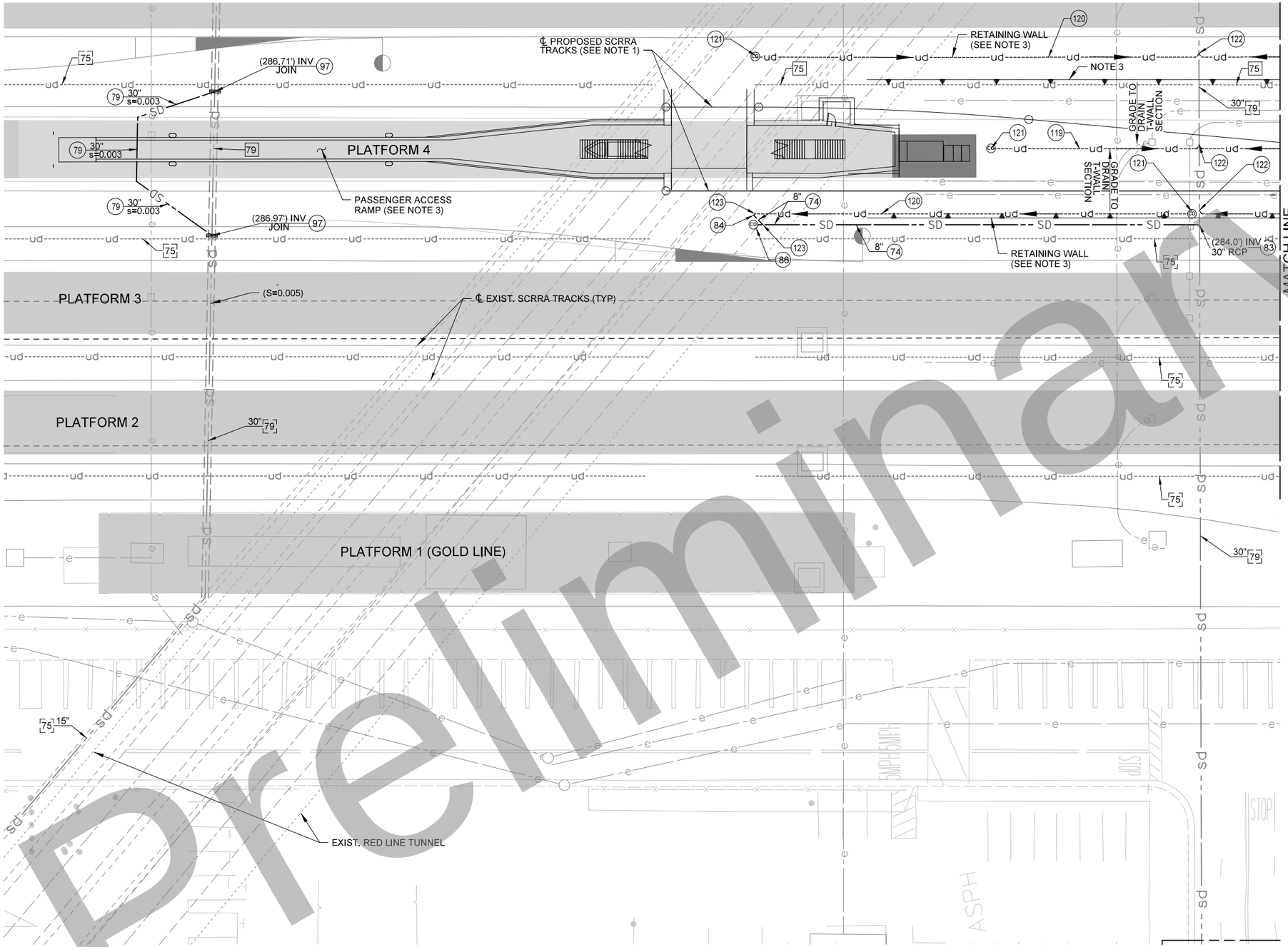

CONSTRUCTION SYMBOLS:

CONSTRUCT	REMODEL EXISTING
EXISTING	REMOVE AND CONSTRUCT
REMOVE	WORK BY OTHERS

CONSTRUCTION NOTES:

74	POLYVINYL CHLORIDE (PVC) (SCH80) PIPE
75	8" PERFORATED CORRUGATED METAL PIPE (CMP)
79	REINFORCED CONCRETE PIPE (RCP)
83	STORM DRAIN CONNECTION PER SPPWC 332-2
84	CONNECTING TO 8" STORM DRAIN WITH FITTINGS NEEDED
86	STORM DRAIN CLEANOUT
97	CONCRETE COLLAR PER SPPWC 380-4
119	12" PERFORATED PVC (SCH 80)
120	8" PERFORATED PVC (SCH 80) UNDERDRAIN
121	UNDERDRAIN TERMINAL / INTERMEDIATE CLEANOUT
122	UNDERDRAIN SADDLE CONNECTION
123	45° FITTINGS AT GRADE BREAK

NOTES:

1. SEE TRACK PLANS FOR DETAILS ON PROPOSED SCRRA TRACKS SHOWN HEREIN.
2. SEE ROADWAY PLANS FOR DETAILS ON PROPOSED LOCAL STREET MODIFICATIONS AND REMOVALS.
3. SEE OFFSITE STRUCTURES PLANS FOR DETAILS ON PROPOSED BRIDGES, RETAINING WALLS, AND STORM DRAIN PROTECTION SLAB

N

20 0 20 40

1"=20'

35% DESIGN PLANS
NOT FOR CONSTRUCTION

Preliminary

Original plan submittal made in Aug. 2019

THE PREPARATION OF THIS DRAWING HAS BEEN FINANCED IN PART THROUGH A GRANT FROM THE U.S. DEPARTMENT OF TRANSPORTATION, FEDERAL TRANSIT ADMINISTRATION (FTA), UNDER THE FEDERAL TRANSIT ACT OF 1964, AS AMENDED, AND IN PART BY THE TAXES OF THE CITIZENS OF LOS ANGELES COUNTY AND OF THE STATE OF CALIFORNIA.

Rev No.	Date	Description
1	3/21	Lowering of 30" SD across platforms removed
2	12/21	
3	6/22	

DESIGNED BY F. ZHEN
DRAWN BY O. MAUSS
CHECKED BY M. HARROLD
IN CHARGE T. KIM
DATE 3/05/2021

REGISTERED PROFESSIONAL ENGINEER — No. ____ Exp. ____ CIVIL — STATE OF CALIFORNIA

Metro
LOS ANGELES COUNTY
METROPOLITAN TRANSPORTATION AUTHORITY
HDR
350 S. GRAND AVENUE
SUITE 2900
LOS ANGELES, CA 90071
(213) 239-5800

SUBMITTED: _____ PROJECT MANAGER
APPROVED: _____

LINK UNION STATION PROJECT
DRAINAGE AND GRADING PLANS
SHEET 3 0F 11

CONTRACT NO
DRAWING NO CG-103 REV
SCALE 1"=20'
SHEET NO 148

Plot Driver=$PLTDRV$$ Pentable=PlotStamp.tbl USER = KWARFIEL 2:36:31 PM 3/7/2022 $FILE$

RETAINING WALL (SEE NOTE 3)

RETAINING WALL (SEE CALTRANS PLANS)

EDGE OF US-101 VIADUCT STRUCTURE (SEE CALTRANS PLANS)

KEEP CLEAR FIRE LANE

FIRE ACCESS ROAD (SEE NOTE 2)

EL MONTE BUSWAY

PLATFORM 7

PLATFORM 6

PLATFORM 5

PLATFORM 3

PLATFORM 2

℄ EXIST. SCRRA TRACKS (TYP)

US-101 BRIDGE ABUTMENT (SEE CALTRANS PLANS)

RETAINING WALL (SEE NOTE 3)

SEE UTILITIES PLAN FOR RELOCATION

GRADE TO DRAIN T-WALL SECTION

SEE DRAWING NO. CG-103
MATCH LINE

RETAINING WALL (SEE NOTE 3)

RETAINING WALL (SEE CALTRANS PLANS)

EDGE OF US-101 VIADUCT STRUCTURE (SEE CALTRANS PLANS)

MATCH LINE
SEE DRAWING NO. CG-105

CONSTRUCTION SYMBOLS:

CONSTRUCT	REMODEL EXISTING
EXISTING	REMOVE AND CONSTRUCT
REMOVE	WORK BY OTHERS

CONSTRUCTION NOTES:

75	8" PERFORATED CORRUGATED METAL PIPE (CMP)
119	12" PERFORATED PVC (SCH 80)
120	8" PERFORATED PVC (SCH 80) UNDERDRAIN
121	UNDERDRAIN TERMINAL / INTERMEDIATE CLEANOUT

NOTES:

1. SEE TRACK PLANS FOR DETAILS ON PROPOSED SCRRA TRACKS SHOWN HEREIN.
2. SEE ONSITE CIVIL PLANS FOR DETAILS ON PROPOSED FIRE ACCESS ROAD
3. SEE OFFSITE STRUCTURES PLANS FOR DETAILS ON PROPOSED BRIDGES, RETAINING WALLS, AND STORM DRAIN PROTECTION SLAB

N

20 0 20 40
1"=20'

35% DESIGN PLANS
NOT FOR CONSTRUCTION

Preliminary

Original plan submittal made in Aug. 2019

THE PREPARATION OF THIS DRAWING HAS BEEN FINANCED IN PART THROUGH A GRANT FROM THE U.S. DEPARTMENT OF TRANSPORTATION, FEDERAL TRANSIT ADMINISTRATION (FTA), UNDER THE FEDERAL TRANSIT ACT OF 1964, AS AMENDED, AND IN PART BY THE TAXES OF THE CITIZENS OF LOS ANGELES COUNTY AND OF THE STATE OF CALIFORNIA.

Rev No.	Date	Description
1	3/21	
2	12/21	
3	6/22	

DESIGNED BY F. ZHEN
DRAWN BY O. MAUSS
CHECKED BY M. HARROLD
IN CHARGE T. KIM
DATE 8/01/2019

REGISTERED PROFESSIONAL ENGINEER — No. ____ Exp. ____ CIVIL — STATE OF CALIFORNIA

Metro
LOS ANGELES COUNTY
METROPOLITAN TRANSPORTATION AUTHORITY

HDR
350 S. GRAND AVENUE
SUITE 2900
LOS ANGELES, CA 90071
(213) 239-5800

SUBMITTED: _____ PROJECT MANAGER

APPROVED: _____

LINK UNION STATION PROJECT

DRAINAGE AND GRADING PLANS SHEET 4 0F 11

CONTRACT NO

DRAWING NO CG-104 REV

SCALE 1"=20'

SHEET NO 149

Plot Driver=$PLTDRVS$ Pentable=PlotStamp.tbl USER = KWARFIEL 3:57:56 PM 3/9/2022 $FILE$

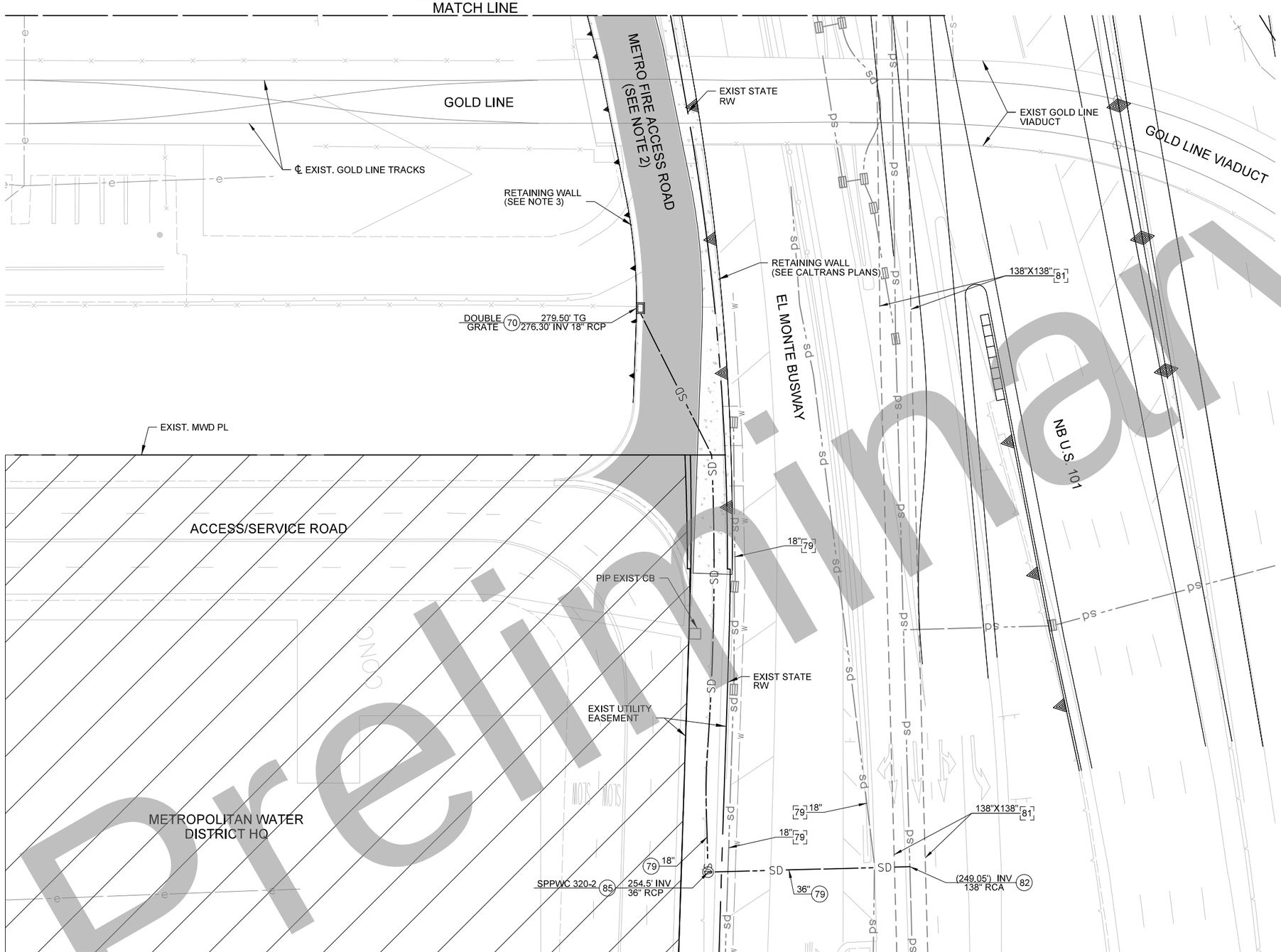

CONSTRUCTION SYMBOLS:

- CONSTRUCT
- REMODEL EXISTING
- EXISTING
- REMOVE AND CONSTRUCT
- REMOVE
- WORK BY OTHERS

CONSTRUCTION NOTES:

70 GRATING INLET PER SPPWC 304-3, NO. OF GRATES PER PLAN
79 REINFORCED CONCRETE PIPE (RCP)
81 REINFORCED CONCRETE ARCH (RCA)
82 JUNCTION STRUCTURE PER CITY OF LA S-302-1
85 STORM DRAIN MAINTENANCE HOLE PER SPPWC 320-2 OR 321-2 PER PLAN

NOTES:

1. SEE TRACK PLANS FOR DETAILS ON PROPOSED SCRRA TRACKS SHOWN HEREIN.
2. SEE ONSITE CIVIL PLANS FOR DETAILS ON PROPOSED FIRE ACCESS ROAD
3. SEE OFFSITE STRUCTURES PLANS FOR DETAILS ON PROPOSED BRIDGES, RETAINING WALLS, AND STORM DRAIN PROTECTION SLAB

LEGEND:

APPROXIMATE LIMITS OF MWD UNDERGROUND PARKING STRUCTURE. EXACT LOCATION TO BE VERIFIED BY CONTRACTOR

N

20 0 20 40
1"=20'

35% DESIGN PLANS
NOT FOR CONSTRUCTION

Preliminary

Original plan submittal made in Aug. 2019

THE PREPARATION OF THIS DRAWING HAS BEEN FINANCED IN PART THROUGH A GRANT FROM THE U.S. DEPARTMENT OF TRANSPORTATION, FEDERAL TRANSIT ADMINISTRATION (FTA), UNDER THE FEDERAL TRANSIT ACT OF 1964, AS AMENDED, AND IN PART BY THE TAXES OF THE CITIZENS OF LOS ANGELES COUNTY AND OF THE STATE OF CALIFORNIA.

Rev No.	Date	Description
1	3/21	
2	12/21	
3	6/22	

DESIGNED BY F. ZHEN
DRAWN BY O. MAUSS
CHECKED BY M. HARROLD
IN CHARGE T. KIM
DATE 8/01/2019

REGISTERED PROFESSIONAL ENGINEER — No. — EXP. — CIVIL — STATE OF CALIFORNIA

Metro
LOS ANGELES COUNTY
METROPOLITAN TRANSPORTATION AUTHORITY
HDR
350 S. GRAND AVENUE
SUITE 2900
LOS ANGELES, CA 90071
(213) 239-5800

SUBMITTED: _____ PROJECT MANAGER
APPROVED: _____

LINK UNION STATION PROJECT
DRAINAGE AND GRADING PLANS
SHEET 5 0F 11

CONTRACT NO
DRAWING NO CG-105 REV
SCALE 1"=20'
SHEET NO 150

Plot Driver=$PLTDRVS$ Pentable=PlotStamp.tbl USER = KWARFIEL 2:20:48 PM 3/9/2022 $FILE$

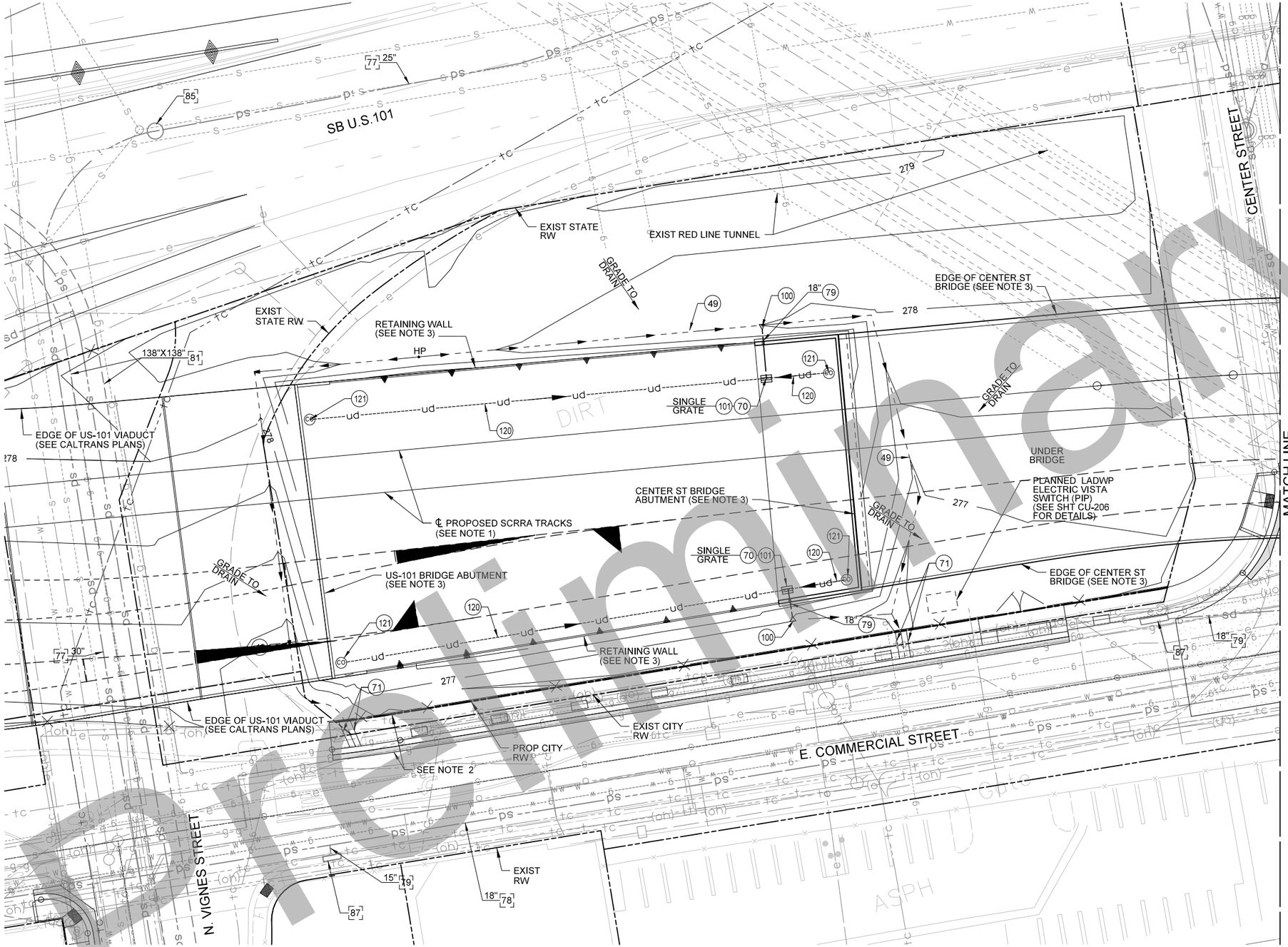

CONSTRUCTION SYMBOLS:

- CONSTRUCT
- REMODEL EXISTING
- EXISTING
- REMOVE AND CONSTRUCT
- REMOVE
- WORK BY OTHERS

CONSTRUCTION NOTES:

49	ROCK LINED DITCH (2' BOTTOM WIDTH, 1' DEEP, SIDE SLOPE 2:1, SMALL ROCK 5")
70	GRATING INLET PER SPPWC 304-3, NO. OF GRATES PER PLAN
71	CURB DRAIN PER SPPWC 151-2
77	BRICK PIPE
78	VITRIFIED CLAY PIPE (VCP)
79	REINFORCED CONCRETE PIPE (RCP)
81	REINFORCED CONCRETE ARCH (RCA)
85	STORM DRAIN MAINTENANCE HOLE
87	CURB OPENING CATCH BASIN
100	FLARE END SECTION PER CALTRANS STD. D94B
101	WALL DRAIN
120	8" PERFORATED PVC (SCH 80) UNDERDRAIN
121	UNDERDRAIN TERMINAL / INTERMEDIATE CLEANOUT

NOTES:

1. SEE TRACK PLANS FOR DETAILS ON PROPOSED SCRRA TRACKS SHOWN HEREIN.
2. SEE ROADWAY PLANS FOR DETAILS ON PROPOSED LOCAL STREET MODIFICATIONS AND REMOVALS.
3. SEE OFFSITE STRUCTURES PLANS FOR DETAILS ON PROPOSED BRIDGES, RETAINING WALLS, AND STORM DRAIN PROTECTION SLAB

N

20 0 20 40

1"=20'

35% DESIGN PLANS
NOT FOR CONSTRUCTION

Preliminary

Original plan submittal made in Aug. 2019

THE PREPARATION OF THIS DRAWING HAS BEEN FINANCED IN PART THROUGH A GRANT FROM THE U.S. DEPARTMENT OF TRANSPORTATION, FEDERAL TRANSIT ADMINISTRATION (FTA), UNDER THE FEDERAL TRANSIT ACT OF 1964, AS AMENDED, AND IN PART BY THE TAXES OF THE CITIZENS OF LOS ANGELES COUNTY AND OF THE STATE OF CALIFORNIA.

Rev No.	Date	Description
1	3/21	Updated to show storm filter BMP
2	12/21	
3	6/22	Modified rock lined ditch alignment shown

DESIGNED BY F. ZHEN
DRAWN BY O. MAUSS
CHECKED BY M. HARROLD
IN CHARGE T. KIM
DATE 6/01/2022

REGISTERED PROFESSIONAL ENGINEER — No. ____ Exp. ____ CIVIL — STATE OF CALIFORNIA

Metro
LOS ANGELES COUNTY
METROPOLITAN TRANSPORTATION AUTHORITY
HDR
350 S. GRAND AVENUE
SUITE 2900
LOS ANGELES, CA 90071
(213) 239-5800

SUBMITTED: _____ PROJECT MANAGER
APPROVED: _____

LINK UNION STATION PROJECT
DRAINAGE AND GRADING PLANS
SHEET 6 0F 11

CONTRACT NO
DRAWING NO CG-106 REV
SCALE 1"=20'
SHEET NO 151

Plot Driver=$PLTDRV$$ Pentable=PlotStamp.tbl USER = KWARFIEL 4:18:11 PM 5/24/2022 $FILE$

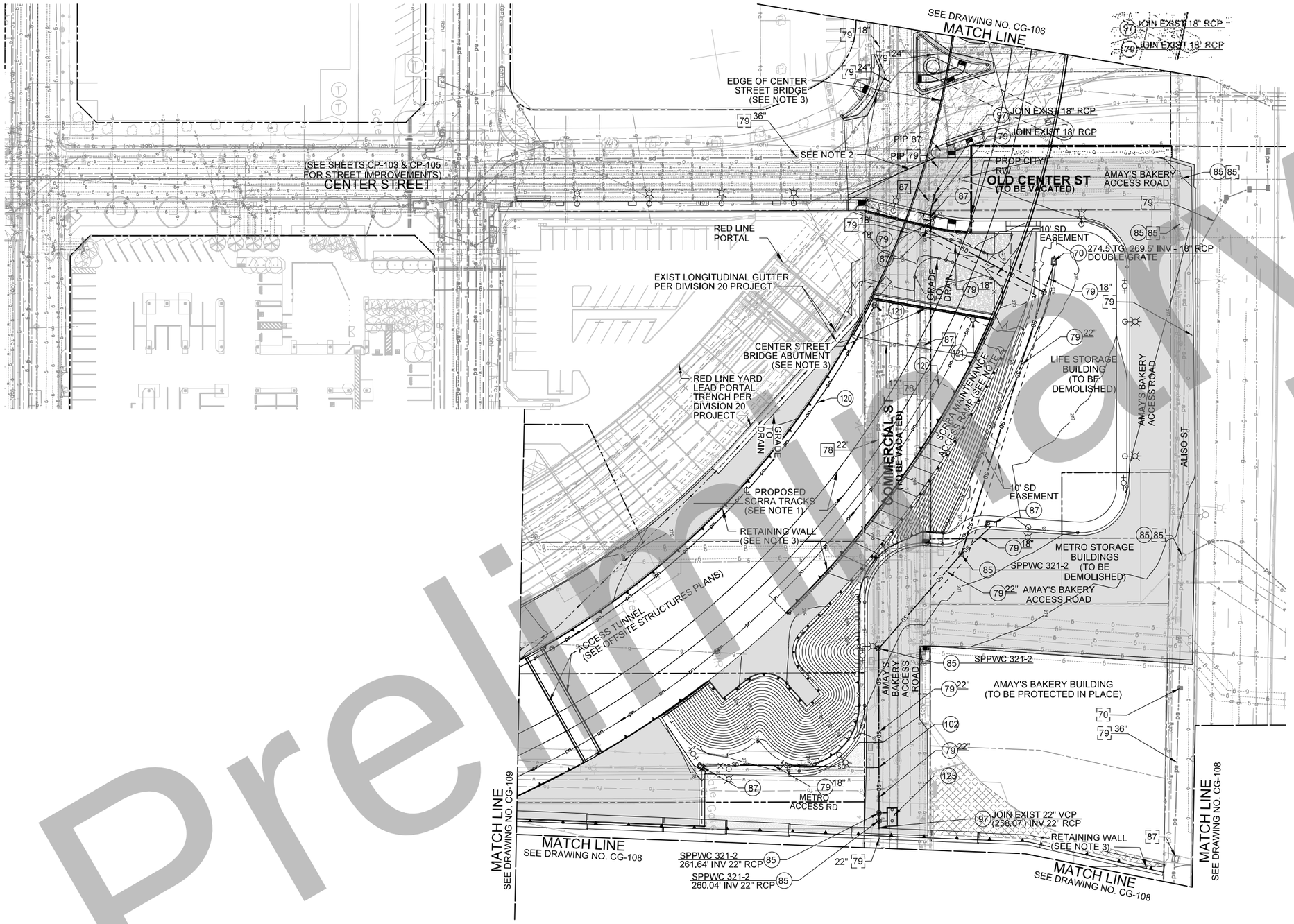

CONSTRUCTION SYMBOLS:

- CONSTRUCT
- REMODEL EXISTING
- EXISTING
- REMOVE AND CONSTRUCT
- REMOVE
- WORK BY OTHERS

CONSTRUCTION NOTES:

49	ROCK LINED DITCH (2' BOTTOM WIDTH, 1' DEEP, SIDE SLOPE 2:1, SMALL ROCK 5")
70	GRATING INLET PER SPPWC 304-3, NO. OF GRATES PER PLAN
71	CURB DRAIN PER SPPWC 151-2
77	BRICK PIPE
78	VITRIFIED CLAY PIPE (VCP)
79	REINFORCED CONCRETE PIPE (RCP)
81	REINFORCED CONCRETE ARCH (RCA)
82	JUNCTION STRUCTURE (J.S.)
85	STORM DRAIN MAINTENANCE HOLE
87	CURB OPENING CATCH BASIN
97	CONCRETE COLLAR FOR STORM DRAIN PIPE
100	FLARE END SECTION PER CALTRANS STD. D94B
101	WALL DRAIN
102	TRANSITION STRUCTURE PER SPPWC 340-2
120	8" PERFORATED PVC (SCH 80) UNDERDRAIN
121	UNDERDRAIN TERMINAL / INTERMEDIATE CLEANOUT
125	STORMWATER BMP (CONTECH STORM FILTER SF806 OR APPROVED EQUAL)

NOTES:

1. SEE TRACK PLANS FOR DETAILS ON PROPOSED SCRRA TRACKS SHOWN HEREIN.
2. SEE ROADWAY PLANS FOR DETAILS ON PROPOSED LOCAL STREET MODIFICATIONS AND REMOVALS.
3. SEE OFFSITE STRUCTURES PLANS FOR DETAILS ON PROPOSED BRIDGES, RETAINING WALLS, AND STORM DRAIN PROTECTION SLAB

40 0 40 80
1"=40'

Preliminary

Original plan submittal made in Aug. 2019

Rev No.	Date	Description
1	3/21	Updated to reflect new Center St Bridge design and Amay's property preservation
2	12/21	
3	6/22	Updated to reflect modified Amay's access road design; scale changed

DESIGNED BY K. WARFIELD
DRAWN BY K. WARFIELD
CHECKED BY M. COOLEY
IN CHARGE T. KIM
DATE 6/01/2022

REGISTERED PROFESSIONAL ENGINEER — No. — Exp. — CIVIL — STATE OF CALIFORNIA

HDR
350 S. GRAND AVE. SUITE 2900
LOS ANGELES, CA 90071
213.239.5800

SUBMITTED: _____ PROJECT MANAGER

Metro

APPROVED: _____

LINK UNION STATION PROJECT

DRAINAGE AND GRADING PLANS
SHEET 7 OF 11

CONTRACT NO.
DRAWING NO.
REVISION
SHEET NO. CG-107
SCALE 1" = 40' 152

5/24/2022 4:35:13 PM
C:\Users\kwarfiel\Documents\Temp_Link\US_PlotStamp.tbl
c:\pwworking\soc\d0603326\SCRIP-11x17bw_pdf.plc\g

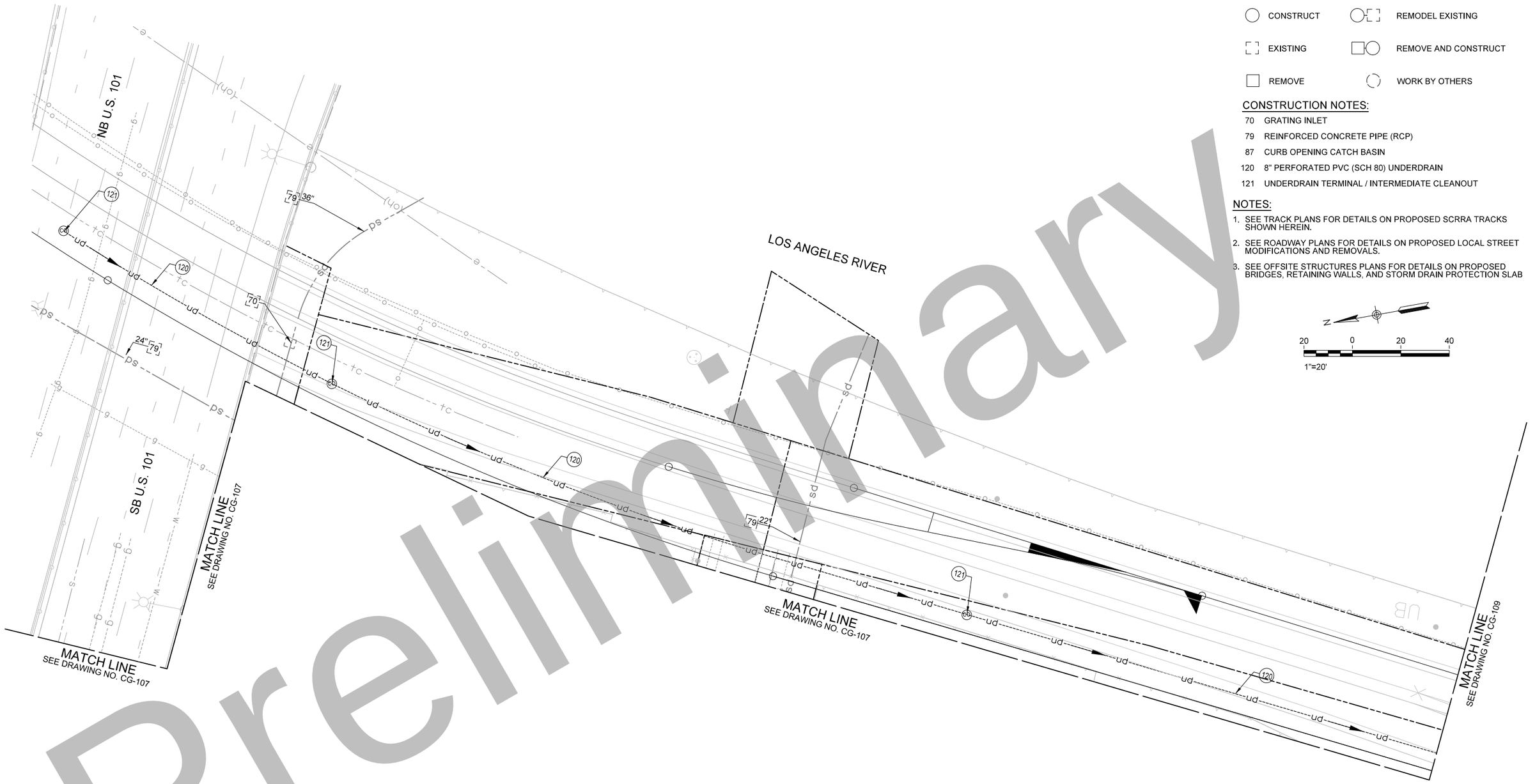

CONSTRUCTION SYMBOLS:

CONSTRUCT	REMODEL EXISTING
EXISTING	REMOVE AND CONSTRUCT
REMOVE	WORK BY OTHERS

CONSTRUCTION NOTES:

70	GRATING INLET
79	REINFORCED CONCRETE PIPE (RCP)
87	CURB OPENING CATCH BASIN
120	8" PERFORATED PVC (SCH 80) UNDERDRAIN
121	UNDERDRAIN TERMINAL / INTERMEDIATE CLEANOUT

NOTES:

1. SEE TRACK PLANS FOR DETAILS ON PROPOSED SCRRA TRACKS SHOWN HEREIN.
2. SEE ROADWAY PLANS FOR DETAILS ON PROPOSED LOCAL STREET MODIFICATIONS AND REMOVALS.
3. SEE OFFSITE STRUCTURES PLANS FOR DETAILS ON PROPOSED BRIDGES, RETAINING WALLS, AND STORM DRAIN PROTECTION SLAB

N

20 0 20 40

1"=20'

Preliminary

35% DESIGN PLANS
NOT FOR CONSTRUCTION

Original plan submittal made in Aug. 2019

Rev No.	Date	Description
1	3/21	Updated to reflect preservation of Amay's property
2	12/21	
3	6/22	Limits changed to reflect added 40 scale sheet

THE PREPARATION OF THIS DRAWING HAS BEEN FINANCED IN PART THROUGH A GRANT FROM THE U.S. DEPARTMENT OF TRANSPORTATION, FEDERAL TRANSIT ADMINISTRATION (FTA), UNDER THE FEDERAL TRANSIT ACT OF 1964, AS AMENDED, AND IN PART BY THE TAXES OF THE CITIZENS OF LOS ANGELES COUNTY AND OF THE STATE OF CALIFORNIA.

DESIGNED BY F. ZHEN
DRAWN BY O. MAUSS
CHECKED BY M. HARROLD
IN CHARGE T. KIM
DATE [redacted]

REGISTERED PROFESSIONAL ENGINEER — No. ____ Exp. ____ CIVIL — STATE OF CALIFORNIA

Metro
LOS ANGELES COUNTY
METROPOLITAN TRANSPORTATION AUTHORITY
HDR
350 S. GRAND AVENUE
SUITE 2900
LOS ANGELES, CA 90071
(213) 239-5800

SUBMITTED: _____ PROJECT MANAGER
APPROVED: _____

LINK UNION STATION PROJECT
DRAINAGE AND GRADING PLANS
SHEET 8 0F 11

CONTRACT NO
DRAWING NO CG-108 REV
SCALE 1"=20'
SHEET NO 153

Plot Driver=$PLTDRV$$ Pentable=PlotStamp.tbl USER = KWARFIEL 11:11:12 AM 5/23/2022 $FILE$

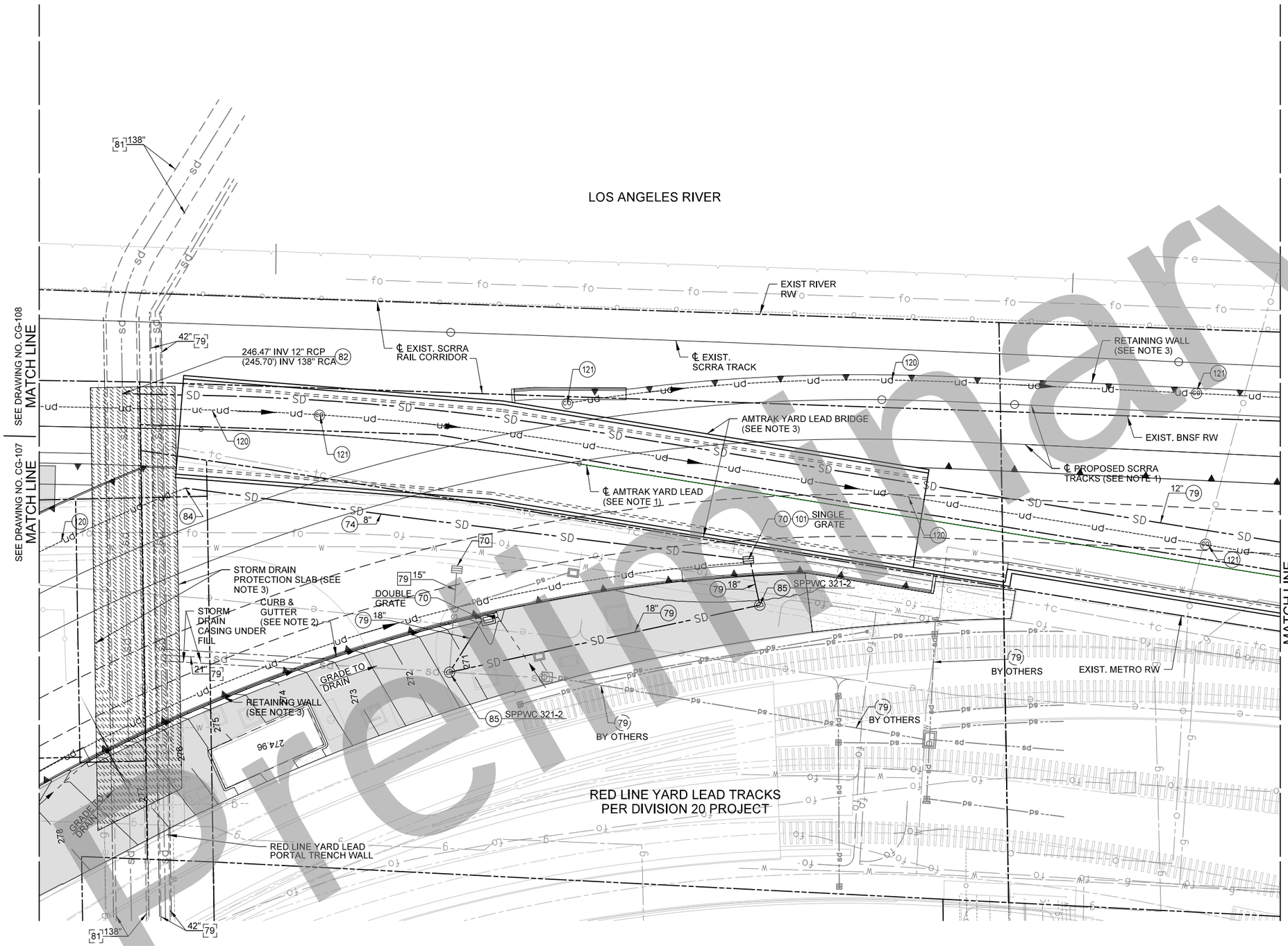

CONSTRUCTION SYMBOLS:

CONSTRUCT	REMODEL EXISTING
EXISTING	REMOVE AND CONSTRUCT
REMOVE	WORK BY OTHERS

CONSTRUCTION NOTES:

49	ROCK LINED DITCH
70	GRATING INLET PER SPPWC 304-3, NO. OF GRATES PER PLAN
74	POLYVINYL CHLORIDE (PVC) (SCH80) PIPE
79	REINFORCED CONCRETE PIPE (RCP)
81	REINFORCED CONCRETE ARCH (RCA)
82	JUNCTION STRUCTURE PER CITY OF LA S-302-1
84	CONNECTING TO 8" STORM DRAIN WITH FITTINGS NEEDED
85	STORM DRAIN MAINTENANCE HOLE PER SPPWC 320-2 OR 321-2 PER PLAN
86	STORM DRAIN CLEANOUT
101	WALL DRAIN
120	8" PERFORATED PVC (SCH 80) UNDERDRAIN
121	UNDERDRAIN TERMINAL / INTERMEDIATE CLEANOUT
122	UNDERDRAIN SADDLE CONNECTION

NOTES:

1. SEE TRACK PLANS FOR DETAILS ON PROPOSED SCRRA TRACKS SHOWN HEREIN.
2. SEE ROADWAY PLANS FOR DETAILS ON PROPOSED LOCAL STREET MODIFICATIONS AND REMOVALS.
3. SEE OFFSITE STRUCTURES PLANS FOR DETAILS ON PROPOSED BRIDGES, RETAINING WALLS, AND STORM DRAIN PROTECTION SLAB

N

20 0 20 40

1"=20'

35% DESIGN PLANS
NOT FOR CONSTRUCTION

Preliminary

Original plan submittal made in Aug. 2019

THE PREPARATION OF THIS DRAWING HAS BEEN FINANCED IN PART THROUGH A GRANT FROM THE U.S. DEPARTMENT OF TRANSPORTATION, FEDERAL TRANSIT ADMINISTRATION (FTA), UNDER THE FEDERAL TRANSIT ACT OF 1964, AS AMENDED, AND IN PART BY THE TAXES OF THE CITIZENS OF LOS ANGELES COUNTY AND OF THE STATE OF CALIFORNIA.

Rev No.	Date	Description
1	3/21	Updated to reflect paving adjacent to portal trench and new signal bungalow location
2	12/21	
3	6/22	Limits changed to reflect added 40 scale sheet

DESIGNED BY F. ZHEN
DRAWN BY O. MAUSS
CHECKED BY M. HARROLD
IN CHARGE T. KIM
DATE

REGISTERED PROFESSIONAL ENGINEER — No. ____ Exp. ____ CIVIL — STATE OF CALIFORNIA

Metro
LOS ANGELES COUNTY
METROPOLITAN TRANSPORTATION AUTHORITY
HDR
350 S. GRAND AVENUE
SUITE 2900
LOS ANGELES, CA 90071
(213) 239-5800

SUBMITTED: _____ PROJECT MANAGER

APPROVED: _____

LINK UNION STATION PROJECT

DRAINAGE AND GRADING PLANS
SHEET 9 0F 11

CONTRACT NO

DRAWING NO CG-109 REV

SCALE 1"=20'

SHEET NO 154

Plot Driver=$PLTDRV$ Pentable=PlotStamp.tbl USER = KWARFIEL 4:58:06 PM 3/7/2022 $FILE$

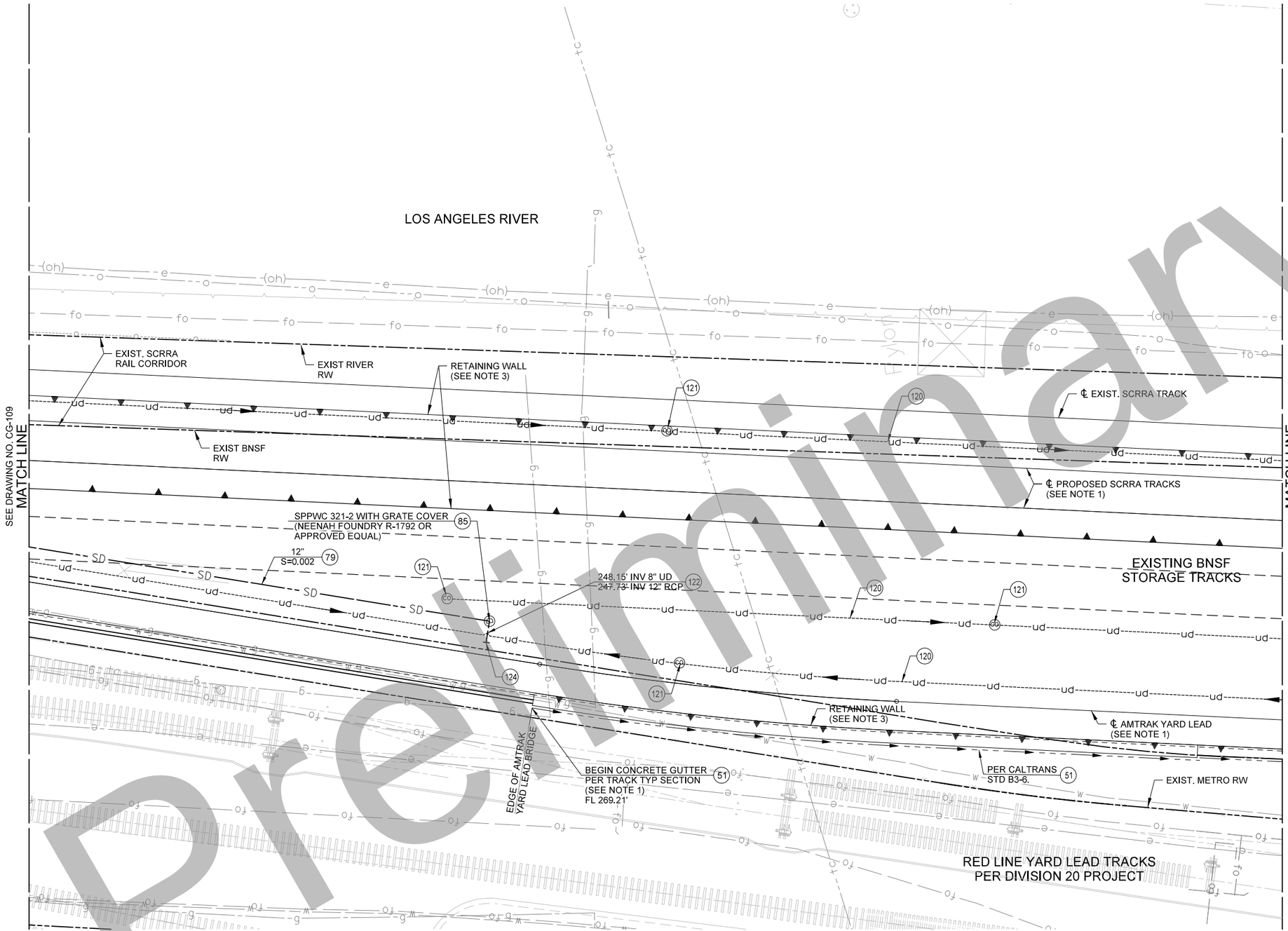

CONSTRUCTION SYMBOLS:

- CONSTRUCT
- REMODEL EXISTING
- EXISTING
- REMOVE AND CONSTRUCT
- REMOVE
- WORK BY OTHERS

CONSTRUCTION NOTES:

51	CONCRETE GUTTER, DETAILS PER PLAN
79	REINFORCED CONCRETE PIPE (RCP)
85	STORM DRAIN MAINTENANCE HOLE PER SPPWC 320-2 OR 321-2 PER PLAN
120	8" PERFORATED PVC (SCH 80) UNDERDRAIN
121	UNDERDRAIN TERMINAL / INTERMEDIATE CLEANOUT
122	UNDERDRAIN SADDLE CONNECTION
124	CONCRETE CAP

NOTES:

1. SEE TRACK PLANS FOR DETAILS ON PROPOSED SCRRA TRACKS SHOWN HEREIN.
2. SEE ROADWAY PLANS FOR DETAILS ON PROPOSED LOCAL STREET MODIFICATIONS AND REMOVALS.
3. SEE OFFSITE STRUCTURES PLANS FOR DETAILS ON PROPOSED BRIDGES, RETAINING WALLS, AND STORM DRAIN PROTECTION SLAB

N

20 0 20 40

1"=20'

35% DESIGN PLANS
NOT FOR CONSTRUCTION

Preliminary

Original plan submittal made in Aug. 2019

THE PREPARATION OF THIS DRAWING HAS BEEN FINANCED IN PART THROUGH A GRANT FROM THE U.S. DEPARTMENT OF TRANSPORTATION, FEDERAL TRANSIT ADMINISTRATION (FTA), UNDER THE FEDERAL TRANSIT ACT OF 1964, AS AMENDED, AND IN PART BY THE TAXES OF THE CITIZENS OF LOS ANGELES COUNTY AND OF THE STATE OF CALIFORNIA.

Rev No.	Date	Description
1	3/21	Updated to reflect modified retaining wall layout
2	12/21	
3	6/22	

DESIGNED BY F. ZHEN
DRAWN BY O. MAUSS
CHECKED BY M. HARROLD
IN CHARGE T. KIM
DATE 3/05/2021

REGISTERED PROFESSIONAL ENGINEER — No. — EXP. — CIVIL — STATE OF CALIFORNIA

Metro
LOS ANGELES COUNTY METROPOLITAN TRANSPORTATION AUTHORITY
HDR
350 S. GRAND AVENUE SUITE 2900 LOS ANGELES, CA 90071 (213) 239-5800

SUBMITTED: _____ PROJECT MANAGER

APPROVED: _____

LINK UNION STATION PROJECT

DRAINAGE AND GRADING PLANS SHEET 10 0F 11

CONTRACT NO

DRAWING NO CG-110 | REV

SCALE 1"=20'

SHEET NO 155

Plot Driver=$PLTDRVS$ Pentable=PlotStamp.tbl USER = KWARFIEL 4:28:57 PM 3/7/2022 $FILE$

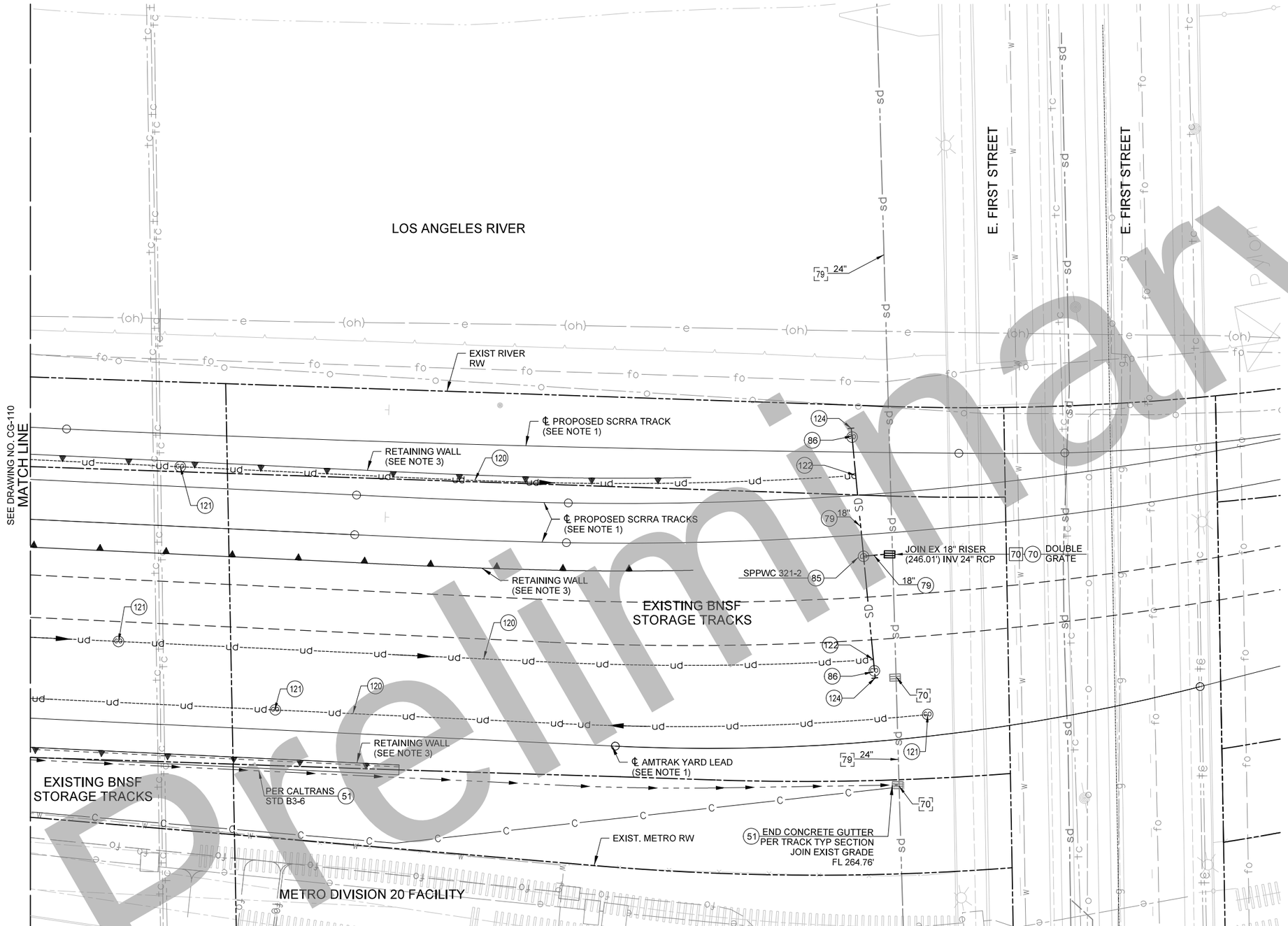

CONSTRUCTION SYMBOLS:

- CONSTRUCT
- REMODEL EXISTING
- EXISTING
- REMOVE AND CONSTRUCT
- REMOVE
- WORK BY OTHERS

CONSTRUCTION NOTES:

51	CONCRETE GUTTER, DETAILS PER PLAN
70	GRATING INLET PER SPPWC 304-3, NO. OF GRATES PER PLAN
79	REINFORCED CONCRETE PIPE (RCP)
85	STORM DRAIN MAINTENANCE HOLE PER SPPWC 320-2 OR 321-2 PER PLAN
86	STORM DRAIN CLEANOUT
120	8" PERFORATED PVC (SCH 80) UNDERDRAIN
121	UNDERDRAIN TERMINAL / INTERMEDIATE CLEANOUT
122	UNDERDRAIN SADDLE CONNECTION
124	CONCRETE CAP

NOTES:

1. SEE TRACK PLANS FOR DETAILS ON PROPOSED SCRRA TRACKS SHOWN HEREIN.
2. SEE ROADWAY PLANS FOR DETAILS ON PROPOSED LOCAL STREET MODIFICATIONS AND REMOVALS.
3. SEE OFFSITE STRUCTURES PLANS FOR DETAILS ON PROPOSED BRIDGES, RETAINING WALLS, AND STORM DRAIN PROTECTION SLAB

20 0 20 40

1"=20'

35% DESIGN PLANS
NOT FOR CONSTRUCTION

Preliminary

Original plan submittal made in Aug. 2019

THE PREPARATION OF THIS DRAWING HAS BEEN FINANCED IN PART THROUGH A GRANT FROM THE U.S. DEPARTMENT OF TRANSPORTATION, FEDERAL TRANSIT ADMINISTRATION (FTA), UNDER THE FEDERAL TRANSIT ACT OF 1964, AS AMENDED, AND IN PART BY THE TAXES OF THE CITIZENS OF LOS ANGELES COUNTY AND OF THE STATE OF CALIFORNIA.

Rev No.	Date	Description
1	3/21	Updated to reflect modified retaining wall layout
2	12/21	
3	6/22	

DESIGNED BY F. ZHEN
DRAWN BY O. MAUSS
CHECKED BY M. HARROLD
IN CHARGE T. KIM
DATE 3/05/2021

REGISTERED PROFESSIONAL ENGINEER — No. ____ Exp. ____ CIVIL — STATE OF CALIFORNIA

Metro
LOS ANGELES COUNTY
METROPOLITAN TRANSPORTATION AUTHORITY
HDR
350 S. GRAND AVENUE
SUITE 2900
LOS ANGELES, CA 90071
(213) 239-5800

SUBMITTED: _____ PROJECT MANAGER

APPROVED: _____

LINK UNION STATION PROJECT

DRAINAGE AND GRADING PLANS
SHEET 11 0F 11

CONTRACT NO

DRAWING NO CG-111 | REV

SCALE 1"=20'

SHEET NO 156

Plot Driver=$PLTDRV$$ Pentable=PlotStamp.tbl USER = KWARFIEL 3:01:19 PM 3/9/2022 $FILE$

Build Alternative Phase B - Index and Plan Sheets

(THIS PAGE INTENTIONALLY LEFT BLANK)

LINK UNION STATION DRAFT EIS/SEIR BUILD ALTERNATIVE PHASE B PLAN SHEETS

GENERAL		
SHEET NO.	DRAWING NO.	DRAWING TITLE
1		COVER SHEET
TRACK		
SHEET NO.	DRAWING NO.	DRAWING TITLE
2	TK-001	TRACK DRAWINGS - KEY MAP
3	TS-001	TRACK DRAWINGS - TRACK TYPICAL SECTIONS SHEET 1 OF 3
4	TS-002	TRACK DRAWINGS - TRACK TYPICAL SECTIONS SHEET 2 OF 3
5	TS-003	TRACK DRAWINGS - TRACK TYPICAL SECTIONS SHEET 3 OF 3
6	TR-101	TRACK DRAWINGS - CP MISSION WEST BANK CONNECTION AND TRACK PLAN
7	TR-102	TRACK DRAWINGS - TRACK PLAN AND PROFILE RR1 STA 81+94.65 TO RR1 STA 89+00 CP MISSION CONTINUED
8	TR-103	TRACK DRAWINGS - TRACK PLAN AND PROFILE RR1 STA 89+00 TO RR1 STA 101+00
9	TR-104	TRACK DRAWINGS - RR1 STA 101+00 TO RR1 STA 113+00 TRACK PLAN
10	TR-105	TRACK DRAWINGS - TRACK PROFILE RR1 STA 101+00 TO RR1 STA 113+00
11	TR-106	TRACK DRAWINGS - RR1 STA 113+00 TO RR1 STA 120+00 TRACK PLAN AND PROFILE
12	TR-107	TRACK DRAWINGS - RR1 STA 120+00 TO RR1 STA 128+00 TRACK PLAN AND PROFILE
13	TP-108	TRACK DRAWINGS - RR1 STA 128+00 TO RR1 STA 132+00 TRACK PLAN AND PROFILE
14	TP-109	TRACK DRAWINGS - RR1 STA 132+00 TO RR1 STA 144+00 TRACK PLAN AND PROFILE
15	TP-110	TRACK DRAWINGS - RR1 STA 144+00 TO RR1 148+24.66 TRACK PLAN AND PROFILE
16	TR-111	TRACK DRAWINGS - GOLD LINE KEY MAP
17	TR-112	TRACK DRAWINGS - GOLD LINE PLAN AND PROFILE GL STA 107+52.83 TO GL STA 113+49.51
STRUCTURES		
SHEET NO.	DRAWING NO.	DRAWING TITLE
18	ST-000	OFFSITE STRUCTURES - KEY MAP
19	ST-001	CONCEPTUAL GENERAL PLAN - NO.1 OFFSITE STRUCTURES - CESAR CHAVEZ AVE BRIDGE CONCEPTUAL GENERAL PLAN - NO. 1 CESAR CHAVEZ AVE BRIDGE
20	ST-002	CONCEPTUAL GENERAL PLAN - NO.2 OFFSITE STRUCTURES - CESAR CHAVEZ AVE BRIDGE CONCEPTUAL GENERAL PLAN - NO. 2 CESAR CHAVEZ AVE BRIDGE
21	ST-003	CONCEPTUAL GENERAL PLAN - VIGNES ST BRIDGE
22	SW-001	AVILA ST RETAINING WALL - GENERAL PLAN
23	SW-002	AVILA ST RETAINING WALL - RETROFIT TIEBACK ANCHORS DETAILS
ARCHITECTURE		
SHEET NO.	DRAWING NO.	DRAWING TITLE
24	AX-001	ARCHITECTURAL DRAWINGS - DEMOLITION PLAN - PASSAGEWAY LEVEL
25	AX-002	ARCHITECTURAL DRAWINGS - DEMOLITION PLAN - PLATFORM LEVEL
26	A-000	ARCHITECTURAL DRAWINGS - SITE PLAN
27	A-010	ARCHITECTURAL DRAWINGS - OVERALL PASSAGEWAY PLAN
28	A-011	ARCHITECTURAL DRAWINGS - PASSAGEWAY PLAN
29	A-012	ARCHITECTURAL DRAWINGS - PASSAGEWAY PLAN
30	A-020	ARCHITECTURAL DRAWINGS - OVERALL PLATFORM LEVEL PLAN
31	A-021	ARCHITECTURAL DRAWINGS - PLATFORM PLAN
32	A-022	ARCHITECTURAL DRAWINGS - PLATFORM PLAN
33	A-023	ARCHITECTURAL DRAWINGS - PLATFORM PLAN
34	A-024	ARCHITECTURAL DRAWINGS - PLATFORM PLAN
35	A-300	ARCHITECTURAL DRAWINGS - OVERALL SITE SECTIONS
36	A-310	ARCHITECTURAL DRAWINGS - TYPICAL PLATFORM SECTIONS
37	L-001	LANDSCAPE NOTES & MATERIALS
38	L-101	WEST PLAZA SITE PLAN
39	L-300	PLAZA SITE SECTIONS
CIVIL AND ROADWAY		
SHEET NO.	DRAWING NO.	DRAWING TITLE
40	C-001	ONSITE - CIVIL PLAN PHASE B
41	C-002	ONSITE - CIVIL PLAN PHASE B
42	C-003	ONSITE - CIVIL PLAN PHASE B

43	CR-201	ONSITE - CIVIL PLAN PHASE B ACCESS ROAD PROFILE
44	CR-202	ONSITE - CIVIL PLAN PHASE B ACCESS ROAD PROFILE
45	CR-301	ONSITE - CIVIL PLAN PHASE B CROSS SECTION
46	CR-302	ONSITE - CIVIL PLAN PHASE B CROSS SECTION
47	CR-303	EXISTING FACILITIES - DISPOSITION PLAN PHASE B CROSS SECTION
UTILITIES		
SHEET NO.	DRAWING NO.	DRAWING TITLE
48	CU-211	CIVIL DRAWINGS - STATION EXISTING UTILITY PLAN - 1
49	CU-212	CIVIL DRAWINGS - STATION EXISTING UTILITY PLAN - 2
50	CU-213	CIVIL DRAWINGS - STATION EXISTING UTILITY PLAN - 3
51	CU-214	CIVIL DRAWINGS - STATION EXISTING UTILITY TABLE - 1
52	CU-215	CIVIL DRAWINGS - STATION EXISTING UTILITY TABLE - 2
53	CU-221	CIVIL DRAWINGS - STATION PROPOSED UTILITY PLAN - 1
54	CU-222	CIVIL DRAWINGS - STATION PROPOSED UTILITY PLAN - 2
55	CU-223	CIVIL DRAWINGS - STATION PROPOSED UTILITY PLAN - 3
56	UG-102	UTILITIES OFFSITE - UTILITIES - KEY MAP
57	CU-101	COMPOSITE UTIILITY PLANSOFFSITE - UTILITIES COMPOSITE UTILITY PLANS - SHEET 1 OF 8
58	CU-102	COMPOSITE UTIILITY PLANSOFFSITE - UTILITIES COMPOSITE UTILITY PLANS - SHEET 2 OF 8
59	CU-103	COMPOSITE UTIILITY PLANSOFFSITE - UTILITIES COMPOSITE UTILITY PLANS - SHEET 3 OF 8
60	CU-104	COMPOSITE UTIILITY PLANSOFFSITE - UTILITIES COMPOSITE UTILITY PLANS - SHEET 4 OF 8
61	CU-121	COMPOSITE UTIILITY IMPACT PLANS OFFSITE - UTILITIES COMPOSITE UTILITY IMPACT PLANS - SHEET 5 OF 8
62	CU-122	COMPOSITE UTIILITY IMPACT PLANS OFFSITE - UTILITIES COMPOSITE UTILITY IMPACT PLANS - SHEET 6 OF 8
63	CU-123	COMPOSITE UTIILITY IMPACT PLANS OFFSITE - UTILITIES COMPOSITE UTILITY IMPACT PLANS - SHEET 7 OF 8
64	CU-124	COMPOSITE UTIILITY IMPACT PLANS OFFSITE - UTILITIES COMPOSITE UTILITY IMPACT PLANS - SHEET 8 OF 8
DRAINAGE		
SHEET NO.	DRAWING NO.	DRAWING TITLE
65	CG-231	CIVIL DRAWINGS - STATION DRAINAGE PLAN - 1
66	CG-232	CIVIL DRAWINGS - STATION DRAINAGE PLAN - 2
67	CG-233	CIVIL DRAWINGS - STATION DRAINAGE PLAN - 3
68	CG-002	DRAINAGE OFFSITE - DRAINAGE - OFFSITE DRAINAGE KEY MAP
69	CG-101	DRAINAGE OFFSITE - DRAINAGE - SHEET 1 OF 4 TRACK DRAINAGE PLAN
70	CG-102	DRAINAGE OFFSITE - DRAINAGE - SHEET 2 OF 4 TRACK DRAINAGE PLAN
71	CG-103	DRAINAGE OFFSITE - DRAINAGE - SHEET 3 OF 4 TRACK DRAINAGE PLAN
72	CG-104	DRAINAGE OFFSITE - DRAINAGE - SHEET 4 OF 4 TRACK DRAINAGE PLAN

LINK UNION STATION PROJECT

CONTRACT NUMBER PS2415-3172

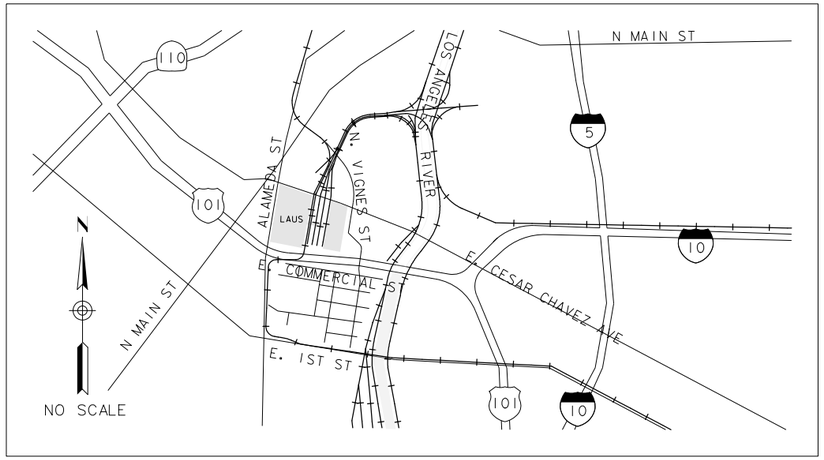

LOCATION MAP

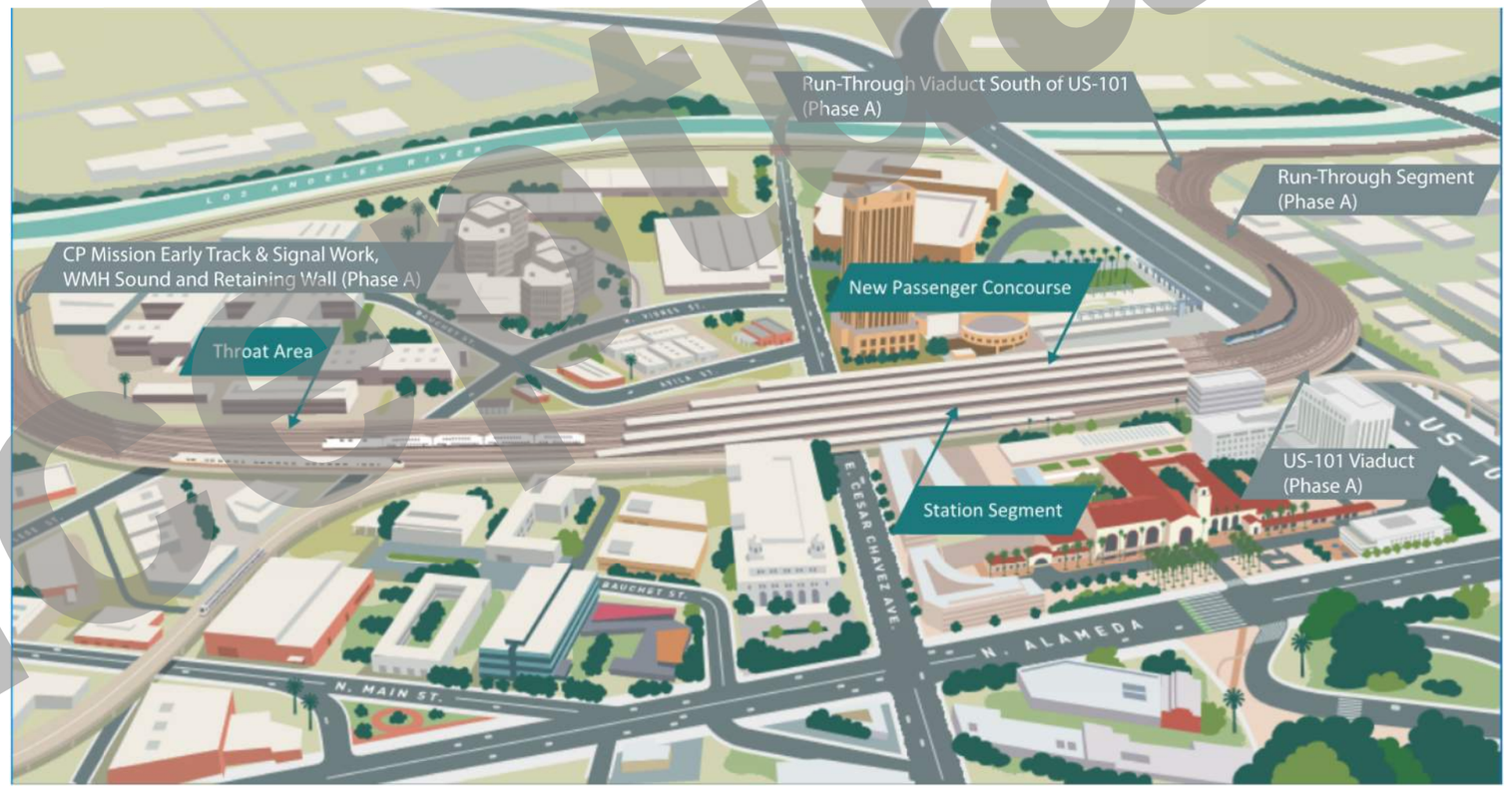

Metro

CONCEPTUAL PHASE B DESIGN SUBMITTAL
NOT FOR CONSTRUCTION
(IN SUPPORT OF CMGC PROCUREMENT)
JULY 2021

LOS ANGELES COUNTY METROPOLITAN TRANSPORTATION AUTHORITY

HDR

Conceptual

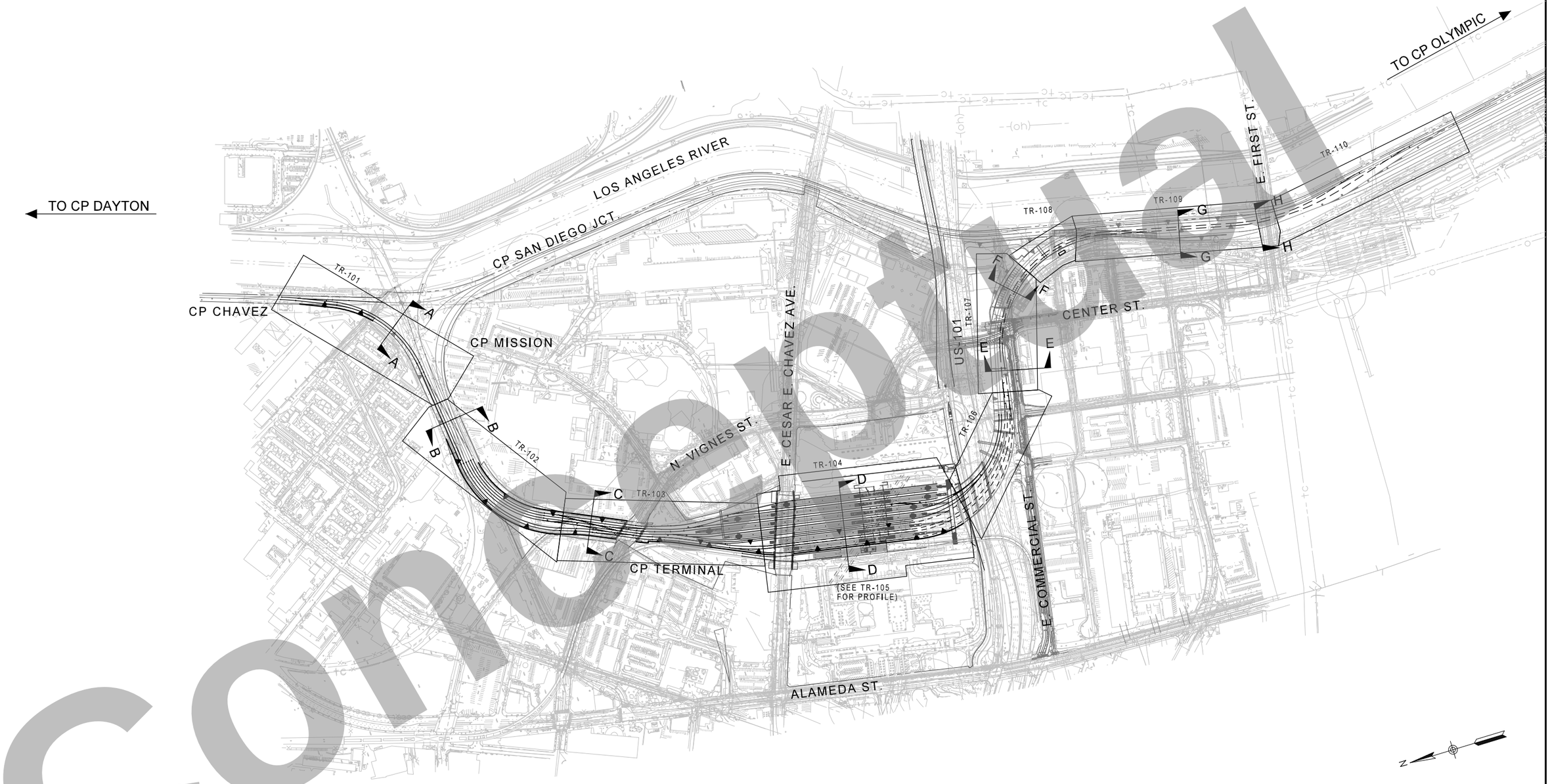

AML ACNRS C EL S GRR
LMR MP AML RPSARGML

Concept

THE PREPARATION OF THIS DRAWING HAS BEEN FINANCED IN PART THROUGH A GRANT FROM THE U.S. DEPARTMENT OF TRANSPORTATION, FEDERAL TRANSIT ADMINISTRATION (FTA), UNDER THE FEDERAL TRANSIT ACT OF 1964, AS AMENDED, AND IN PART BY THE TAXES OF THE CITIZENS OF LOS ANGELES COUNTY AND OF THE STATE OF CALIFORNIA.

REV	DATE	BY	APP	REG NO	EXPIRES	SEAL HOLDER	DESCRIPTION

DESIGNED BY Z. MACDONELL
DRAWN BY M. SHAHIN
CHECKED BY A. MULL
IN CHARGE T. KIM
DATE 7/13/2021

REGISTERED PROFESSIONAL ENGINEER — No. Exp. CIVIL — STATE OF CALIFORNIA

Metro
LOS ANGELES COUNTY
METROPOLITAN TRANSPORTATION AUTHORITY

HDR ENGINEERING
350 S. GRAND AVENUE
SUITE 2900
LOS ANGELES, CA 90071
(213) 239-5800

SUBMITTED: _____ PROJECT MANAGER
APPROVED: _____

LINK UNION STATION PROJECT
TRACK DRAWINGS
KEY MAP

CONTRACT NO
DRAWING NO TK-001 REV
SCALE HORIZ: 1"=300'
SHEET NO 2 of 72

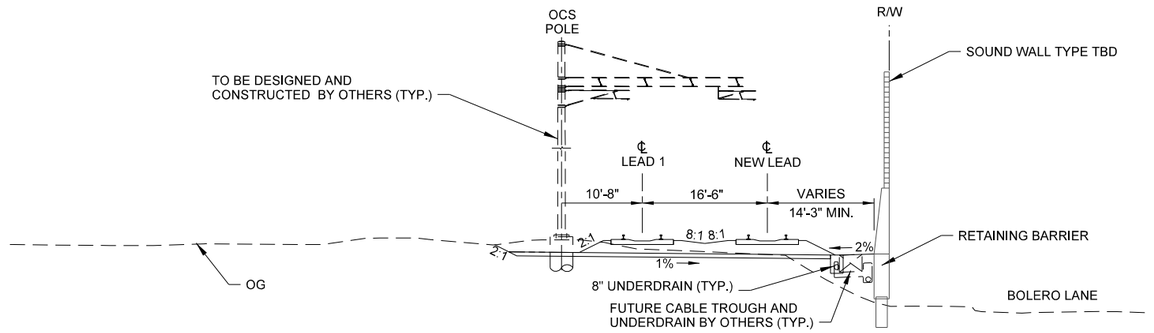

SECTION AT CP MISSION

NO SCALE

A-A

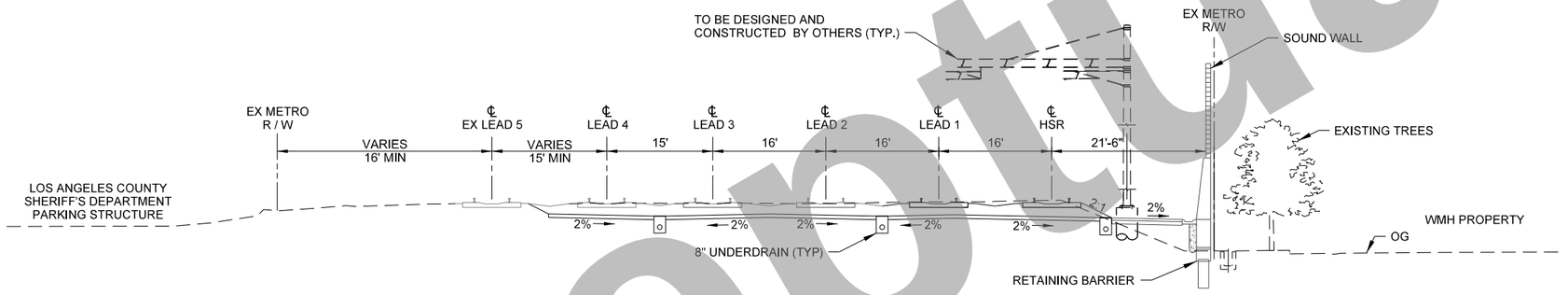

SECTION AT CP MISSION

NO SCALE

B-B

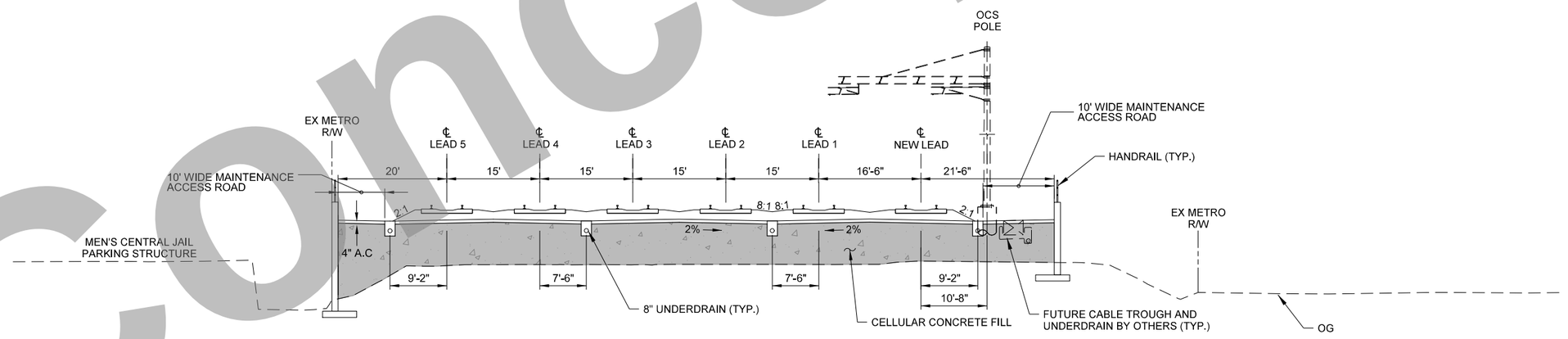

SECTION AT CP TERMINAL

NO SCALE

C-C

AML ACNRS C EL S GRR
LMR MP AML RPSARGML

Conceptual

THE PREPARATION OF THIS DRAWING HAS BEEN FINANCED IN PART THROUGH A GRANT FROM THE U.S. DEPARTMENT OF TRANSPORTATION, FEDERAL TRANSIT ADMINISTRATION (FTA), UNDER THE FEDERAL TRANSIT ACT OF 1964, AS AMENDED, AND IN PART BY THE TAXES OF THE CITIZENS OF LOS ANGELES COUNTY AND OF THE STATE OF CALIFORNIA.

REV	DATE	BY	APP	REG NO	EXPIRES	SEAL HOLDER	DESCRIPTION

DESIGNED BY Z. MACDONELL
DRAWN BY M. SHAHIN
CHECKED BY A. MULL
IN CHARGE T. KIM
DATE 7/13/2021

REGISTERED PROFESSIONAL ENGINEER — No. — EXP. — CIVIL — STATE OF CALIFORNIA

Metro

LOS ANGELES COUNTY
METROPOLITAN TRANSPORTATION AUTHORITY

HDR ENGINEERING
350 S. GRAND AVENUE
SUITE 2900
LOS ANGELES, CA 90071
(213) 239-5800

SUBMITTED: _____ PROJECT MANAGER

APPROVED: _____

LINK UNION STATION PROJECT

TRACK DRAWINGS
TRACK TYPICAL SECTIONS
SHEET 1 OF 3

CONTRACT NO

DRAWING NO TS-001 | REV

SCALE AS NOTED

SHEET NO 3 of 72

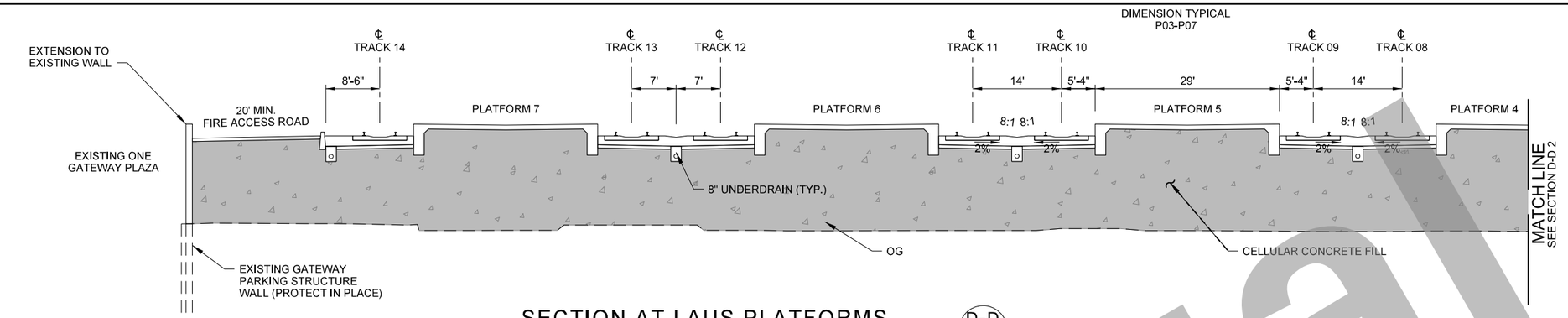

SECTION AT LAUS PLATFORMS

NO SCALE

D-D 1

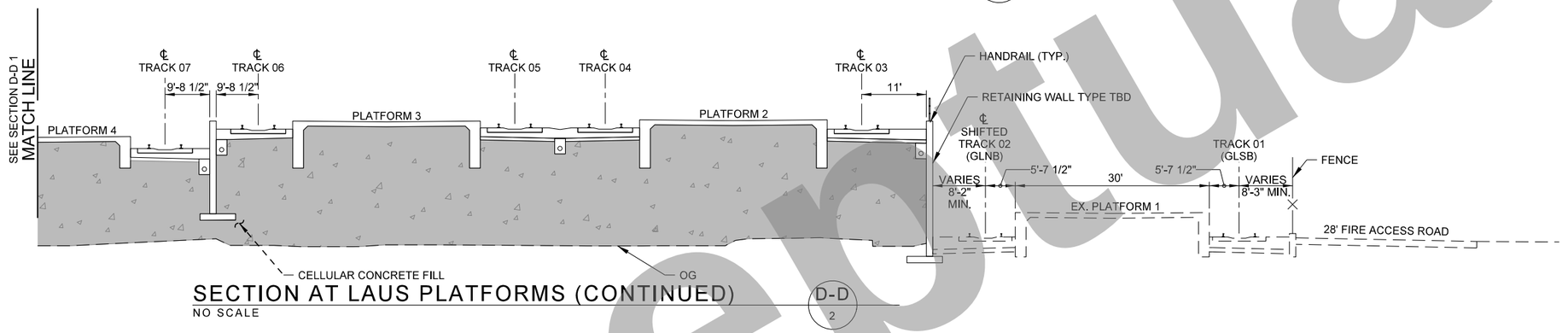

SECTION AT LAUS PLATFORMS (CONTINUED)

NO SCALE

D-D 2

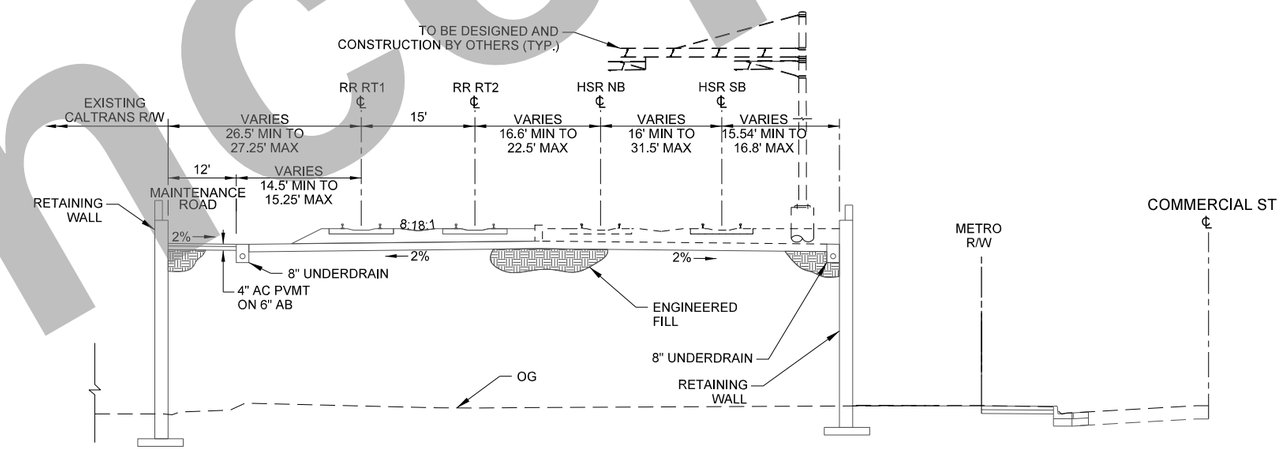

2-TRACK REGIONAL RAIL RETAINED FILL-SECTION

NO SCALE

E-E

-

NOTES:

1. SEE LINK UNION STATION PHASE A STRUCTURES PLAN FOR BRIDGE SECTIONS OVER US-101
2. SEE ARCHITECTURAL DRAWINGS FOR PLATFORM RELATED WORK

15% DESIGN PLANS
NOT FOR CONSTRUCTION

Conceptual

THE PREPARATION OF THIS DRAWING HAS BEEN FINANCED IN PART THROUGH A GRANT FROM THE U.S. DEPARTMENT OF TRANSPORTATION, FEDERAL TRANSIT ADMINISTRATION (FTA), UNDER THE FEDERAL TRANSIT ACT OF 1964, AS AMENDED, AND IN PART BY THE TAXES OF THE CITIZENS OF LOS ANGELES COUNTY AND OF THE STATE OF CALIFORNIA.

REV	DATE	BY	APP	REG NO	EXPIRES	SEAL HOLDER	DESCRIPTION

DESIGNED BY: Z. MACDONELL
DRAWN BY: M. SHAHIN
CHECKED BY: A. MULL
IN CHARGE: T. KIM
DATE: 7/13/2021

REGISTERED PROFESSIONAL ENGINEER — No. — Exp. — CIVIL — STATE OF CALIFORNIA

Metro

LOS ANGELES COUNTY
METROPOLITAN TRANSPORTATION AUTHORITY

HDR ENGINEERING
350 S. GRAND AVENUE
SUITE 2900
LOS ANGELES, CA 90071
(213) 239-5800

SUBMITTED: _____ PROJECT MANAGER

APPROVED: _____

LINK UNION STATION PROJECT

TRACK DRAWINGS
TRACK TYPICAL SECTIONS
SHEET 2 OF 3

CONTRACT NO

DRAWING NO: TS-002 | REV

SCALE: AS NOTED

SHEET NO: 4 of 72

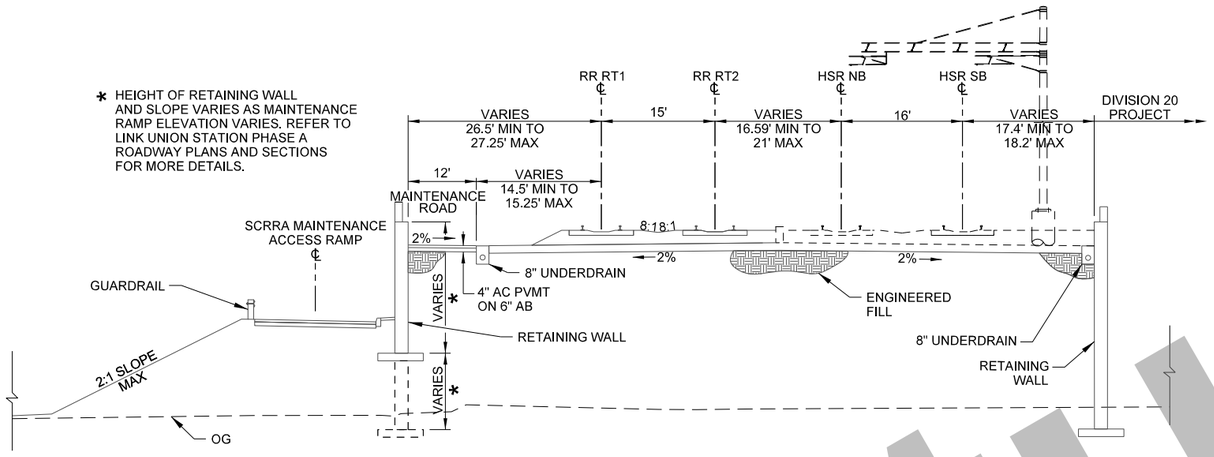

RETAINED FILL-SECTION WITH ACCESS ROAD F-F

NO SCALE

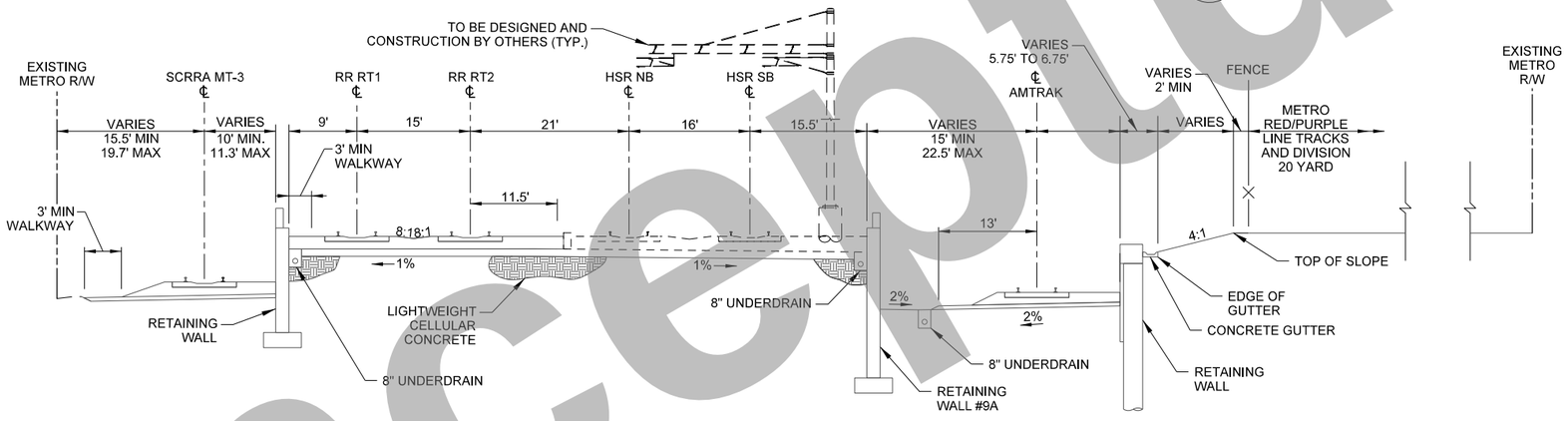

WEST BANK NORTH OF 1ST STREET G-G

NO SCALE

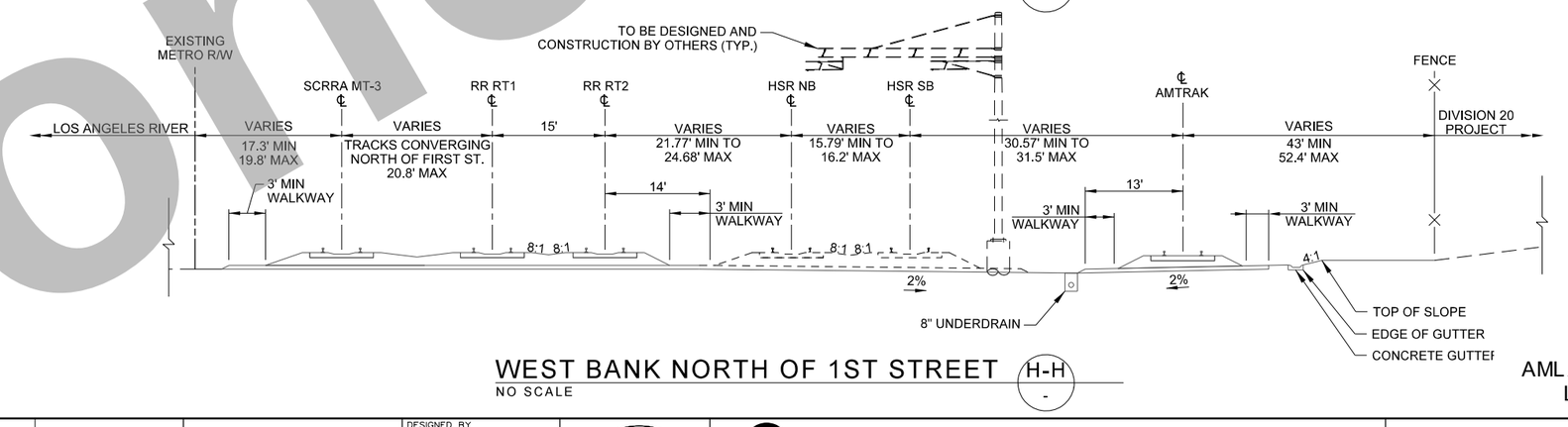

WEST BANK NORTH OF 1ST STREET H-H

NO SCALE

AML ACNRS C ℄EL S ℄RR
LMR MP AML RPSAR℄ML

Conceptual

THE PREPARATION OF THIS DRAWING HAS BEEN FINANCED IN PART THROUGH A GRANT FROM THE U.S. DEPARTMENT OF TRANSPORTATION, FEDERAL TRANSIT ADMINISTRATION (FTA), UNDER THE FEDERAL TRANSIT ACT OF 1964, AS AMENDED, AND IN PART BY THE TAXES OF THE CITIZENS OF LOS ANGELES COUNTY AND OF THE STATE OF CALIFORNIA.

REV	DATE	BY	APP	REG NO	EXPIRES	SEAL HOLDER	DESCRIPTION

DESIGNED BY Z. MACDONELL
DRAWN BY M. SHAHIN
CHECKED BY A. MULL
IN CHARGE T. KIM
DATE 7/13/2021

REGISTERED PROFESSIONAL ENGINEER — No. Exp. CIVIL — STATE OF CALIFORNIA

Metro
LOS ANGELES COUNTY
METROPOLITAN TRANSPORTATION AUTHORITY

HDR ENGINEERING
350 S. GRAND AVENUE
SUITE 2900
LOS ANGELES, CA 90071
(213) 239-5800

SUBMITTED: _____ PROJECT MANAGER
APPROVED: _____

LINK UNION STATION PROJECT
TRACK DRAWINGS
TRACK TYPICAL SECTIONS
SHEET 3 OF 3

CONTRACT NO
DRAWING NO TS-003 REV
SCALE AS NOTED
SHEET NO 5 of 72

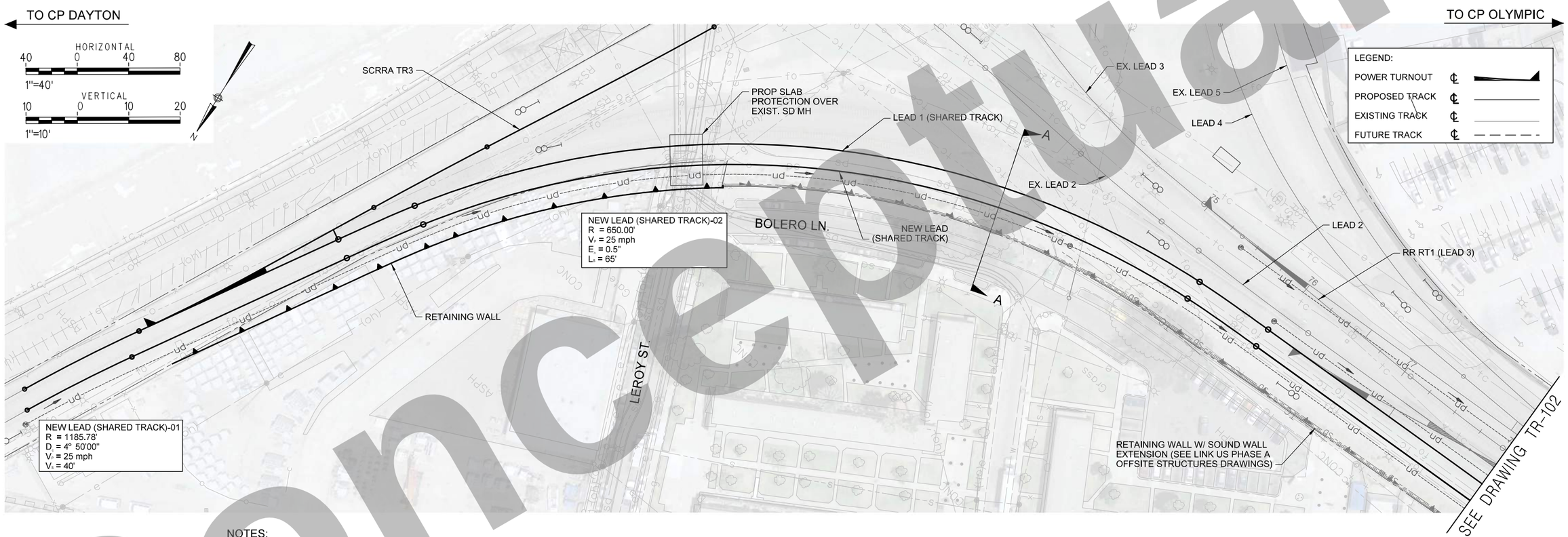

NOTES:

1. PAVED TRUCK CROSSING LOCATIONS TBD
2. EXISTING CONDITION INCLUDING SPECIAL TRACKWORK AND TRACK SIGNALS AT CP MISSION, REFLECTS CONSTRUCTION OF THE UNION STATION MODERNIZATION PROJECT AND PHASE A OF THE LINK UNION STATION PROJECT
3. STATIONING AND PROFILE GRADES ARE BASED ON LEAD TRACK 3, INCLUDING PORTION COMPLETED IN PHASE A OF LINK UNION STATION. ELEVATION OF ALL OTHER TRACKS IS EQUAL TO PERPENDICULAR HORIZONTAL PROJECTION OF LEAD 3 UNLESS NOTED OTHERWISE

AML ACNRS C EL S GRR
LMR MP AML RPSARGML

Conceptual

THE PREPARATION OF THIS DRAWING HAS BEEN FINANCED IN PART THROUGH A GRANT FROM THE U.S. DEPARTMENT OF TRANSPORTATION, FEDERAL TRANSIT ADMINISTRATION (FTA), UNDER THE FEDERAL TRANSIT ACT OF 1964, AS AMENDED, AND IN PART BY THE TAXES OF THE CITIZENS OF LOS ANGELES COUNTY AND OF THE STATE OF CALIFORNIA.

REV	DATE	BY	APP	REG NO	EXPIRES	SEAL HOLDER	DESCRIPTION

DESIGNED BY Z. MACDONELL
DRAWN BY M. SHAHIN
CHECKED BY A. MULL
IN CHARGE T. KIM
DATE 7/13/2021

REGISTERED PROFESSIONAL ENGINEER — No. — Exp. — CIVIL — STATE OF CALIFORNIA

Metro
LOS ANGELES COUNTY
METROPOLITAN TRANSPORTATION AUTHORITY
HDR
HDR ENGINEERING
350 S. GRAND AVENUE
SUITE 2900
LOS ANGELES, CA 90071
(213) 239-5800

SUBMITTED: _____ PROJECT MANAGER
APPROVED: _____

LINK UNION STATION PROJECT

TRACK DRAWINGS
TRACK PLAN
WEST BANK CONNECTION AND CP MISSION

CONTRACT NO
DRAWING NO TR-101
REV
SCALE HORIZ: 1"=40' VERT: 1"=10'
SHEET NO 6 of 72

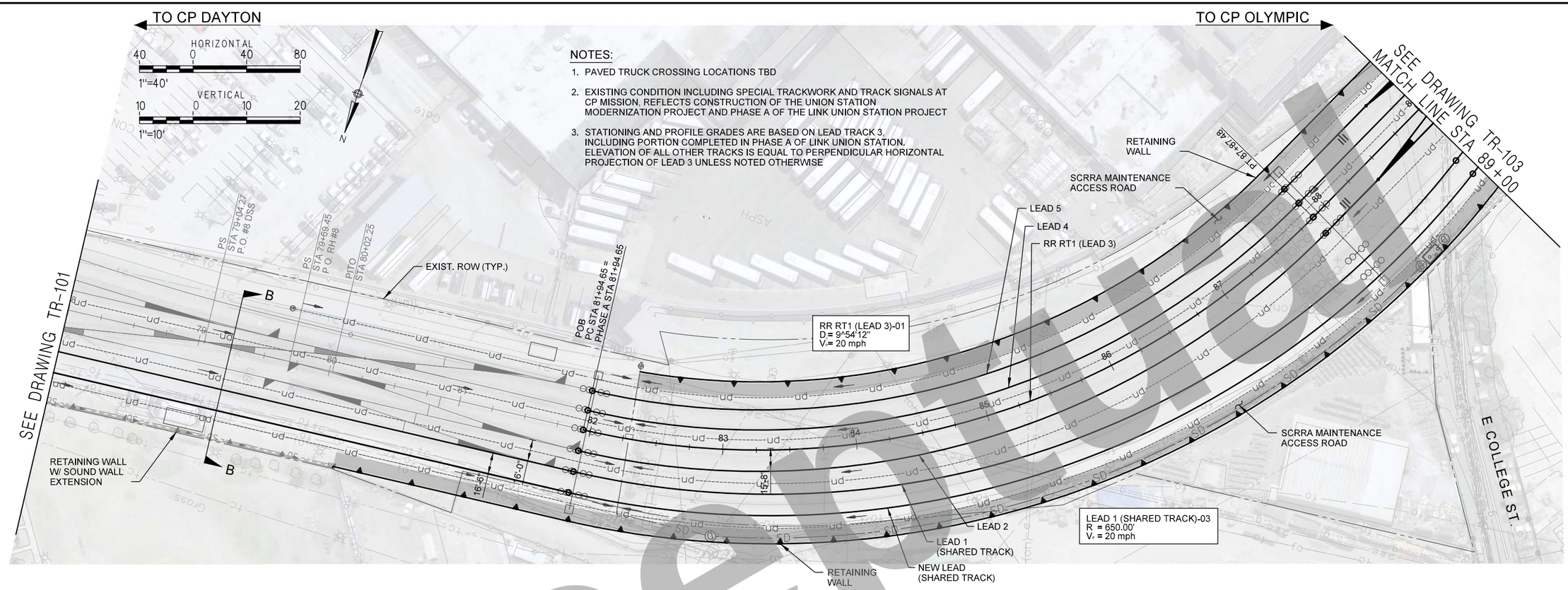

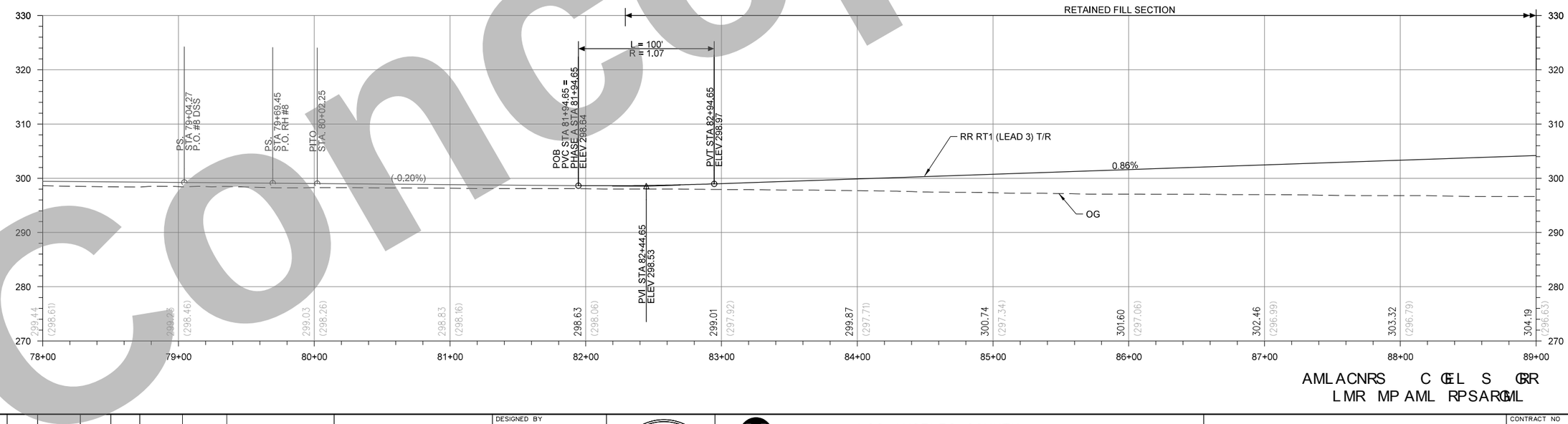

AMLACNRS C CEL S GRR
LMR MP AML RPSARGML

Concept

THE PREPARATION OF THIS DRAWING HAS BEEN FINANCED IN PART THROUGH A GRANT FROM THE U.S. DEPARTMENT OF TRANSPORTATION, FEDERAL TRANSIT ADMINISTRATION (FTA), UNDER THE FEDERAL TRANSIT ACT OF 1964, AS AMENDED, AND IN PART BY THE TAXES OF THE CITIZENS OF LOS ANGELES COUNTY AND OF THE STATE OF CALIFORNIA.

REV	DATE	BY	APP	REG NO	EXPIRES	SEAL HOLDER	DESCRIPTION

DESIGNED BY: Z. MACDONELL
DRAWN BY: M. SHAHIN
CHECKED BY: A. MULL
IN CHARGE: T. KIM
DATE: 7/13/2021

REGISTERED PROFESSIONAL ENGINEER — No. — Exp. — CIVIL — STATE OF CALIFORNIA

Metro
LOS ANGELES COUNTY
METROPOLITAN TRANSPORTATION AUTHORITY

HDR ENGINEERING
350 S. GRAND AVENUE
SUITE 2900
LOS ANGELES, CA 90071
(213) 239-5800

SUBMITTED: _____ PROJECT MANAGER
APPROVED: _____

LINK UNION STATION PROJECT
TRACK DRAWINGS
TRACK PLAN AND PROFILE
CP MISSION CONTINUED
RR1 STA 81+94.65 TO RR1 STA 89+00

CONTRACT NO
DRAWING NO: TR-102
REV
SCALE: HORIZ: 1"=40' VERT: 1"=10'
SHEET NO: 7 of 72

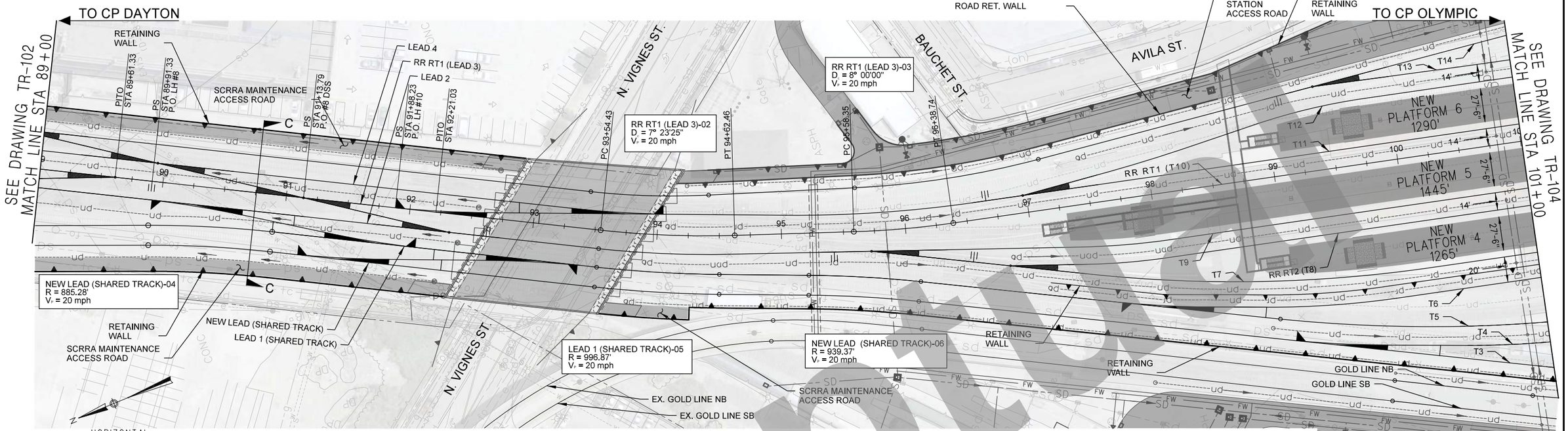

HORIZONTAL
40 0 40 80
1"=40'

VERTICAL
10 0 10 20
1"=10'

NOTES:

1. PAVED TRACK CROSSING LOCATIONS TBD
2. SEE STRUCTURES PLANS FOR CLEARANCES AND DETAILS ON PROPOSED VIGNES STREET AND CESAR CHAVEZ AVENUE RAIL STRUCTURES
3. SEE ARCHITECTURE AND ON-SITE CIVIL FOR ONSITE STATION WORK
4. STATIONING AND PROFILE GRADES ARE BASED ON LEAD TRACK 3/RR RT1 (T10). ELEVATION OF ALL OTHER TRACKS DEPICTED IN PLAN IS EQUAL TO PERPENDICULAR HORIZONTAL PROJECTION OF LEAD TRACK 3/RR RT1 UNLESS NOTED OTHERWISE

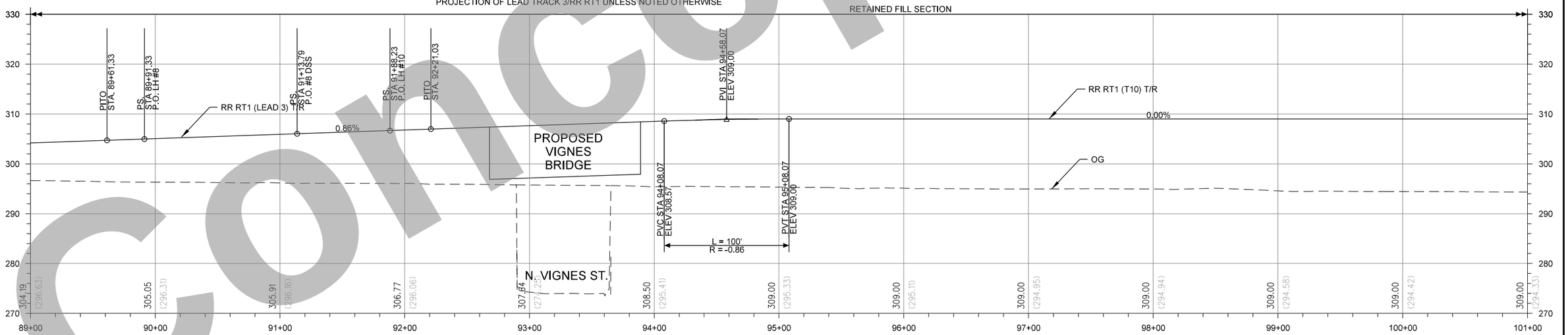

AML ACNRS C CEL S CRR
LMR MP AML RPSARCML

Concept

REV	DATE	BY	APP	REG NO	EXPIRES	SEAL HOLDER	DESCRIPTION

THE PREPARATION OF THIS DRAWING HAS BEEN FINANCED IN PART THROUGH A GRANT FROM THE U.S. DEPARTMENT OF TRANSPORTATION, FEDERAL TRANSIT ADMINISTRATION (FTA), UNDER THE FEDERAL TRANSIT ACT OF 1964, AS AMENDED, AND IN PART BY THE TAXES OF THE CITIZENS OF LOS ANGELES COUNTY AND OF THE STATE OF CALIFORNIA.

DESIGNED BY Z. MACDONELL
DRAWN BY M. SHAHIN
CHECKED BY A. MULL
IN CHARGE T. KIM
DATE 7/13/2021

REGISTERED PROFESSIONAL ENGINEER — No. Exp. — CIVIL — STATE OF CALIFORNIA

Metro
LOS ANGELES COUNTY
METROPOLITAN TRANSPORTATION AUTHORITY

HDR ENGINEERING
350 S. GRAND AVENUE
SUITE 2900
LOS ANGELES, CA 90071
(213) 239-5800

SUBMITTED: _____ PROJECT MANAGER
APPROVED: _____

LINK UNION STATION PROJECT
TRACK DRAWINGS
TRACK PLAN AND PROFILE
RR1 STA 89+00 TO RR1 STA 101+00

CONTRACT NO
DRAWING NO TR-103
REV
SCALE HORIZ: 1"=40' VERT: 1"=10'
SHEET NO 8 of 72

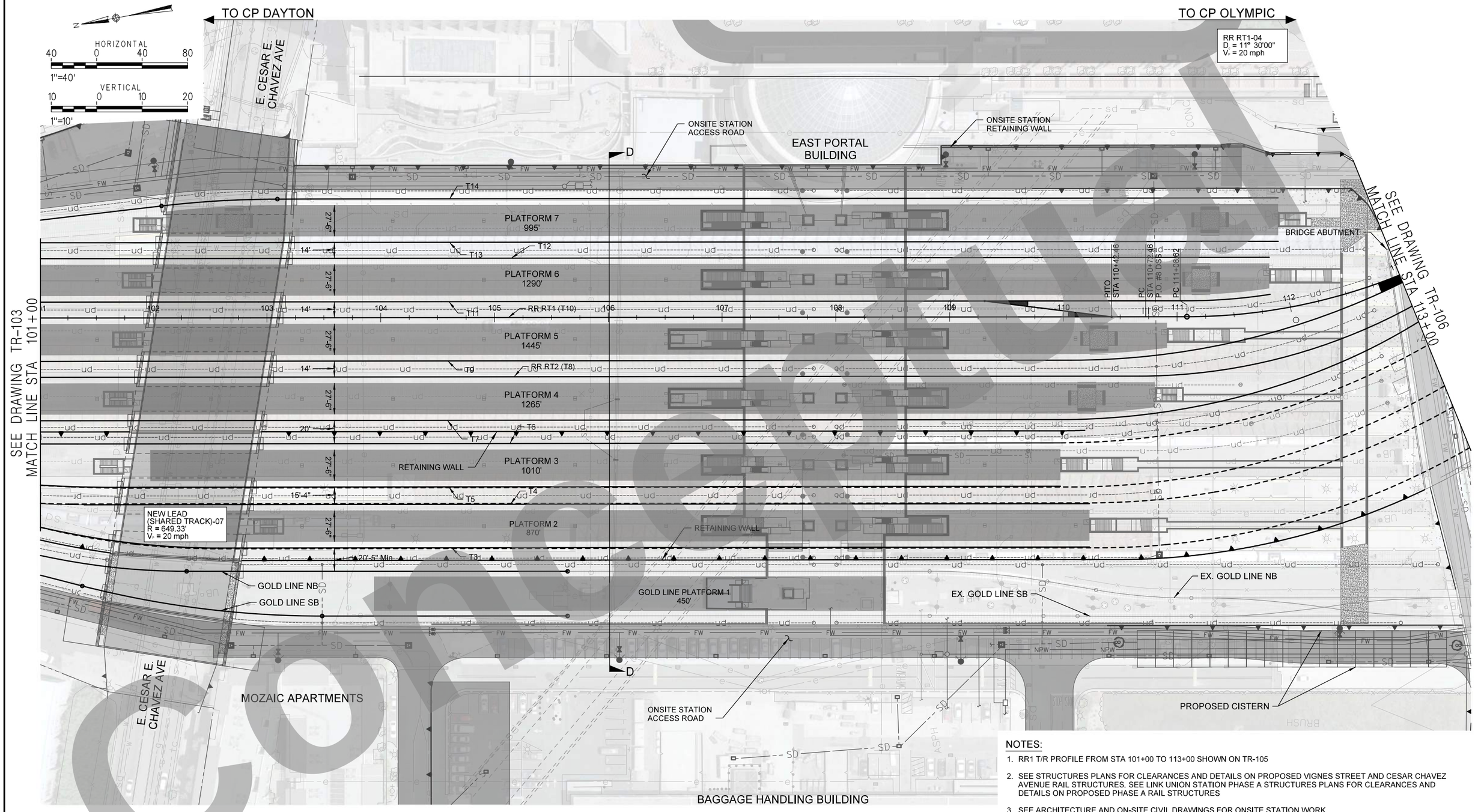

NOTES:

1. RR1 T/R PROFILE FROM STA 101+00 TO 113+00 SHOWN ON TR-105
2. SEE STRUCTURES PLANS FOR CLEARANCES AND DETAILS ON PROPOSED VIGNES STREET AND CESAR CHAVEZ AVENUE RAIL STRUCTURES. SEE LINK UNION STATION PHASE A STRUCTURES PLANS FOR CLEARANCES AND DETAILS ON PROPOSED PHASE A RAIL STRUCTURES
3. SEE ARCHITECTURE AND ON-SITE CIVIL DRAWINGS FOR ONSITE STATION WORK

AML ACNRS C GEL S GRR
LMR MP AML RPSARGML

THE PREPARATION OF THIS DRAWING HAS BEEN FINANCED IN PART THROUGH A GRANT FROM THE U.S. DEPARTMENT OF TRANSPORTATION, FEDERAL TRANSIT ADMINISTRATION (FTA), UNDER THE FEDERAL TRANSIT ACT OF 1964, AS AMENDED, AND IN PART BY THE TAXES OF THE CITIZENS OF LOS ANGELES COUNTY AND OF THE STATE OF CALIFORNIA.

REV	DATE	BY	APP	REG NO	EXPIRES	SEAL HOLDER	DESCRIPTION

DESIGNED BY: Z. MACDONELL
DRAWN BY: M. SHAHIN
CHECKED BY: A. MULL
IN CHARGE: T. KIM
DATE: 7/13/2021

REGISTERED PROFESSIONAL ENGINEER — No. Exp. CIVIL — STATE OF CALIFORNIA

Metro

LOS ANGELES COUNTY
METROPOLITAN TRANSPORTATION AUTHORITY

HDR ENGINEERING
350 S. GRAND AVENUE
SUITE 2900
LOS ANGELES, CA 90071
(213) 239-5800

SUBMITTED: _____ PROJECT MANAGER

APPROVED: _____

LINK UNION STATION PROJECT

TRACK DRAWINGS
TRACK PLAN
RR1 STA 101+00 TO RR1 STA 113+00

CONTRACT NO

DRAWING NO: TR-104 | REV

SCALE: HORIZ: 1"=40'
VERT: 1"=10'

SHEET NO: 9 of 72

Concept

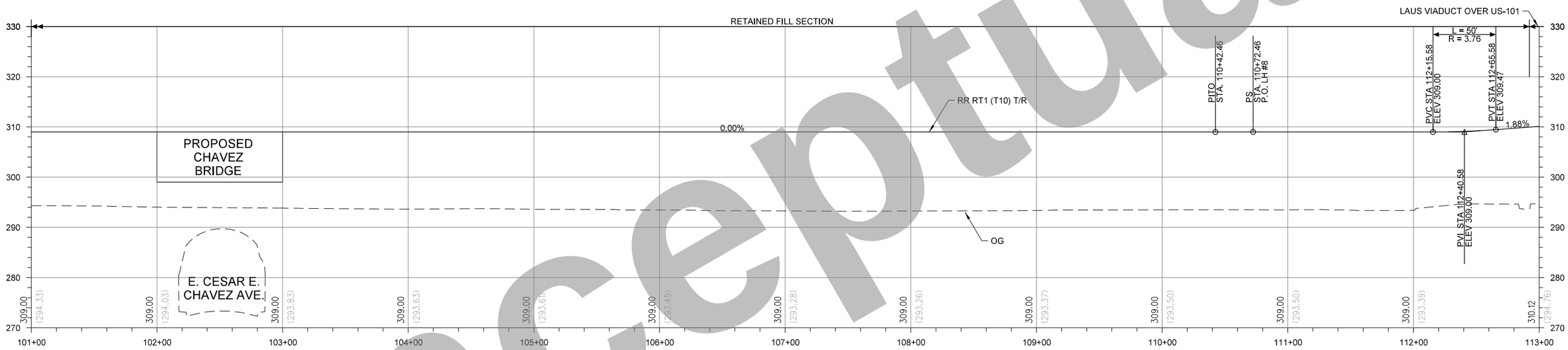

NOTES:

1. SEE STRUCTURES PLANS FOR CLEARANCES AND DETAILS ON PROPOSED VIGNES STREET AND CESAR CHAVEZ AVENUE RAIL STRUCTURES. SEE LINK UNION STATION PHASE A STRUCTURES PLANS FOR CLEARANCES AND DETAILS ON PROPOSED PHASE A RAIL STRUCTURES
2. STATIONING AND PROFILE GRADES ARE BASED ON T10/RR RT1. ELEVATION OF ALL OTHER TRACKS DEPICTED IN PLAN IS EQUAL TO PERPENDICULAR HORIZONTAL PROJECTION OF T10/RR RT1 UNLESS NOTED OTHERWISE

Conceptual

AML ACNRS C CEL S CRR
LMR MP AML RPSARCML

THE PREPARATION OF THIS DRAWING HAS BEEN FINANCED IN PART THROUGH A GRANT FROM THE U.S. DEPARTMENT OF TRANSPORTATION, FEDERAL TRANSIT ADMINISTRATION (FTA), UNDER THE FEDERAL TRANSIT ACT OF 1964, AS AMENDED, AND IN PART BY THE TAXES OF THE CITIZENS OF LOS ANGELES COUNTY AND OF THE STATE OF CALIFORNIA.

REV	DATE	BY	APP	REG NO	EXPIRES	SEAL HOLDER	DESCRIPTION

DESIGNED BY Z. MACDONELL
DRAWN BY M. SHAHIN
CHECKED BY A. MULL
IN CHARGE T. KIM
DATE 7/13/2021

REGISTERED PROFESSIONAL ENGINEER — No. Exp. CIVIL — STATE OF CALIFORNIA

Metro
LOS ANGELES COUNTY
METROPOLITAN TRANSPORTATION AUTHORITY

HDR

HDR ENGINEERING
350 S. GRAND AVENUE
SUITE 2900
LOS ANGELES, CA 90071
(213) 239-5800

SUBMITTED: _____ PROJECT MANAGER
APPROVED: _____

LINK UNION STATION PROJECT

TRACK DRAWINGS
TRACK PROFILE
RR1 STA 101+00 TO RR1 STA 113+00

CONTRACT NO
DRAWING NO TR-105 REV
SCALE HORIZ: 1"=40' VERT: 1"=10'
SHEET NO 10 of 72

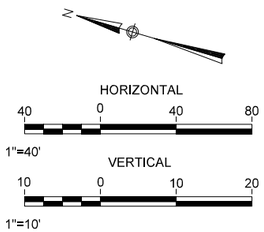

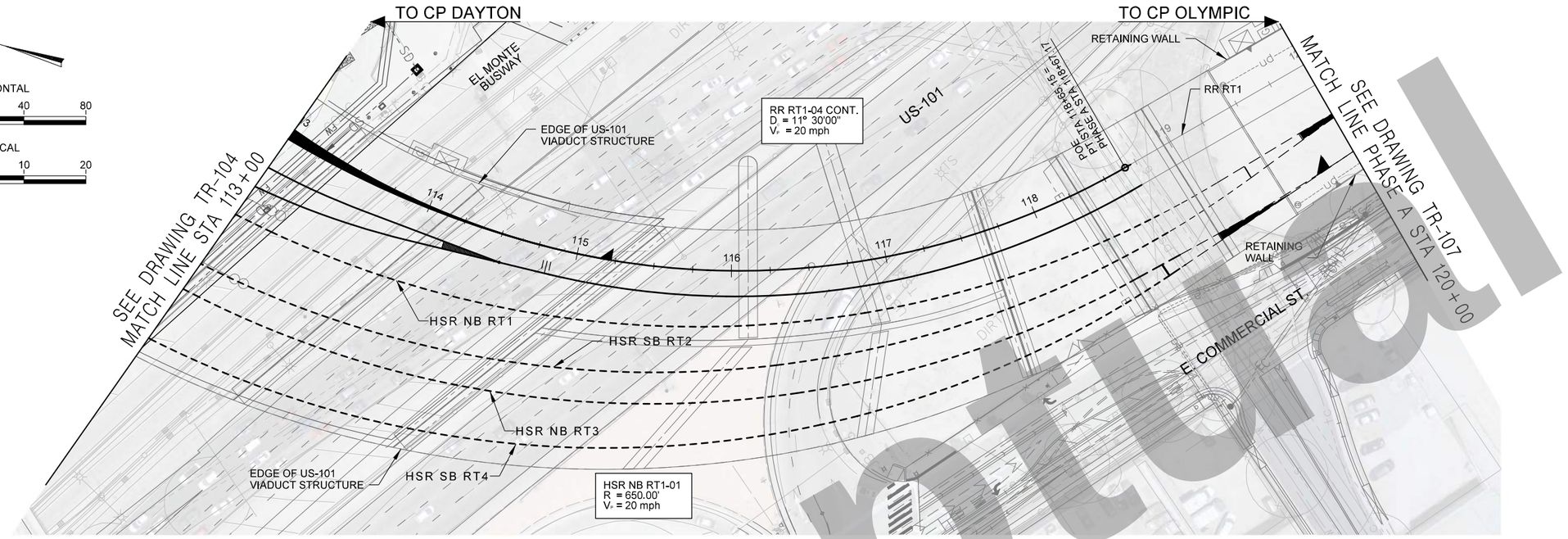

NOTES:

1. SEE STRUCTURES PLANS FOR CLEARANCES AND DETAILS ON PROPOSED RAIL STRUCTURES
2. EXISTING CONDITION REFLECTS CONSTRUCTION OF PHASE A OF THE LINK UNION STATION PROJECT. SEE LINK UNION STATION PHASE A DRAWINGS FOR ALL REGIONAL RAIL AND AMTRAK TRACK AND TRACK SIGNALS, UTILITIES, DRAINAGE, STRUCTURES (INCLUDING CLEARANCES AND DETAILS), ROADWAYS, AND CALTRANS/US-101 RELATED WORK SOUTH OF LAUS
3. STATIONING AND PROFILE GRADES ARE BASED ON RR RT1. ELEVATION OF ALL OTHER TRACKS DEPICTED IN PLAN IS EQUAL TO PERPENDICULAR HORIZONTAL PROJECTION OF RR RT1 UNLESS NOTED OTHERWISE

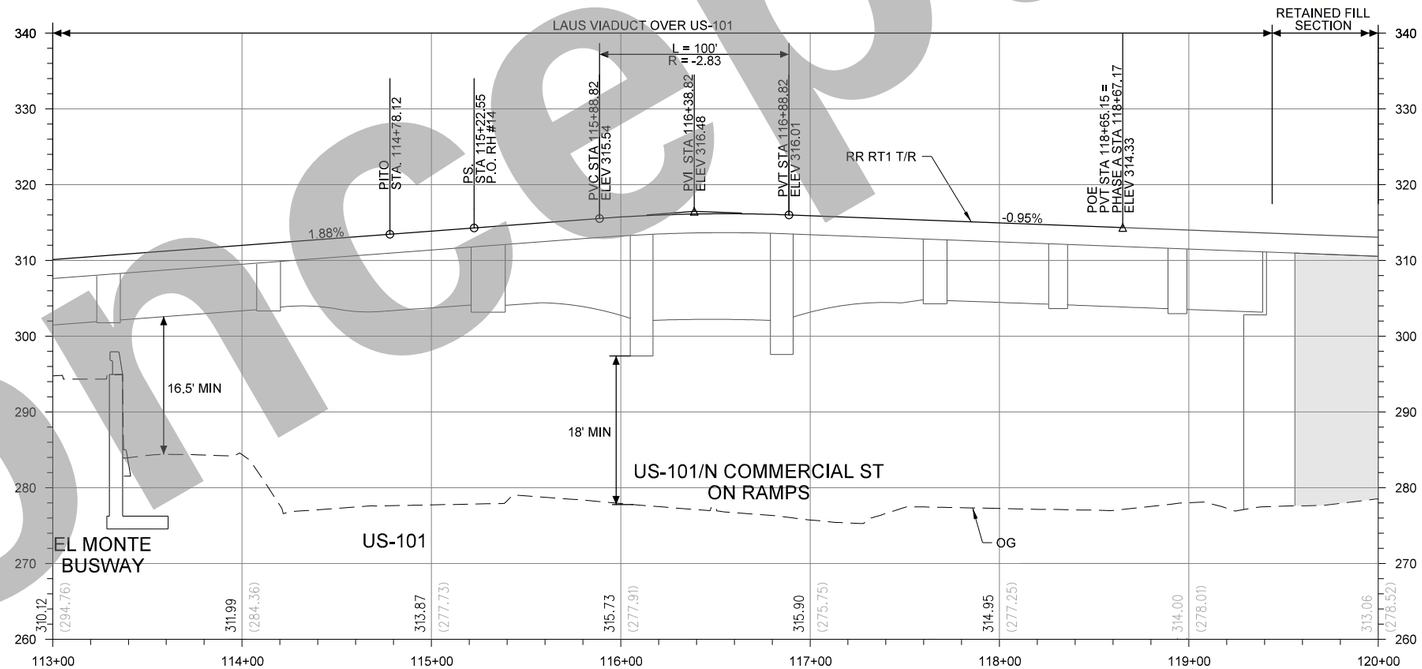

AML ACNRS C EL S GRR
LMR MP AML RPSARGML

Concept

THE PREPARATION OF THIS DRAWING HAS BEEN FINANCED IN PART THROUGH A GRANT FROM THE U.S. DEPARTMENT OF TRANSPORTATION, FEDERAL TRANSIT ADMINISTRATION (FTA), UNDER THE FEDERAL TRANSIT ACT OF 1964, AS AMENDED, AND IN PART BY THE TAXES OF THE CITIZENS OF LOS ANGELES COUNTY AND OF THE STATE OF CALIFORNIA.

REV	DATE	BY	APP	REG NO	EXPIRES	SEAL HOLDER	DESCRIPTION

DESIGNED BY Z. MACDONELL
DRAWN BY M. SHAHIN
CHECKED BY A. MULL
IN CHARGE T. KIM
DATE 7/13/2021

REGISTERED PROFESSIONAL ENGINEER — No. — Exp. — CIVIL — STATE OF CALIFORNIA

Metro
LOS ANGELES COUNTY
METROPOLITAN TRANSPORTATION AUTHORITY

HDR ENGINEERING
350 S. GRAND AVENUE
SUITE 2900
LOS ANGELES, CA 90071
(213) 239-5800

SUBMITTED: _____ PROJECT MANAGER
APPROVED: _____

LINK UNION STATION PROJECT
TRACK DRAWINGS
TRACK PLAN AND PROFILE
RR1 STA 113+00 TO RR1 STA 120+00

CONTRACT NO
DRAWING NO TR-106 REV
SCALE HORIZ: 1"=40' VERT: 1"=10'
SHEET NO 11 of 72

HORIZONTAL
40 0 40 80
1"=40'
VERTICAL
10 0 10 20
1"=10'

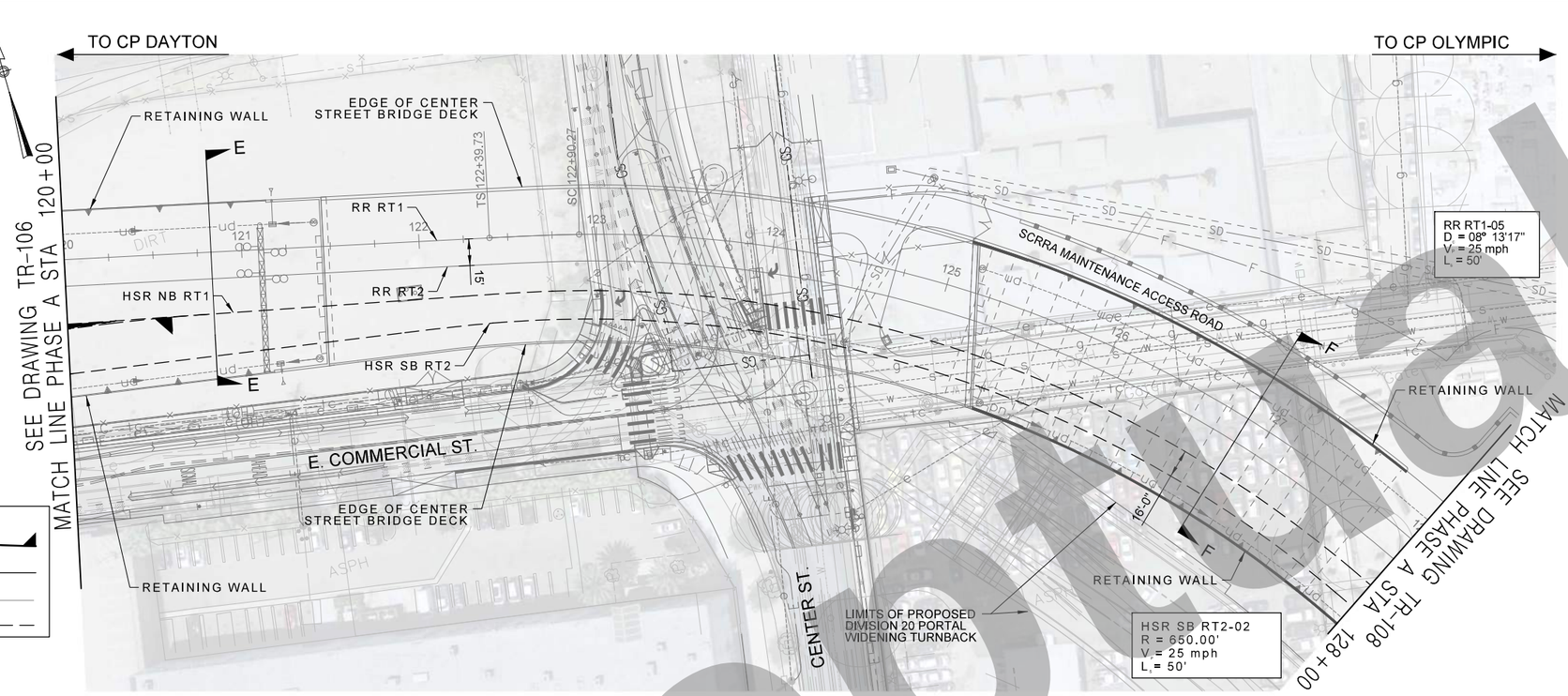

LEGEND:
- POWER TURNOUT
- PROPOSED TRACK ℄
- EXISTING TRACK ℄
- FUTURE TRACK ℄

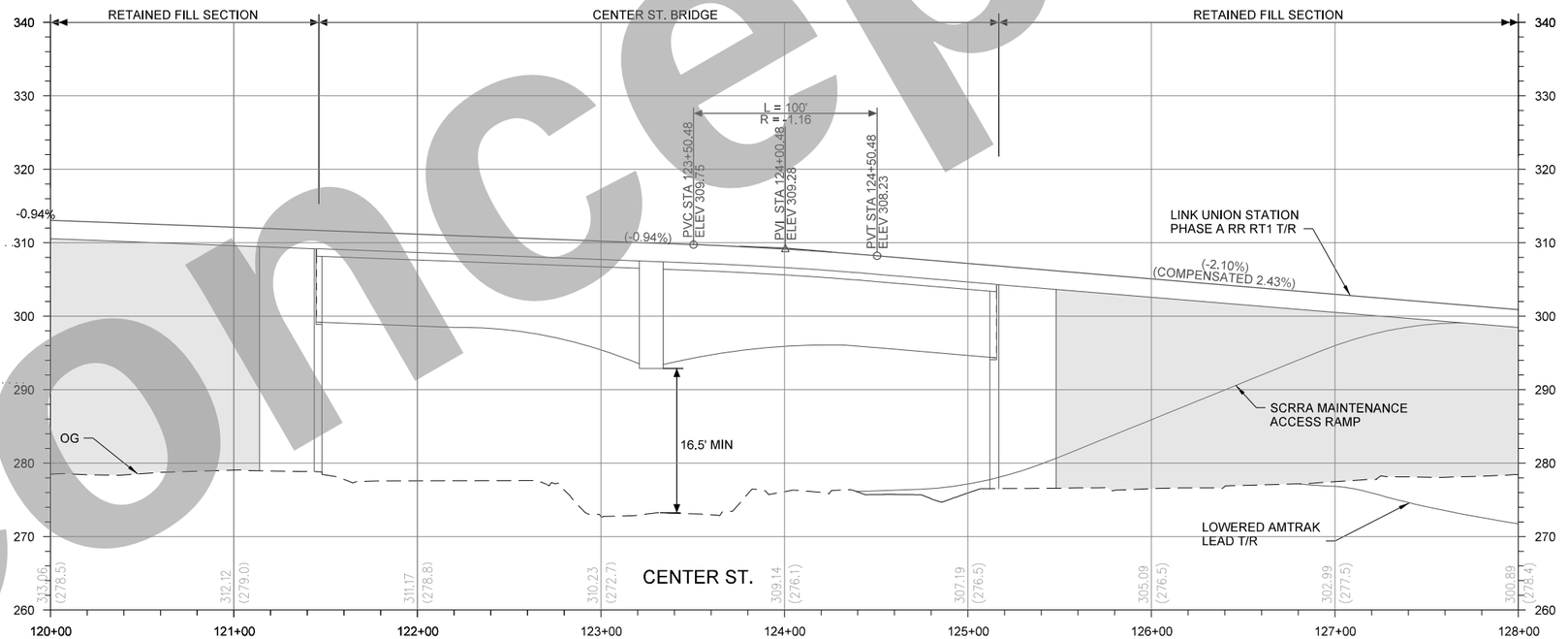

NOTES:

1. EXISTING CONDITION REFLECTS CONSTRUCTION OF PHASE A OF THE LINK UNION STATION PROJECT. SEE LINK UNION STATION PHASE A DRAWINGS FOR ALL REGIONAL RAIL AND AMTRAK TRACK AND TRACK SIGNALS, UTILITIES, DRAINAGE, STRUCTURES (INCLUDING CLEARANCES AND DETAILS), ROADWAYS, AND CALTRANS/US-101 RELATED WORK SOUTH OF LAUS
2. STATIONING, PROFILE GRADES, AND STRUCTURAL SYSTEM LIMITS AND CLEARANCES ARE FROM LINK UNION STATION PHASE A RR RT1 TRACK DRAWINGS. ELEVATION OF HSR TRACKS DEPICTED IN PLAN IS EQUAL TO PERPENDICULAR HORIZONTAL PROJECTION OF LINK UNION STATION PHASE A RR RT1 ALIGNMENT UNLESS NOTED OTHERWISE

AMLACNRS C EL S GRR
LMR MP AML RPSARGML

Conceptual

THE PREPARATION OF THIS DRAWING HAS BEEN FINANCED IN PART THROUGH A GRANT FROM THE U.S. DEPARTMENT OF TRANSPORTATION, FEDERAL TRANSIT ADMINISTRATION (FTA), UNDER THE FEDERAL TRANSIT ACT OF 1964, AS AMENDED, AND IN PART BY THE TAXES OF THE CITIZENS OF LOS ANGELES COUNTY AND OF THE STATE OF CALIFORNIA.

REV	DATE	BY	APP	REG NO	EXPIRES	SEAL HOLDER	DESCRIPTION

DESIGNED BY Z. MACDONELL
DRAWN BY M. SHAHIN
CHECKED BY A. MULL
IN CHARGE T. KIM
DATE 7/13/2021

REGISTERED PROFESSIONAL ENGINEER No. Exp. CIVIL STATE OF CALIFORNIA

Metro
LOS ANGELES COUNTY
METROPOLITAN TRANSPORTATION AUTHORITY

HDR ENGINEERING
350 S. GRAND AVENUE
SUITE 2900
LOS ANGELES, CA 90071
(213) 239-5800

SUBMITTED: _____ PROJECT MANAGER
APPROVED: _____

LINK UNION STATION PROJECT
TRACK DRAWINGS
TRACK PLAN AND PROFILE
RR1 STA 120+00 TO RR1 STA 128+00

CONTRACT NO
DRAWING NO TR-107 REV
SCALE HORIZ: 1"=40' VERT: 1"=10'
SHEET NO 12 of 72

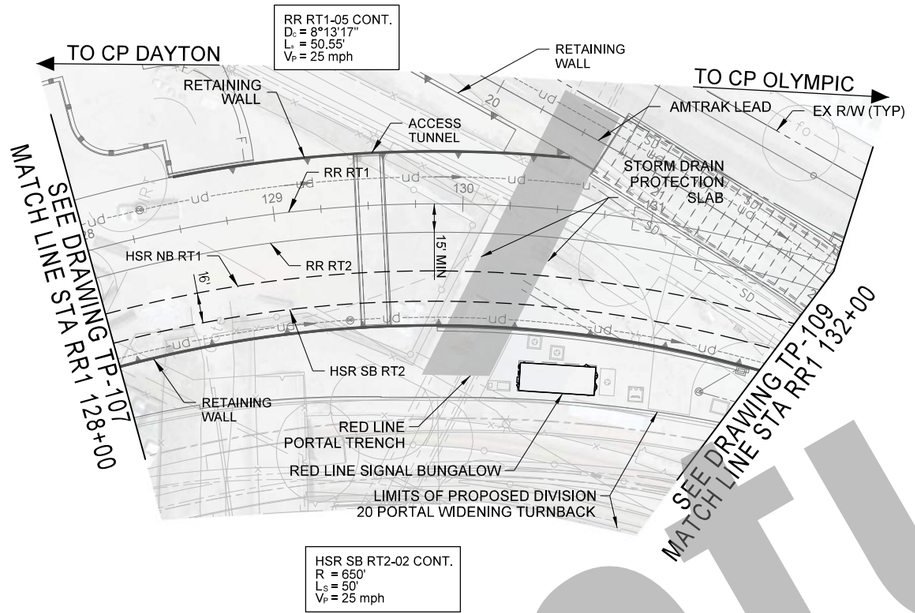

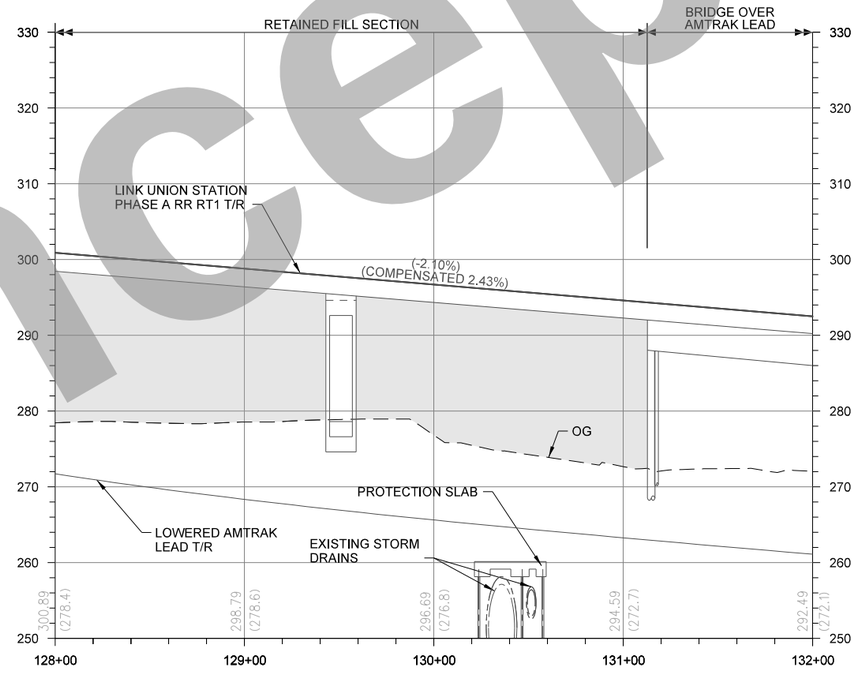

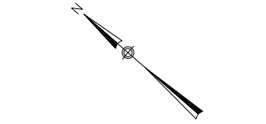

HORIZONTAL
40 0 40 80
1"=40'

VERTICAL
10 0 10 20
1"=10'

NOTES:

1. EXISTING CONDITION REFLECTS CONSTRUCTION OF PHASE A OF THE LINK UNION STATION PROJECT. SEE LINK UNION STATION PHASE A DRAWINGS FOR ALL REGIONAL RAIL AND AMTRAK TRACK AND TRACK SIGNALS, UTILITIES, DRAINAGE, STRUCTURES (INCLUDING CLEARANCES AND DETAILS), ROADWAYS, AND CALTRANS/US-101 RELATED WORK SOUTH OF LAUS
2. STATIONING, PROFILE GRADES, AND STRUCTURAL SYSTEM LIMITS AND CLEARANCES ARE FROM LINK UNION STATION PHASE A RR RT1 TRACK DRAWINGS. ELEVATION OF HSR TRACKS DEPICTED IN PLAN IS EQUAL TO PERPENDICULAR HORIZONTAL PROJECTION OF LINK UNION STATION PHASE A RR RT1 ALIGNMENT UNLESS NOTED OTHERWISE

AML ACNRS C EL S GRR
LMR MP AML RPSARML

Conceptual

THE PREPARATION OF THIS DRAWING HAS BEEN FINANCED IN PART THROUGH A GRANT FROM THE U.S. DEPARTMENT OF TRANSPORTATION, FEDERAL TRANSIT ADMINISTRATION (FTA), UNDER THE FEDERAL TRANSIT ACT OF 1964, AS AMENDED, AND IN PART BY THE TAXES OF THE CITIZENS OF LOS ANGELES COUNTY AND OF THE STATE OF CALIFORNIA.

REV	DATE	BY	APP	REG NO	EXPIRES	SEAL HOLDER	DESCRIPTION

DESIGNED BY Z. MACDONELL
DRAWN BY M. SHAHIN
CHECKED BY A. MULL
IN CHARGE T. KIM
DATE 7/13/2021

REGISTERED PROFESSIONAL ENGINEER — No. — Exp. — CIVIL — STATE OF CALIFORNIA

Metro

LOS ANGELES COUNTY
METROPOLITAN TRANSPORTATION AUTHORITY

HDR ENGINEERING
350 S. GRAND AVENUE
SUITE 2900
LOS ANGELES, CA 90071
(213) 239-5800

SUBMITTED: _____ PROJECT MANAGER

APPROVED: _____

LINK UNION STATION PROJECT

TRACK DRAWINGS
TRACK PLAN AND PROFILE
RR1 STA 128+00 TO RR1 STA 132+00

CONTRACT NO

DRAWING NO TP-108 REV

SCALE HORIZ: 1"=40'
VERT: 1"=10'

SHEET NO 13 of 72

RR RT1-05 CONT.
D_c = 8°13'17"
L_s = 50.55'
V_P = 25 mph

LOS ANGELES RIVER

SCRRA MT-3

RETAINING WALL

RR RT1

RR RT2

HSR NB RT1

HSR SB RT2

RETAINING WALL

SEE DRAWING TP-108
MATCH LINE STA RR1 132+00

CS 133+32.09

ST 133+82.63

PC 22+17.68

18.67'

RETAINING WALL

AMTRAK LEAD

15'

METRO DIVISION 20 PROJECT LIMIT

DIVISION 20 YARD

PC 26+82.45

AMTRAK-03
D_c = 4°45'00"
V_P = 20 mph
V_F = 15 mph

PT 28+17.61

15'

16'

11'

HSR SB RT2-02 CONT.
R = 650'
L_s = 50'
V_P = 25 mph

END NEW TRACK
BEGIN SHIFT TRACK

G

G

R/W BETWEEN BNSF YARD AND DIVISION 20

RETAINING WALL

TOP OF SLOPE

EDGE OF GUTTER

EX R/W (TYP)

TS 140+79.59

SC 141+59.59

RR RT1-06
D_c = 4°30'00"
L_s = 80.00'
V_P = 30 mph
V_F = 20 mph

HSR NB RT1-03
R = 1200'
V_P = 25 mph

AMTRAK-04
D_c = 7°40'31"
V_P = 20 mph
V_F = 15 mph

CANTILEVER SIGNAL

END SHIFT TRACK
BEGIN RH #14 POTO

E FIRST STREET

H

H

SEE DRAWING TP-110
MATCH LINE STA RR1 144+00

HSR SB RT2-03
R_1 = 1100'
R_2 = 1500'
V_P = 25 mph

PT 34+06.19

N

HORIZONTAL
40 0 40 80
1"=40'

VERTICAL
10 0 10 20
1"=10'

NOTES:

1. EXISTING CONDITION REFLECTS CONSTRUCTION OF PHASE A OF THE LINK UNION STATION PROJECT. SEE LINK UNION STATION PHASE A DRAWINGS FOR ALL REGIONAL RAIL AND AMTRAK TRACK AND TRACK SIGNALS, UTILITIES, DRAINAGE, STRUCTURES (INCLUDING CLEARANCES AND DETAILS), ROADWAYS,AND CALTRANS/US-101 RELATED WORK SOUTH OF LAUS
2. STATIONING, PROFILE GRADES, AND STRUCTURAL SYSTEM LIMITS AND CLEARANCES ARE FROM LINK UNION STATION PHASE A RR RT1 TRACK DRAWINGS. ELEVATION OF HSR TRACKS DEPICTED IN PLAN IS EQUALTO PERPENDICULAR HORIZONTAL PROJECTION OF LINK UNION STATION PHASE A RR RT1 ALIGNMENT UNLESS NOTED OTHERWISE

BRIDGE OVER AMTRAK LEAD

RETAINED FILL SECTION

PVI STA 134+34.12
ELEV 287.57

PVC STA 133+84.12
ELEV 288.62

PVT STA 134+84.12
ELEV 286.35

L = 100'
R = -0.35

(-2.10%)

(-2.45%)

LINK UNION STATION PHASE A RR RT1 T/R

OG

LOWERED AMTRAK LEAD T/R

E FIRST STREET BRIDGE

L = 100'
R = 2.33

PVC STA 142+54.45
ELEV 267.48

22.8' MIN

PVT STA 143+54.45
ELEV 266.19

(-0.12%)

PVI STA 143+04.45
ELEV 266.25

310	300	290	280	270	260	250	240

292.49 (272.1) | 290.39 (271.0) | 288.29 (270.6) | 285.96 (270.1) | 283.51 (269.4) | 281.06 (269.1) | 278.61 (268.5) | 276.16 (268.2) | 273.71 (267.6) | 271.26 (266.9) | 268.81 (266.4) | 266.60 (266.2) | 266.14 (265.8)

132+00 | 133+00 | 134+00 | 135+00 | 136+00 | 137+00 | 138+00 | 139+00 | 140+00 | 141+00 | +00

AMLACNRS C GEL S GBR
LMR MP AML RPSARGML

Conceptual

THE PREPARATION OF THIS DRAWING HAS BEEN FINANCED IN PART THROUGH A GRANT FROM THE U.S. DEPARTMENT OF TRANSPORTATION, FEDERAL TRANSIT ADMINISTRATION (FTA), UNDER THE FEDERAL TRANSIT ACT OF 1964, AS AMENDED, AND IN PART BY THE TAXES OF THE CITIZENS OF LOS ANGELES COUNTY AND OF THE STATE OF CALIFORNIA.

REV	DATE	BY	APP	REG NO	EXPIRES	SEAL HOLDER	DESCRIPTION

DESIGNED BY: Z. MACDONELL
DRAWN BY: M. SHAHIN
CHECKED BY: A. MULL
IN CHARGE: T. KIM
DATE: 7/13/2021

REGISTERED PROFESSIONAL ENGINEER — No. — EXP. — CIVIL — STATE OF CALIFORNIA

Metro
LOS ANGELES COUNTY
METROPOLITAN TRANSPORTATION AUTHORITY

HDR
HDR ENGINEERING
350 S. GRAND AVENUE
SUITE 2900
LOS ANGELES, CA 90071
(213) 239-5800

SUBMITTED: _____ PROJECT MANAGER

APPROVED: _____

LINK UNION STATION PROJECT

TRACK DRAWINGS
TRACK PLAN AND PROFILE
RR1 STA 132+00 TO RR1 STA 144+00

CONTRACT NO

DRAWING NO: TP-109
REV

SCALE: HORIZ: 1"=40'
VERT: 1"=10'

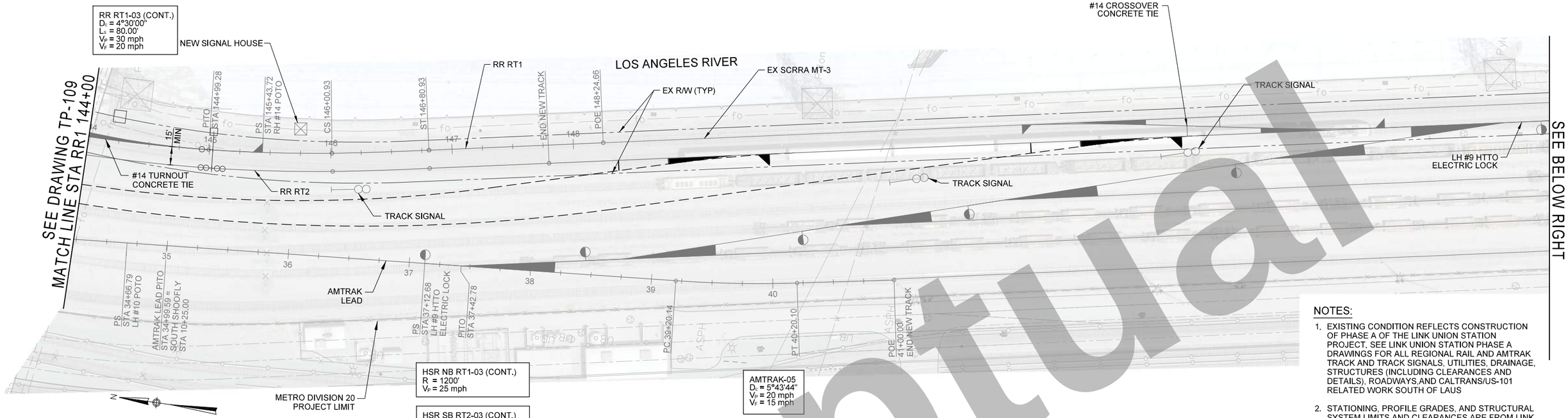

NOTES:

1. EXISTING CONDITION REFLECTS CONSTRUCTION OF PHASE A OF THE LINK UNION STATION PROJECT. SEE LINK UNION STATION PHASE A DRAWINGS FOR ALL REGIONAL RAIL AND AMTRAK TRACK AND TRACK SIGNALS, UTILITIES, DRAINAGE, STRUCTURES (INCLUDING CLEARANCES AND DETAILS), ROADWAYS,AND CALTRANS/US-101 RELATED WORK SOUTH OF LAUS
2. STATIONING, PROFILE GRADES, AND STRUCTURAL SYSTEM LIMITS AND CLEARANCES ARE FROM LINK UNION STATION PHASE A RR RT1 TRACK DRAWINGS. ELEVATION OF HSR TRACKS DEPICTED IN PLAN IS EQUALTO PERPENDICULAR HORIZONTAL PROJECTION OF LINK UNION STATION PHASE A RR RT1 ALIGNMENT UNLESS NOTED OTHERWISE

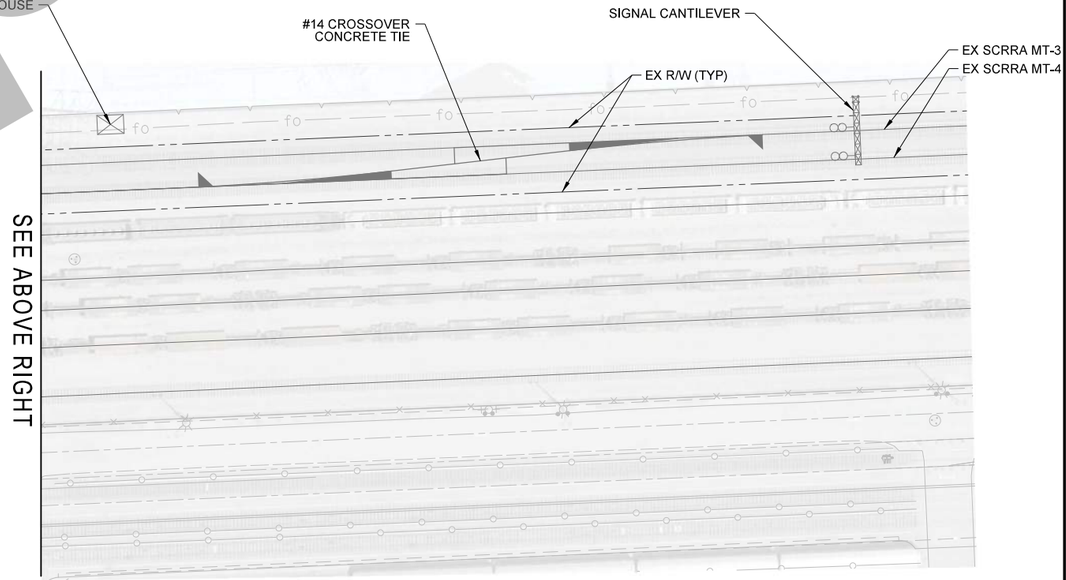

AML ACNRS C EL S GRR
LMR MP AML RPSARGML

Conceptual

THE PREPARATION OF THIS DRAWING HAS BEEN FINANCED IN PART THROUGH A GRANT FROM THE U.S. DEPARTMENT OF TRANSPORTATION, FEDERAL TRANSIT ADMINISTRATION (FTA), UNDER THE FEDERAL TRANSIT ACT OF 1964, AS AMENDED, AND IN PART BY THE TAXES OF THE CITIZENS OF LOS ANGELES COUNTY AND OF THE STATE OF CALIFORNIA.

REV	DATE	BY	APP	REG NO	EXPIRES	SEAL HOLDER	DESCRIPTION

DESIGNED BY Z. MACDONELL
DRAWN BY M. SHAHIN
CHECKED BY A. MULL
IN CHARGE T. KIM
DATE 7/13/2021

REGISTERED PROFESSIONAL ENGINEER No. Exp. CIVIL STATE OF CALIFORNIA

Metro
LOS ANGELES COUNTY
METROPOLITAN TRANSPORTATION AUTHORITY

HDR
HDR ENGINEERING
350 S. GRAND AVENUE
SUITE 2900
LOS ANGELES, CA 90071
(213) 239-5800

SUBMITTED: _____ PROJECT MANAGER
APPROVED: _____

LINK UNION STATION PROJECT
TRACK DRAWINGS
TRACK PLAN AND PROFILE
RR1 STA 144+00 TO RR1 148+24.66

CONTRACT NO
DRAWING NO TP-110
REV
SCALE HORIZ: 1"=40' VERT: 1"=10'
SHEET NO 15 of 72

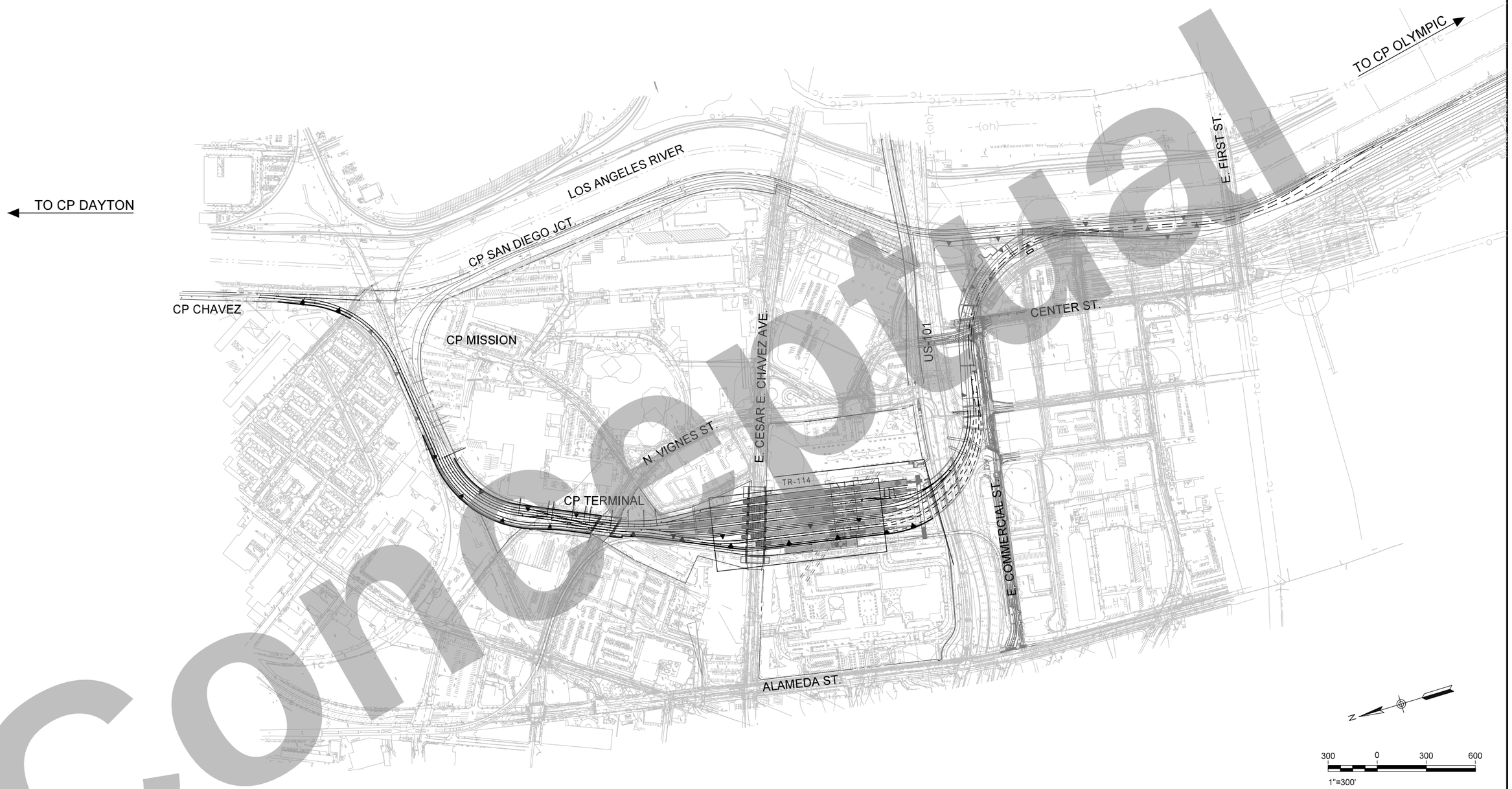

Conceptual

AML ACNRS C EL S GRR
LMR MP AML RPSARGML

THE PREPARATION OF THIS DRAWING HAS BEEN FINANCED IN PART THROUGH A GRANT FROM THE U.S. DEPARTMENT OF TRANSPORTATION, FEDERAL TRANSIT ADMINISTRATION (FTA), UNDER THE FEDERAL TRANSIT ACT OF 1964, AS AMENDED, AND IN PART BY THE TAXES OF THE CITIZENS OF LOS ANGELES COUNTY AND OF THE STATE OF CALIFORNIA.

REV	DATE	BY	APP	REG NO	EXPIRES	SEAL HOLDER	DESCRIPTION

DESIGNED BY Z. MACDONELL
DRAWN BY M. SHAHIN
CHECKED BY A. MULL
IN CHARGE T. KIM
DATE 7/13/2021

REGISTERED PROFESSIONAL ENGINEER — No. Exp. CIVIL — STATE OF CALIFORNIA

Metro

LOS ANGELES COUNTY
METROPOLITAN TRANSPORTATION AUTHORITY

HDR

HDR ENGINEERING
350 S. GRAND AVENUE
SUITE 2900
LOS ANGELES, CA 90071
(213) 239-5800

SUBMITTED: _____ PROJECT MANAGER

APPROVED: _____

LINK UNION STATION PROJECT

TRACK DRAWINGS
GOLD LINE KEY MAP

CONTRACT NO
DRAWING NO TR-111
REV
SCALE HORIZ: 1"=300'
SHEET NO 16 of 72

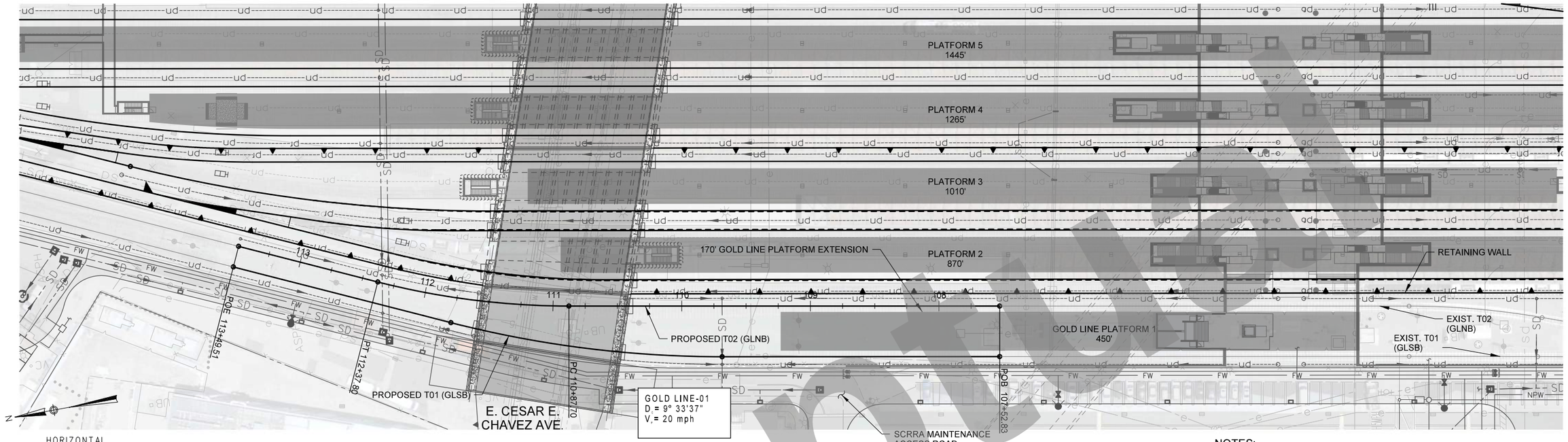

HORIZONTAL
40 0 40 80
1"=40'

VERTICAL
10 0 10 20
1"=10'

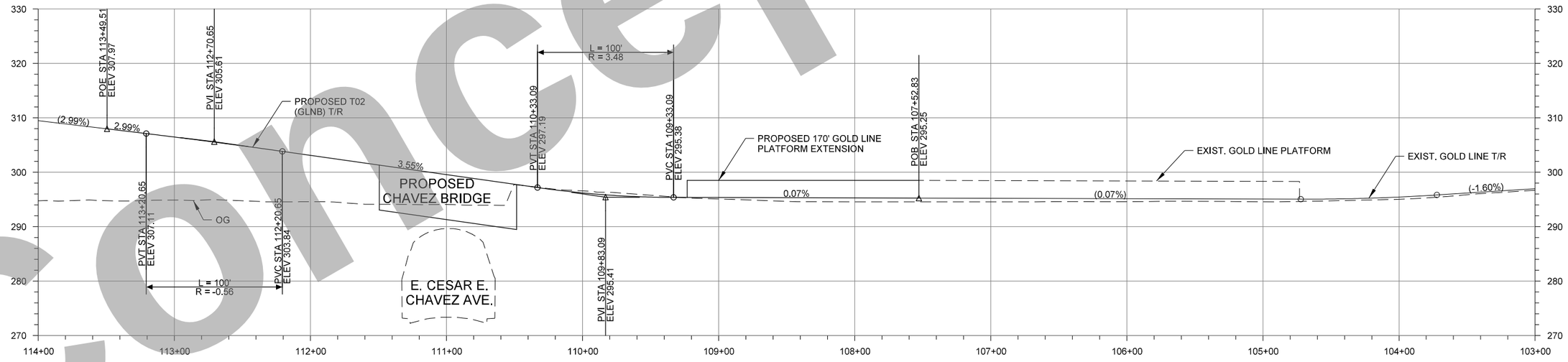

NOTES:

1. SEE STRUCTURES PLANS FOR CLEARANCE AND DETAILS ON PROPOSED RAIL STRUCTURE
2. SEE ARCHITECTURE AND ON-SITE CIVIL DRAWINGS FOR STATION WORK

AML ACNRS C EL S GRR
LMR MP AML RPSARSML

Concept

THE PREPARATION OF THIS DRAWING HAS BEEN FINANCED IN PART THROUGH A GRANT FROM THE U.S. DEPARTMENT OF TRANSPORTATION, FEDERAL TRANSIT ADMINISTRATION (FTA), UNDER THE FEDERAL TRANSIT ACT OF 1964, AS AMENDED, AND IN PART BY THE TAXES OF THE CITIZENS OF LOS ANGELES COUNTY AND OF THE STATE OF CALIFORNIA.

REV	DATE	BY	APP	REG NO	EXPIRES	SEAL HOLDER	DESCRIPTION

DESIGNED BY Z. MACDONELL
DRAWN BY M. SHAHIN
CHECKED BY A. MULL
IN CHARGE T. KIM
DATE 7/13/2021

REGISTERED PROFESSIONAL ENGINEER — No. Exp. CIVIL — STATE OF CALIFORNIA

Metro

LOS ANGELES COUNTY
METROPOLITAN TRANSPORTATION AUTHORITY

HDR ENGINEERING
350 S. GRAND AVENUE
SUITE 2900
LOS ANGELES, CA 90071
(213) 239-5800

SUBMITTED: _____ PROJECT MANAGER

APPROVED: _____

LINK UNION STATION PROJECT

TRACK DRAWINGS
GOLD LINE PLAN AND PROFILE
GL STA 107+52.83 TO GL STA 113+49.51

CONTRACT NO
DRAWING NO TR-112
REV
SCALE HORIZ: 1"=40'
VERT: 1"=10'

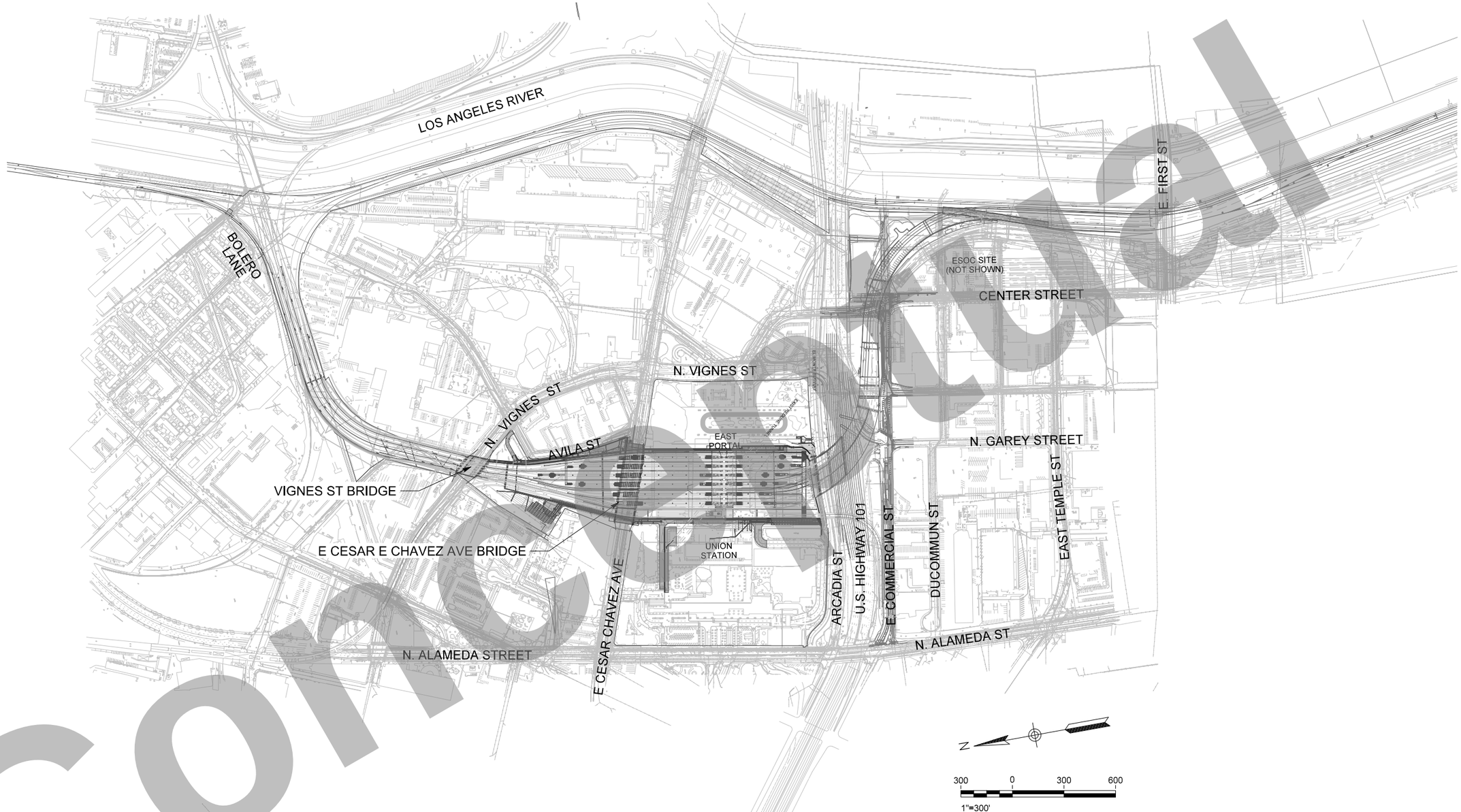

Concept

CONCEPTUAL DESIGN SUBMITTAL
NOT FOR CONSTRUCTION

THE PREPARATION OF THIS DRAWING HAS BEEN FINANCED IN PART THROUGH A GRANT FROM THE U.S. DEPARTMENT OF TRANSPORTATION, FEDERAL TRANSIT ADMINISTRATION (FTA), UNDER THE FEDERAL TRANSIT ACT OF 1964, AS AMENDED, AND IN PART BY THE TAXES OF THE CITIZENS OF LOS ANGELES COUNTY AND OF THE STATE OF CALIFORNIA.

REV	DATE	BY	APP	REG NO	EXPIRES	SEAL HOLDER	DESCRIPTION

DESIGNED BY
DRAWN BY
CHECKED BY
IN CHARGE
DATE 7/13/2021

REGISTERED PROFESSIONAL ENGINEER — No. — EXP. — CIVIL — STATE OF CALIFORNIA

Metro

LOS ANGELES COUNTY
METROPOLITAN TRANSPORTATION AUTHORITY

HDR ENGINEERING
350 S. GRAND AVENUE
SUITE 2900
LOS ANGELES, CA 90071
(213) 239-5800

SUBMITTED: _____ PROJECT MANAGER

APPROVED: _____

LINK UNION STATION PROJECT

OFFSITE STRUCTURES
KEY MAP

CONTRACT NO
DRAWING NO ST-000 REV
SCALE 1"=300'
SHEET NO 18 of 72

Plot Driver=$PLTDRVS$ Pentable=PlotStamp.tbl USER = KWARFIEL 2:06:09 PM 7/9/2021 $FILE$

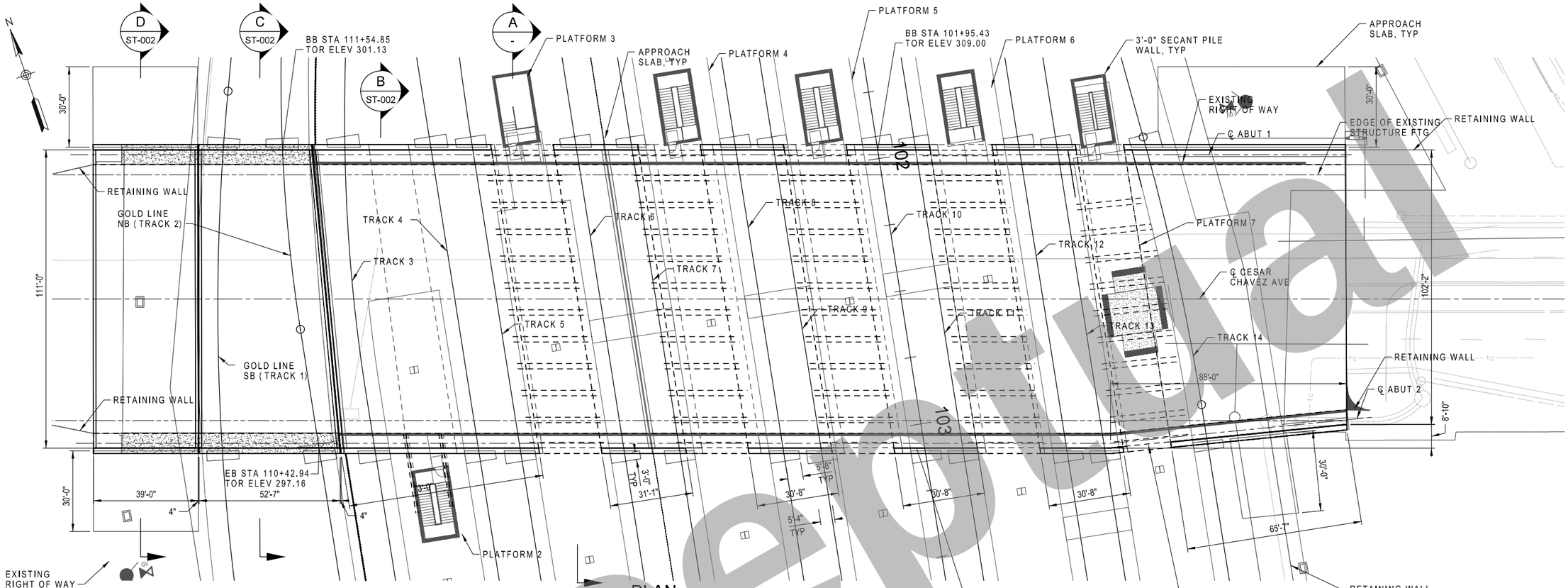

PLAN
1"=20'-0"

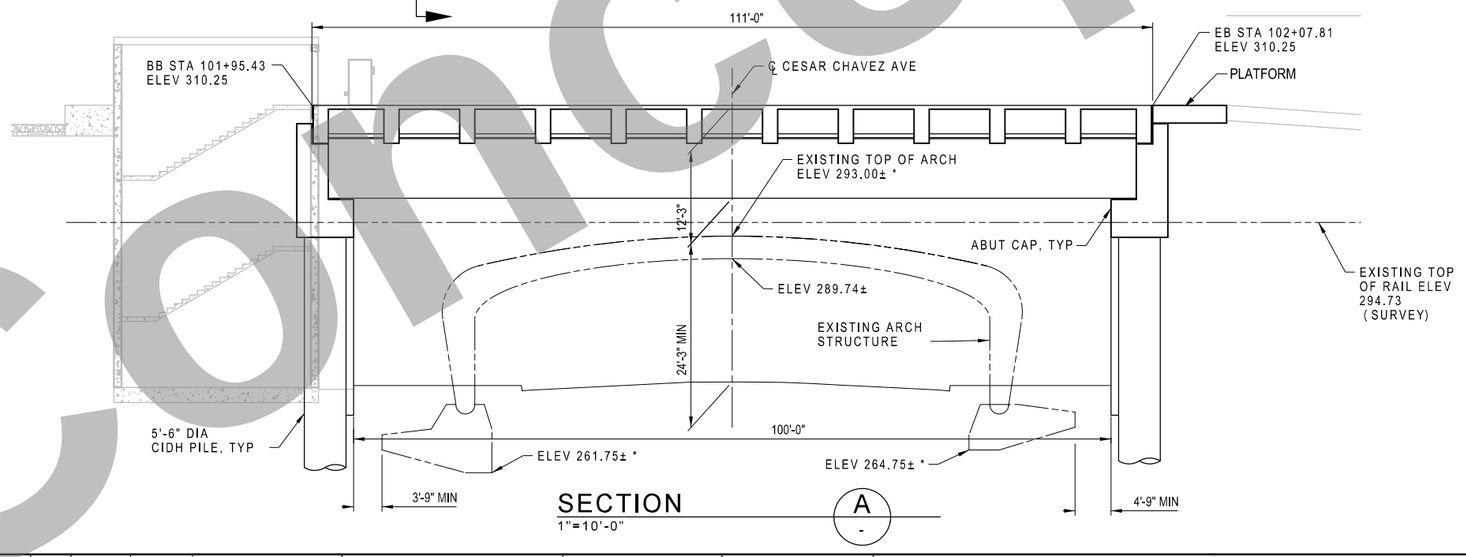

SECTION
1"=10'-0"

A
-

NOTE:

1. FOR SECTION SEE SHEET NO.2

LEGEND:

INDICATES EXISTING STRUCTURE
INDICATES NEW STRUCTURE

NOTES OF DESIGN LOAD :

ADDITIONAL DEAD LOADS:	30" DEEP BALLAST (120 PCF)
LIVE LOADING:	
TRACK 1 & 2:	LIGHT RAIL VEHICLES (LRV) AND LIGHT RAIL MAINTENANCE VEHICLES (LP)
TRACK 3 THRU 14:	COOPER E-60
TRACK 3 THRU 6:	ACCOMMODATE HSR VEHICLES
ACCESS ROAD BRIDGE:	HL93

CONCEPTUAL DESIGN SUBMITTAL
NOT FOR CONSTRUCTION

Conceptual

THE PREPARATION OF THIS DRAWING HAS BEEN FINANCED IN PART THROUGH A GRANT FROM THE U.S. DEPARTMENT OF TRANSPORTATION, FEDERAL TRANSIT ADMINISTRATION (FTA), UNDER THE FEDERAL TRANSIT ACT OF 1964, AS AMENDED, AND IN PART BY THE TAXES OF THE CITIZENS OF LOS ANGELES COUNTY AND OF THE STATE OF CALIFORNIA.

REV	DATE	BY	APP	REG NO	EXPIRES	SEAL HOLDER	DESCRIPTION

DESIGNED BY L.LIU
DRAWN BY G.WEI
CHECKED BY X.WU
IN CHARGE X.WU
DATE 7/13/2021

REGISTERED PROFESSIONAL ENGINEER
No. Exp. CIVIL
STATE OF CALIFORNIA

Metro
LOS ANGELES COUNTY
METROPOLITAN TRANSPORTATION AUTHORITY

IDC CONSULTING ENGINEERS
303 S HARBOR BLVD.
SUITE 710
ANAHEIM, CA 92805
(714) 525-0070

HDR ENGINEERING
350 S. GRAND AVENUE
SUITE 2850
LOS ANGELES, CA 90071
(213) 2394800

SUBMITTED: _____ PROJECT MANAGER
APPROVED: _____

LINK UNION STATION PROJECT
OFFSITE STRUCTURES
CONCEPTUAL GENERAL PLAN - NO. 1
CESAR CHAVEZ AVE BRIDGE

CONTRACT NO
DRAWING NO ST-001
REV 0
SCALE AS NOTED
SHEET NO 19 of 72

Plot Driver=$PLTDRV$$ Pentable=PlotStamp.tbl USER = mshahin 5:35:49 PM 6/10/2020 $FILE$

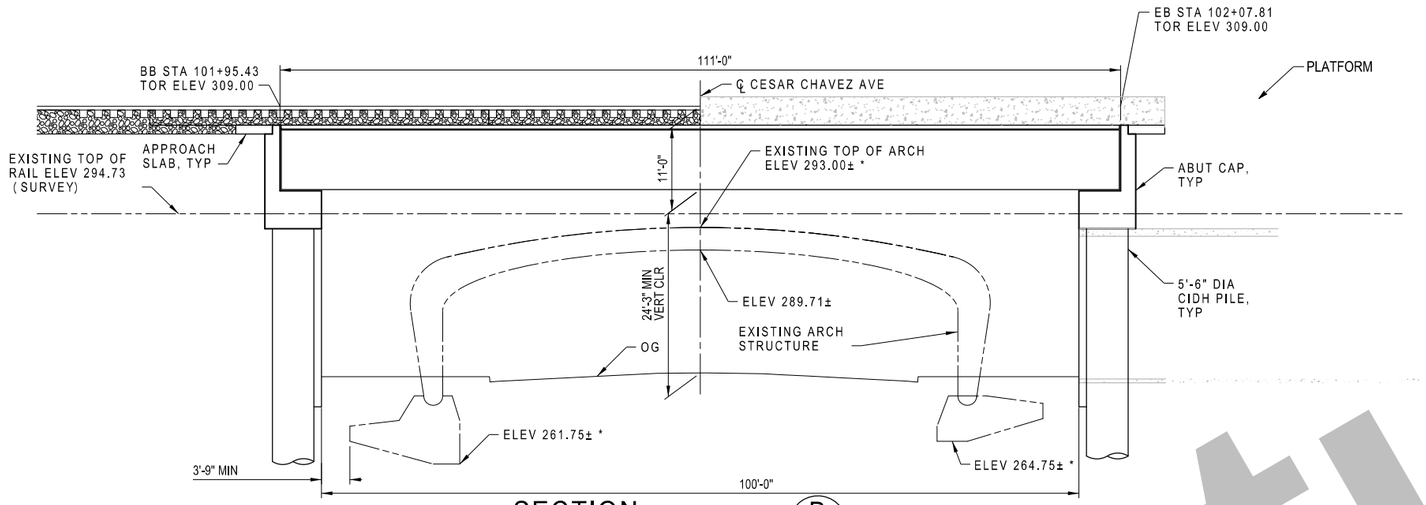

SECTION B
1"=10'-0"
ST-001

* EXISTING ELEVATIONS ARE FROM AS-BUILT PLAN, WITH ADJUSTMENT OF DATUM DIFFERENCE BETWEEN NGVD 29 AND NAVD 88

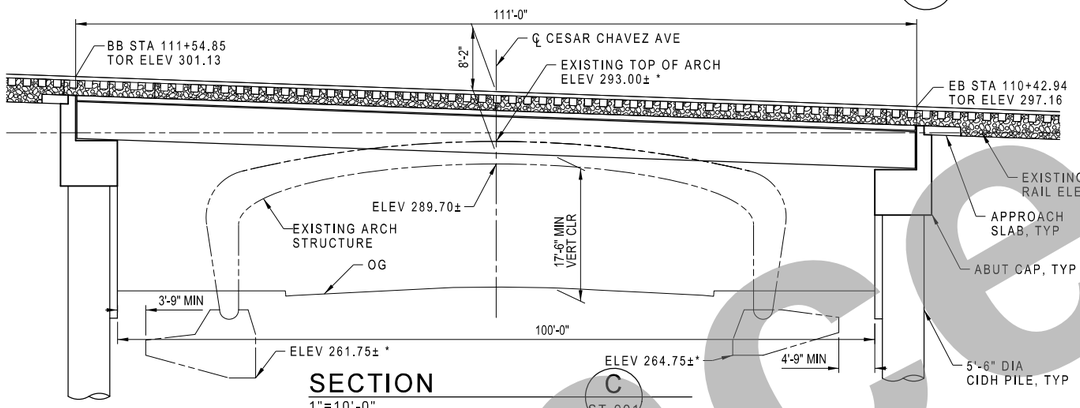

SECTION C
1"=10'-0"
ST-001

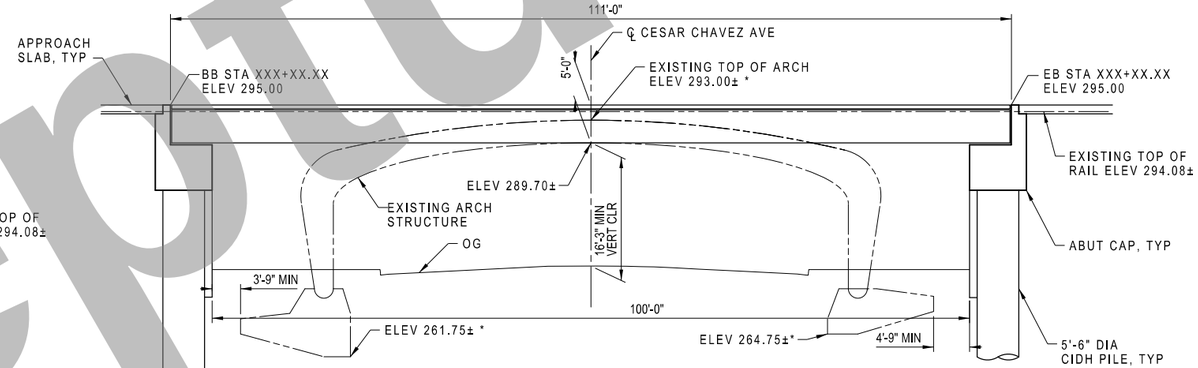

SECTION D
1"=10'-0"
ST-001

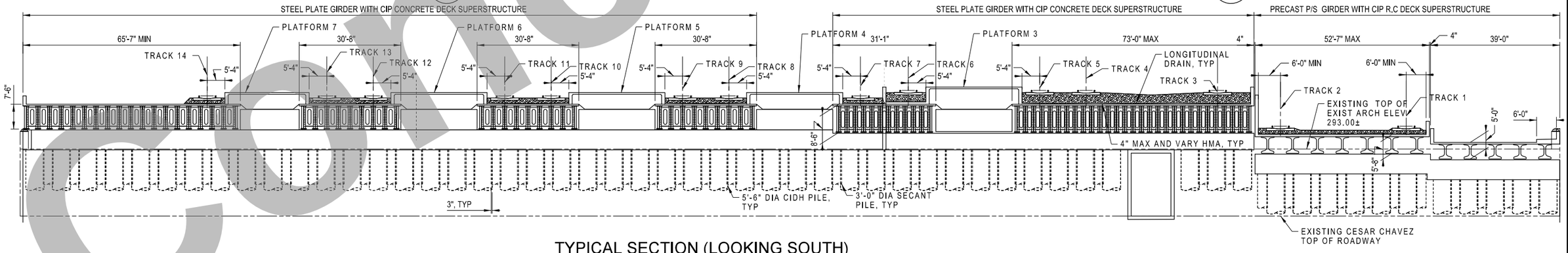

TYPICAL SECTION (LOOKING SOUTH)
1" = 15' -0"

CONCEPTUAL DESIGN SUBMITTAL
NOT FOR CONSTRUCTION

Conceptual

THE PREPARATION OF THIS DRAWING HAS BEEN FINANCED IN PART THROUGH A GRANT FROM THE U.S. DEPARTMENT OF TRANSPORTATION, FEDERAL TRANSIT ADMINISTRATION (FTA), UNDER THE FEDERAL TRANSIT ACT OF 1964, AS AMENDED, AND IN PART BY THE TAXES OF THE CITIZENS OF LOS ANGELES COUNTY AND OF THE STATE OF CALIFORNIA.

REV	DATE	BY	APP	REG NO	EXPIRES	SEAL HOLDER	DESCRIPTION

DESIGNED BY L.LIU
DRAWN BY G.WEI
CHECKED BY X.WU
IN CHARGE X.WU
DATE 7/13/2021

REGISTERED PROFESSIONAL ENGINEER — No. Exp. CIVIL — STATE OF CALIFORNIA

Metro
LOS ANGELES COUNTY
METROPOLITAN TRANSPORTATION AUTHORITY

IDC CONSULTING ENGINEERS
300 S.HARBOR BLVD.
SUITE 710
ANAHEIM, CA 92805
(714) 520-9070

HDR ENGINEERING
350 S. GRAND AVENUE
SUITE 3200
LOS ANGELES, CA 90071
(213) 236-0800

SUBMITTED: _____ PROJECT MANAGER
APPROVED: _____

LINK UNION STATION PROJECT

OFFSITE STRUCTURES
CONCEPTUAL GENERAL PLAN - NO. 2
CESAR CHAVEZ AVE BRIDGE

CONTRACT NO
DRAWING NO ST-002
REV 0
SCALE AS NOTED
SHEET NO 20 of 72

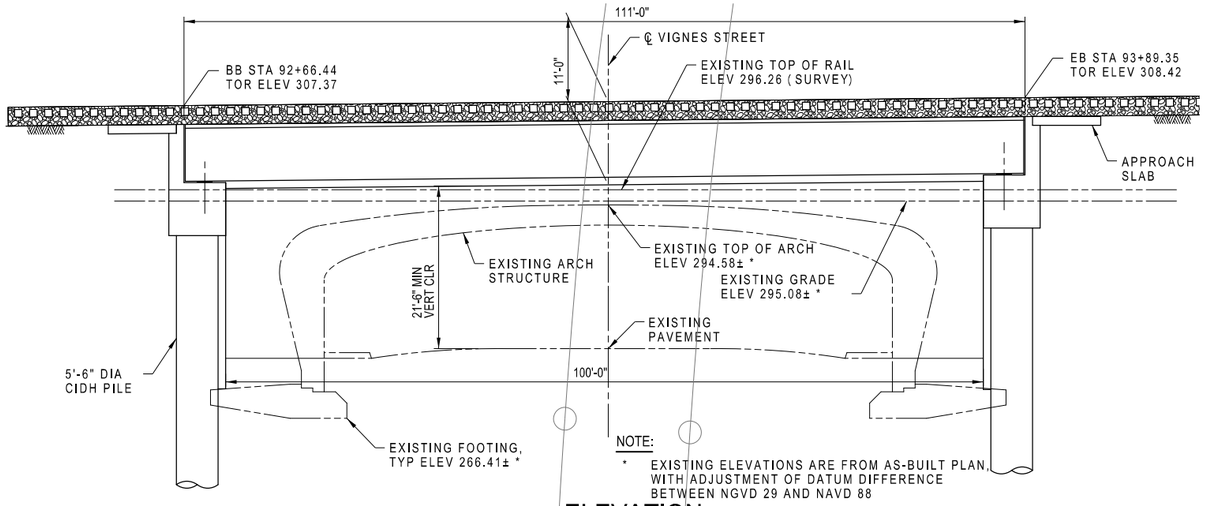

NOTE:

* EXISTING ELEVATIONS ARE FROM AS-BUILT PLAN WITH ADJUSTMENT OF DATUM DIFFERENCE BETWEEN NGVD 29 AND NAVD 88

ELEVATION

1"=10'-0"

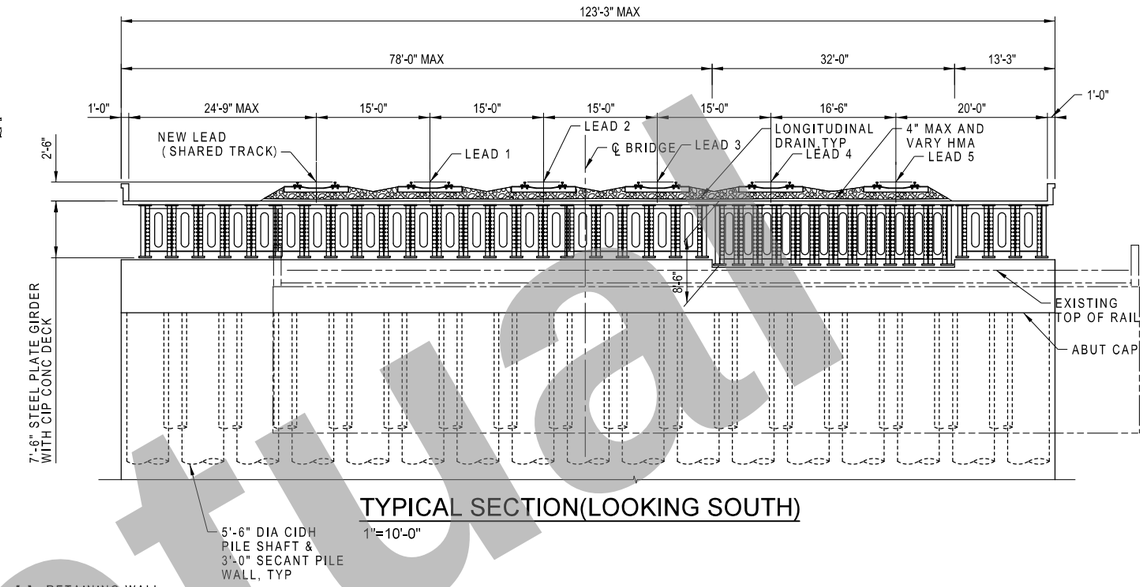

TYPICAL SECTION(LOOKING SOUTH)

1"=10'-0"

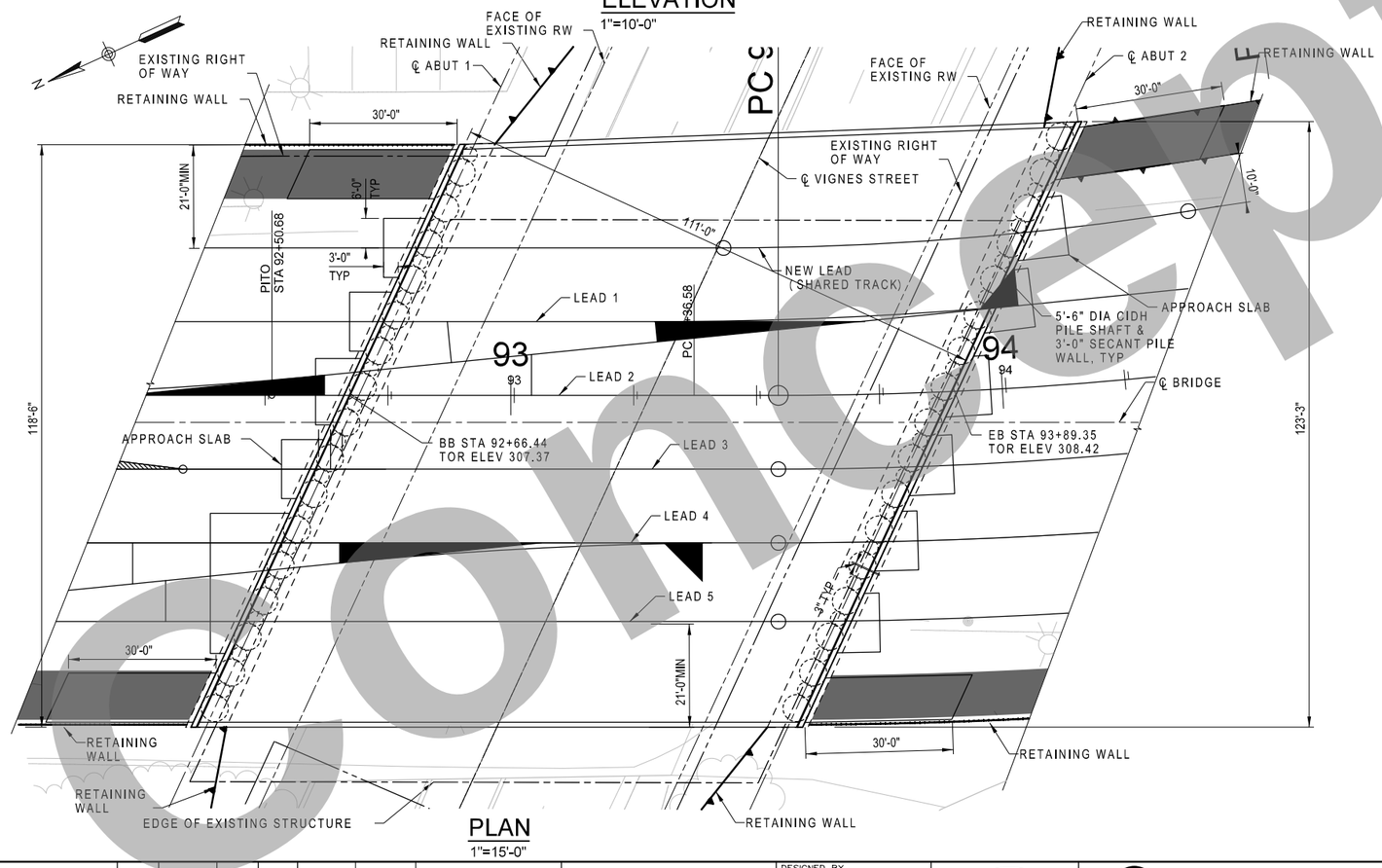

PLAN

1"=15'-0"

NOTE:

1. ALL SPACINGS PROVIDED ARE PERPENDICULAR TO CENTER LINE OF THE BRIDGE

LEGEND:

- - - INDICATES EXISTING STRUCTURE

——— INDICATES NEW STRUCTURE

NOTES OF DESIGN LOAD :

ADDITIONAL DEAD LOADS:	30" DEEP BALLAST (120 PCF)
LIVE LOADING:	
ALL TRACKS:	COOPER E-60
LEAD 4 & LEAD 5:	ACCOMMODATE HSR VEHICLES
ACCESS ROAD BRIDGE:	HL93

CONCEPTUAL DESIGN SUBMITTAL
NOT FOR CONSTRUCTION

Conceptual

THE PREPARATION OF THIS DRAWING HAS BEEN FINANCED IN PART THROUGH A GRANT FROM THE U.S. DEPARTMENT OF TRANSPORTATION, FEDERAL TRANSIT ADMINISTRATION (FTA), UNDER THE FEDERAL TRANSIT ACT OF 1964, AS AMENDED, AND IN PART BY THE TAXES OF THE CITIZENS OF LOS ANGELES COUNTY AND OF THE STATE OF CALIFORNIA.

REV	DATE	BY	APP	REG NO	EXPIRES	SEAL HOLDER	DESCRIPTION

DESIGNED BY L.LIU
DRAWN BY G.WEI
CHECKED BY X.WU
IN CHARGE X.WU
DATE 7/13/2021

REGISTERED PROFESSIONAL ENGINEER — No. Exp. CIVIL — STATE OF CALIFORNIA

Metro

LOS ANGELES COUNTY
METROPOLITAN TRANSPORTATION AUTHORITY

IDC CONSULTING ENGINEERS
300 S HARBOR BLVD.
SUITE 710
ANAHEIM, CA 92805
(714) 520-9070

HDR ENGINEERING
350 S. GRAND AVENUE
29TH FLOOR
LOS ANGELES, CA 90071
(213) 2390600

SUBMITTED: _____ PROJECT MANAGER

APPROVED: _____

LINK UNION STATION PROJECT

CONCEPTUAL GENERAL PLAN
VIGNES ST BRIDGE

CONTRACT NO

DRAWING NO ST-003 REV 0

SCALE AS NOTED

SHEET NO 21 of 72

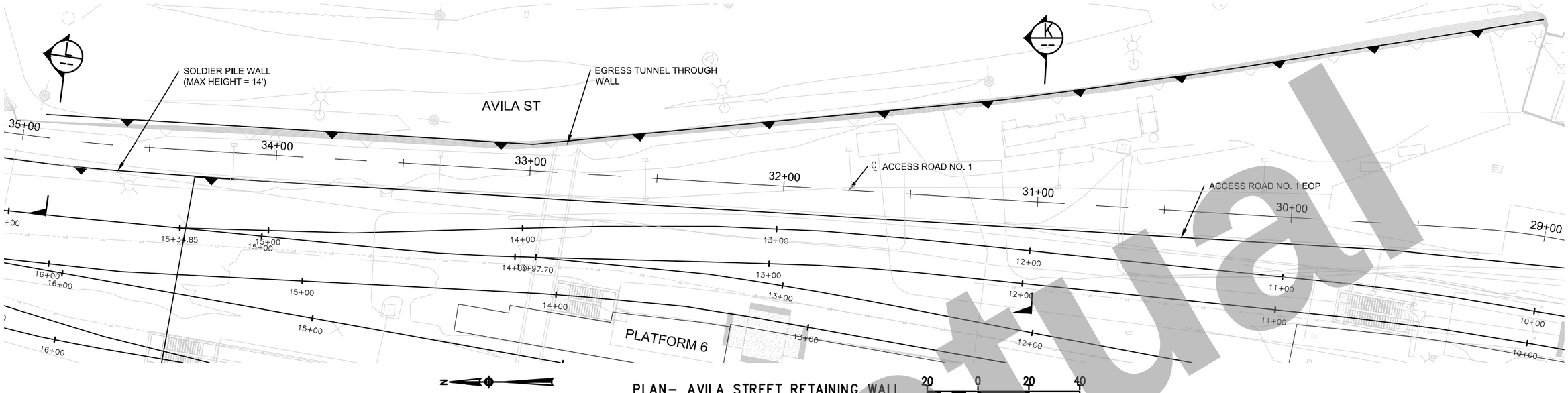

PLAN– AVILA STREET RETAINING WALL

1"=20'-0"

20 0 20 40

1"=20'

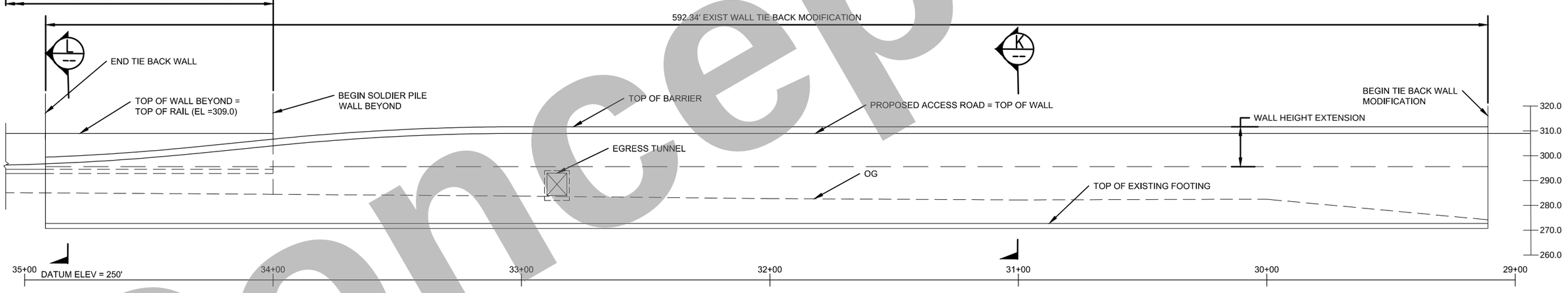

DEVELOPED ELEVATION– AVILA STREET RETAINING WALL

1"=20'-0"

20 0 20 40

1"=20'

Conceptual

CONCEPTUAL DESIGN SUBMITTAL
NOT FOR CONSTRUCTION

THE PREPARATION OF THIS DRAWING HAS BEEN FINANCED IN PART THROUGH A GRANT FROM THE U.S. DEPARTMENT OF TRANSPORTATION, FEDERAL TRANSIT ADMINISTRATION (FTA), UNDER THE FEDERAL TRANSIT ACT OF 1964, AS AMENDED, AND IN PART BY THE TAXES OF THE CITIZENS OF LOS ANGELES COUNTY AND OF THE STATE OF CALIFORNIA.

REV	DATE	BY	APP	REG NO	EXPIRES	SEAL HOLDER	DESCRIPTION

DESIGNED BY G. GUEVARA
DRAWN BY C. HUANG
CHECKED BY P. LIU
IN CHARGE G. GUEVARA
DATE 7/13/202120

Metro
LOS ANGELES COUNTY
METROPOLITAN TRANSPORTATION AUTHORITY

PacRim Engineering
1820 EAST STREET, SUITE 110
SANTA ANA, CA 92705
T: (714) 683-0470

HDR ENGINEERING
350 S. GRAND AVENUE
SUITE 2900
LOS ANGELES, CA 90071
(213) 228-5800

SUBMITTED: _____ PROJECT MANAGER

APPROVED: _____

LINK UNION STATION PROJECT
AVILA ST RETAINING WALL
GENERAL PLAN

CONTRACT NO

DRAWING NO SW-001 | REV 0

SCALE 1"=20'-0"

SHEET NO 22 of 72

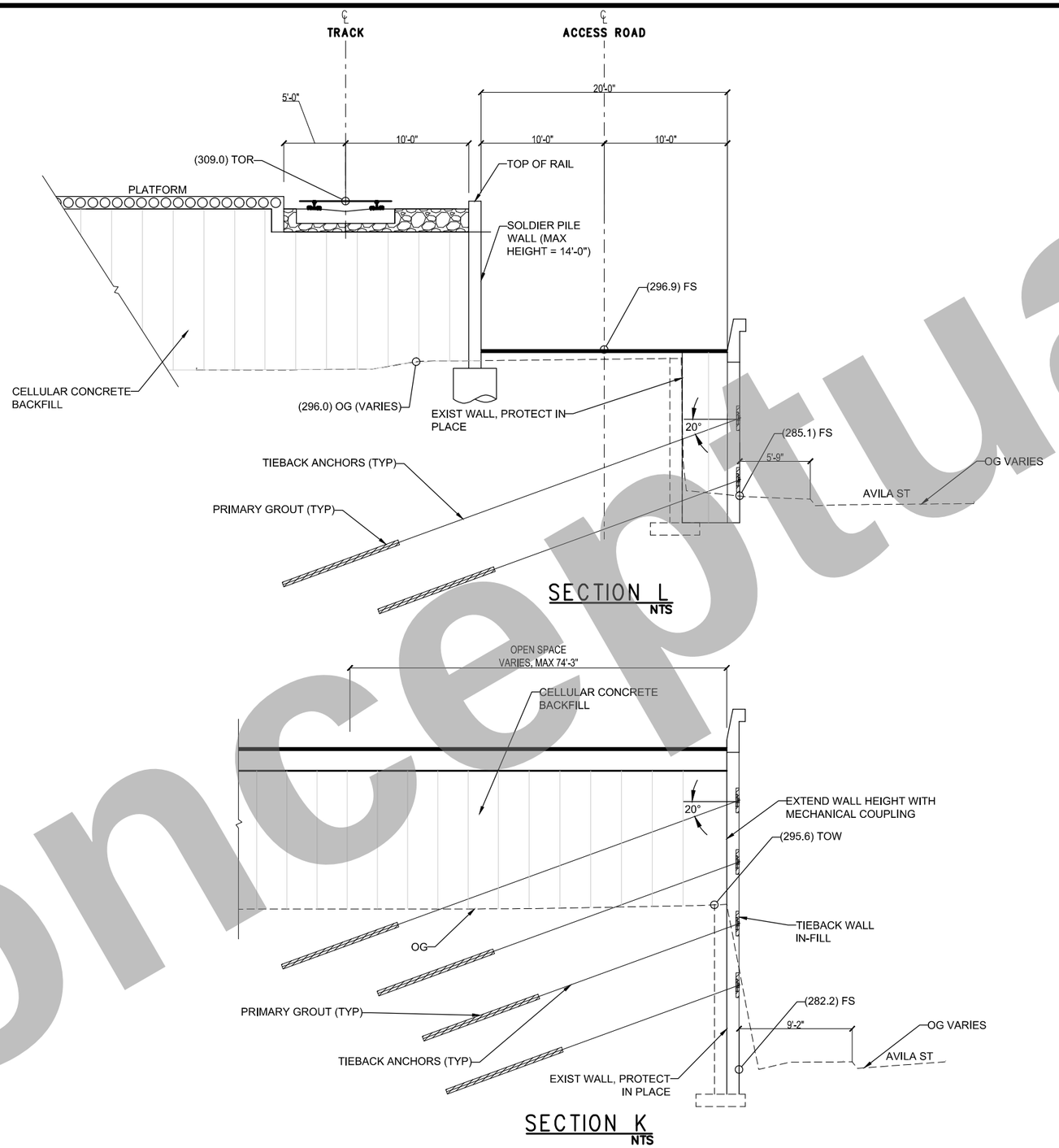

SECTION L
NTS

SECTION K
NTS

LEGEND:

- TIEBACK WALL IN-FILL
- LIGHTWEIGHT CELLULAR CONCRETE BACKFILL
- BALLAST

Conceptual

CONCEPTUAL DESIGN SUBMITTAL
NOT FOR CONSTRUCTION

THE PREPARATION OF THIS DRAWING HAS BEEN FINANCED IN PART THROUGH A GRANT FROM THE U.S. DEPARTMENT OF TRANSPORTATION, FEDERAL TRANSIT ADMINISTRATION (FTA), UNDER THE FEDERAL TRANSIT ACT OF 1964, AS AMENDED, AND IN PART BY THE TAXES OF THE CITIZENS OF LOS ANGELES COUNTY AND OF THE STATE OF CALIFORNIA.

REV	DATE	BY	APP	REG NO	EXPIRES	SEAL HOLDER	DESCRIPTION

DESIGNED BY: G. GUEVARA
DRAWN BY: C. HUANG
CHECKED BY: P. LIU
IN CHARGE: G. GUEVARA
DATE: 7/13/202120

Metro
LOS ANGELES COUNTY
METROPOLITAN TRANSPORTATION AUTHORITY

PacRim Engineering
1820 EAST STREET, SUITE 110
SANTA ANA, CA 92705
T: (714) 683-0470

HDR ENGINEERING
350 S. GRAND AVENUE
SUITE 2900
LOS ANGELES, CA 90071
(213) 228-5800

SUBMITTED: _____ PROJECT MANAGER

APPROVED: _____

LINK UNION STATION PROJECT
AVILA ST RETAINING WALL
RETROFIT TIEBACK ANCHORS DETAILS

CONTRACT NO:
DRAWING NO: SW-002
REV: 0
SCALE: NTS
SHEET NO: 23 of 72

GENERAL NOTES

1. FOR LEVEL DATUMS, SEE CIVIL DRAWINGS.
2. FOR DETAILS OF FIRE ACCESS ROAD, SEE CIVIL DRAWINGS.
3. FOR DETAILS OF TRACK ALIGNMENT, SEE TRACK DRAWINGS.
4. FOR DRAINAGE DETAILS, SEE DRAINAGE DRAWINGS.
5. FOR EXISTING CONDITIONS, SEE METRO RAIL PROJECT CONTRACT A135 REFERENCE DWGS.

GRAPHICS LEGEND

- EXISTING STRUCTURE
- EARTH
- STRUCTURE BELOW
- STRUCTURE ABOVE
- TRACK CENTERLINE
- PROPOSED DEMOLITION

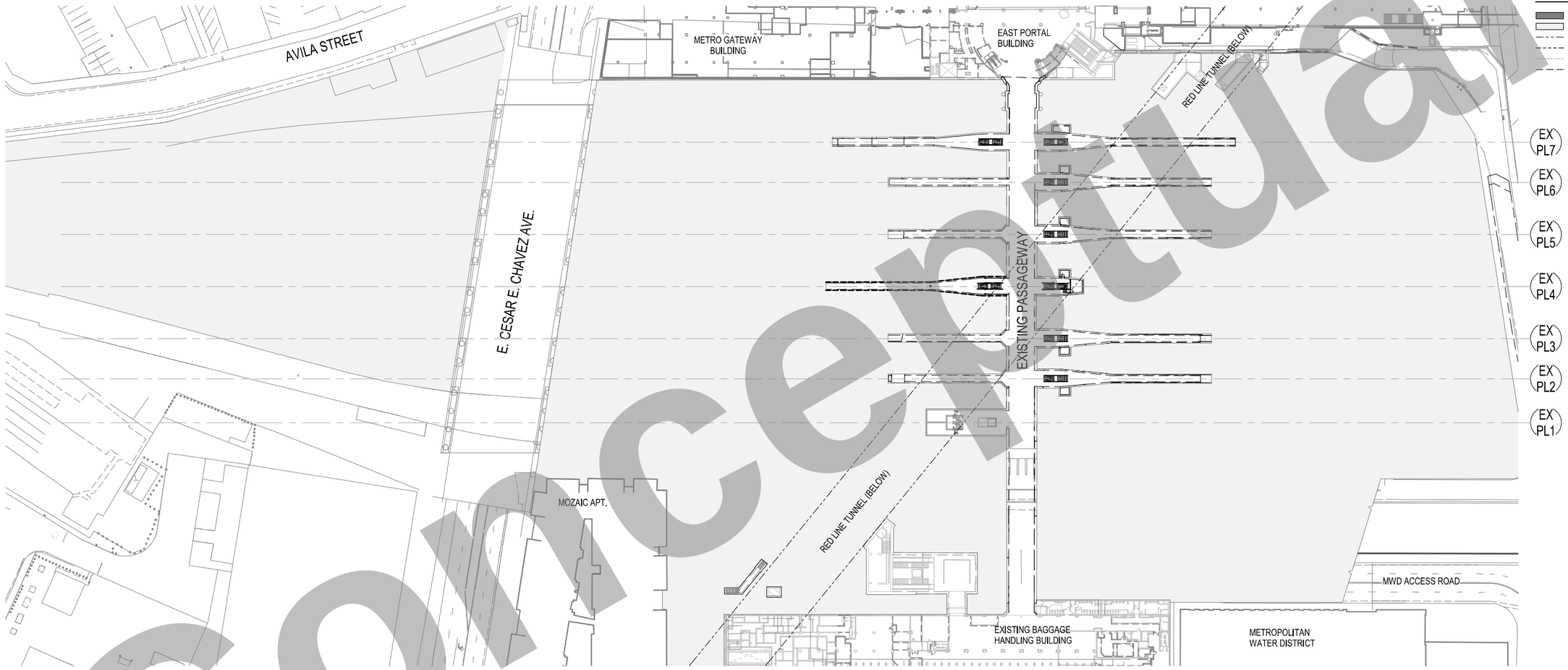

1 / AX-001 DEMOLITION PLAN - PASSAGEWAY LEVEL
1" = 60'-0"

0' 30' 60' 120'

KEY PLAN

CONCEPTUAL DESIGN SUBMITTAL
NOT FOR CONSTRUCTION

Conceptual

THE PREPARATION OF THIS DRAWING HAS BEEN FINANCED IN PART THROUGH A GRANT FROM THE U.S. DEPARTMENT OF TRANSPORTATION, FEDERAL TRANSIT ADMINISTRATION (fta), UNDER THE FEDERAL TRANSIT ACT OF 1964, AS AMENDED, AND IN PART BY THE TAXES OF THE CITIZENS OF LOS ANGELES COUNTY AND OF THE STATE OF CALIFORNIA

REV	DATE	BY	APP	REG NO	EXPIRES	SEAL HOLDER	DESCRIPTION

DESIGNED BY: M. MAH
DRAWN BY: M. PERROS
CHECKED BY: M. RAMIREZ
IN CHARGE: T. KIM
DATE: 7/13/2021

Metro
LOS ANGELES COUNTY
METROPOLITAN TRANSPORTATION AUTHORITY

VSA, INC.
975 S. FAIR OAKS AVENUE
PASADENA, CA 91105
(213) 972-0700

HDR ENGINEERING
350 S GRAND AVENUE
SUITE 2900
LOS ANGELES, CA 90071
(213) 239-6800

SUBMITTED: _____ PROJECT MANAGER

APPROVED: _____

LINK UNION STATION PROJECT
ARCHITECTURAL DRAWINGS
DEMOLITION PLAN - PASSAGEWAY LEVEL

CONTRACT NO.
DRAWING NO. AX-001 REV. 0
SCALE 1" = 60'-0"
SHEET NO. 24 of 72

GENERAL NOTES

1. FOR LEVEL DATUMS, SEE CIVIL DRAWINGS.
2. FOR DETAILS OF FIRE ACCESS ROAD, SEE CIVIL DRAWINGS.
3. FOR DETAILS OF TRACK ALIGNMENT, SEE TRACK DRAWINGS.
4. FOR DRAINAGE DETAILS, SEE DRAINAGE DRAWINGS.
5. FOR EXISTING CONDITIONS, SEE METRO RAIL PROJECT CONTRACT A135 REFERENCE DWGS.

GRAPHICS LEGEND

- EXISTING STRUCTURE
- EARTH
- STRUCTURE BELOW
- STRUCTURE ABOVE
- TRACK CENTERLINE
- PROPOSED DEMOLITION

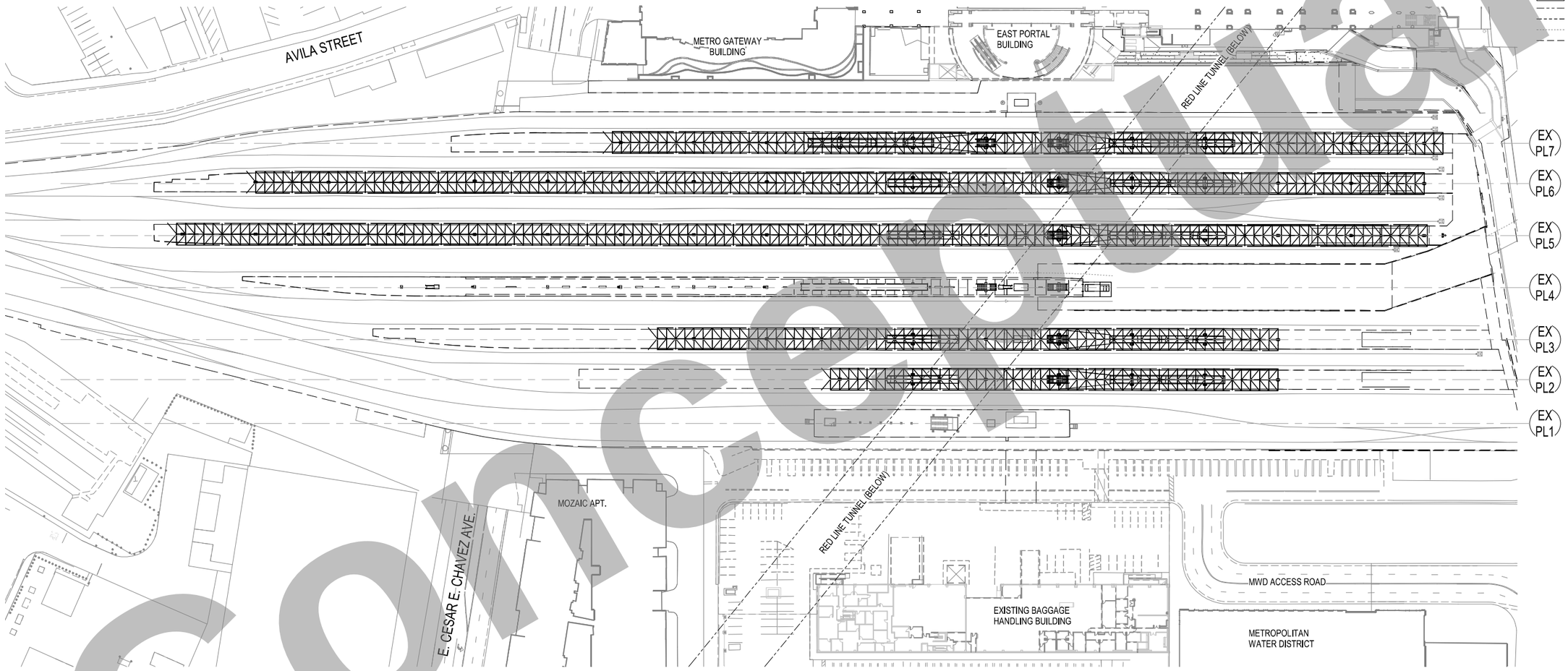

1 AX-002 DEMOLITION PLAN - PLATFORM LEVEL
1" = 60'-0"

0' 30' 60' 120'

KEY PLAN

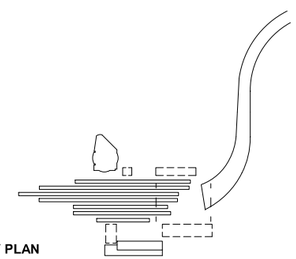

CONCEPTUAL DESIGN SUBMITTAL
NOT FOR CONSTRUCTION

Conceptual

THE PREPARATION OF THIS DRAWING HAS BEEN FINANCED IN PART THROUGH A GRANT FROM THE U.S. DEPARTMENT OF TRANSPORTATION, FEDERAL TRANSIT ADMINISTRATION (fta), UNDER THE FEDERAL TRANSIT ACT OF 1964, AS AMENDED, AND IN PART BY THE TAXES OF THE CITIZENS OF LOS ANGELES COUNTY AND OF THE STATE OF CALIFORNIA

REV	DATE	BY	APP	REG NO	EXPIRES	SEAL HOLDER	DESCRIPTION

DESIGNED BY M. MAH
DRAWN BY M. PERROS
CHECKED BY M. RAMIREZ
IN CHARGE T. KIM
DATE 7/13/2021

Metro
LOS ANGELES COUNTY
METROPOLITAN TRANSPORTATION AUTHORITY

VIA, INC.
975 S. FAIR OAKS AVENUE
PASADENA, CA 91105
(213) 972-6700

HDR ENGINEERING
350 S GRAND AVENUE
SUITE 2900
LOS ANGELES, CA 90071
(213) 239-6800

SUBMITTED: _____ PROJECT MANAGER
APPROVED: _____

LINK UNION STATION PROJECT
ARCHITECTURAL DRAWINGS
DEMOLITION PLAN - PLATFORM LEVEL

CONTRACT NO.
DRAWING NO. AX-002 REV. 0
SCALE 1" = 60'-0"
SHEET NO. 25 of 72

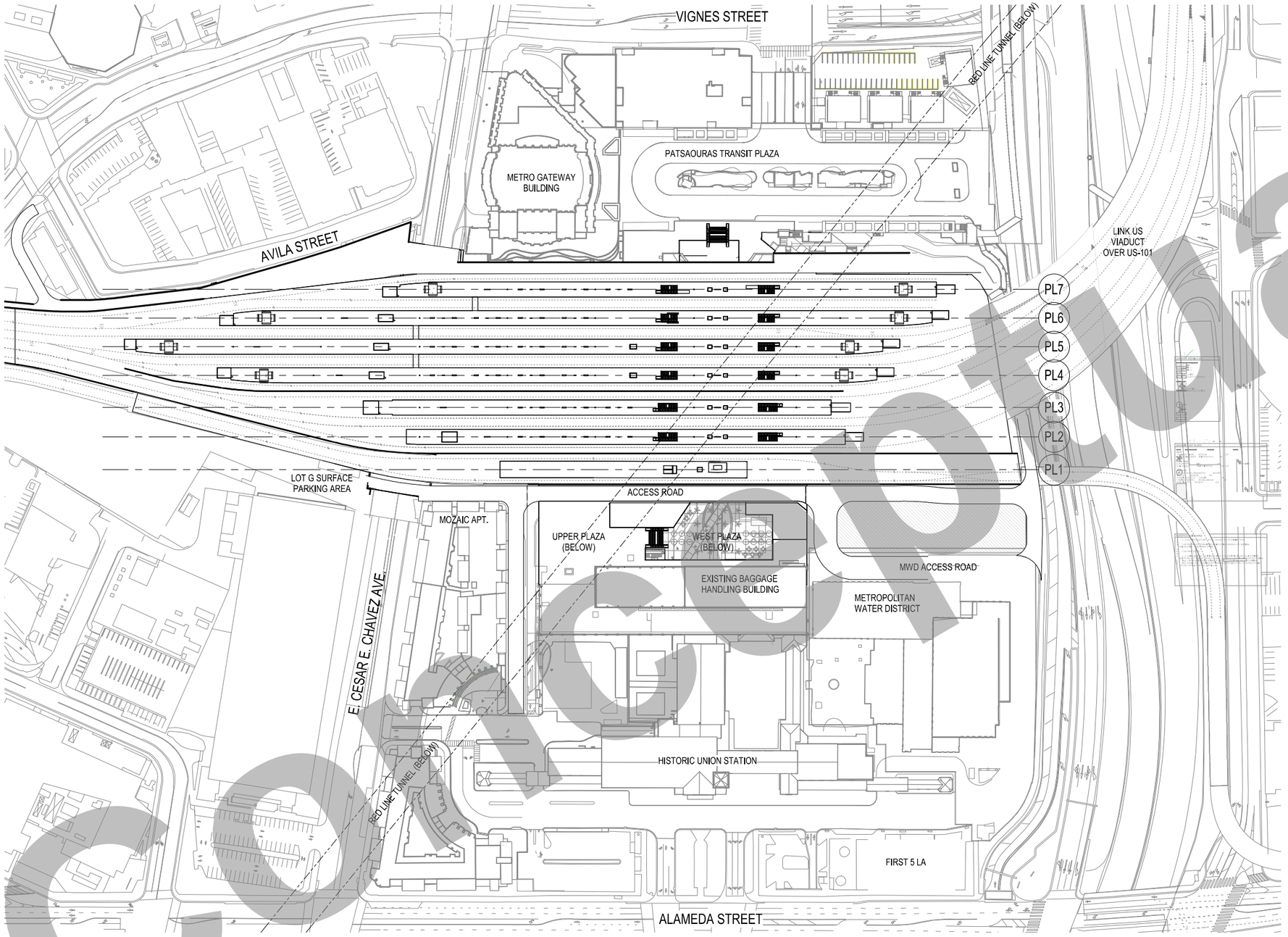

1 A-000 SITE PLAN
1" = 100'-0"

0' 50' 100' 200'

GENERAL NOTES

1. EXISTING PASSENGER TUNNEL TO REMAIN IN SERVICE. CONTRACTOR TO PROVIDE PEDESTRIAN PROTECTION AGAINST ANY AND ALL HAZARDS. PEDESTRIAN PROTECTION SHALL CONFORM TO ALL REGULATIONS.
2. FOR LEVEL DATUMS, SEE CIVIL DRAWINGS.
3. FOR DETAILS OF FIRE ACCESS ROAD, SEE CIVIL DRAWINGS.
4. FOR DETAILS OF TRACK ALIGNMENT, SEE TRACK DRAWINGS.
5. FOR DRAINAGE DETAILS, SEE DRAINAGE DRAWINGS.
6. FOR EXISTING CONDITIONS, SEE METRO RAIL PROJECT CONTRACT A135 REFERENCE DWGS.

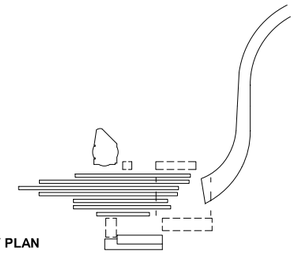

KEY PLAN

CONCEPTUAL DESIGN SUBMITTAL
NOT FOR CONSTRUCTION

Conceptual

THE PREPARATION OF THIS DRAWING HAS BEEN FINANCED IN PART THROUGH A GRANT FROM THE U.S. DEPARTMENT OF TRANSPORTATION, FEDERAL TRANSIT ADMINISTRATION (fta), UNDER THE FEDERAL TRANSIT ACT OF 1964, AS AMENDED, AND IN PART BY THE TAXES OF THE CITIZENS OF LOS ANGELES COUNTY AND OF THE STATE OF CALIFORNIA

REV	DATE	BY	APP	REG NO	EXPIRES	SEAL HOLDER	DESCRIPTION

DESIGNED BY: M. MAH
DRAWN BY: M. PERROS
CHECKED BY: M. RAMIREZ
IN CHARGE: T. KIM
DATE: 7/13/2021

Metro
LOS ANGELES COUNTY
METROPOLITAN TRANSPORTATION AUTHORITY

VSA, INC.
975 S. FAIR OAKS AVENUE
PASADENA, CA 91105
(213) 972-0700

HDR ENGINEERING
350 S GRAND AVENUE
SUITE 2900
LOS ANGELES, CA 90071
(213) 239-6800

SUBMITTED: _____ PROJECT MANAGER

APPROVED: _____

LINK UNION STATION PROJECT
ARCHITECTURAL DRAWINGS

SITE PLAN

CONTRACT NO.

DRAWING NO. A-000 REV. 0

SCALE 1" = 100'-0"

SHEET NO. 26 of 72

GENERAL NOTES

1. FOR LEVEL DATUMS, SEE CIVIL DRAWINGS.
2. FOR DETAILS OF FIRE ACCESS ROAD, SEE CIVIL DRAWINGS.
3. FOR DETAILS OF TRACK ALIGNMENT, SEE TRACK DRAWINGS.
4. FOR DRAINAGE DETAILS, SEE DRAINAGE DRAWINGS.
5. FOR EXISTING CONDITIONS, SEE METRO RAIL PROJECT CONTRACT A135 REFERENCE DWGS.

GRAPHICS LEGEND

- EXISTING STRUCTURE
- EARTH
- STRUCTURE BELOW
- STRUCTURE ABOVE
- TRACK CENTERLINE
- PROPOSED DEMOLITION

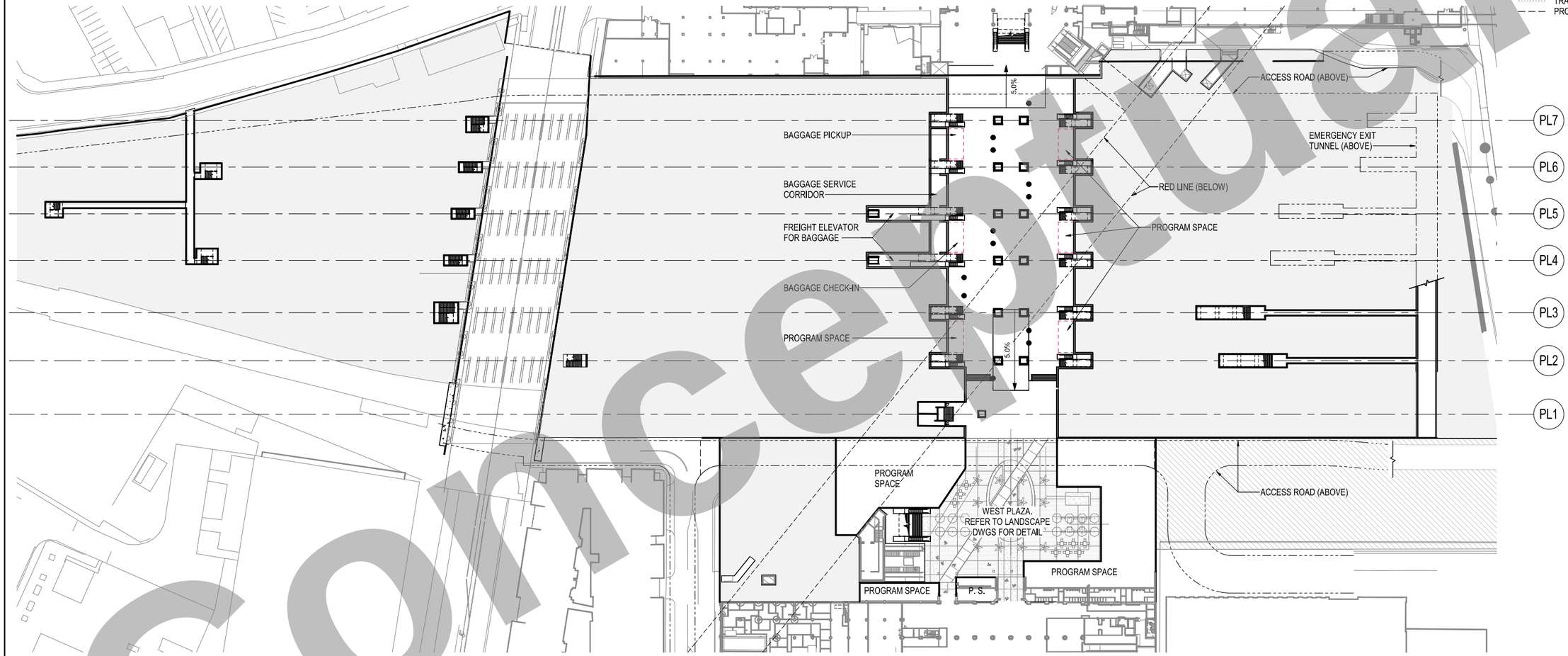

1 / A-010 OVERALL PASSAGEWAY PLAN
1" = 60'-0"

0' 30' 60' 120'

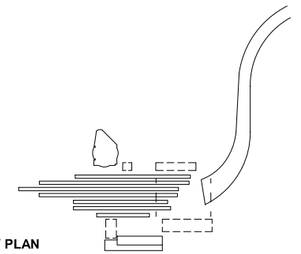

KEY PLAN

CONCEPTUAL DESIGN SUBMITTAL
NOT FOR CONSTRUCTION

Conceptual

THE PREPARATION OF THIS DRAWING HAS BEEN FINANCED IN PART THROUGH A GRANT FROM THE U.S. DEPARTMENT OF TRANSPORTATION, FEDERAL TRANSIT ADMINISTRATION (fta), UNDER THE FEDERAL TRANSIT ACT OF 1964, AS AMENDED, AND IN PART BY THE TAXES OF THE CITIZENS OF LOS ANGELES COUNTY AND OF THE STATE OF CALIFORNIA

REV	DATE	BY	APP	REG NO	EXPIRES	SEAL HOLDER	DESCRIPTION

DESIGNED BY: M. MAH
DRAWN BY: M. PERROS
CHECKED BY: M. RAMIREZ
IN CHARGE: T. KIM
DATE: 7/13/2021

Metro
LOS ANGELES COUNTY
METROPOLITAN TRANSPORTATION AUTHORITY

V&A, INC.
975 S. FAIR OAKS AVENUE
PASADENA, CA 91105
(213) 972-6700

HDR ENGINEERING
350 S GRAND AVENUE
SUITE 2600
LOS ANGELES, CA 90071
(213) 239-6800

SUBMITTED: _____ PROJECT MANAGER
APPROVED: _____

LINK UNION STATION PROJECT
ARCHITECTURAL DRAWINGS

OVERALL PASSAGEWAY PLAN

CONTRACT NO.
DRAWING NO. A-010 REV. 0
SCALE 1" = 60'-0"
SHEET NO. 27 of 72

GENERAL NOTES

1. FOR LEVEL DATUMS, SEE CIVIL DRAWINGS.
2. FOR DETAILS OF FIRE ACCESS ROAD, SEE CIVIL DRAWINGS.
3. FOR DETAILS OF TRACK ALIGNMENT, SEE TRACK DRAWINGS.
4. FOR DRAINAGE DETAILS, SEE DRAINAGE DRAWINGS.
5. FOR EXISTING CONDITIONS, SEE METRO RAIL PROJECT CONTRACT A135 REFERENCE DWGS.

GRAPHICS LEGEND

- EXISTING STRUCTURE
- EARTH
- STRUCTURE BELOW
- STRUCTURE ABOVE
- TRACK CENTERLINE
- PROPOSED DEMOLITION

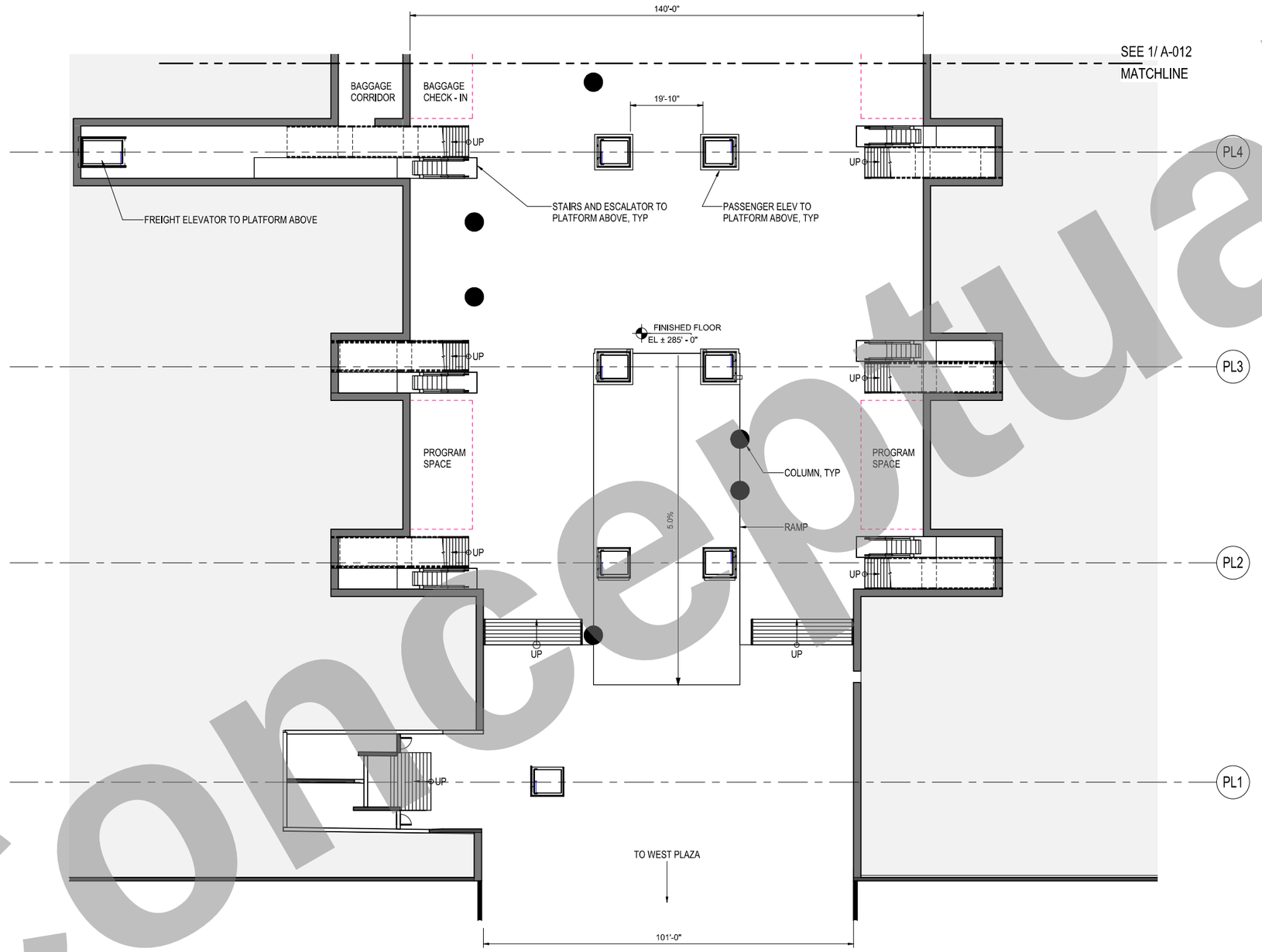

1 A-011 PASSAGEWAY PLANS - WEST
1/16" = 1'-0"

0' 8' 16' 32'

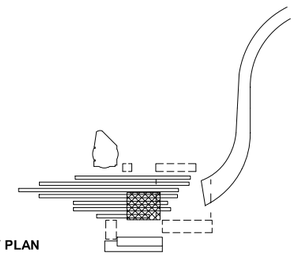

KEY PLAN

CONCEPTUAL DESIGN SUBMITTAL
NOT FOR CONSTRUCTION

Conceptual

THE PREPARATION OF THIS DRAWING HAS BEEN FINANCED IN PART THROUGH A GRANT FROM THE U.S. DEPARTMENT OF TRANSPORTATION, FEDERAL TRANSIT ADMINISTRATION (fta), UNDER THE FEDERAL TRANSIT ACT OF 1964, AS AMENDED, AND IN PART BY THE TAXES OF THE CITIZENS OF LOS ANGELES COUNTY AND OF THE STATE OF CALIFORNIA

REV	DATE	BY	APP	REG NO	EXPIRES	SEAL HOLDER	DESCRIPTION

DESIGNED BY: M. MAH
DRAWN BY: M. PERROS
CHECKED BY: M. RAMIREZ
IN CHARGE: T. KIM
DATE: 7/13/2021

Metro
LOS ANGELES COUNTY
METROPOLITAN TRANSPORTATION AUTHORITY

VSA, INC.
975 S. FAIR OAKS AVENUE
PASADENA, CA 91105
(213) 972-0700

HDR ENGINEERING
350 S GRAND AVENUE
SUITE 2900
LOS ANGELES, CA 90071
(213) 239-6800

SUBMITTED: _____ PROJECT MANAGER
APPROVED: _____

LINK UNION STATION PROJECT
ARCHITECTURAL DRAWINGS

PASSAGEWAY PLAN

CONTRACT NO.
DRAWING NO. A-011 REV. 0
SCALE 1/16" = 1'-0"
SHEET NO. 28 of 72

GENERAL NOTES

1. FOR LEVEL DATUMS, SEE CIVIL DRAWINGS.
2. FOR DETAILS OF FIRE ACCESS ROAD, SEE CIVIL DRAWINGS.
3. FOR DETAILS OF TRACK ALIGNMENT, SEE TRACK DRAWINGS.
4. FOR DRAINAGE DETAILS, SEE DRAINAGE DRAWINGS.
5. FOR EXISTING CONDITIONS, SEE METRO RAIL PROJECT CONTRACT A135 REFERENCE DWGS.

GRAPHICS LEGEND

- EXISTING STRUCTURE
- EARTH
- STRUCTURE BELOW
- STRUCTURE ABOVE
- TRACK CENTERLINE
- PROPOSED DEMOLITION

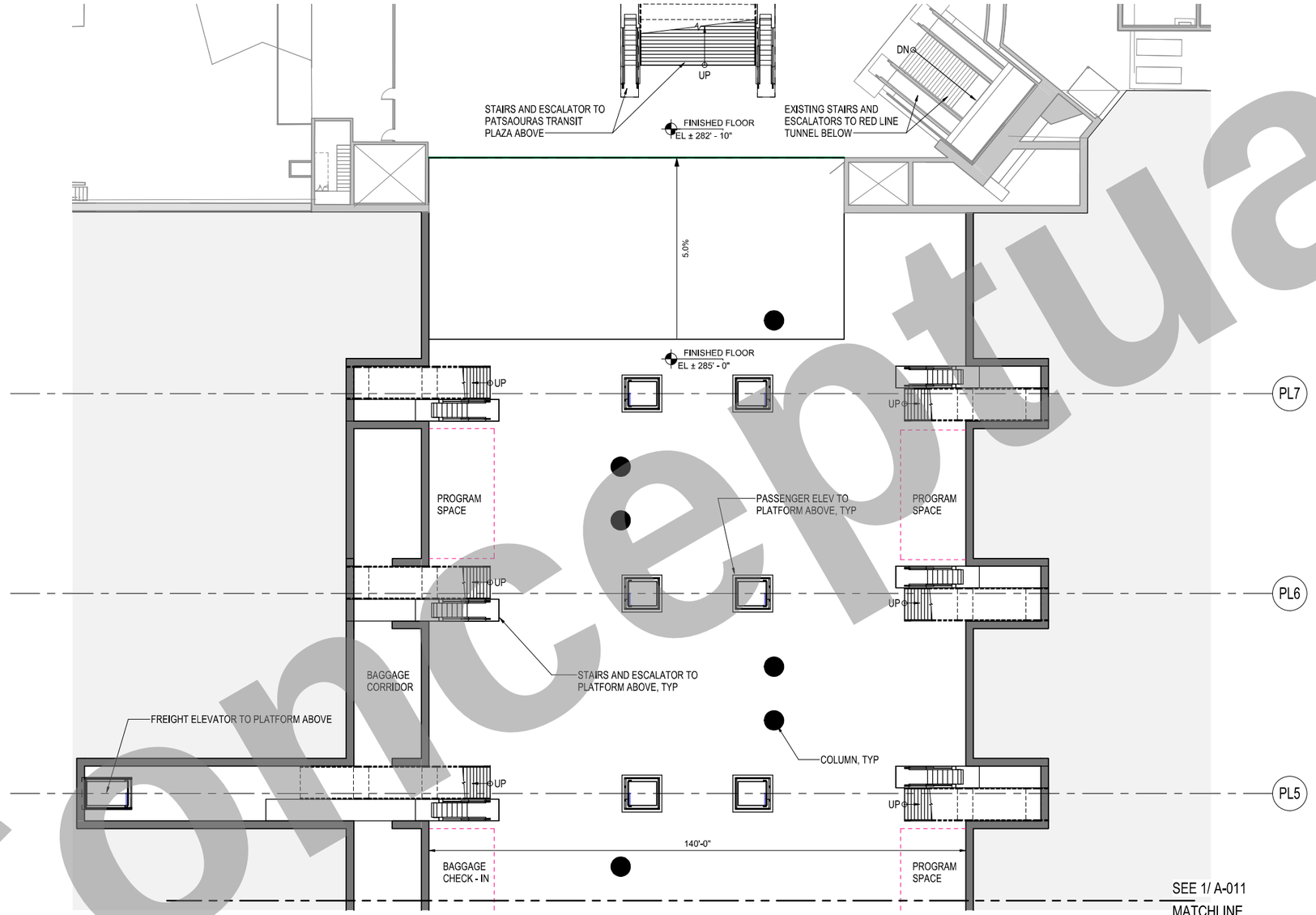

1 A-012 PASSAGEWAY PLANS - EAST
1/16" = 1'-0"

0' 8' 16' 32'

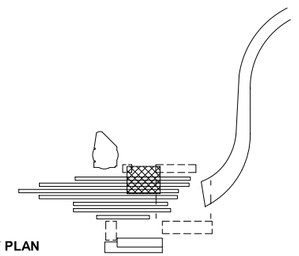

KEY PLAN

CONCEPTUAL DESIGN SUBMITTAL
NOT FOR CONSTRUCTION

Conceptual

THE PREPARATION OF THIS DRAWING HAS BEEN FINANCED IN PART THROUGH A GRANT FROM THE U.S. DEPARTMENT OF TRANSPORTATION, FEDERAL TRANSIT ADMINISTRATION (fta), UNDER THE FEDERAL TRANSIT ACT OF 1964, AS AMENDED, AND IN PART BY THE TAXES OF THE CITIZENS OF LOS ANGELES COUNTY AND OF THE STATE OF CALIFORNIA

REV	DATE	BY	APP	REG NO	EXPIRES	SEAL HOLDER	DESCRIPTION

DESIGNED BY M. MAH
DRAWN BY M. PERROS
CHECKED BY M. RAMIREZ
IN CHARGE T. KIM
DATE 7/13/2021

Metro
LOS ANGELES COUNTY
METROPOLITAN TRANSPORTATION AUTHORITY

V&A, INC.
875 S. FAIR OAKS AVENUE
PASADENA, CA 91105
(213) 972-0700

HDR ENGINEERING
350 S GRAND AVENUE
SUITE 2900
LOS ANGELES, CA 90071
(213) 239-6800

SUBMITTED: _____ PROJECT MANAGER
APPROVED: _____

LINK UNION STATION PROJECT
ARCHITECTURAL DRAWINGS

PASSAGEWAY PLAN

CONTRACT NO.
DRAWING NO. A-012 REV. 0
SCALE 1/16" = 1'-0"
SHEET NO. 29 of 72

GENERAL NOTES

1. FOR LEVEL DATUMS, SEE CIVIL DRAWINGS.
2. FOR DETAILS OF FIRE ACCESS ROAD, SEE CIVIL DRAWINGS.
3. FOR DETAILS OF TRACK ALIGNMENT, SEE TRACK DRAWINGS.
4. FOR DRAINAGE DETAILS, SEE DRAINAGE DRAWINGS.
5. FOR EXISTING CONDITIONS, SEE METRO RAIL PROJECT CONTRACT A135 REFERENCE DWGS.

GRAPHICS LEGEND

- EXISTING STRUCTURE
- EARTH
- STRUCTURE BELOW
- STRUCTURE ABOVE
- TRACK CENTERLINE
- PROPOSED DEMOLITION

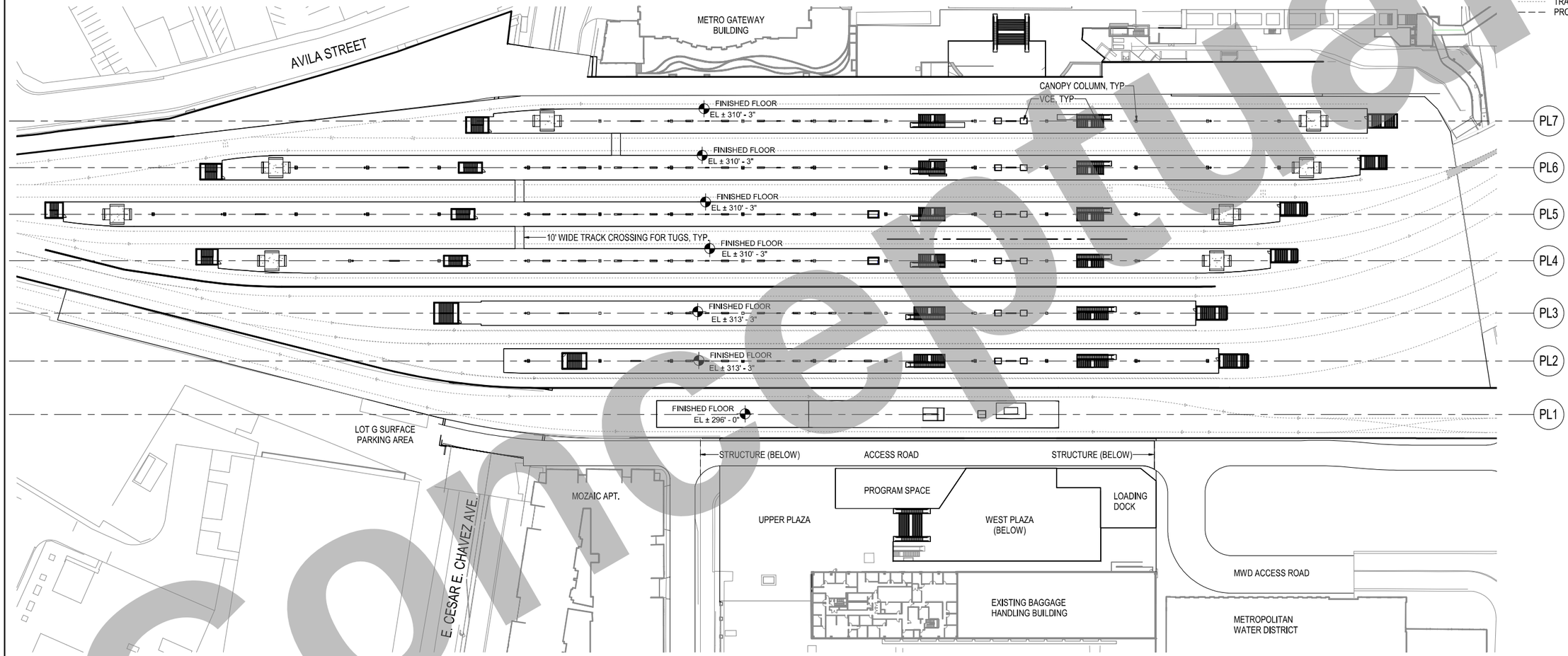

1 / A-020 OVERALL PLAN - PLATFORM LEVEL

1" = 60'-0"

0' 30' 60' 120'

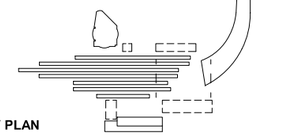

KEY PLAN

CONCEPTUAL DESIGN SUBMITTAL
NOT FOR CONSTRUCTION

Conceptual

THE PREPARATION OF THIS DRAWING HAS BEEN FINANCED IN PART THROUGH A GRANT FROM THE U.S. DEPARTMENT OF TRANSPORTATION, FEDERAL TRANSIT ADMINISTRATION (fta), UNDER THE FEDERAL TRANSIT ACT OF 1964, AS AMENDED, AND IN PART BY THE TAXES OF THE CITIZENS OF LOS ANGELES COUNTY AND OF THE STATE OF CALIFORNIA

REV	DATE	BY	APP	REG NO	EXPIRES	SEAL HOLDER	DESCRIPTION

DESIGNED BY: M. MAH
DRAWN BY: M. PERROS
CHECKED BY: M. RAMIREZ
IN CHARGE: T. KIM
DATE: 7/13/2021

Metro
LOS ANGELES COUNTY
METROPOLITAN TRANSPORTATION AUTHORITY

V&A, INC.
875 S. FAIR OAKS AVENUE
PASADENA, CA 91105
(213) 972-0700

HDR ENGINEERING
350 S GRAND AVENUE
SUITE 2900
LOS ANGELES, CA 90071
(213) 239-6800

SUBMITTED: _____ PROJECT MANAGER

APPROVED: _____

LINK UNION STATION PROJECT
ARCHITECTURAL DRAWINGS

OVERALL PLATFORM LEVEL PLAN

CONTRACT NO.

DRAWING NO. A-020 REV. 0

SCALE 1" = 60'-0"

SHEET NO. 30 of 72

GENERAL NOTES

1. FOR LEVEL DATUMS, SEE CIVIL DRAWINGS.
2. FOR DETAILS OF FIRE ACCESS ROAD, SEE CIVIL DRAWINGS.
3. FOR DETAILS OF TRACK ALIGNMENT, SEE TRACK DRAWINGS.
4. FOR DRAINAGE DETAILS, SEE DRAINAGE DRAWINGS.
5. FOR EXISTING CONDITIONS, SEE METRO RAIL PROJECT CONTRACT A135 REFERENCE DWGS.

GRAPHICS LEGEND

- EXISTING STRUCTURE
- EARTH
- STRUCTURE BELOW
- STRUCTURE ABOVE
- TRACK CENTERLINE
- PROPOSED DEMOLITION

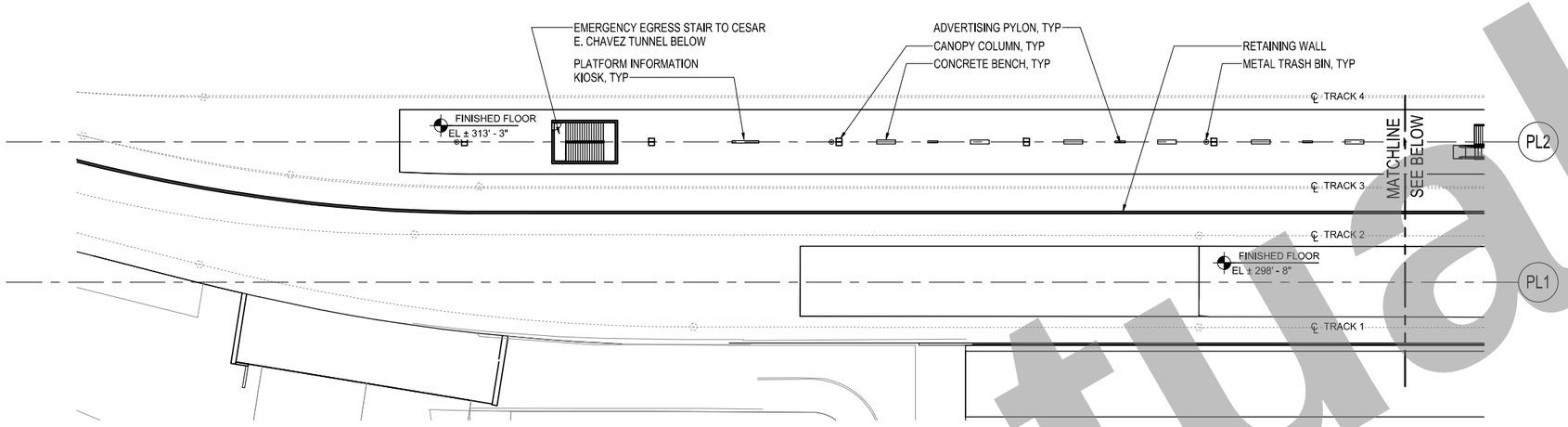

1 A-021 PLATFORM PLAN - P1 + P2 - NORTH
1" = 30'-0"
0' 15' 30' 60'

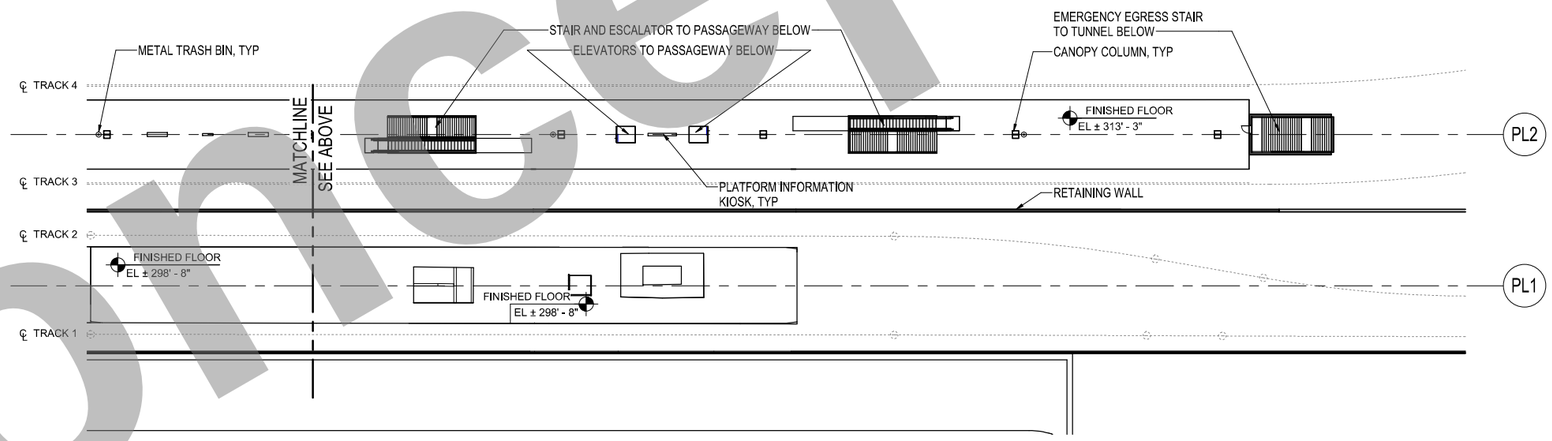

2 A-021 PLATFORM PLAN - P1 + P2 - SOUTH
1" = 30'-0"
0' 15' 30' 60'

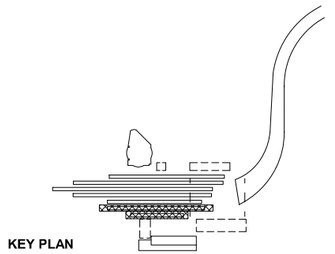

KEY PLAN

CONCEPTUAL DESIGN SUBMITTAL
NOT FOR CONSTRUCTION

Conceptual

THE PREPARATION OF THIS DRAWING HAS BEEN FINANCED IN PART THROUGH A GRANT FROM THE U.S. DEPARTMENT OF TRANSPORTATION, FEDERAL TRANSIT ADMINISTRATION (fta), UNDER THE FEDERAL TRANSIT ACT OF 1964, AS AMENDED, AND IN PART BY THE TAXES OF THE CITIZENS OF LOS ANGELES COUNTY AND OF THE STATE OF CALIFORNIA

REV	DATE	BY	APP	REG NO	EXPIRES	SEAL HOLDER	DESCRIPTION

DESIGNED BY	M. MAH
DRAWN BY	M. PERROS
CHECKED BY	M. RAMIREZ
IN CHARGE	T. KIM
DATE	7/13/2021

Metro
LOS ANGELES COUNTY METROPOLITAN TRANSPORTATION AUTHORITY

V&A, INC.
875 S. FAIR OAKS AVENUE
PASADENA, CA 91105
(213) 972-8700

HDR ENGINEERING
350 S GRAND AVENUE
SUITE 2900
LOS ANGELES, CA 90071
(213) 228-8800

SUBMITTED: _____ PROJECT MANAGER

APPROVED: _____

LINK UNION STATION PROJECT
ARCHITECTURAL DRAWINGS

PLATFORM PLAN

CONTRACT NO.	
DRAWING NO.	A-021
REV.	0
SCALE	1" = 30'-0"
SHEET NO.	31 of 72

GENERAL NOTES

1. FOR LEVEL DATUMS, SEE CIVIL DRAWINGS.
2. FOR DETAILS OF FIRE ACCESS ROAD, SEE CIVIL DRAWINGS.
3. FOR DETAILS OF TRACK ALIGNMENT, SEE TRACK DRAWINGS.
4. FOR DRAINAGE DETAILS, SEE DRAINAGE DRAWINGS.
5. FOR EXISTING CONDITIONS, SEE METRO RAIL PROJECT CONTRACT A135 REFERENCE DWGS.

GRAPHICS LEGEND

- EXISTING STRUCTURE
- EARTH
- STRUCTURE BELOW
- STRUCTURE ABOVE
- TRACK CENTERLINE
- PROPOSED DEMOLITION

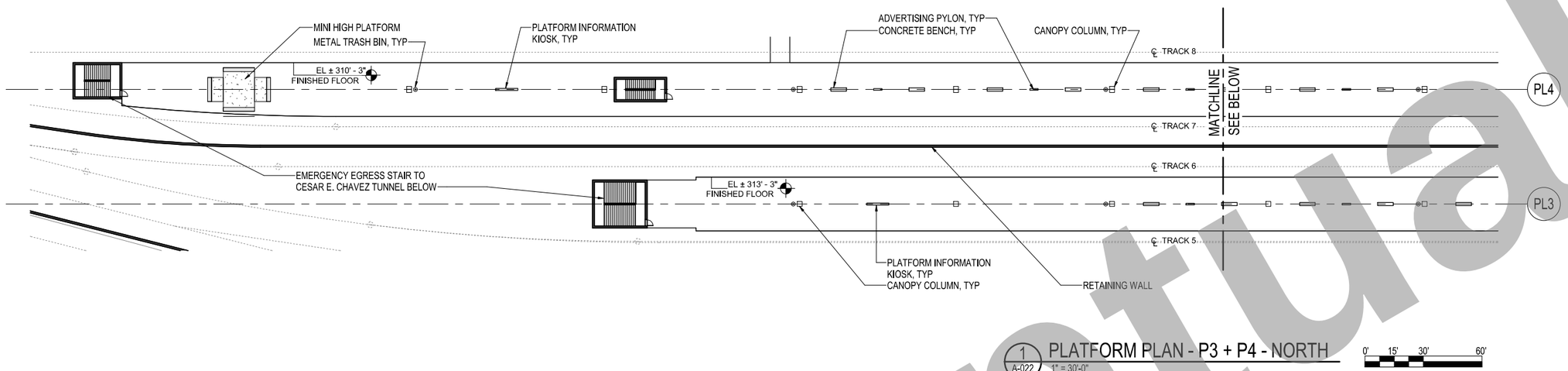

1 A-022 PLATFORM PLAN - P3 + P4 - NORTH
1" = 30'-0"

0' 15' 30' 60'

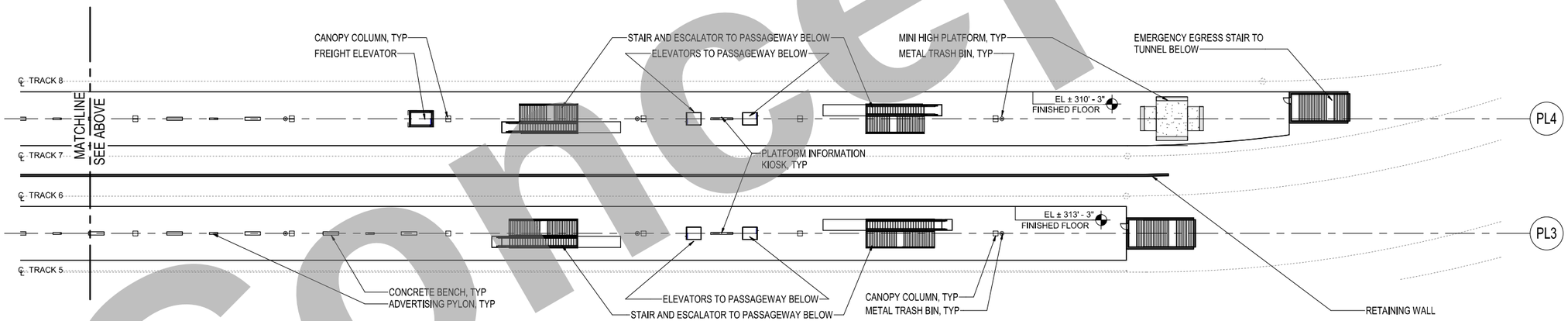

2 A-022 PLATFORM PLAN - P3 + P4 - SOUTH
1" = 30'-0"

0' 15' 30' 60'

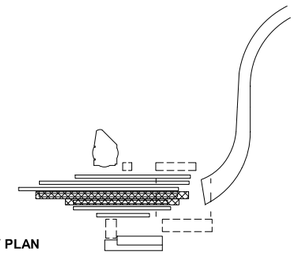

KEY PLAN

CONCEPTUAL DESIGN SUBMITTAL
NOT FOR CONSTRUCTION

Conceptual

THE PREPARATION OF THIS DRAWING HAS BEEN FINANCED IN PART THROUGH A GRANT FROM THE U.S. DEPARTMENT OF TRANSPORTATION, FEDERAL TRANSIT ADMINISTRATION (fta), UNDER THE FEDERAL TRANSIT ACT OF 1964, AS AMENDED, AND IN PART BY THE TAXES OF THE CITIZENS OF LOS ANGELES COUNTY AND OF THE STATE OF CALIFORNIA

REV	DATE	BY	APP	REG NO	EXPIRES	SEAL HOLDER	DESCRIPTION

DESIGNED BY: M. MAH
DRAWN BY: M. PERROS
CHECKED BY: M. RAMIREZ
IN CHARGE: T. KIM
DATE: 7/13/2021

Metro
LOS ANGELES COUNTY
METROPOLITAN TRANSPORTATION AUTHORITY

V&A, INC.
975 S. FAIR OAKS AVENUE
PASADENA, CA 91105
(213) 972-8700

HDR ENGINEERING
350 S GRAND AVENUE
SUITE 2900
LOS ANGELES, CA 90071
(213) 228-6800

SUBMITTED: _____ PROJECT MANAGER
APPROVED: _____

LINK UNION STATION PROJECT
ARCHITECTURAL DRAWINGS

PLATFORM PLAN

CONTRACT NO.
DRAWING NO. A-022 REV. 0
SCALE 1" = 30'-0"
SHEET NO. 32 of 72

GENERAL NOTES

1. FOR LEVEL DATUMS, SEE CIVIL DRAWINGS.
2. FOR DETAILS OF FIRE ACCESS ROAD, SEE CIVIL DRAWINGS.
3. FOR DETAILS OF TRACK ALIGNMENT, SEE TRACK DRAWINGS.
4. FOR DRAINAGE DETAILS, SEE DRAINAGE DRAWINGS.
5. FOR EXISTING CONDITIONS, SEE METRO RAIL PROJECT CONTRACT A135 REFERENCE DWGS.

GRAPHICS LEGEND

- EXISTING STRUCTURE
- EARTH
- STRUCTURE BELOW
- STRUCTURE ABOVE
- TRACK CENTERLINE
- PROPOSED DEMOLITION

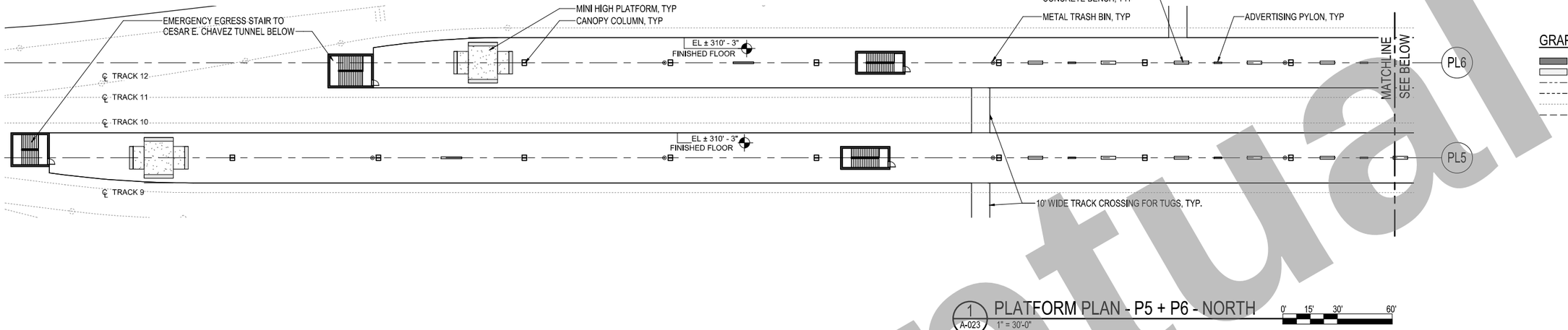

1 A-023 PLATFORM PLAN - P5 + P6 - NORTH
1" = 30'-0"
0' 15' 30' 60'

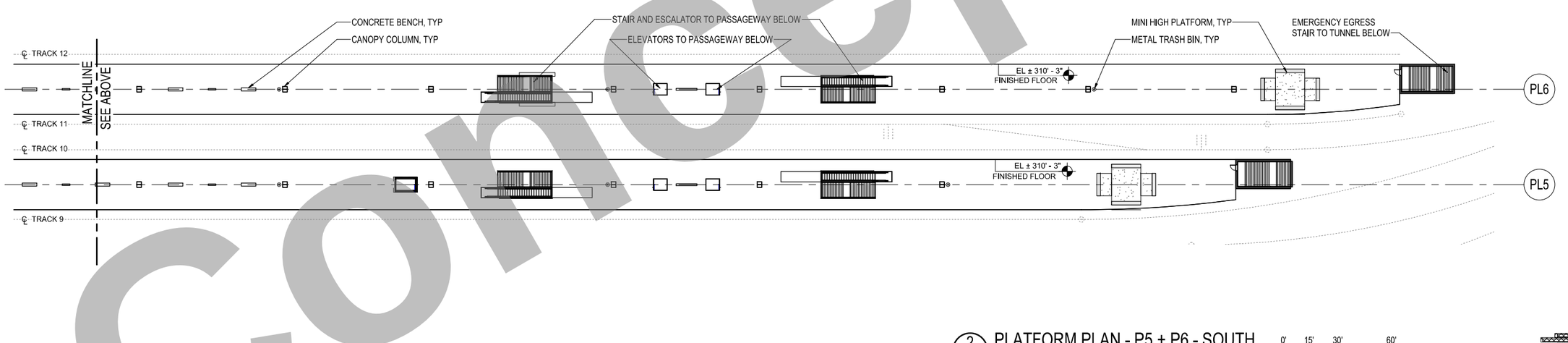

2 A-023 PLATFORM PLAN - P5 + P6 - SOUTH
1" = 30'-0"
0' 15' 30' 60'

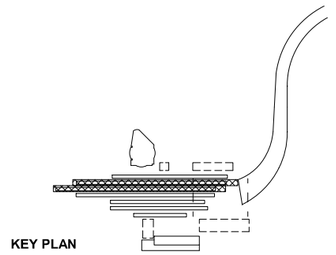

KEY PLAN

CONCEPTUAL DESIGN SUBMITTAL
NOT FOR CONSTRUCTION

Conceptual

THE PREPARATION OF THIS DRAWING HAS BEEN FINANCED IN PART THROUGH A GRANT FROM THE U.S. DEPARTMENT OF TRANSPORTATION, FEDERAL TRANSIT ADMINISTRATION (fta), UNDER THE FEDERAL TRANSIT ACT OF 1964, AS AMENDED, AND IN PART BY THE TAXES OF THE CITIZENS OF LOS ANGELES COUNTY AND OF THE STATE OF CALIFORNIA

REV	DATE	BY	APP	REG NO	EXPIRES	SEAL HOLDER	DESCRIPTION

DESIGNED BY: M. MAH
DRAWN BY: M. PERROS
CHECKED BY: M. RAMIREZ
IN CHARGE: T. KIM
DATE: 7/13/2021

Metro
LOS ANGELES COUNTY
METROPOLITAN TRANSPORTATION AUTHORITY

V&A, INC.
975 S. FAIR OAKS AVENUE
PASADENA, CA 91105
(213) 972-8700

HDR ENGINEERING
350 S GRAND AVENUE
SUITE 2900
LOS ANGELES, CA 90071
(213) 228-6800

SUBMITTED: _____ PROJECT MANAGER
APPROVED: _____

LINK UNION STATION PROJECT
ARCHITECTURAL DRAWINGS

PLATFORM PLAN

CONTRACT NO.
DRAWING NO. A-023
REV. 0
SCALE 1" = 30'-0"
SHEET NO. 33 of 72

GENERAL NOTES

1. FOR LEVEL DATUMS, SEE CIVIL DRAWINGS.
2. FOR DETAILS OF FIRE ACCESS ROAD, SEE CIVIL DRAWINGS.
3. FOR DETAILS OF TRACK ALIGNMENT, SEE TRACK DRAWINGS.
4. FOR DRAINAGE DETAILS, SEE DRAINAGE DRAWINGS.
5. FOR EXISTING CONDITIONS, SEE METRO RAIL PROJECT CONTRACT A135 REFERENCE DWGS.

GRAPHICS LEGEND

- EXISTING STRUCTURE
- EARTH
- STRUCTURE BELOW
- STRUCTURE ABOVE
- TRACK CENTERLINE
- PROPOSED DEMOLITION

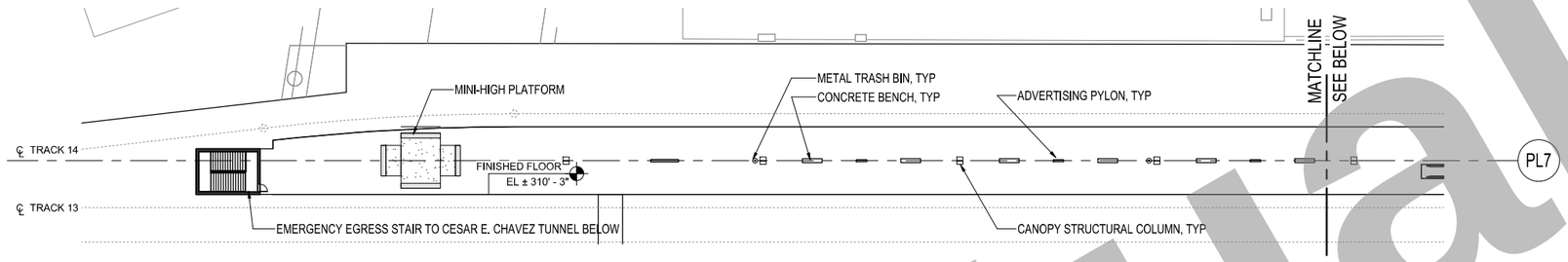

1 A-024 PLATFORM PLAN - P7 - NORTH
1" = 30'-0"

0' 15' 30' 60'

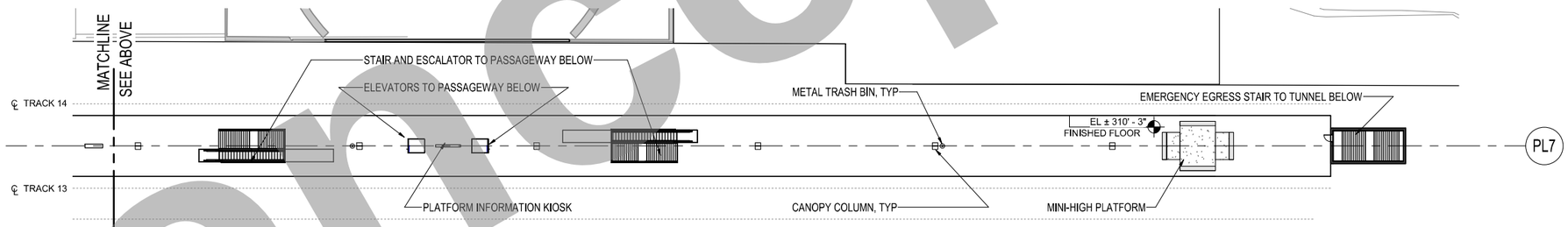

2 A-024 PLATFORM PLAN - P7 - SOUTH
1" = 30'-0"

0' 15' 30' 60'

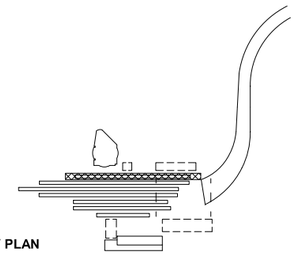

KEY PLAN

CONCEPTUAL DESIGN SUBMITTAL
NOT FOR CONSTRUCTION

Conceptual

THE PREPARATION OF THIS DRAWING HAS BEEN FINANCED IN PART THROUGH A GRANT FROM THE U.S. DEPARTMENT OF TRANSPORTATION, FEDERAL TRANSIT ADMINISTRATION (fta), UNDER THE FEDERAL TRANSIT ACT OF 1964, AS AMENDED, AND IN PART BY THE TAXES OF THE CITIZENS OF LOS ANGELES COUNTY AND OF THE STATE OF CALIFORNIA

REV	DATE	BY	APP	REG NO	EXPIRES	SEAL HOLDER	DESCRIPTION

DESIGNED BY: M. MAH
DRAWN BY: M. PERROS
CHECKED BY: M. RAMIREZ
IN CHARGE: T. KIM
DATE: 7/13/2021

Metro
LOS ANGELES COUNTY
METROPOLITAN TRANSPORTATION AUTHORITY

V&A, INC.
975 S. FAIR OAKS AVENUE
PASADENA, CA 91105
(213) 972-8700

HDR ENGINEERING
350 S GRAND AVENUE
SUITE 2900
LOS ANGELES, CA 90071
(213) 228-8600

SUBMITTED: _____ PROJECT MANAGER
APPROVED: _____

LINK UNION STATION PROJECT
ARCHITECTURAL DRAWINGS

PLATFORM PLAN

CONTRACT NO.
DRAWING NO. A-024
REV. 0
SCALE 1" = 30'-0"
SHEET NO. 34 of 72

GENERAL NOTES

1. FOR LEVEL DATUMS, SEE CIVIL DRAWINGS.
2. FOR DETAILS OF FIRE ACCESS ROAD, SEE CIVIL DRAWINGS.
3. FOR DETAILS OF TRACK ALIGNMENT, SEE TRACK DRAWINGS.
4. FOR DRAINAGE DETAILS, SEE DRAINAGE DRAWINGS.
5. FOR EXISTING CONDITIONS, SEE METRO RAIL PROJECT CONTRACT A135 REFERENCE DWGS.

GRAPHICS LEGEND

- EXISTING STRUCTURE
- EARTH
- STRUCTURE BELOW
- STRUCTURE ABOVE
- TRACK CENTERLINE
- PROPOSED DEMOLITION

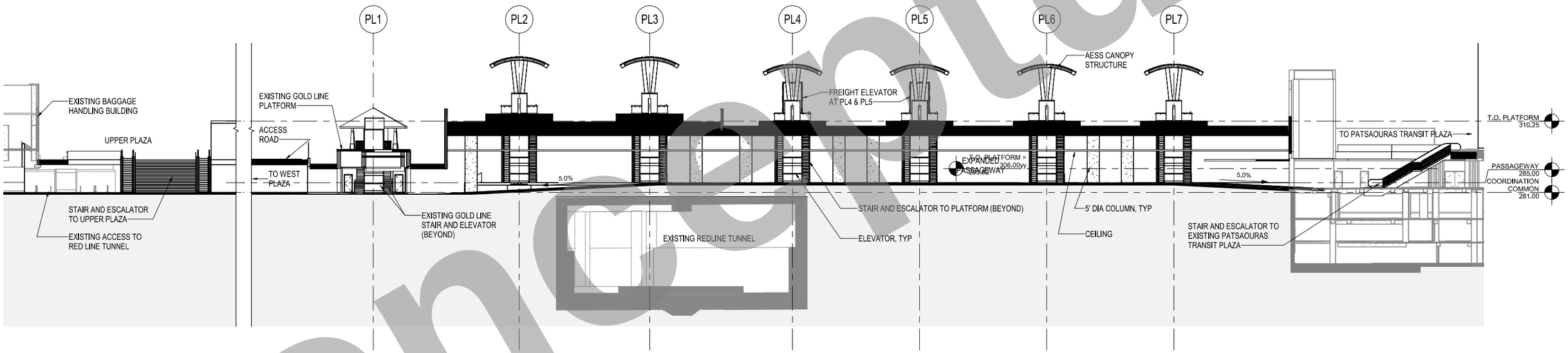

1 / A-300 OVERALL SITE SECTION
1" = 20'-0"

0' 10' 20' 40'

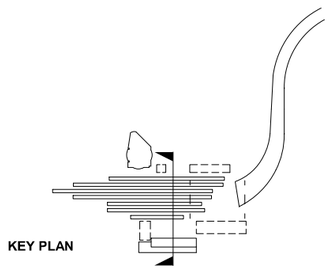

CONCEPTUAL DESIGN SUBMITTAL
NOT FOR CONSTRUCTION

Conceptual

THE PREPARATION OF THIS DRAWING HAS BEEN FINANCED IN PART THROUGH A GRANT FROM THE U.S. DEPARTMENT OF TRANSPORTATION, FEDERAL TRANSIT ADMINISTRATION (fta), UNDER THE FEDERAL TRANSIT ACT OF 1964, AS AMENDED, AND IN PART BY THE TAXES OF THE CITIZENS OF LOS ANGELES COUNTY AND OF THE STATE OF CALIFORNIA

REV	DATE	BY	APP	REG NO	EXPIRES	SEAL HOLDER	DESCRIPTION

DESIGNED BY: M. MAH
DRAWN BY: M. PERROS
CHECKED BY: M. RAMIREZ
IN CHARGE: T. KIM
DATE: 7/13/2021

Metro
LOS ANGELES COUNTY
METROPOLITAN TRANSPORTATION AUTHORITY

V&A, INC.
975 S. FAIR OAKS AVENUE
PASADENA, CA 91105
(213) 972-8700

HDR ENGINEERING
350 S GRAND AVENUE
SUITE 2900
LOS ANGELES, CA 90071
(213) 239-6800

SUBMITTED: _____ PROJECT MANAGER

APPROVED: _____

LINK UNION STATION PROJECT
ARCHITECTURAL DRAWINGS

OVERALL SITE SECTIONS

CONTRACT NO.

DRAWING NO. A-300 | REV. 0

SCALE 1" = 20'-0"

SHEET NO. 35 of 72

GENERAL NOTES

1. FOR LEVEL DATUMS, SEE CIVIL DRAWINGS.
2. FOR DETAILS OF FIRE ACCESS ROAD, SEE CIVIL DRAWINGS.
3. FOR DETAILS OF TRACK ALIGNMENT, SEE TRACK DRAWINGS.
4. FOR DRAINAGE DETAILS, SEE DRAINAGE DRAWINGS.
5. FOR EXISTING CONDITIONS, SEE METRO RAIL PROJECT CONTRACT A135 REFERENCE DWGS.

GRAPHICS LEGEND

- EXISTING STRUCTURE
- EARTH
- STRUCTURE BELOW
- STRUCTURE ABOVE
- TRACK CENTERLINE
- PROPOSED DEMOLITION

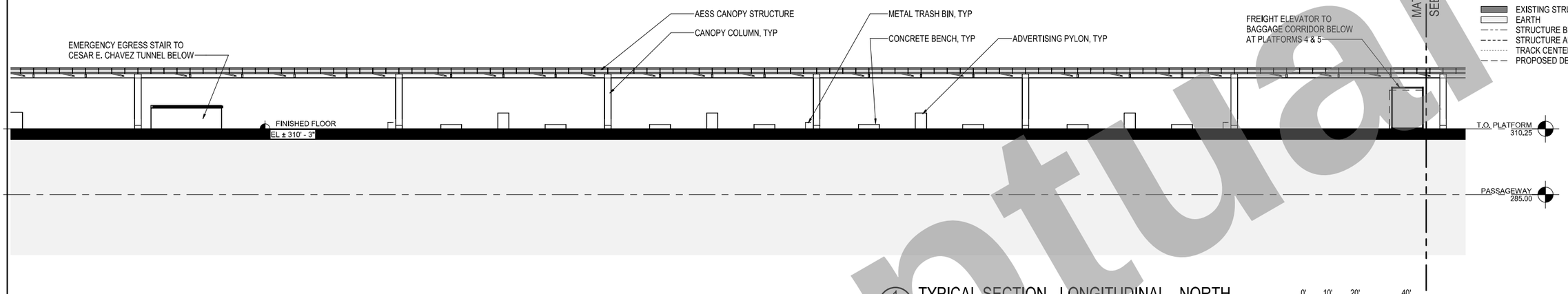

1 A-310 TYPICAL SECTION - LONGITUDINAL - NORTH
1" = 20'-0"

0' 10' 20' 40'

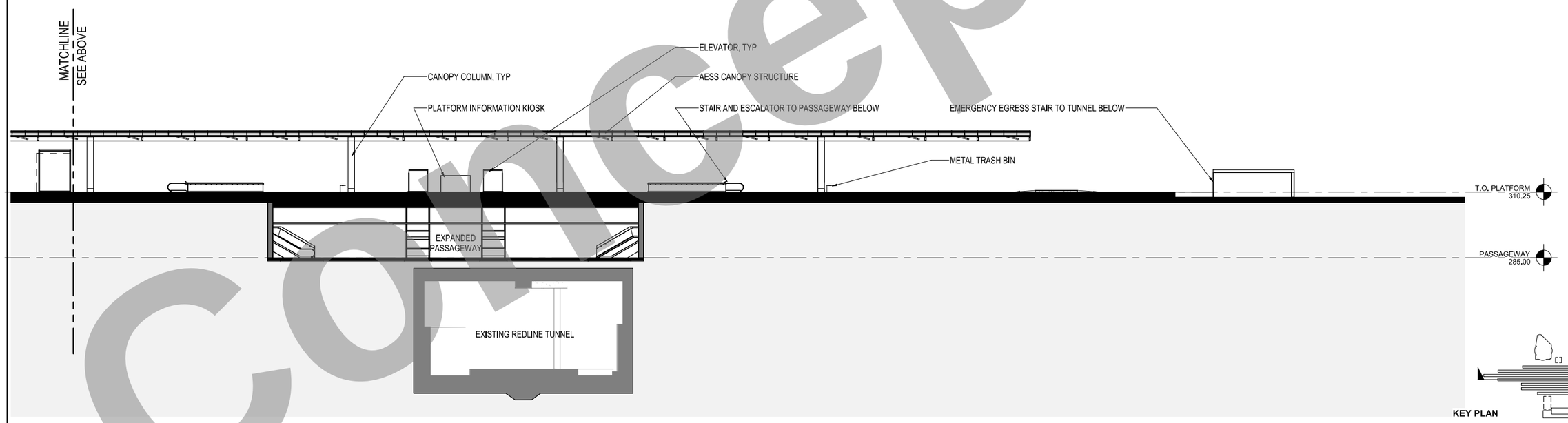

2 A-310 TYPICAL SECTION - LONGITUDINAL - SOUTH
1" = 20'-0"

0' 10' 20' 40'

KEY PLAN

CONCEPTUAL DESIGN SUBMITTAL
NOT FOR CONSTRUCTION

Conceptual

THE PREPARATION OF THIS DRAWING HAS BEEN FINANCED IN PART THROUGH A GRANT FROM THE U.S. DEPARTMENT OF TRANSPORTATION, FEDERAL TRANSIT ADMINISTRATION (fta), UNDER THE FEDERAL TRANSIT ACT OF 1964, AS AMENDED, AND IN PART BY THE TAXES OF THE CITIZENS OF LOS ANGELES COUNTY AND OF THE STATE OF CALIFORNIA

REV	DATE	BY	APP	REG NO	EXPIRES	SEAL HOLDER	DESCRIPTION

DESIGNED BY: M. MAH
DRAWN BY: M. PERROS
CHECKED BY: M. RAMIREZ
IN CHARGE: T. KIM
DATE: 7/13/2021

Metro
LOS ANGELES COUNTY
METROPOLITAN TRANSPORTATION AUTHORITY

V&A, INC.
975 S. FAIR OAKS AVENUE
PASADENA, CA 91105
(213) 972-0700

HDR ENGINEERING
350 S GRAND AVENUE
SUITE 2900
LOS ANGELES, CA 90071
(213) 228-6800

SUBMITTED: _____ PROJECT MANAGER
APPROVED: _____

LINK UNION STATION PROJECT
ARCHITECTURAL DRAWINGS

TYPICAL PLATFORM SECTIONS

CONTRACT NO.
DRAWING NO. A-310 REV. 0
SCALE 1" = 20'-0"
SHEET NO. 36 of 72

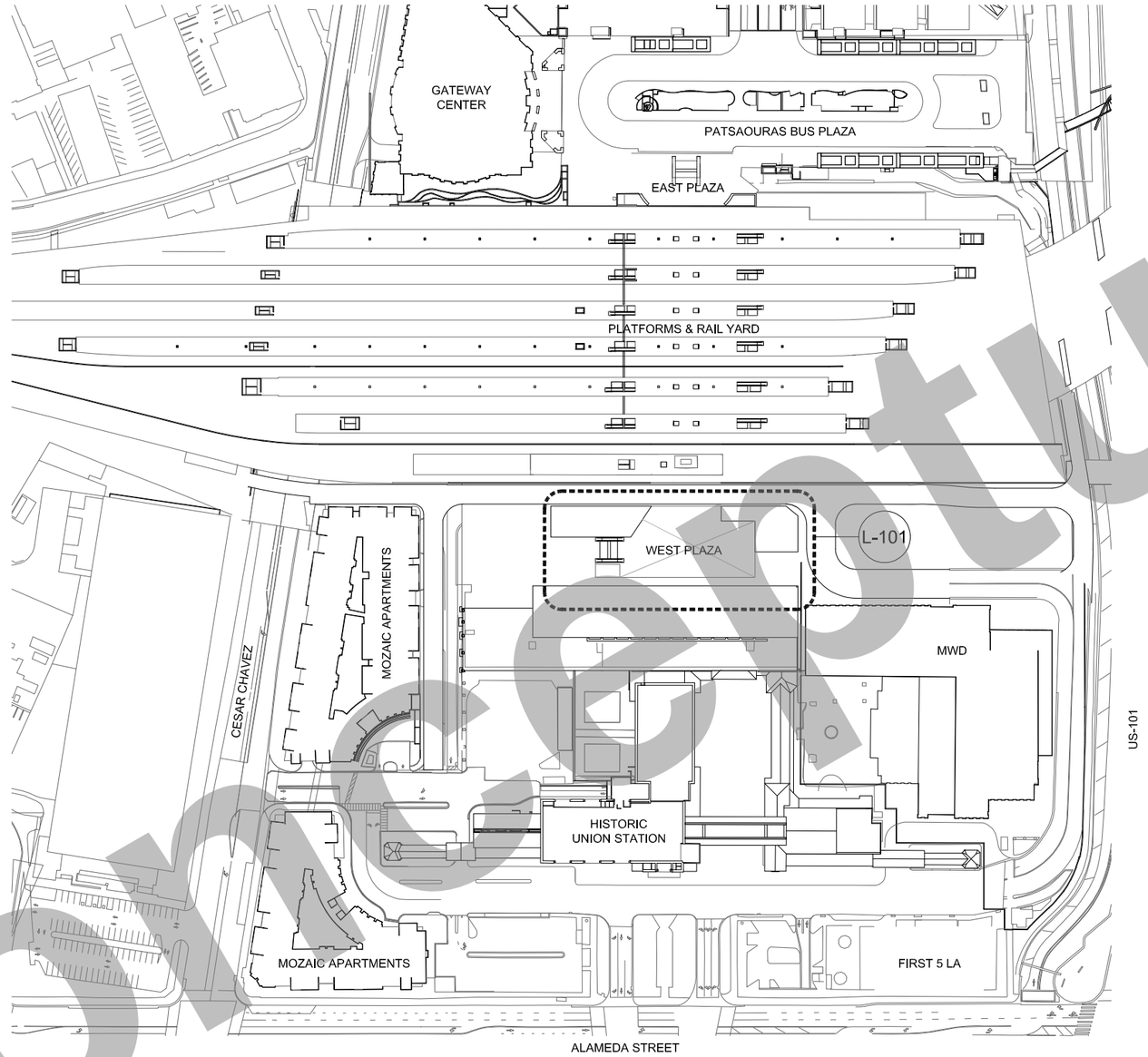

SCHEMATIC PLANT PALETTE

	NAME	COMMON NAME	WUCOLS	NOTES
PALMS				
	PHOENIX DACTYLIFERA	DATE PALM	LOW	
	WASHINGTONIA ROBUSTA	MEXICAN FAN PALM	LOW	
CANOPY TREES				
	CERCIS CANADENSIS	EASTERN REDBUD	LOW	
	OLEA EUROPAEA WILSONII	FRUITLESS OLIVE	LOW	NON-FRUITING
	PRUNUS CERASIFERA	PURPLE LEAF PLUM	MODERATE	NON-FRUITING
	PARKINSONIA 'DESERT MUSEUM'	MUSEUM PALO VERDE	VERY LOW	
UNDERSTORY				
	ANIGOZANTHOS SPP.	KANGAROO PAW	MODERATE	
	CISTUS SPP.	ROCKROSE	LOW	
	DYMONDIA MARGARETAE	DYMONDIA	LOW	
	PHORMIUM TENAX SPP.	NEW ZEALAND FLAX	LOW	
	ROSMARINUS SPP.	ROSEMARY	LOW	

CONCEPTUAL DESIGN NOTES

1. ALL PEDESTRIAN AREAS TO MEET FEDERAL ADA AND LOCAL ACCESSIBILITY CODES
2. TREES SHOWN IN HARDSCAPE TO INCLUDE GRATES (NOT SHOWN)
3. PLANT PALETTE BASED UPON EXISTING LA UNION STATION LANDSCAPE, WITH ADDITIONAL NATIVE/ADAPTIVE, LOW-WATER-USE SPECIES
4. SITE LIGHTING LEVELS TO MEET MINIMUM LOCAL SAFETY CRITERIA
5. PLAZA PUBLIC ART TBD
6. FINAL PLANT SPECIES SELECTIONS TO BE NON-FRUITING AND HAVE MINIMAL LEAF LITTER
7. ALL PLANTING AREAS ARE TO BE IRRIGATED WITH A PERMANENT IRRIGATION SYSTEM WITH EFFICIENT DELIVERY AND WEATHER-BASED CONTROL, AND SHALL USE RECYCLED WATER IF AVAILABLE/WHERE POSSIBLE
8. FINAL PLANTING AND IRRIGATION DESIGN MUST MEET STATE OF CALIFORNIA WATER USE ORDINANCE
9. TREE CANOPIES TO BE TRIMMED CLEAR OF BRANCHES/OBSTRUCTIONS FROM 6' ABOVE GRADE TO FINISH SURFACE, TO FACILITATE NATURAL SURVEILLANCE

N

100 0 100 200

1"=100'

CONCEPTUAL DESIGN SUBMITTAL
NOT FOR CONSTRUCTION

THE PREPARATION OF THIS DRAWING HAS BEEN FINANCED IN PART THROUGH A GRANT FROM THE U.S. DEPARTMENT OF TRANSPORTATION, FEDERAL TRANSIT ADMINISTRATION (FTA), UNDER THE FEDERAL TRANSIT ACT OF 1964, AS AMENDED, AND IN PART BY THE TAXES OF THE CITIZENS OF LOS ANGELES COUNTY AND OF THE STATE OF CALIFORNIA.

REV	DATE	BY	APP	REG NO	EXPIRES	SEAL HOLDER	DESCRIPTION

DESIGNED BY A. COTTINI
DRAWN BY D. LIANG
CHECKED BY A. COTTINI
IN CHARGE T. KIM
DATE 7/13/2021

Metro
LOS ANGELES COUNTY
METROPOLITAN TRANSPORTATION AUTHORITY

HDR ENGINEERING
350 S. GRAND AVENUE
SUITE 2500
LOS ANGELES, CA 90071
(213) 235-5800

SUBMITTED: _____ PROJECT MANAGER

APPROVED: _____

LINK UNION STATION PROJECT

LANDSCAPE NOTES & MATERIALS

CONTRACT NO
DRAWING NO L-001 REV
SCALE 1" = 100'
SHEET NO 37 of 72

conceptual

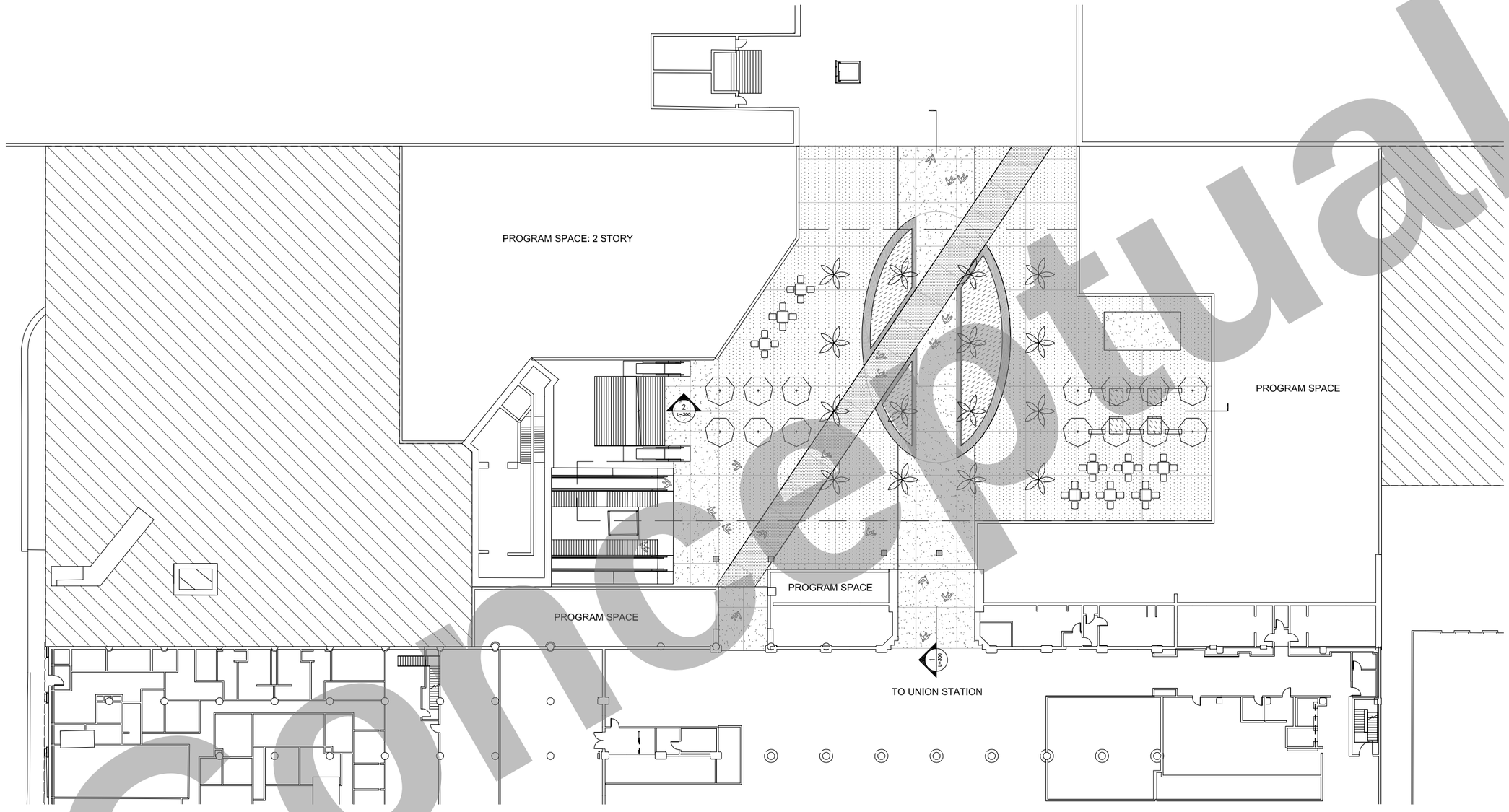

LANDSCAPE MATERIALS KEY

HARDSCAPE & FURNISHINGS

- CONCRETE FINISH 1
- CONCRETE FINISH 2
- CONCRETE FINISH 3
- BENCH
- CAFE TABLE & CHAIRS
- CAST IN PLACE CONCRETE SEATWALL

LANDSCAPE

- CANOPY TREE
- PALM TREE
- UNDERSTORY PLANTING
- INTERIM PLANTING AREAS (TOD SITES)

20 0 20 40

1"=20'

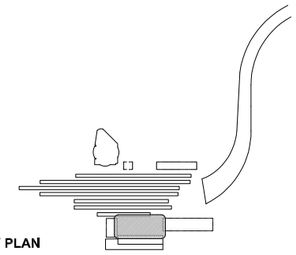

KEY PLAN

CONCEPTUAL DESIGN SUBMITTAL
NOT FOR CONSTRUCTION

Conceptual

THE PREPARATION OF THIS DRAWING HAS BEEN FINANCED IN PART THROUGH A GRANT FROM THE U.S. DEPARTMENT OF TRANSPORTATION, FEDERAL TRANSIT ADMINISTRATION (FTA), UNDER THE FEDERAL TRANSIT ACT OF 1964, AS AMENDED, AND IN PART BY THE TAXES OF THE CITIZENS OF LOS ANGELES COUNTY AND OF THE STATE OF CALIFORNIA.

REV	DATE	BY	APP	REG NO	EXPIRES	SEAL HOLDER	DESCRIPTION

DESIGNED BY A. COTTINI
DRAWN BY D. LIANG
CHECKED BY A. COTTINI
IN CHARGE T. KIM
DATE 7/13/2021

Metro

LOS ANGELES COUNTY
METROPOLITAN TRANSPORTATION AUTHORITY

HDR ENGINEERING
350 S. GRAND AVENUE
SUITE 3000
LOS ANGELES, CA 90071
(213) 230-3800

SUBMITTED: _____ PROJECT MANAGER

APPROVED: _____

LINK UNION STATION PROJECT

WEST PLAZA SITE PLAN

CONTRACT NO

DRAWING NO L-101 REV

SCALE 1" = 20'

SHEET NO 38 of 72

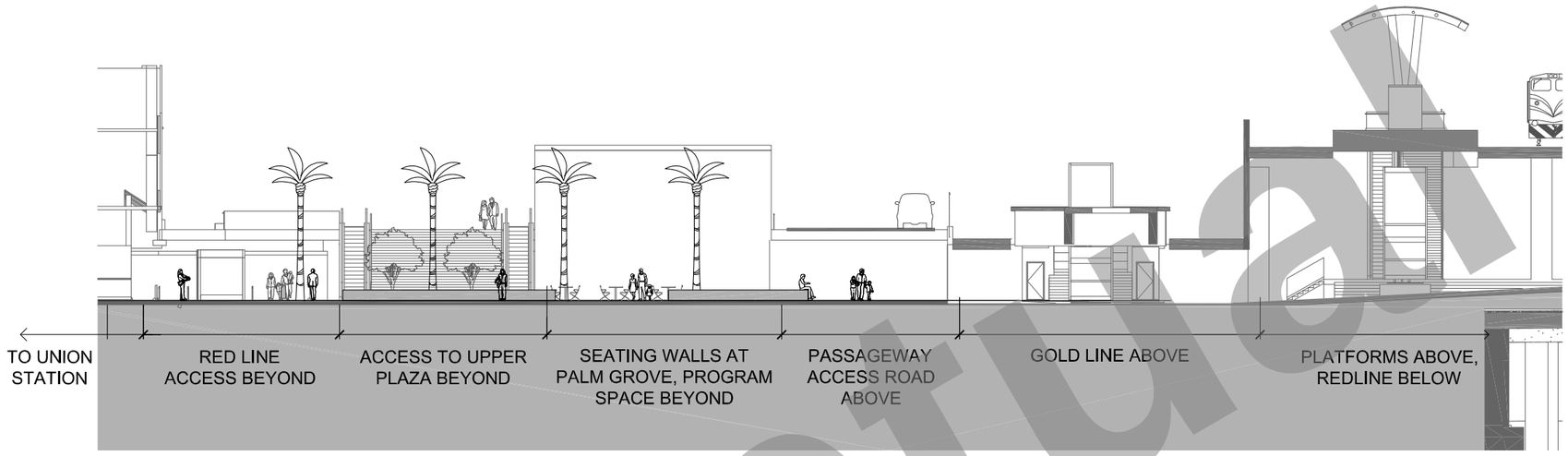

1 WEST PLAZA - SECTION WEST TO EAST, LOOKING NORTH
1" = 20'-0"

2 WEST PLAZA - SECTION NORTH TO SOUTH, LOOKING EAST
1" = 20'-0"

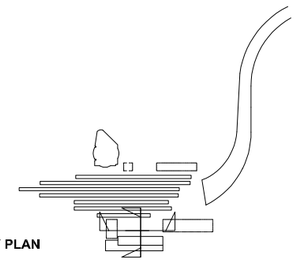

CONCEPTUAL DESIGN SUBMITTAL
NOT FOR CONSTRUCTION

Conceptual

THE PREPARATION OF THIS DRAWING HAS BEEN FINANCED IN PART THROUGH A GRANT FROM THE U.S. DEPARTMENT OF TRANSPORTATION, FEDERAL TRANSIT ADMINISTRATION (FTA), UNDER THE FEDERAL TRANSIT ACT OF 1964, AS AMENDED, AND IN PART BY THE TAXES OF THE CITIZENS OF LOS ANGELES COUNTY AND OF THE STATE OF CALIFORNIA.

REV	DATE	BY	APP	REG NO	EXPIRES	SEAL HOLDER	DESCRIPTION

DESIGNED BY A. COTTINI
DRAWN BY D. LIANG
CHECKED BY A. COTTINI
IN CHARGE T. KIM
DATE 7/13/2021

Metro
LOS ANGELES COUNTY
METROPOLITAN TRANSPORTATION AUTHORITY

HDR ENGINEERING
350 S. GRAND AVENUE
SUITE 2000
LOS ANGELES, CA 90071
(213) 236-5800

SUBMITTED: _____ PROJECT MANAGER
APPROVED: _____

LINK UNION STATION PROJECT

PLAZA SITE SECTIONS

CONTRACT NO
DRAWING NO L-300 REV
SCALE 1" = 20'
SHEET NO 39 of 72

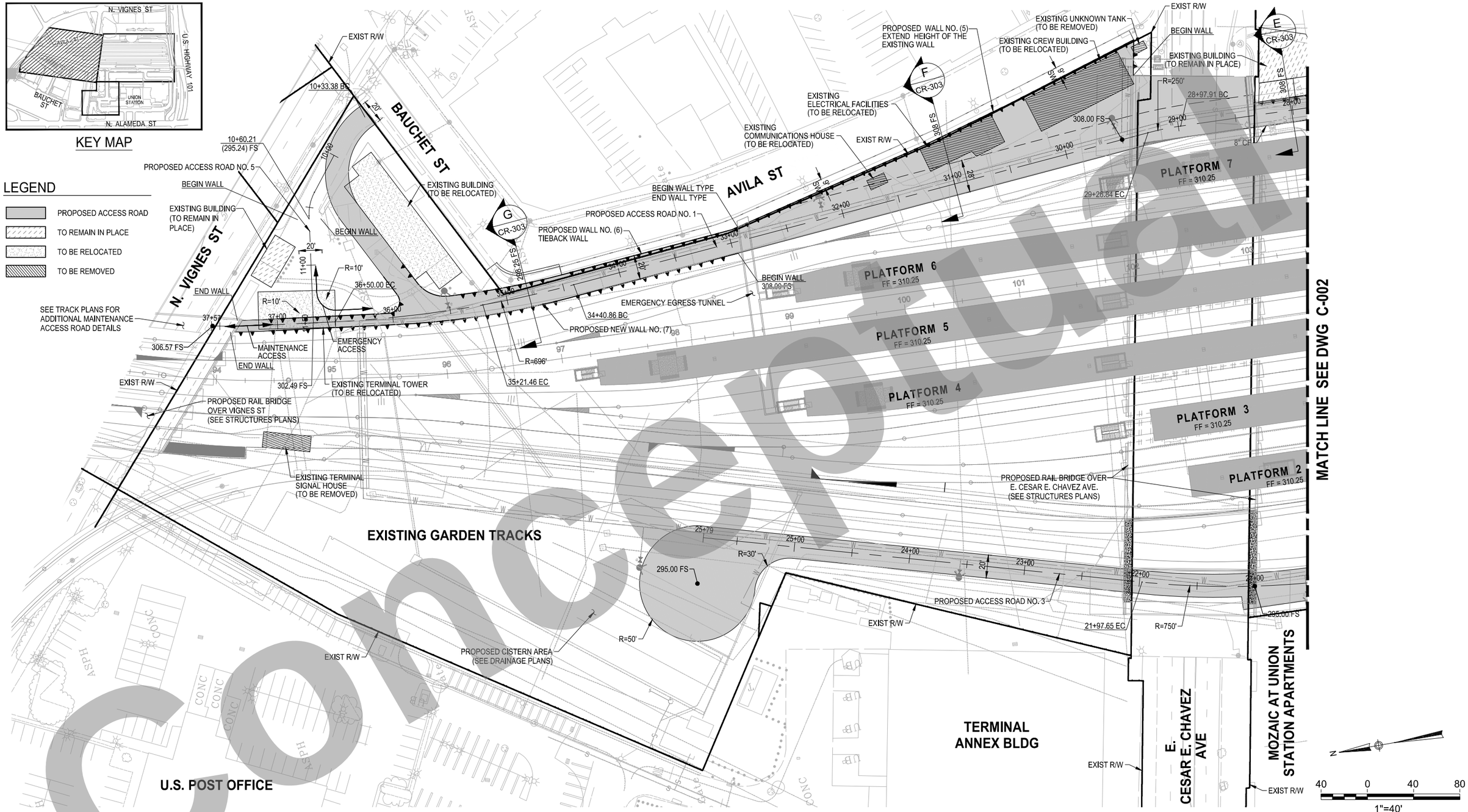

CONCEPTUAL DESIGN SUBMITTAL
NOT FOR CONSTRUCTION

Conceptual

THE PREPARATION OF THIS DRAWING HAS BEEN FINANCED IN PART THROUGH A GRANT FROM THE U.S. DEPARTMENT OF TRANSPORTATION, FEDERAL TRANSIT ADMINISTRATION (FTA), UNDER THE FEDERAL TRANSIT ACT OF 1964, AS AMENDED, AND IN PART BY THE TAXES OF THE CITIZENS OF LOS ANGELES COUNTY AND OF THE STATE OF CALIFORNIA.

REV	DATE	BY	APP	REG NO	EXPIRES	SEAL HOLDER	DESCRIPTION

DESIGNED BY J. RIMORIN
DRAWN BY R. VENEGAS
CHECKED BY J. RIMORIN
IN CHARGE N. BUSCH
DATE 7/13/2021

Metro
LOS ANGELES COUNTY METROPOLITAN TRANSPORTATION AUTHORITY

V&A INC.
975 S. FAIR OAKS AVE.
PASADENA, CA 91105
213.972.9700

HDR ENGINEERING
350 S. GRAND AVENUE
SUITE 2900
LOS ANGELES, CA 90071
(213) 239-5800

SUBMITTED: _____ PROJECT MANAGER
APPROVED: _____

LINK UNION STATION PROJECT
ONSITE
CIVIL PLAN
PHASE B

CONTRACT NO
DRAWING NO C-001
REV
SCALE 1" = 40'
SHEET NO 40 of 72

Plot Driver=$PLTDRVS$ Pentable=$PENTBLS$ $USER$ $TIME$ $DATE$ $FILE$

L.A. COUNTY METROPOLITAN TRANSPORTATION AUTHORITY

EAST PORTAL BUILDING

D CR-303

C CR-302

B CR-302

A CR-301

STA 20+00 TO STA 18+75 PAVEMENT AND CURB/GUTTER RECONSTRUCTION

PROPOSED WALL NO. (3)

PROPOSED WALL NO. (4) RETAINING WALL

PROPOSED WALL NO. (3) RETAINING WALL

SHARED TENANT SHELTER (TO BE REMOVED)

PROPOSED ACCESS ROAD NO. 1

EXIST ACCESS ROAD NO. 1A

END WALL

TOP OF RAMP

PROPOSED WALL NO. (2)

EMERGENCY EGRESS TUNNEL

PLATFORM 7
FF = 310.25

PLATFORM 6
FF = 310.25

PLATFORM 5
FF = 310.25

PLATFORM 4
FF = 310.25

PLATFORM 3
FF = 313.25

PLATFORM 2
FF = 313.25

NEW GOLDLINE PLATFORM 1
FF = 295

BUILDING LIMITS BELOW

"ACCESS ROAD LIMITS TO BE COORDINATED AS PART OF PRELIMINARY DESIGN SUBMITTAL"

WEST PLAZA

MOZAIC AT UNION STATION APARTMENTS

LOADING DOCK

BAGGAGE HANDLING BUILDING

METROPOLITAN WATER DISTRICT

EXISTING RETAINING WALL (PROTECT IN PLACE)

EXISTING RETAINING WALL (REMOVE AND RECONSTRUCT)

PROPOSED CISTERNS (SEE DRAINAGE PLANS)

US 101 VIADUCT STRUCTURE NORTH ABUTMENT (SEE STRUCTURE PLANS)

EL MONTE BUSWAY

U.S. HIGHWAY 101

MATCH LINE SEE DWG C-001

MATCH LINE SEE DWG C-003

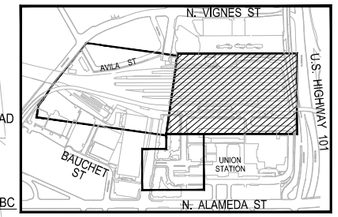

KEY MAP

LEGEND

- PROPOSED ACCESS ROAD
- TO REMAIN IN PLACE
- TO BE REMOVED

40 0 40 80
1"=40'

CONCEPTUAL DESIGN SUBMITTAL
NOT FOR CONSTRUCTION

Concept

THE PREPARATION OF THIS DRAWING HAS BEEN FINANCED IN PART THROUGH A GRANT FROM THE U.S. DEPARTMENT OF TRANSPORTATION, FEDERAL TRANSIT ADMINISTRATION (FTA), UNDER THE FEDERAL TRANSIT ACT OF 1964, AS AMENDED, AND IN PART BY THE TAXES OF THE CITIZENS OF LOS ANGELES COUNTY AND OF THE STATE OF CALIFORNIA.

REV	DATE	BY	APP	REG NO	EXPIRES	SEAL HOLDER	DESCRIPTION

DESIGNED BY J. RIMORIN
DRAWN BY R. VENEGAS
CHECKED BY J. RIMORIN
IN CHARGE N. BUSCH
DATE 7/13/2021

Metro
LOS ANGELES COUNTY METROPOLITAN TRANSPORTATION AUTHORITY

V&A INC.
975 S. FAIR OAKS AVE.
PASADENA, CA 91105
213.972.9700

HDR ENGINEERING
350 S. GRAND AVENUE SUITE 2300
LOS ANGELES, CA 90071
(213) 2354800

SUBMITTED: _____ PROJECT MANAGER

APPROVED: _____

LINK UNION STATION PROJECT
ONSITE
CIVIL PLAN
PHASE B

CONTRACT NO

DRAWING NO C-002 REV

SCALE 1" = 40'

SHEET NO 41 of 72

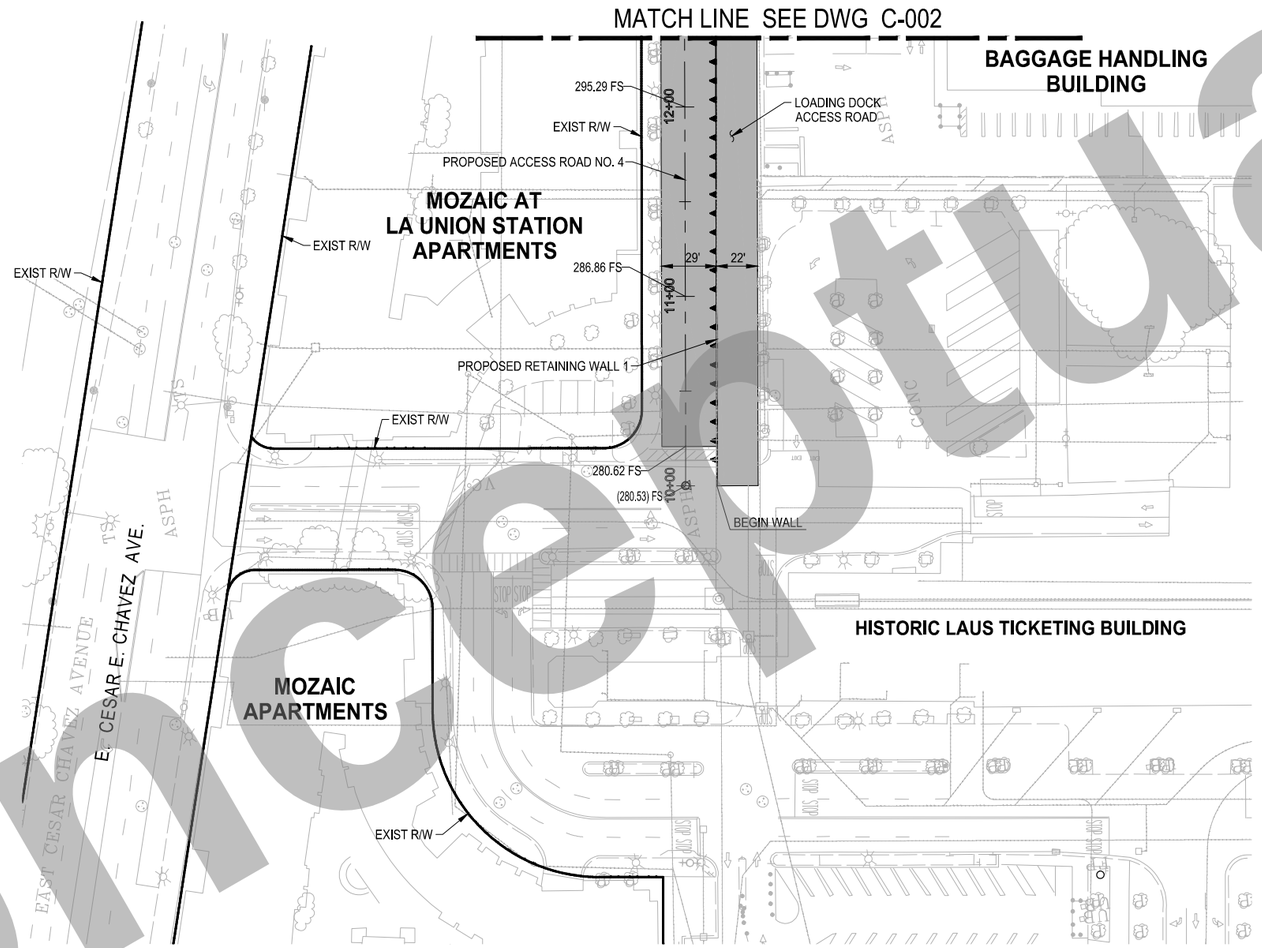

LEGEND

PROPOSED ACCESS ROAD

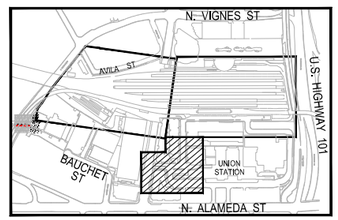

KEY MAP

N

40 0 40 80

1"=40'

CONCEPTUAL DESIGN SUBMITTAL
NOT FOR CONSTRUCTION

Conceptual

THE PREPARATION OF THIS DRAWING HAS BEEN FINANCED IN PART THROUGH A GRANT FROM THE U.S. DEPARTMENT OF TRANSPORTATION, FEDERAL TRANSIT ADMINISTRATION (FTA), UNDER THE FEDERAL TRANSIT ACT OF 1964, AS AMENDED, AND IN PART BY THE TAXES OF THE CITIZENS OF LOS ANGELES COUNTY AND OF THE STATE OF CALIFORNIA.

REV	DATE	BY	APP	REG NO	EXPIRES	SEAL HOLDER	DESCRIPTION

DESIGNED BY J. RIMORIN
DRAWN BY R. VENEGAS
CHECKED BY J. RIMORIN
IN CHARGE N. BUSCH
DATE 7/13/2021

Metro
LOS ANGELES COUNTY METROPOLITAN TRANSPORTATION AUTHORITY
V&A INC.
975 S. FAIR OAKS AVE.
PASADENA, CA 91105
213.972.9700
HDR ENGINEERING
350 S. GRAND AVENUE SUITE 2350
LOS ANGELES, CA 90071
(213) 2354800

SUBMITTED: _____ PROJECT MANAGER

APPROVED: _____

LINK UNION STATION PROJECT
ONSITE
CIVIL PLAN
PHASE B

CONTRACT NO

DRAWING NO C-003 REV

SCALE 1" = 40'

SHEET NO 42 of 72

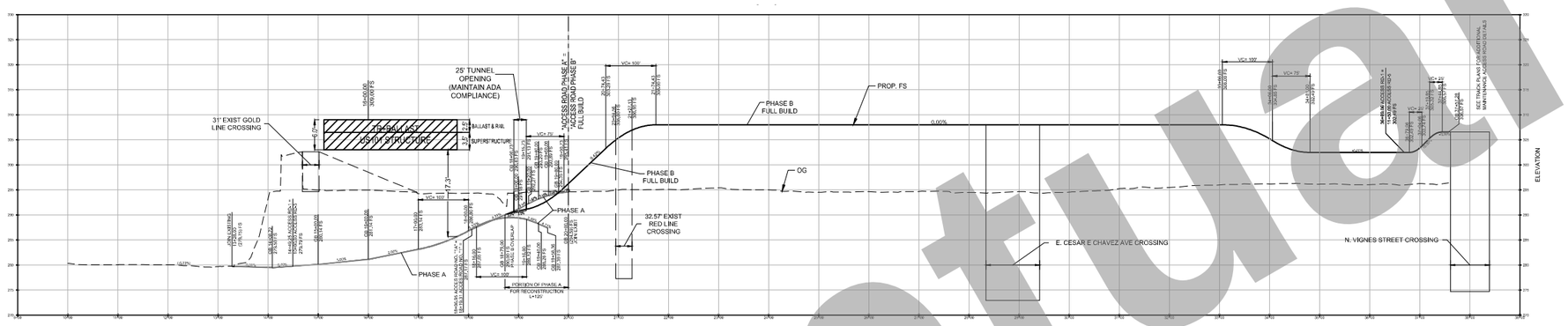

ACCESS ROAD - 1 PROFILE

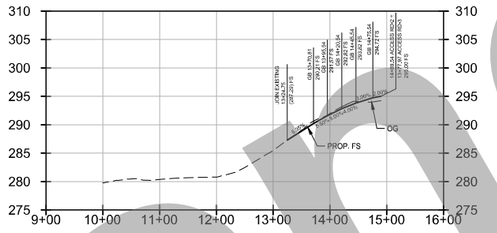

ACCESS ROAD - 2 PROFILE

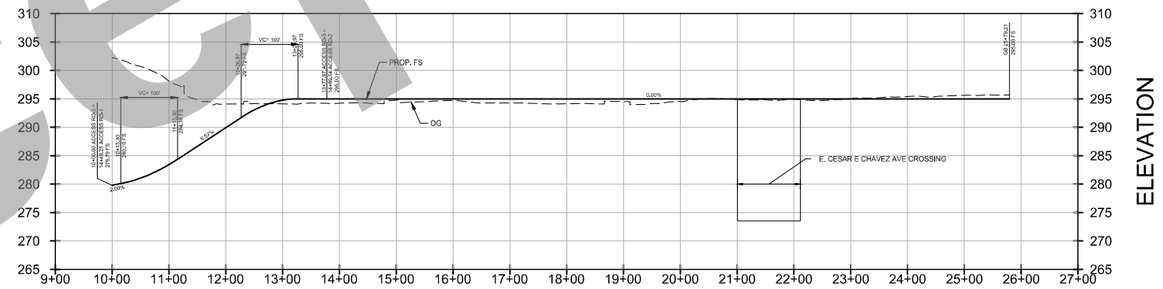

ACCESS ROAD - 3 PROFILE

Conceptual

CONCEPTUAL DESIGN SUBMITTAL
NOT FOR CONSTRUCTION

THE PREPARATION OF THIS DRAWING HAS BEEN FINANCED IN PART THROUGH A GRANT FROM THE U.S. DEPARTMENT OF TRANSPORTATION, FEDERAL TRANSIT ADMINISTRATION (FTA), UNDER THE FEDERAL TRANSIT ACT OF 1964, AS AMENDED, AND IN PART BY THE TAXES OF THE CITIZENS OF LOS ANGELES COUNTY AND OF THE STATE OF CALIFORNIA.

REV	DATE	BY	APP	REG NO	EXPIRES	SEAL HOLDER	DESCRIPTION

DESIGNED BY: J. RIMORIN
DRAWN BY: R. VENEGAS
CHECKED BY: J. RIMORIN
IN CHARGE: N. BUSCH
DATE: 7/13/2021

Metro
LOS ANGELES COUNTY
METROPOLITAN TRANSPORTATION AUTHORITY

V&A INC.
975 S. FAIR OAKS AVE.
PASADENA, CA 91105
213.972.9700

HDR ENGINEERING
350 S. GRAND AVENUE
SUITE 2300
LOS ANGELES, CA 90071
(213) 2354800

SUBMITTED: _____ PROJECT MANAGER
APPROVED: _____

LINK UNION STATION PROJECT
ONSITE
CIVIL PLAN
PHASE B
ACCESS ROAD PROFILE

CONTRACT NO
DRAWING NO: CR-201
REV
SCALE
SHEET NO: 43 of 72

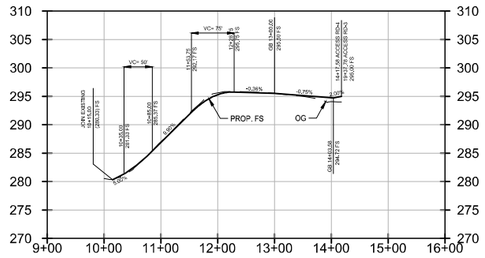

ACCESS ROAD - 4 PROFILE

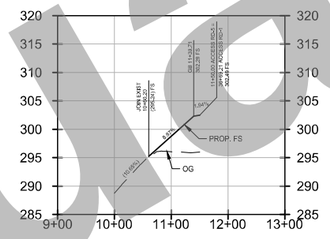

ACCESS ROAD - 5 PROFILE

Conceptual

CONCEPTUAL DESIGN SUBMITTAL
NOT FOR CONSTRUCTION

THE PREPARATION OF THIS DRAWING HAS BEEN FINANCED IN PART THROUGH A GRANT FROM THE U.S. DEPARTMENT OF TRANSPORTATION, FEDERAL TRANSIT ADMINISTRATION (FTA), UNDER THE FEDERAL TRANSIT ACT OF 1964, AS AMENDED, AND IN PART BY THE TAXES OF THE CITIZENS OF LOS ANGELES COUNTY AND OF THE STATE OF CALIFORNIA.

REV	DATE	BY	APP	REG NO	EXPIRES	SEAL HOLDER	DESCRIPTION

DESIGNED BY J. RIMORIN
DRAWN BY R. VENEGAS
CHECKED BY J. RIMORIN
IN CHARGE N. BUSCH
DATE 7/13/2021

Metro
LOS ANGELES COUNTY
METROPOLITAN TRANSPORTATION AUTHORITY

V&A INC.
975 S. FAIR OAKS AVE.
PASADENA, CA 91105
213.972.9700

HDR ENGINEERING
350 S. GRAND AVENUE
SUITE 2300
LOS ANGELES, CA 90071
(213) 2354800

SUBMITTED: _____ PROJECT MANAGER
APPROVED: _____

LINK UNION STATION PROJECT

ONSITE
CIVIL PLAN
PHASE B
ACCESS ROAD PROFILE

CONTRACT NO
DRAWING NO CR-202
REV
SCALE
SHEET NO 44 of 72

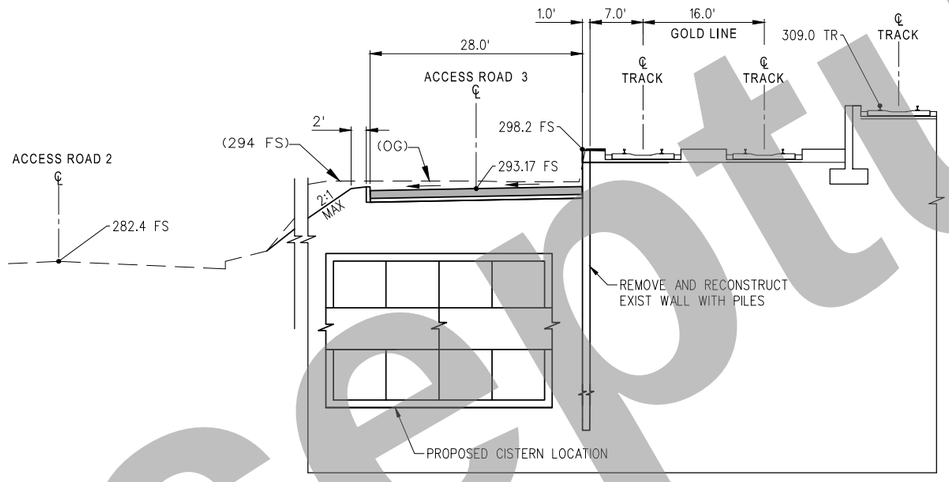

SECTION A-A
N.T.S.

Conceptual

CONCEPTUAL DESIGN SUBMITTAL
NOT FOR CONSTRUCTION

THE PREPARATION OF THIS DRAWING HAS BEEN FINANCED IN PART THROUGH A GRANT FROM THE U.S. DEPARTMENT OF TRANSPORTATION, FEDERAL TRANSIT ADMINISTRATION (FTA), UNDER THE FEDERAL TRANSIT ACT OF 1964, AS AMENDED, AND IN PART BY THE TAXES OF THE CITIZENS OF LOS ANGELES COUNTY AND OF THE STATE OF CALIFORNIA.

REV	DATE	BY	APP	REG NO	EXPIRES	SEAL HOLDER	DESCRIPTION

DESIGNED BY J. RIMORIN
DRAWN BY R. VENEGAS
CHECKED BY J. RIMORIN
IN CHARGE N. BUSCH
DATE 7/13/2021

Metro
LOS ANGELES COUNTY
METROPOLITAN TRANSPORTATION AUTHORITY

V&A INC.
975 S. FAIR OAKS AVE.
PASADENA, CA 91105
213.972.9700

HDR ENGINEERING
350 S. GRAND AVENUE
SUITE 2300
LOS ANGELES, CA 90071
(213) 236-6800

SUBMITTED: _____ PROJECT MANAGER

APPROVED: _____

LINK UNION STATION PROJECT
ONSITE
CIVIL PLAN
PHASE B
CROSS SECTION

CONTRACT NO
DRAWING NO CR-301 REV
SCALE NO SCALE
SHEET NO 45 of 72

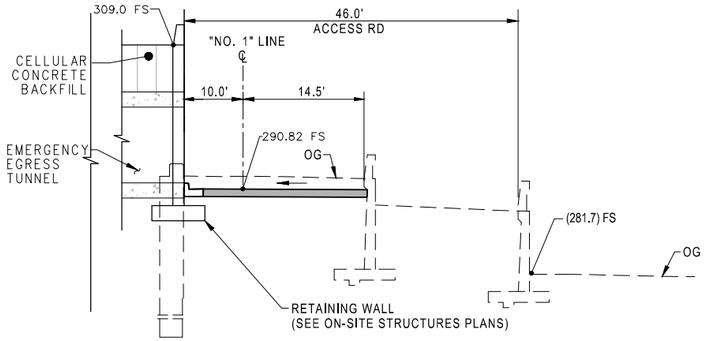

SECTION B-B
N.T.S.

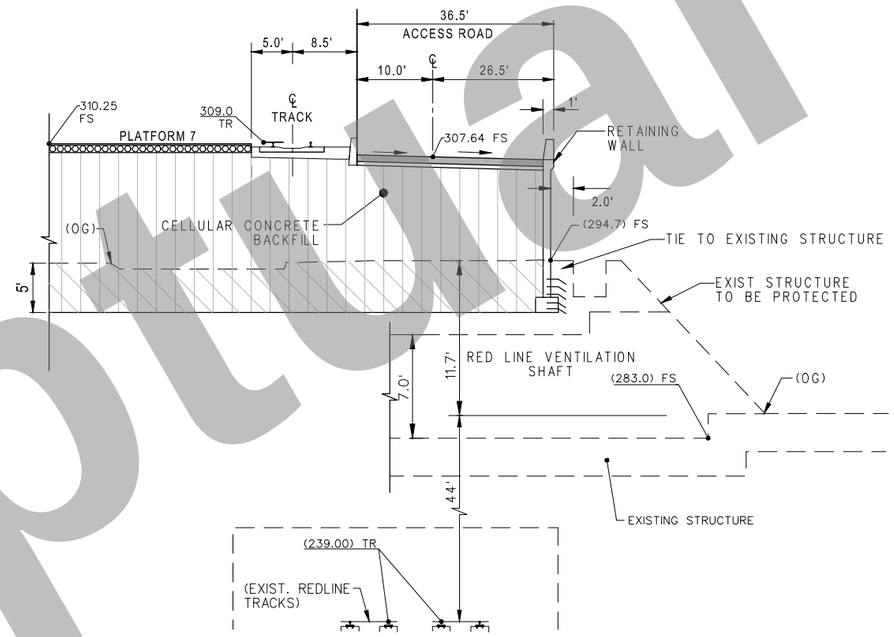

SECTION C-C
N.T.S.

Conceptual

CONCEPTUAL DESIGN SUBMITTAL
NOT FOR CONSTRUCTION

THE PREPARATION OF THIS DRAWING HAS BEEN FINANCED IN PART THROUGH A GRANT FROM THE U.S. DEPARTMENT OF TRANSPORTATION, FEDERAL TRANSIT ADMINISTRATION (FTA), UNDER THE FEDERAL TRANSIT ACT OF 1964, AS AMENDED, AND IN PART BY THE TAXES OF THE CITIZENS OF LOS ANGELES COUNTY AND OF THE STATE OF CALIFORNIA.

REV	DATE	BY	APP	REG NO	EXPIRES	SEAL HOLDER	DESCRIPTION

DESIGNED BY: J. RIMORIN
DRAWN BY: R. VENEGAS
CHECKED BY: J. RIMORIN
IN CHARGE: N. BUSCH
DATE: 7/13/2021

LOS ANGELES COUNTY
METROPOLITAN TRANSPORTATION AUTHORITY

V&A INC.
975 S. FAIR OAKS AVE.
PASADENA, CA 91105
213.972.9700

HDR ENGINEERING
350 S. GRAND AVENUE
SUITE 2200
LOS ANGELES, CA 90071
(213) 2354800

SUBMITTED: _____ PROJECT MANAGER

APPROVED: _____

LINK UNION STATION PROJECT
ONSITE
CIVIL PLAN
PHASE B
CROSS SECTION

CONTRACT NO
DRAWING NO: CR-302
REV
SCALE: NO SCALE
SHEET NO: 46 of 72

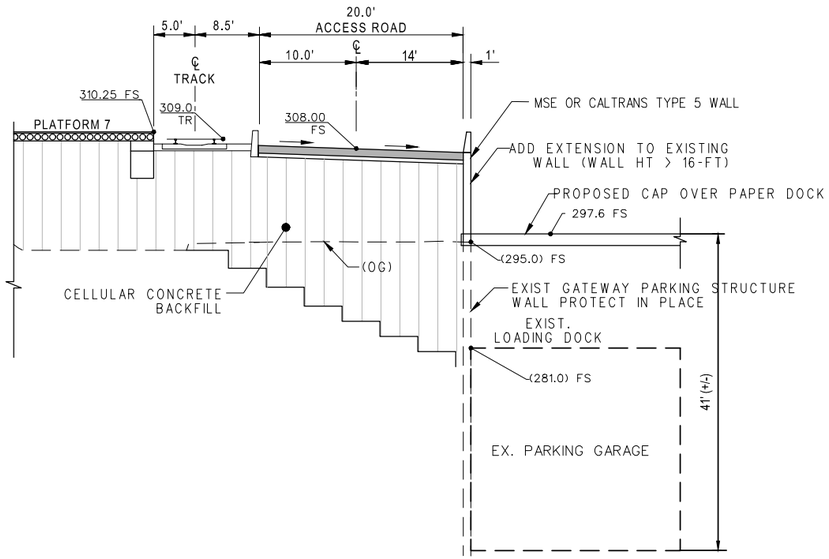

SECTION D-D
N.T.S.

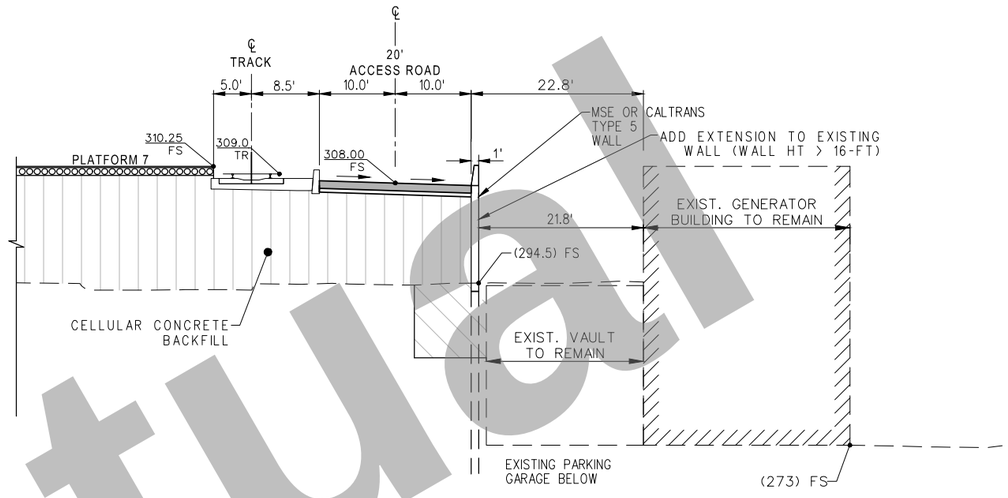

SECTION E-E
N.T.S.

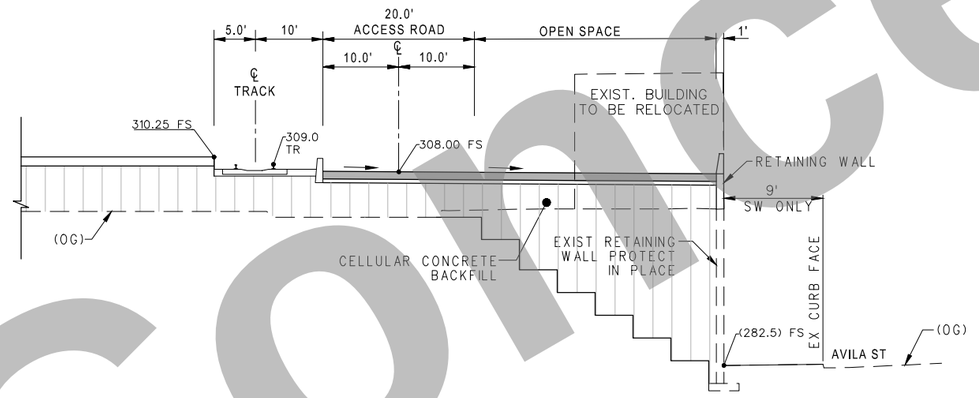

SECTION F-F
N.T.S.

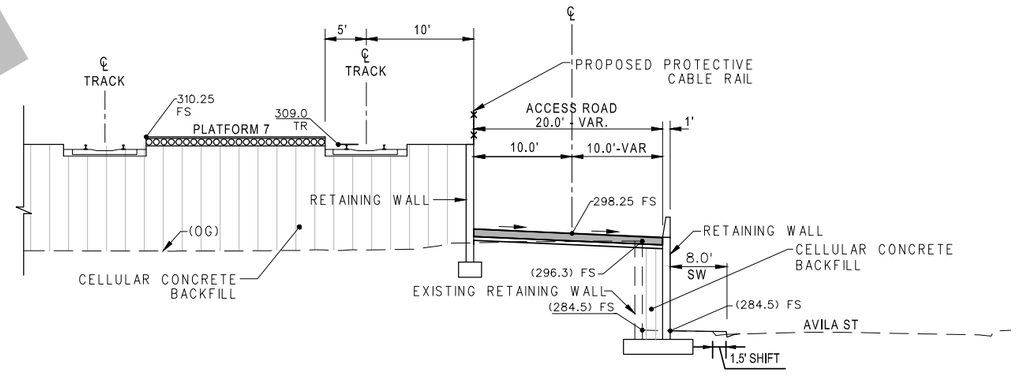

SECTION G-G
N.T.S.

CONCEPTUAL DESIGN SUBMITTAL
NOT FOR CONSTRUCTION

Conceptual

THE PREPARATION OF THIS DRAWING HAS BEEN FINANCED IN PART THROUGH A GRANT FROM THE U.S. DEPARTMENT OF TRANSPORTATION, FEDERAL TRANSIT ADMINISTRATION (FTA), UNDER THE FEDERAL TRANSIT ACT OF 1964, AS AMENDED, AND IN PART BY THE TAXES OF THE CITIZENS OF LOS ANGELES COUNTY AND OF THE STATE OF CALIFORNIA.

REV	DATE	BY	APP	REG NO	EXPIRES	SEAL HOLDER	DESCRIPTION

DESIGNED BY: J. RIMORIN
DRAWN BY: R. VENEGAS
CHECKED BY: J. RIMORIN
IN CHARGE: N. BUSCH
DATE: 7/13/2021

Metro
LOS ANGELES COUNTY
METROPOLITAN TRANSPORTATION AUTHORITY

V&A INC.
975 S. FAIR OAKS AVE.
PASADENA, CA 91105
213.972.9700

HDR ENGINEERING
350 S. GRAND AVENUE
SUITE 2300
LOS ANGELES, CA 90071
(213) 236-0800

SUBMITTED: _____ PROJECT MANAGER
APPROVED: _____

LINK UNION STATION PROJECT
EXISTING FACILITIES
DISPOSITION PLAN
PHASE B
CROSS SECTION

CONTRACT NO
DRAWING NO: CR-303
REV
SCALE: NO SCALE
SHEET NO: 47 of 72

GENERAL NOTES:

1. SEE DRAWING C-001 FOR NOTES & G1-002 FOR KEY MAP.
2. FOR EXISTING UTILITIES OFFSITE, SEE OFFSITE UTILITIES.
3. FOR ADDITIONAL EXISTING UTILITY INFORMATION, SEE DRAWING CU-214 & CU-215.
4. MODIFICATIONS TO UTILITIES AS PART OF PHASE A OF THE LINK UNION STATION PROJECT ARE CONSIDERED AN EXISTING CONDITION AND ARE ADDRESSED FOR THE LAUS STATION AREA IN DRAWINGS CU-211 THROUGH CU-213.

LEGEND

(####) UTILITY ID. SEE GENERAL NOTE 3 HEREON.

- STORM DRAIN IN CONFLICT
- STORM DRAIN TO REMAIN
- SEWER LINE IN CONFLICT
- SEWER LINE TO REMAIN
- WATER LINE IN CONFLICT
- WATER LINE TO REMAIN
- GAS SERVICE IN CONFLICT
- GAS SERVICE TO REMAIN
- ELECTRICAL LINE IN CONFLICT
- ELECTRICAL LINE TO REMAIN
- OVERHEAD LINE IN CONFLICT
- OVERHEAD LINE TO REMAIN
- FIBER OPTIC IN CONFLICT
- FIBER OPTIC TO REMAIN
- TELECOM LINE IN CONFLICT
- TELECOM LINE TO REMAIN
- ELECTRICAL SERVICE IN CONFLICT
- AIR/STEAM LINE IN CONFLICT
- UNDERDRAIN IN CONFLICT

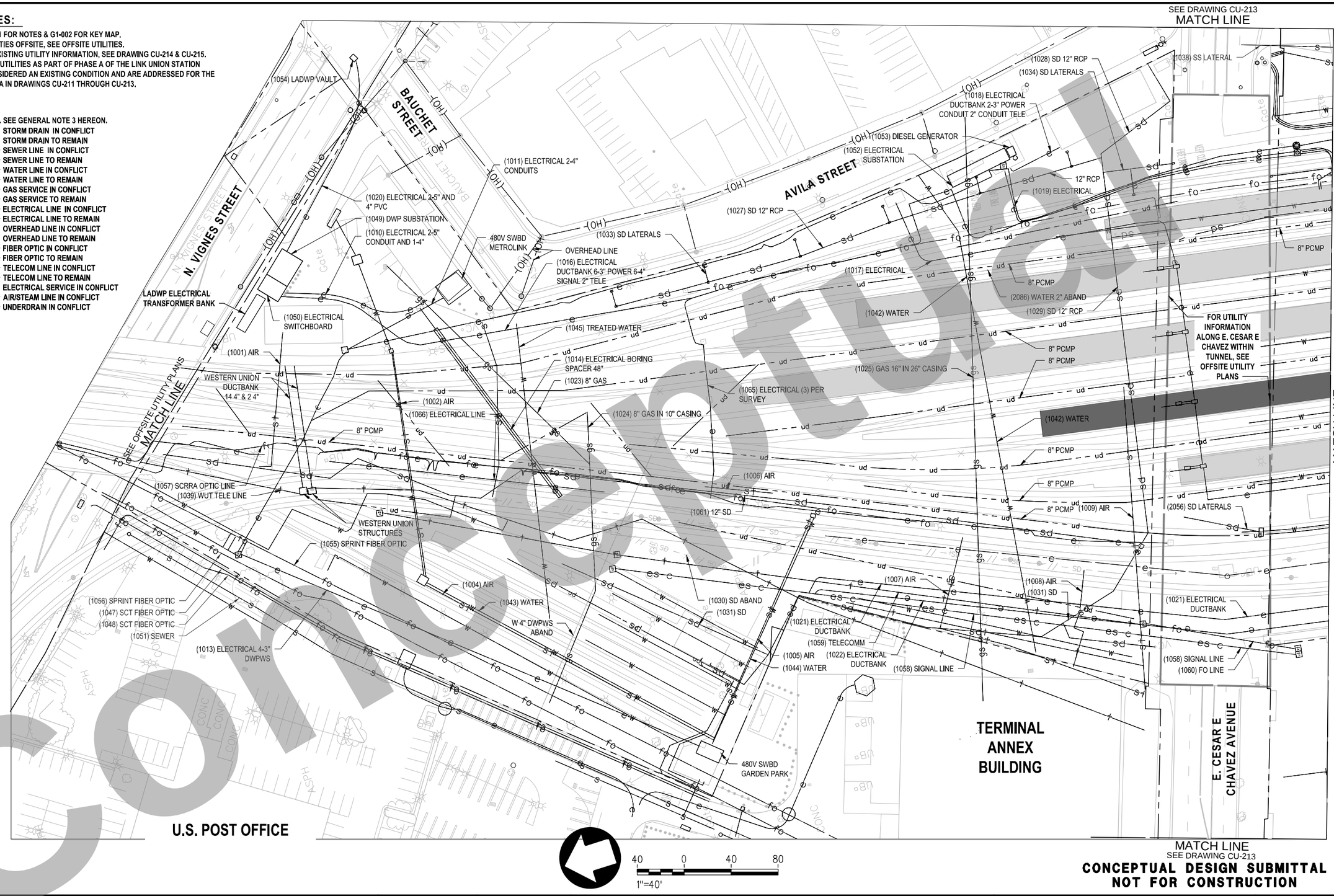

CONCEPTUAL DESIGN SUBMITTAL NOT FOR CONSTRUCTION

Concept

THE PREPARATION OF THIS DRAWING HAS BEEN FINANCED IN PART THROUGH A GRANT FROM THE U.S. DEPARTMENT OF TRANSPORTATION, FEDERAL TRANSIT ADMINISTRATION (FTA), UNDER THE FEDERAL TRANSIT ACT OF 1964, AS AMENDED, AND IN PART BY THE TAXES OF THE CITIZENS OF LOS ANGELES COUNTY AND OF THE STATE OF CALIFORNIA.

REV	DATE	BY	APP	REG NO	EXPIRES	SEAL HOLDER	DESCRIPTION

DESIGNED BY A.SO
DRAWN BY A.SO
CHECKED BY E.GUTIERREZ
IN CHARGE T.KIM
DATE 7/13/2021

Metro
LOS ANGELES COUNTY
METROPOLITAN TRANSPORTATION AUTHORITY

HDR ENGINEERING
350 S. GRAND AVENUE
SUITE 2900
LOS ANGELES, CA 90071
(213) 239-5800

SUBMITTED: _____ PROJECT MANAGER
APPROVED: _____

LINK UNION STATION PROJECT
CIVIL DRAWINGS
STATION EXISTING UTILITY PLAN - 1

CONTRACT NO
DRAWING NO CU-211
REV --
SCALE 1" = 40'
SHEET NO 48 of 72

SEE DRAWING CU-213
MATCH LINE

METRO GATEWAY BUILDING

EAST PORTAL BUILDING

SS INSIDE PARKING STRUCTURE

SS-A136 AS-BUILT

SS INSIDE PARKING STRUCTURE

(2092) WATER

30" RCP

(2089) WATER 2"
(2109) WATER PER AIRX

(2001) AIR 1.5"

(2002) AIR 1.5"

(2095) WATER

(2051) SD 30" RCP

(2043) GAS

(2061) SS

SD 30" RCP

(2106) ELECTRICAL PER SURVEY

(2057) SD LATERALS

(2049) SD

(2093) WATER ABAND

WATER LINE ABAND

(2055) SD

(2117) FIBER OPTIC 4-4"

(2096) WATER

(2119) COMMUNICATION 3-4" (CF CCTV PA-LED DT)

(2058) SD LATERALS

PLATFORM 7

(2053) SD

(2008) AIR 1.5"

(2059) SD

DC NO. 7

(2088) WATER 2"

(2054) SD

(2060) SD LATERALS

8" PCMP

(2047) CABLE DUCTBANK

(2087) WATER 2"

(2086) WATER 2" ABAND

(2082) WATER 2"

8" PCMP

PLATFORM 6

(2009) AIR 1.5"

(2040) ELECTRICAL 3" DUCTBANK

(2010) AIR 1.5"

(2083) WATER 2"

(2003) AIR 1.5"

(2012) AIR 1.5"

(2052) SD 30" RCP

(2084) WATER 2"

(2034) ELECTRICAL DUCTBANK 1.5'X1'

(2039) ELECTRICAL OVERHEAD CONDUIT

8" PCMP

(2094) WATER 2"

8" PCMP

(2120) POWER 2-3"

(2085) WATER 2"

(2011) AIR 1.5"

8" PCMP

DC NO. 6

(2078) WATER 2" PLAT 5 NORTH PASSAGE

PLATFORM 5

(2004) AIR 1.5"

(2013) AIR 1.5"

(2014) AIR 1.5"

(2080) WATER 2"

(2038) ELECTRICAL OVERHEAD CONDUIT

(2032) ELECTRICAL DUCTBANK 1'-8"X10"

(2037) ELECTRICAL OVERHEAD CONDUIT

(2121) ELECTRICAL DUCTBANK

(2081) WATER 2"

(2079) WATER 2"

8" PCMP

DC NO. 1

(2026) ELECTRICAL DUCTBANK

(2050) SD 30" RCP

PLATFORM 4

(2040) ELECTRICAL 3" DUCTBANK

(2005) AIR 1.5"

(2016) AIR 1.5"

(2036) ELECTRICAL DUCTBANK 2'X1'

8" PCMP PULL BOX 6

(2077) WATER 2"

(2074) WATER 2"

(2015) AIR 1.5"

(2075) WATER 2"

(2076) WATER 2"

(2097) SUBSTATION B

(2027) ELECTRICAL DUCTBANK

(2041) ELECTRICAL DUCTBANK

8" PCMP

DC NO. 2

PLATFORM 3

(2006) AIR 1.5"

(2018) AIR 1.5"

8" PCMP

(2072) WATER 2"

(2035) ELECTRICAL DUCTBANK 2'X1'

(2116) ELECTRICAL

8" PCMP

(2090) WATER 20"

(2073) WATER 2"

(2033) ELECTRICAL DUCTBANK 1'X8"X10"

(2070) WATER 2"

(2017) AIR 1.5"

(2071) WATER 2"

DC NO. 3

(2007) AIR 1.5"

(2062) TELE DUCTBANK

(2044) CABLE 2'X2'4 DUCTBANK

8" PCMP

(2066) WATER 2"

(2050) SD 30" RCP

PLATFORM 2

(2019) AIR 1.5"

(2020) AIR 1.5"

(2025) ELECTRICAL DUCTBANK

(2024) ELECTRICAL DUCTBANK

(2065) TELE LINE

(2067) WATER 2"

(2069) WATER 2"

8" PCMP

TRANSFORMER

(2068) WATER 2"

(2052) SD 30" RCP

TRANSFORMER

(2022) ELECTRICAL CONDUITS 3"- 8 TOTAL

(2021) ELECTRICAL CONDUITS 4" 2 TOTAL POWER @35 KV XLP

(2029) ELECTRICAL DUCTBANK 2'x2'4"

(2063) TELE DUCTBANK

(2030) ELECTRICAL DUCTBANK 2'x2'4"

DC NO. 4

(2063) TELE DUCTBANK

(2048) CABLE DUCTBANK

(2045) CABLE 2'X2'4 DUCTBANK

(2028) ELECTRICAL DUCTBANK 2'x2'4"

(2045) CABLE 2'X2'4 DUCTBANK

(2064) TELE DUCTBANK CONDUITS 5-3" 2-2" 2-2,5"

(2046) CABLE 2'X2'4 DUCTBANK

24" RCP

(1022) ELECTRICAL DUCTBANK

(2023) ELECTRICAL CONDUITS 4-3" 3-2" 2-2.5"

UTILITY TUNNEL

7' WIDE X 8'6" HIGH UTILITY TUNNEL TOP OF CONC. BOX IS AT ELEV. 284

(2028) ELECTRICAL DUCTBANK 2'x2'4"

(2091) WATER

(E) 115" RC ARCH PER LA PLAN D-8912

(2105) ELECTRICAL PER AIRX SURVEY - WEST SIDE

15" RCP

(2098) ELECTRICAL

(2100) ELECTRICAL SWITCHBOARD

(2104) E CONDUIT 2-4" PVC

(2103) FIBER OPTIC FOR GOLDLINE

(2108) WATER

(2101) ELECTRICAL BACKUP GENERATOR

(2102) OIL FUEL TANK RED ROOM VAULT

(2099) ELECTRICAL

MOZAIC APARTMENTS

BAGGAGE HANDLING BUILDING

METROPOLITAN WATER DISTRICT

EL MONTE BUSWAY

US-101

℄ BENT 3

℄ BENT 2

℄ BENT 1

SEE DRAWING CU-211
MATCH LINE

MATCH LINE
SEE DRAWING CU-213

GENERAL NOTES:

1. SEE SHEET CU-211 FOR NOTES.

40 0 40 80
1"=40'

CONCEPTUAL DESIGN SUBMITTAL
NOT FOR CONSTRUCTION

Conceptual

THE PREPARATION OF THIS DRAWING HAS BEEN FINANCED IN PART THROUGH A GRANT FROM THE U.S. DEPARTMENT OF TRANSPORTATION, FEDERAL TRANSIT ADMINISTRATION (FTA), UNDER THE FEDERAL TRANSIT ACT OF 1964, AS AMENDED, AND IN PART BY THE TAXES OF THE CITIZENS OF LOS ANGELES COUNTY AND OF THE STATE OF CALIFORNIA.

REV	DATE	BY	APP	REG NO	EXPIRES	SEAL HOLDER	DESCRIPTION

DESIGNED BY A.SO
DRAWN BY A.SO
CHECKED BY E.GUTIERREZ
IN CHARGE T.KIM
DATE 7/13/2021

Metro
LOS ANGELES COUNTY
METROPOLITAN TRANSPORTATION AUTHORITY

HDR ENGINEERING
350 S. GRAND AVENUE
SUITE 2900
LOS ANGELES, CA 90071
(213) 239-5800

SUBMITTED: _____ PROJECT MANAGER

APPROVED: _____

LINK UNION STATION PROJECT
CIVIL DRAWINGS
STATION EXISTING UTILITY PLAN - 2

CONTRACT NO

DRAWING NO CU-212 REV --

SCALE 1" = 40'

SHEET NO 49 of 72

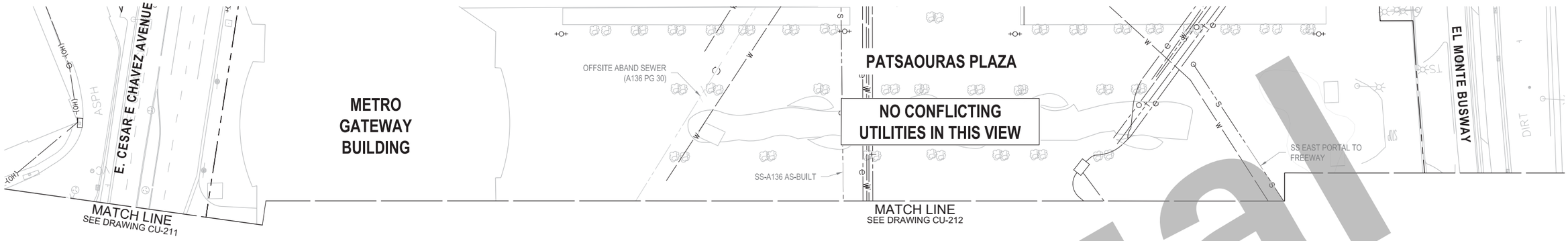

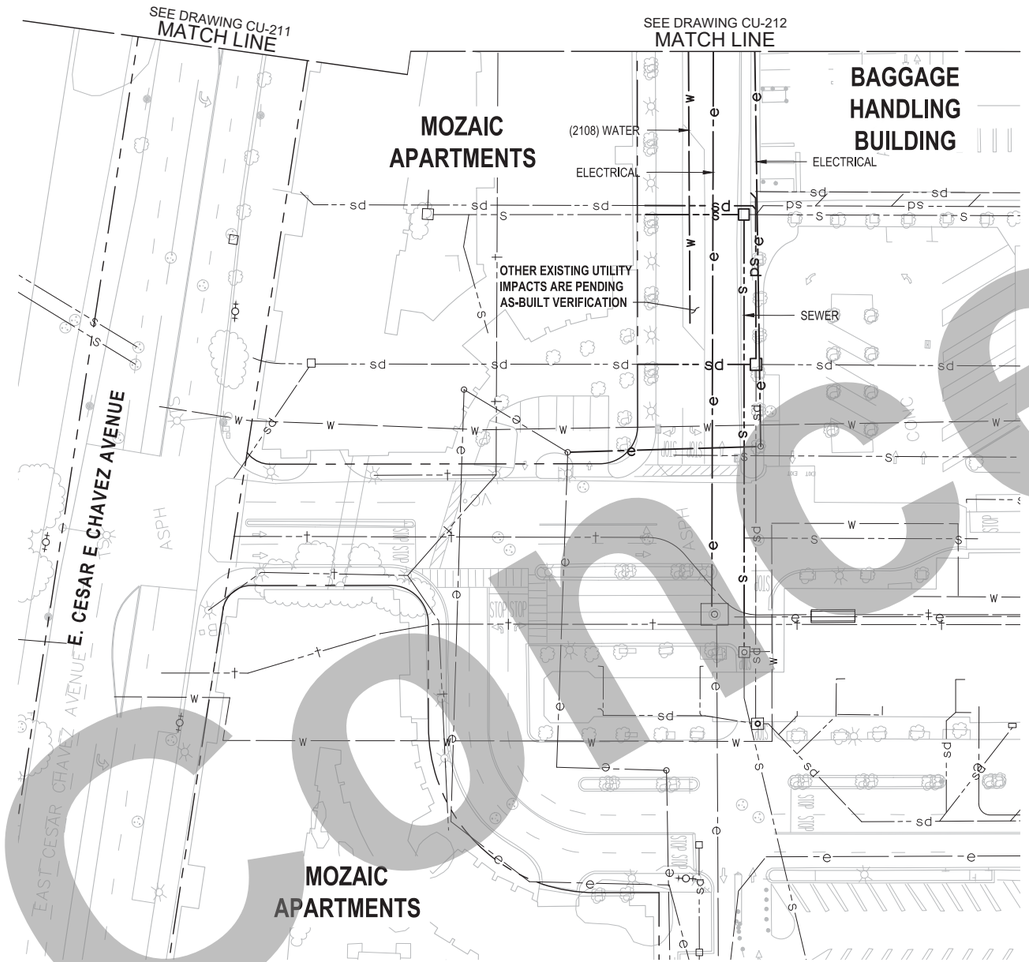

GENERAL NOTES:

1. SEE SHEET CU-211 FOR NOTES.

40 0 40 80
1"=40'

CONCEPTUAL DESIGN SUBMITTAL
NOT FOR CONSTRUCTION

Conceptual

THE PREPARATION OF THIS DRAWING HAS BEEN FINANCED IN PART THROUGH A GRANT FROM THE U.S. DEPARTMENT OF _ TRANSPORTATION, FEDERAL TRANSIT ADMINISTRATION (FTA), UNDER THE FEDERAL TRANSIT ACT OF 1964, AS AMENDED, AND IN PART BY THE TAXES OF THE CITIZENS OF LOS ANGELES COUNTY AND OF THE STATE OF CALIFORNIA.

REV	DATE	BY	APP	REG NO	EXPIRES	SEAL HOLDER	DESCRIPTION

DESIGNED BY A.SO
DRAWN BY A.SO
CHECKED BY E.GUTIERREZ
IN CHARGE T.KIM
DATE 7/13/2021

Metro
LOS ANGELES COUNTY
METROPOLITAN TRANSPORTATION AUTHORITY

w2 design
50 SOUTH DELACEY AVENUE, SUITE 100
PASADENA, CALIFORNIA 91105
T (626) 396-9853 | F (626) 788-1437
EMAIL: INFO@W2DESIGNINC.COM

HDR ENGINEERING
350 S. GRAND AVENUE
SUITE 2500
LOS ANGELES, CA 90071
(213) 239-5800

SUBMITTED: _____
PROJECT MANAGER

APPROVED: _____

LINK UNION STATION PROJECT
CIVIL DRAWINGS
STATION EXISTING UTILITY PLAN - 3

CONTRACT NO

DRAWING NO CU-213 | REV --

SCALE 1" = 40'

SHEET NO 50 of 72

ID	UTILITY TYPE	SIZE	UTILITY LOCATION	AS-BUILT	DISPOSITION
1001	AIR	UNKNOWN	CP TERMINAL	CHINA TOWN STRUCTURE C6390 UG-001	REMOVE
1002	AIR	UNKNOWN	CP TERMINAL	CHINA TOWN STRUCTURE C6390 UG-001	REMOVE
1003	AIR	UNKNOWN	CP TERMINAL	CHINA TOWN STRUCTURE C6390 UG-001	REMOVE
1004	AIR	UNKNOWN	GARDEN TRACK	MISSION TOWER C6240 UT-1-2	REMOVE
1005	AIR	UNKNOWN	GARDEN TRACK	MISSION TOWER C6240 UT-1-2	REMOVE
1006	AIR	UNKNOWN	EAST OF GOLD LINE TRACK	MISSION TOWER C6240 UT-2	REMOVE
1007	AIR	UNKNOWN	EAST OF TERMINAL ANNEX	MISSION TOWER C6240 UT-1	REMOVE
1008	AIR	UNKNOWN	EAST OF TERMINAL ANNEX	MISSION TOWER C6240 UT-1	REMOVE
1009	AIR	UNKNOWN	EAST OF TERMINAL ANNEX	MISSION TOWER C6240 UT-1	REMOVE
1010	ELECTRICAL	2-5", 1-4"	AMTRAK MAINTENANCE	PASADENA BLUE LINE 6490 E-042	RELOCATE
1011	ELECTRICAL	2-4"	AMTRAK MAINTENANCE	PASADENA BLUE LINE 6490 E-042	RELOCATE
1012	ELECTRICAL	6-3"	AMTRAK MAINTENANCE TO GARDEN TRACK	PASADENA BLUE LINE 6490 E-042	RELOCATE
1013	ELECTRICAL	4-3"	GARDEN TRACK	CHINATOWN STRUCTURE C6390 UG-001	RELOCATE
1014	ELECTRICAL	48"	CP TERMINAL	PASADENA BLUE LINE EAST WALL C7300 C-105	RELOCATE
1015	ELECTRICAL	1.5"	VIGNES ST TO CESAR CHAVEZ AVE ALONG AVILA ST	PASADENA BLUE LINE C6490 E-042	RELOCATE
1016	ELECTRICAL, SIGNAL AND TELE	6-3", 6-4", 2"	AMTRAK MAINTENANCE TO CESAR CHAVEZ AVE	PASADENA BLUE LINE C6490 E-042	RELOCATE
1017	ELECTRICAL	UNKNOWN	AVILA ST TO CESAR CHAVEZ AVE	METROLINK C-3109-11 UP-01	RELOCATE
1018	ELECTRICAL AND TELE	2-3", 2"	NORTH CESAR CHAVEZ AVE ALONG AVILA ST	PASADENA BLUE LINE C6490 E-042	RELOCATE
1019	ELECTRICAL	UNKNOWN	AVILA ST TO TRACKS	PASADENA BLUE LINE C6490 E-042	RELOCATE
1020	ELECTRICAL	2-5", 4"	VIGNES ST	PASADENA BLUE LINE C6490 E-042	PROTECT IN PLACE
1021	ELECTRICAL	UNKNOWN	GARDEN TRACK TO UNION STATION VILLAGE	SCRTD METRO RAIL PROJECT CONTRACT NO. A135	RELOCATE
1022	ELECTRICAL	UNKNOWN	GARDEN TRACK TO UNION STATION VILLAGE	SCRTD METRO RAIL PROJECT CONTRACT NO. A135	RELOCATE
1023	GAS	8"	AMTRAK MAINTENANCE TO GARDEN TRACK	PASADENA BLUE LINE C7300 C-105	REMOVE
1024	GAS	8"	AMTRAK MAINTENANCE TO GARDEN TRACK	PASADENA BLUE LINE C7300 C-105	REMOVE
1025	GAS	16" IN 26" CASING	NORTH OF CESAR CHAVEZ AVE	CHINA TOWN STRUCTURE C6390 UG-001	REMOVE
1026	GAS	12"	CESAR CHAVEZ AVE OFFSITE	D-3647	REMOVE
1027	STORM DRAIN	12"	AVILA ST	D-3804, D-3647, D-3648, LA000167467	REMOVE
1028	STORM DRAIN	12"	EAST OF TRACK 14	D-3804, D-3647, D-3648, LA000167470	REMOVE
1029	STORM DRAIN	12	NORTH OF CESAR CHAVEZ AVE	MISSION TOWER C6240 UT-1, AMTRAK RUN THROUGH	REMOVE
1030	STORM DRAIN	UNKNOWN	EAST OF GARDEN TRACK	MISSION TOWER C6240 UT-2	REMOVE
1031	STORM DRAIN	UNKNOWN	GARDEN TRACK TO CESAR CHAVEZ AVE	CHINA TOWN STRUCTURE C6390 UG-001	REMOVE
1033	STORM DRAIN	UNKNOWN	ALONG AVILA ST	D-3804, D-3647, D-3648, LA000167467	REMOVE
1034	STORM DRAIN	UNKNOWN	NORTH OF CESAR CHAVEZ AVE	D-3804, D-3647, D-3648, LA000167467	REMOVE
1038	SEWER	UNKNOWN	METRO GATEWAY	FIELD VISIT	REMOVE
1039	TELECOM	UNKNOWN	VIGNES ST TO GARDEN TRACK	CHINA TOWN STRUCTURE C6390 UG-001	RELOCATE
1040	TELECOM	UNKNOWN	EAST OF GARDEN TRACK	MISSION TOWER C6240 UT-2	RELOCATE
1041	TELECOM	UNKNOWN	EAST OF TERMINAL ANNEX	MISSION TOWER C6240 UT-2	RELOCATE
1042	WATER	UNKNOWN	AVILA ST TO TERMINAL ANNEX	MISSION TOWER C6240 UT-2	RELOCATE
1043	WATER	UNKNOWN	GARDEN TRACK	MISSION TOWER C6240 UT-2	RELOCATE
1044	WATER	UNKNOWN	GARDEN TRACK TO MAIN TRACK	MISSION TOWER C6240 UT-2	RELOCATE
1045	WATER	UNKNOWN	BAUCHET ST TO GARDEN TRACK	MISSION TOWER C6240 UT-2	RELOCATE
1046	WATER	UNKNOWN	GARDEN TRACK	MISSION TOWER C6240 UT-2	RELOCATE
1047	FIBER OPTICS	UNKNOWN	GARDEN TRACK	LABOE DEPT OF PUBLIC WORKS MAP	RELOCATE
1048	FIBER OPTICS	UNKNOWN	GARDEN TRACK	LABOE DEPT OF PUBLIC WORKS MAP	RELOCATE
1049	ELECTRICAL	UNKNOWN	AMTRAK MAINTENANCE	PASADENA BLUE LINE 6490 E-042	RELOCATE
1050	ELECTRICAL	UNKNOWN	AMTRAK MAINTENANCE	PASADENA BLUE LINE 6490 E-042	RELOCATE
1051	SEWER	UNKNOWN	GARDEN TRACK	CHINA TOWN STRUCTURE C6390 UG-001	REMOVE
1052	ELECTRICAL	UNKNOWN	NORTH OF CESAR CHAVEZ AVE	LAUS_PLATFORM7_AS-BUILTS	RELOCATE
1053	ELECTRICAL	UNKNOWN	NORTH OF CESAR CHAVEZ AVE	LAUS_PLATFORM7_AS-BUILTS	RELOCATE
1054	ELECTRICAL	UNKNOWN	INTERSECTION OF VIGNES ST AND BAUCHET ST	PASADENA BLUE LINE 6490 E-042	RELOCATE
1055	FIBER OPTICS	UNKNOWN	GARDEN TRACK	LABOE DEPT OF PUBLIC WORKS MAP	RELOCATE
1056	FIBER OPTICS	UNKNOWN	GARDEN TRACK	LABOE DEPT OF PUBLIC WORKS MAP	RELOCATE
1057	FIBER OPTICS	UNKNOWN	START AT GARDEN TRACK TO PATSAOURUS PLAZA	METROLINK POSITIVE TRAIN CONTROL PROJECT VJ001	RELOCATE
1058	SIGNAL	UNKNOWN	GARDEN TRACK	SP KEY #20 UNDERGROUND ELEC DATA SURVEY	RELOCATE
1059	TELECOM	UNKNOWN	GARDEN TRACK	SP KEY #20 UNDERGROUND ELEC DATA SURVEY	RELOCATE
1060	FIBER OPTICS	UNKNOWN	GARDEN TRACK	SP KEY #20 UNDERGROUND ELEC DATA SURVEY	RELOCATE
1061	STORM DRAIN	12"	EAST OF GARDEN TRACK	"CONTRACT NO C7300 SHT C-106 & C-102 LAUPT TO PASADENA UNION STATION PLATFORM NO 1"	REMOVE
1062	ELECTRICAL	UNKNOWN	EAST OF GARDEN TRACK	"PASADENA BLUE LINE P-101 UNION STATION TO CHINA TOWN TRACTION ELECTRIFICATION SYSTEM ADJUSTED PER AIRX SURVEY: 2017-08-11"	RELOCATE
1063	ELECTRICAL	UNKNOWN	CP TERMINAL	"PASADENA BLUE LINE P-101 UNION STATION TO CHINA TOWN TRACTION ELECTRIFICATION SYSTEM ADJUSTED PER AIRX SURVEY: 2017-08-11"	RELOCATE
1064	ELECTRICAL	UNKNOWN	EAST OF GARDEN TRACK	"PASADENA BLUE LINE P-101 UNION STATION TO CHINA TOWN TRACTION ELECTRIFICATION SYSTEM ADJUSTED PER AIRX SURVEY: 2017-08-11"	RELOCATE
1065	ELECTRICAL	UNKNOWN	EAST OF GARDEN TRACK	ADJUSTED PER AIRX SURVEY: 2017-08-11"	RELOCATE
1066	ELECTRICAL	UNKNOWN	EAST OF GARDEN TRACK	"PASADENA BLUE LINE P-101 UNION STATION TO CHINA TOWN TRACTION ELECTRIFICATION SYSTEM ADJUSTED PER AIRX SURVEY: 2017-08-11"	RELOCATE

CONCEPTUAL

CONCEPTUAL DESIGN SUBMITTAL
NOT FOR CONSTRUCTION

THE PREPARATION OF THIS DRAWING HAS BEEN FINANCED IN PART THROUGH A GRANT FROM THE U.S. DEPARTMENT OF TRANSPORTATION, FEDERAL TRANSIT ADMINISTRATION (FTA), UNDER THE FEDERAL TRANSIT ACT OF 1964, AS AMENDED, AND IN PART BY THE TAXES OF THE CITIZENS OF LOS ANGELES COUNTY AND OF THE STATE OF CALIFORNIA.

REV	DATE	BY	APP	REG NO	EXPIRES	SEAL HOLDER	DESCRIPTION

DESIGNED BY A.SO
DRAWN BY A.SO
CHECKED BY R.IBARRA
IN CHARGE T.KIM
DATE 7/13/2021

REGISTERED PROFESSIONAL ENGINEER
First Name Last Name
No. C XXXXX
Exp. XX/XX/XX
CIVIL
STATE OF CALIFORNIA

Metro
LOS ANGELES COUNTY
METROPOLITAN TRANSPORTATION AUTHORITY

w2 design
50 SOUTH DELACEY AVENUE, SUITE 100
PASADENA, CALIFORNIA 91105
T (626) 396-3653 | F (626) 768-7437
EMAIL: INFO@W2DESIGNINC.COM

HDR ENGINEERING
350 S. GRAND AVENUE
SUITE 2600
LOS ANGELES, CA 90071
(213) 239-5800

SUBMITTED: _____ PROJECT MANAGER

APPROVED: _____

LINK UNION STATION PROJECT
CIVIL DRAWINGS
STATION EXISTING UTILITY TABLE - 1

CONTRACT NO
DRAWING NO CU-214
REV --
SCALE 1" = 40'
SHEET NO 51 of 72

ID	UTILITY TYPE	SIZE	UTILITY LOCATION	AS-BUILT	DISPOSITION
2001	AIR	1.5"	ALONG PASSAGEWAY	AMTRAK LAUS RUN THRU TRACKS 35% DESIGN PLANS	REMOVE
2002	AIR	1.5"	ALONG PASSAGEWAY	AMTRAK LAUS RUN THRU TRACKS 35% DESIGN PLANS	REMOVE
2003	AIR	1.5"	ALONG PASSAGEWAY	AMTRAK LAUS RUN THRU TRACKS 35% DESIGN PLANS	REMOVE
2004	AIR	1.5"	ALONG PASSAGEWAY	AMTRAK LAUS RUN THRU TRACKS 35% DESIGN PLANS	REMOVE
2005	AIR	1.5"	ALONG PASSAGEWAY	AMTRAK LAUS RUN THRU TRACKS 35% DESIGN PLANS	REMOVE
2006	AIR	1.5"	ALONG PASSAGEWAY	AMTRAK LAUS RUN THRU TRACKS 35% DESIGN PLANS	REMOVE
2007	AIR	1.5"	ALONG PASSAGEWAY	AMTRAK LAUS RUN THRU TRACKS 35% DESIGN PLANS	REMOVE
2008	AIR	1.5"	EAST PORTAL	AMTRAK LAUS RUN THRU TRACKS 35% DESIGN PLANS	REMOVE
2009	AIR	1.5"	TRACK 12	AMTRAK LAUS RUN THRU TRACKS 35% DESIGN PLANS	REMOVE
2010	AIR	1.5"	TRACK 12	AMTRAK LAUS RUN THRU TRACKS 35% DESIGN PLANS	REMOVE
2011	AIR	1.5"	TRACK 11	AMTRAK LAUS RUN THRU TRACKS 35% DESIGN PLANS	REMOVE
2012	AIR	1.5"	TRACK 11	AMTRAK LAUS RUN THRU TRACKS 35% DESIGN PLANS	REMOVE
2013	AIR	1.5"	TRACK 9	AMTRAK LAUS RUN THRU TRACKS 35% DESIGN PLANS	REMOVE
2014	AIR	1.5"	TRACK 9	AMTRAK LAUS RUN THRU TRACKS 35% DESIGN PLANS	REMOVE
2015	AIR	1.5"	TRACK 7	AMTRAK LAUS RUN THRU TRACKS 35% DESIGN PLANS	REMOVE
2016	AIR	1.5"	TRACK 7	AMTRAK LAUS RUN THRU TRACKS 35% DESIGN PLANS	REMOVE
2017	AIR	1.5"	TRACK 5	AMTRAK LAUS RUN THRU TRACKS 35% DESIGN PLANS	REMOVE
2018	AIR	1.5"	TRACK 5	AMTRAK LAUS RUN THRU TRACKS 35% DESIGN PLANS	REMOVE
2019	AIR	1.5"	TRACK 3	AMTRAK LAUS RUN THRU TRACKS 35% DESIGN PLANS	REMOVE
2020	AIR	1.5"	TRACK 3	AMTRAK LAUS RUN THRU TRACKS 35% DESIGN PLANS	REMOVE
2021	ELECTRICAL	2-4"	PLATFORM 4 TO UNION STATION	LAUS_PLATFORM7_AS-BUILTS	RELOCATE
2022	ELECTRICAL	8-3"	PLATFORM 4 TO UNION STATION	LAUS_PLATFORM7_AS-BUILTS	RELOCATE
2023	ELECTRICAL	4-3" 3-2" 2-.25"	ALONG PASSAGEWAY	LAUS_PLATFORM7_AS-BUILTS	RELOCATE
2024	ELECTRICAL	UNKNOWN	TRACK 4	LAUS_PLATFORM7_AS-BUILTS	RELOCATE
2025	ELECTRICAL	UNKNOWN	SOUTH OF PASSAGEWAY ACROSS TRACKS	LAUS_PLATFORM7_AS-BUILTS	RELOCATE
2026	ELECTRICAL	UNKNOWN	SOUTH OF CESAR CHAVEZ AVE	LAUS_PLATFORM7_AS-BUILTS	RELOCATE
2027	ELECTRICAL	UNKNOWN	SOUTH OF CESAR CHAVEZ AVE	LAUS_PLATFORM7_AS-BUILTS	RELOCATE
2028	ELECTRICAL	2'X2'X4"	ALONG REAR UNION STATION PARKING	LAUS_PLATFORM7_AS-BUILTS	RELOCATE
2029	ELECTRICAL	2'X2'X4"	ALONG REAR UNION STATION PARKING	LAUS_PLATFORM7_AS-BUILTS	RELOCATE
2030	ELECTRICAL	2'X2'X4"	ALONG REAR UNION STATION PARKING	LAUS_PLATFORM7_AS-BUILTS	RELOCATE
2031	ELECTRICAL	2'X2'X4"	ALONG REAR UNION STATION PARKING	LAUS_PLATFORM7_AS-BUILTS	RELOCATE
2032	ELECTRICAL	1'X8"X10"	NORTH OF EL MONTE BUSWAY	LAUS_PLATFORM7_AS-BUILTS	RELOCATE
2033	ELECTRICAL	1'X8"X10"	NORTH OF EL MONTE BUSWAY	LAUS_PLATFORM7_AS-BUILTS	RELOCATE
2034	ELECTRICAL	1.5"X1'	TRACK 8	LAUS_PLATFORM7_AS-BUILTS	RELOCATE
2035	ELECTRICAL	2'X1'	TRACK 7	LAUS_PLATFORM7_AS-BUILTS	RELOCATE
2036	ELECTRICAL	2'X1'	TRACK 7	LAUS_PLATFORM7_AS-BUILTS	RELOCATE
2037	ELECTRICAL	UNKNOWN	TRACK 8	LAUS_PLATFORM7_AS-BUILTS	RELOCATE
2038	ELECTRICAL	UNKNOWN	TRACK 8	LAUS_PLATFORM7_AS-BUILTS	RELOCATE
2039	ELECTRICAL	UNKNOWN	TRACK 8	LAUS_PLATFORM7_AS-BUILTS	RELOCATE
2040	ELECTRICAL	5-3"	ALONG PASSAGEWAY	LAUS_PLATFORM7_AS-BUILTS	RELOCATE

ID	UTILITY TYPE	SIZE	UTILITY LOCATION	AS-BUILT	DISPOSITION
2041	ELECTRICAL	UNKNOWN	SOUTH OF CESAR CHAVEZ AVE	SCRTD METRO RAIL PROJECT CONTRACT NO. A135	RELOCATE
2042	ELECTRICAL	UNKNOWN	GARDEN TRACK TO EL MONTE BUSWAY	SCRTD METRO RAIL PROJECT CONTRACT NO. A135	RELOCATE
2043	GAS	UNKNOWN	101 FREEWAY	LAUS_PLATFORM7_AS-BUILTS	REMOVE
2044	CABLE	2'X2'X4"	SOUTH OF CESAR CHAVEZ AVE	LAUS_PLATFORM7_AS-BUILTS	RELOCATE
2045	CABLE	2'X2'X4"	ALONG REAR UNION STATION PARKING	LAUS_PLATFORM7_AS-BUILTS	RELOCATE
2046	CABLE	2'X2'X4"	ALONG REAR UNION STATION PARKING	LAUS_PLATFORM7_AS-BUILTS	RELOCATE
2047	CABLE	UNKNOWN	101 FREEWAY	LAUS_PLATFORM7_AS-BUILTS	RELOCATE
2048	CABLE	UNKNOWN	SOUTH OF PASSAGEWAY	LAUS_PLATFORM7_AS-BUILTS	RELOCATE
2049	STORM DRAIN	UNKNOWN	WEST OF METRO GATEWAY	LAUS_PLATFORM7_AS-BUILTS	REMOVE
2050	STORM DRAIN	30"	NORTH OF PASSAGEWAY	LAUS_PLATFORM7_AS-BUILTS	REMOVE
2051	STORM DRAIN	30"	EAST PORTAL TO FREEWAY	LAUS_PLATFORM7_AS-BUILTS	REMOVE
2052	STORM DRAIN	30"	SOUTH OF PASSAGEWAY	LAUS_PLATFORM7_AS-BUILTS	REMOVE
2053	STORM DRAIN	UNKNOWN	PLATFORM 7	LAUS_PLATFORM7_AS-BUILTS	REMOVE
2054	STORM DRAIN	UNKNOWN	PLATFORM 7	LAUS_PLATFORM7_AS-BUILTS	REMOVE
2055	STORM DRAIN	UNKNOWN	WEST OF ACCESS ROAD	LAUS_PLATFORM7_AS-BUILTS	REMOVE
2056	STORM DRAIN	UNKNOWN	ALONG CESAR CHAVEZ AVE	D-3804, D-3647, D-3648, LA000167470	REMOVE
2057	STORM DRAIN	UNKNOWN	WEST OF METRO GATEWAY	LAUS_PLATFORM7_AS-BUILTS	REMOVE
2058	STORM DRAIN	UNKNOWN	NORTH WEST OF EAST PORTAL	LAUS_PLATFORM7_AS-BUILTS	REMOVE
2059	STORM DRAIN	UNKNOWN	SOUTH WEST OF EAST PORTAL	LAUS_PLATFORM7_AS-BUILTS	REMOVE
2060	STORM DRAIN	UNKNOWN	WEST OF EAST PORTAL	LAUS_PLATFORM7_AS-BUILTS	REMOVE
2061	SEWER	UNKNOWN	ALONG EL MONTE BUSWAY	LAUS_PLATFORM7_AS-BUILTS	REMOVE
2062	TELECOM	UNKNOWN	NORTH OF PASSAGEWAY	LAUS_PLATFORM7_AS-BUILTS	RELOCATE
2063	TELECOM	UNKNOWN	ALONG REAR UNION STATION PARKING	LAUS_PLATFORM7_AS-BUILTS	RELOCATE
2064	TELECOM	5-3" 2-2" 2-2.5"	SOUTH OF PASSAGEWAY	LAUS_PLATFORM7_AS-BUILTS	RELOCATE
2065	TELECOM	UNKNOWN	PLATFORM 3 TO 101 FREEWAY	LAUS_PLATFORM7_AS-BUILTS	RELOCATE
2066	WATER	2"	PLATFORM 2 NORTH OF PASSAGEWAY	AMTRAK LAUS RUN THRU TRACKS 35% DESIGN PLANS	RELOCATE
2067	WATER	2"	PLATFORM 2 SOUTH OF PASSAGEWAY	AMTRAK LAUS RUN THRU TRACKS 35% DESIGN PLANS	RELOCATE
2068	WATER	2"	PLATFORM 2 SOUTH OF PASSAGEWAY	AMTRAK LAUS RUN THRU TRACKS 35% DESIGN PLANS	RELOCATE
2069	WATER	2"	PLATFORM 2 SOUTH OF PASSAGEWAY	AMTRAK LAUS RUN THRU TRACKS 35% DESIGN PLANS	RELOCATE
2070	WATER	2"	PLATFORM 3 NORTH OF PASSAGEWAY	AMTRAK LAUS RUN THRU TRACKS 35% DESIGN PLANS	RELOCATE
2071	WATER	2"	PLATFORM 3 SOUTH OF PASSAGEWAY	AMTRAK LAUS RUN THRU TRACKS 35% DESIGN PLANS	RELOCATE
2072	WATER	2"	PLATFORM 3 SOUTH OF PASSAGEWAY	AMTRAK LAUS RUN THRU TRACKS 35% DESIGN PLANS	RELOCATE
2073	WATER	2"	PLATFORM 3 SOUTH OF PASSAGEWAY	AMTRAK LAUS RUN THRU TRACKS 35% DESIGN PLANS	RELOCATE
2074	WATER	2"	PLATFORM 4 NORTH OF PASSAGEWAY	AMTRAK LAUS RUN THRU TRACKS 35% DESIGN PLANS	RELOCATE
2075	WATER	2"	PLATFORM 4 SOUTH OF PASSAGEWAY	AMTRAK LAUS RUN THRU TRACKS 35% DESIGN PLANS	RELOCATE
2076	WATER	2"	PLATFORM 4 SOUTH OF PASSAGEWAY	AMTRAK LAUS RUN THRU TRACKS 35% DESIGN PLANS	RELOCATE
2077	WATER	2"	PLATFORM 4 SOUTH OF PASSAGEWAY	AMTRAK LAUS RUN THRU TRACKS 35% DESIGN PLANS	RELOCATE
2078	WATER	2"	PLATFORM 5 NORTH OF PASSAGEWAY	AMTRAK LAUS RUN THRU TRACKS 35% DESIGN PLANS	RELOCATE
2079	WATER	2"	PLATFORM 5 SOUTH OF PASSAGEWAY	AMTRAK LAUS RUN THRU TRACKS 35% DESIGN PLANS	RELOCATE
2080	WATER	2"	PLATFORM 5 SOUTH OF PASSAGEWAY	AMTRAK LAUS RUN THRU TRACKS 35% DESIGN PLANS	RELOCATE

ID	UTILITY TYPE	SIZE	UTILITY LOCATION	AS-BUILT	DISPOSITION
2081	WATER	2"	PLATFORM 5 SOUTH OF PASSAGEWAY	AMTRAK LAUS RUN THRU TRACKS 35% DESIGN PLANS	RELOCATE
2082	WATER	2"	PLATFORM 6 NORTH OF PASSAGEWAY	AMTRAK LAUS RUN THRU TRACKS 35% DESIGN PLANS	RELOCATE
2083	WATER	2"	PLATFORM 6 SOUTH OF PASSAGEWAY	AMTRAK LAUS RUN THRU TRACKS 35% DESIGN PLANS	RELOCATE
2084	WATER	2"	PLATFORM 6 SOUTH OF PASSAGEWAY	AMTRAK LAUS RUN THRU TRACKS 35% DESIGN PLANS	RELOCATE
2085	WATER	2"	PLATFORM 6 SOUTH OF PASSAGEWAY	AMTRAK LAUS RUN THRU TRACKS 35% DESIGN PLANS	RELOCATE
2086	WATER	2"	PLATFORM 7 NORTH OF PASSAGEWAY	AMTRAK LAUS RUN THRU TRACKS 35% DESIGN PLANS	RELOCATE
2087	WATER	2"	PLATFORM 7 SOUTH OF PASSAGEWAY	AMTRAK LAUS RUN THRU TRACKS 35% DESIGN PLANS	RELOCATE
2088	WATER	2"	PLATFORM 7 SOUTH OF PASSAGEWAY	AMTRAK LAUS RUN THRU TRACKS 35% DESIGN PLANS	RELOCATE
2089	WATER	2"	SOUTH OF EAST PORTAL	LAUS_PLATFORM7_AS-BUILTS	RELOCATE
2090	WATER	20"	SOUTH ACCESS ROAD	LAUS_PLATFORM7_AS-BUILTS	RELOCATE
2091	WATER	UNKNOWN	METRO WATER DISTRICT TO 101 FREEWAY	LAUS_PLATFORM7_AS-BUILTS	RELOCATE
2092	WATER	UNKNOWN	NORTH OF EAST PORTAL	LAUS_PLATFORM7_AS-BUILTS	RELOCATE
2093	WATER	UNKNOWN	PLATFORM 7 NORTH OF PASSAGEWAY	LAUS_PLATFORM7_AS-BUILTS	RELOCATE
2094	WATER	2"	PLATFORM 6 SOUTH OF PASSAGEWAY	LAUS_PLATFORM7_AS-BUILTS	RELOCATE
2095	WATER	UNKNOWN	PLATFORM 7 NORTH OF PASSAGEWAY	LAUS_PLATFORM7_AS-BUILTS	RELOCATE
2096	WATER	UNKNOWN	PLATFORM 7 NORTH OF PASSAGEWAY	LAUS_PLATFORM7_AS-BUILTS	RELOCATE
2097	ELECTRICAL	UNKNOWN	SOUTH OF PASSAGEWAY	AMTRAK LAUS RUN THRU TRACKS 35% DESIGN PLANS	RELOCATE
2098	ELECTRICAL	UNKNOWN	ALONG REAR UNION STATION PARKING	AMTRAK LAUS RUN THRU TRACKS 35% DESIGN PLANS	RELOCATE
2099	ELECTRICAL	UNKNOWN	EAST OF BAGGAGE HANDLING BUILDING	AMTRAK LAUS RUN THRU TRACKS 35% DESIGN PLANS	RELOCATE
2100	ELECTRICAL	UNKNOWN	REAR UNION STATION PARKING	PASADENA BLUE LINE 6490 E-041	RELOCATE
2101	ELECTRICAL	UNKNOWN	REAR UNION STATION PARKING	PASADENA BLUE LINE 6490 E-041	RELOCATE
2102	OIL	UNKNOWN	REAR UNION STATION PARKING	PASADENA BLUE LINE 6490 E-041	REMOVE
2103	FIBER OPTICS	UNKNOWN	EAST OF BAGGAGE HANDLING BUILDING	PASADENA GOLD LINE FIBER OPTIC INTERFACE AT METRO RED LINE CONTRACT NUMBER C0699	RELOCATE
2104	ELECTRICAL	2-4"	EAST OF BAGGAGE HANDLING BUILDING	Pasadena Gold Line fiber optic Interface at Metro Red Line Contract Number C0699	RELOCATE
2105	ELECTRICAL	UNKNOWN	EAST OF BAGGAGE HANDLING BUILDING	ADJUSTED PER AIRX SURVEY: 2017-08-11	RELOCATE
2106	ELECTRICAL	UNKNOWN	SOUTH ACCESS ROAD	ADJUSTED PER AIRX SURVEY: 2017-08-11	RELOCATE
2107	FIBER OPTICS	4-4"	FIRE LANE EAST OF PLATFORM 7	LAUS_Platform7_As-Builts (EP-01 to EP-04) Adjusted per AirX Survey: 2017-08-11	RELOCATE
2108	WATER	UNKNOWN	ROADWAY SOUTH OF MOSAIC APTS	SITE IMPROVEMENTS 2003 - SURVEY	RELOCATE
2109	WATER	UNKNOWN	FIRE LANE EAST OF PLATFORM 7	ADJUSTED PER AIRX SURVEY: 2017-08-11	RELOCATE

CONCEPTUAL DESIGN SUBMITTAL
NOT FOR CONSTRUCTION

THE PREPARATION OF THIS DRAWING HAS BEEN FINANCED IN PART THROUGH A GRANT FROM THE U.S. DEPARTMENT OF TRANSPORTATION, FEDERAL TRANSIT ADMINISTRATION (FTA), UNDER THE FEDERAL TRANSIT ACT OF 1964, AS AMENDED, AND IN PART BY THE TAXES OF THE CITIZENS OF LOS ANGELES COUNTY AND OF THE STATE OF CALIFORNIA.

REV	DATE	BY	APP	REG NO	EXPIRES	SEAL HOLDER	DESCRIPTION

DESIGNED BY A.SO
DRAWN BY A.SO
CHECKED BY R.IBARRA
IN CHARGE T.KIM
DATE 7/13/2021

REGISTERED PROFESSIONAL ENGINEER — First Name Last Name — No. C XXXXX — Exp. XX/XX/XX — CIVIL — STATE OF CALIFORNIA

Metro
LOS ANGELES COUNTY
METROPOLITAN TRANSPORTATION AUTHORITY
w2 design
50 SOUTH DELACEY AVENUE, SUITE 100
PASADENA, CALIFORNIA 91105
PHONE: (626) 683-1537
EMAIL: INFO@W2DESIGNINC.COM
HDR ENGINEERING
350 S. GRAND AVENUE
SUITE 2600
LOS ANGELES, CA 90071
(213) 239-0800

SUBMITTED: _____ PROJECT MANAGER
APPROVED: _____

LINK UNION STATION PROJECT
CIVIL DRAWINGS
STATION EXISTING UTILITY TABLE - 2

CONTRACT NO
DRAWING NO CU-215
REV --
SCALE 1" = 40'
SHEET NO 52 of 72

GENERAL NOTES:

1. SEE DRAWING C-001 FOR NOTES & G1-002 FOR KEY MAP.
2. SEE DRAWINGS CU-211 TO CU-213 FOR EXISTING UTILITIES.
3. SEE DRAWINGS CG-231 TO CG-233 FOR STORM DRAIN & NON-POTABLE WATER NOTES & LAYOUT.
4. IMPACTED EXISTING UTILITIES PER GENERAL NOTE 2 SHOWN EXISTING ON THIS PLAN WILL BE RELOCATED. ACTUAL RELOCATION TO BE DETERMINED.

(F#) CONSTRUCTION NOTES - FIRE:

1. CONSTRUCT FIRE WATER LINE.
2. CONSTRUCT FIRE HYDRANT.
3. CONSTRUCT STAND PIPE..
4. CONSTRUCT GATE VALVE.
5. CONSTRUCT BACKFLOW PREVENTER.
6. OFFSITE WATER METER.
7. OFFSITE LATERAL.
8. FIRE LINE INSIDE CONCOURSE. SEE PLUMBING PLANS.

(W#) CONSTRUCTION NOTES - DOMESTIC:

1. CONSTRUCT DOMESTIC WATER LINE.
2. CONSTRUCT BACKFLOW PREVENTER.
3. OFFSITE WATER METER.
4. OFFSITE LATERAL.
5. CONNECT TO MECHANICAL SKID - SEE GENERAL NOTE 3 HEREON.
6. DOMESTIC WATER LINE INSIDE CONCOURSE. SEE PLUMBING PLANS.

(S#) CONSTRUCTION NOTES - SEWER:

1. CONSTRUCT SANITARY SEWER LINE.
2. CONSTRUCT INDUSTRIAL SEWER LINE.
3. CONSTRUCT GREASE INTERCEPTOR.
4. CONSTRUCT MANHOLE.
5. CONNECT TO EXISTING MANHOLE.
6. SEWER POINT OF CONNECTION.
7. CONSTRUCT SEWER CLEANOUT.

(G#) CONSTRUCTION NOTES - GAS:

1. CONSTRUCT GAS LINE. SEE PLUMBING PLANS FOR DETAILS.
2. CONSTRUCT GAS METER.
3. CONNECT TO EXISTING GAS LINE.

LEGEND

LAUS FIRE ACCESS ROAD

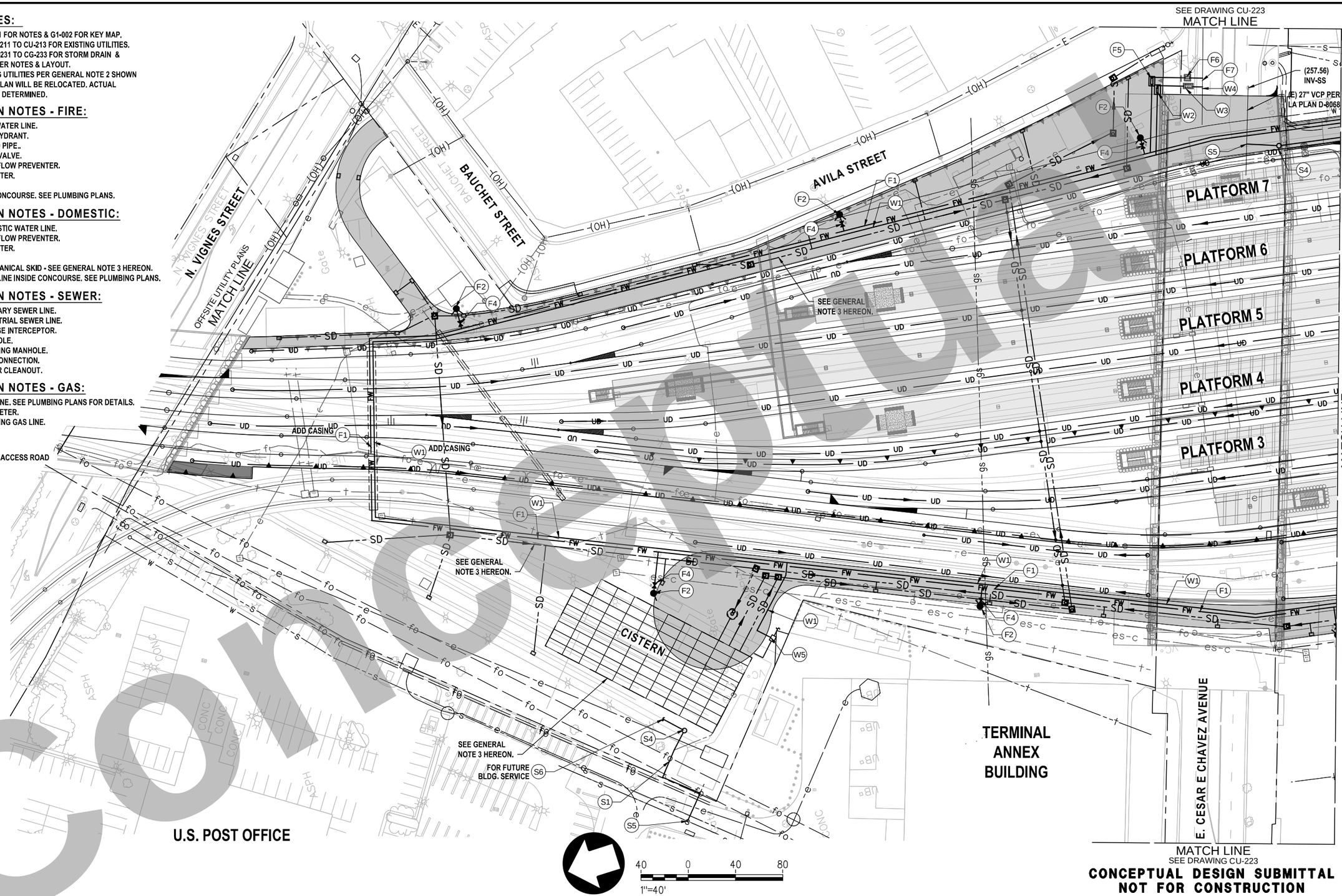

CONCEPTUAL DESIGN SUBMITTAL NOT FOR CONSTRUCTION

Concept

THE PREPARATION OF THIS DRAWING HAS BEEN FINANCED IN PART THROUGH A GRANT FROM THE U.S. DEPARTMENT OF TRANSPORTATION, FEDERAL TRANSIT ADMINISTRATION (FTA), UNDER THE FEDERAL TRANSIT ACT OF 1964, AS AMENDED, AND IN PART BY THE TAXES OF THE CITIZENS OF LOS ANGELES COUNTY AND OF THE STATE OF CALIFORNIA.

REV	DATE	BY	APP	REG NO	EXPIRES	SEAL HOLDER	DESCRIPTION

DESIGNED BY	E.GUTIERREZ
DRAWN BY	E.GUTIERREZ
CHECKED BY	R.IBARRA
IN CHARGE	T.KIM
DATE	7/13/2021

LOS ANGELES COUNTY
METROPOLITAN TRANSPORTATION AUTHORITY

HDR ENGINEERING
350 S. GRAND AVENUE
SUITE 2600
LOS ANGELES, CA 90071
(213) 239-5800

SUBMITTED: _____ PROJECT MANAGER

APPROVED: _____

LINK UNION STATION PROJECT
CIVIL DRAWINGS
STATION PROPOSED UTILITY PLAN - 1

CONTRACT NO	
DRAWING NO	CU-221
REV	--
SCALE	1" = 40'
SHEET NO	53 of 72

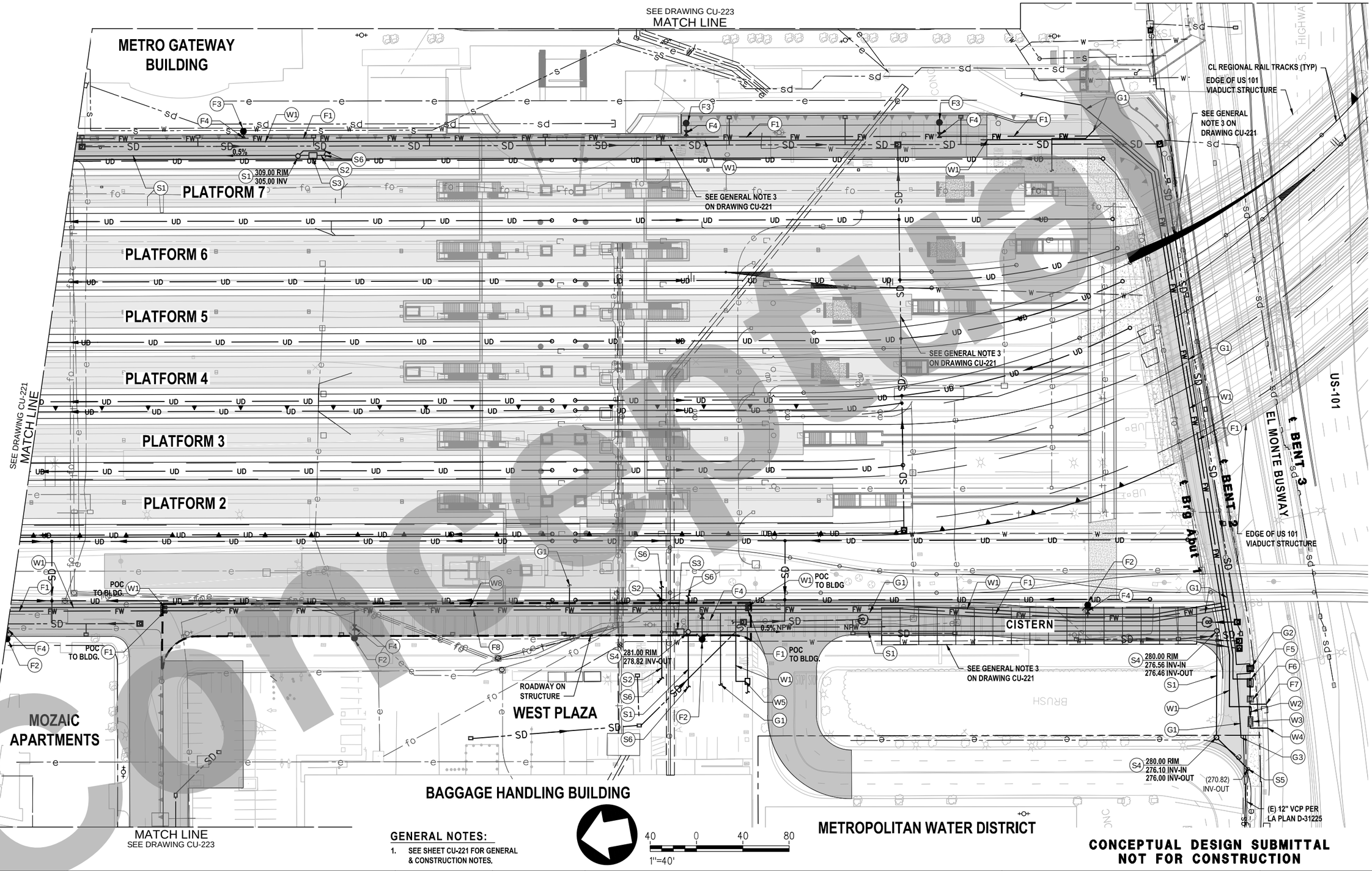

GENERAL NOTES:

1. SEE SHEET CU-221 FOR GENERAL & CONSTRUCTION NOTES.

40 0 40 80

1"=40'

CONCEPTUAL DESIGN SUBMITTAL NOT FOR CONSTRUCTION

Concept

THE PREPARATION OF THIS DRAWING HAS BEEN FINANCED IN PART THROUGH A GRANT FROM THE U.S. DEPARTMENT OF TRANSPORTATION, FEDERAL TRANSIT ADMINISTRATION (FTA), UNDER THE FEDERAL TRANSIT ACT OF 1964, AS AMENDED, AND IN PART BY THE TAXES OF THE CITIZENS OF LOS ANGELES COUNTY AND OF THE STATE OF CALIFORNIA.

REV	DATE	BY	APP	REG NO	EXPIRES	SEAL HOLDER	DESCRIPTION

DESIGNED BY E.GUTIERREZ
DRAWN BY E.GUTIERREZ
CHECKED BY R.IBARRA
IN CHARGE T.KIM
DATE 7/13/2021

Metro
LOS ANGELES COUNTY
METROPOLITAN TRANSPORTATION AUTHORITY

HDR ENGINEERING
350 S. GRAND AVENUE
SUITE 2900
LOS ANGELES, CA 90071
(213) 239-5800

SUBMITTED: _____ PROJECT MANAGER

APPROVED: _____

LINK UNION STATION PROJECT
CIVIL DRAWINGS
STATION PROPOSED UTILITY PLAN - 2

CONTRACT NO
DRAWING NO CU-222
REV --
SCALE 1" = 40'

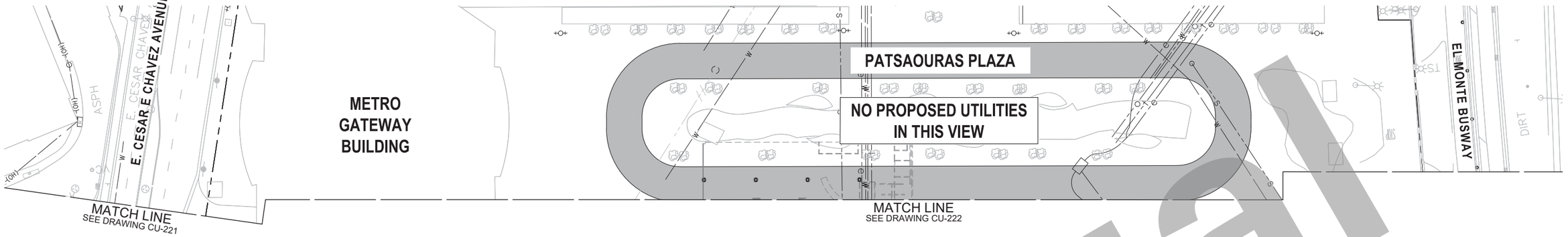

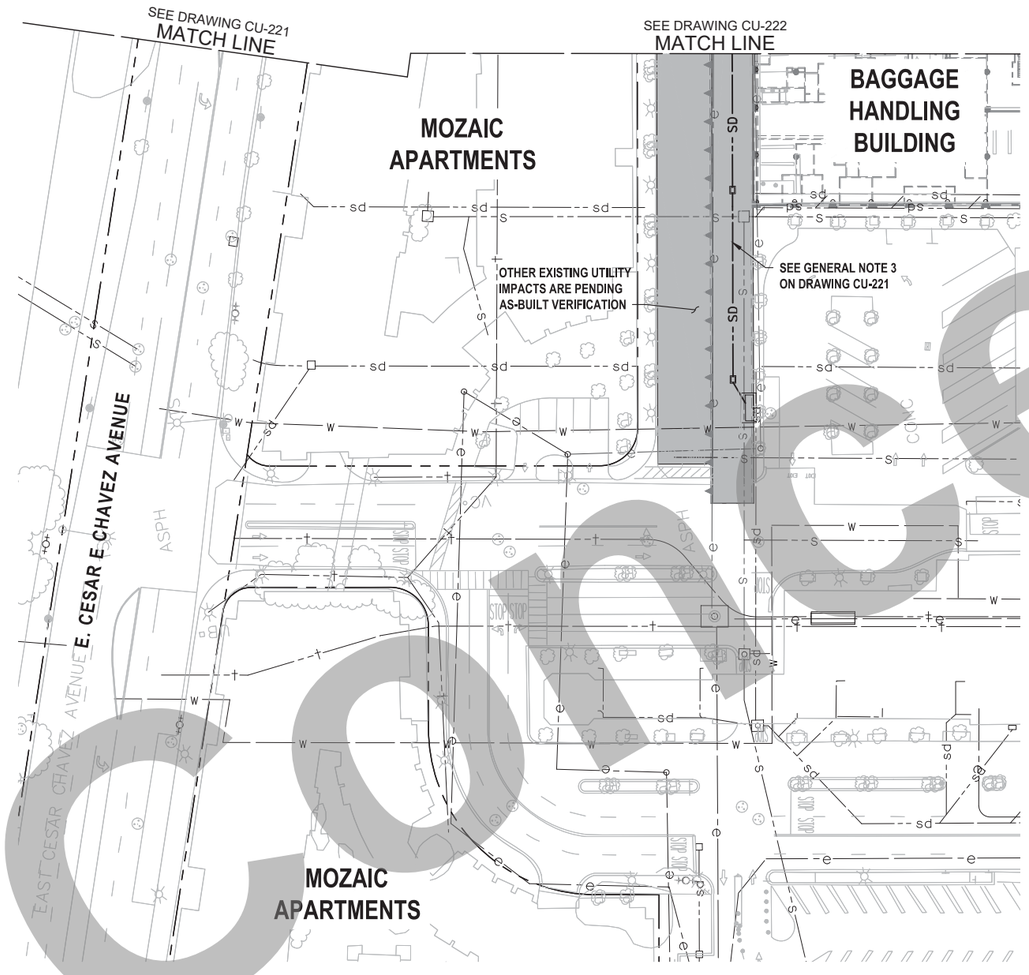

GENERAL NOTES:

1. SEE SHEET CU-221 FOR GENERAL & CONSTRUCTION NOTES.

40 0 40 80
1"=40'

CONCEPTUAL DESIGN SUBMITTAL
NOT FOR CONSTRUCTION

THE PREPARATION OF THIS DRAWING HAS BEEN FINANCED IN PART THROUGH A GRANT FROM THE U.S. DEPARTMENT OF TRANSPORTATION, FEDERAL TRANSIT ADMINISTRATION (FTA), UNDER THE FEDERAL TRANSIT ACT OF 1964, AS AMENDED, AND IN PART BY THE TAXES OF THE CITIZENS OF LOS ANGELES COUNTY AND OF THE STATE OF CALIFORNIA.

REV	DATE	BY	APP	REG NO	EXPIRES	SEAL HOLDER	DESCRIPTION

DESIGNED BY E.GUTIERREZ
DRAWN BY E.GUTIERREZ
CHECKED BY R.IBARRA
IN CHARGE T.KIM
DATE 7/13/2021

Metro
LOS ANGELES COUNTY
METROPOLITAN TRANSPORTATION AUTHORITY

w2 design
50 SOUTH DELACEY AVENUE, SUITE 100
PASADENA, CALIFORNIA 91105
T (626) 356-3553 | F (626) 765-1437
EMAIL: INFO@W2DESIGNINC.COM

HDR ENGINEERING
350 S. GRAND AVENUE
SUITE 2500
LOS ANGELES, CA 90071
(213) 239-5800

SUBMITTED: _____ PROJECT MANAGER
APPROVED: _____

LINK UNION STATION PROJECT
CIVIL DRAWINGS
STATION PROPOSED UTILITY PLAN - 3

CONTRACT NO
DRAWING NO CU-223
REV --
SCALE 1" = 40'
SHEET NO 55 of 72

Conceptual

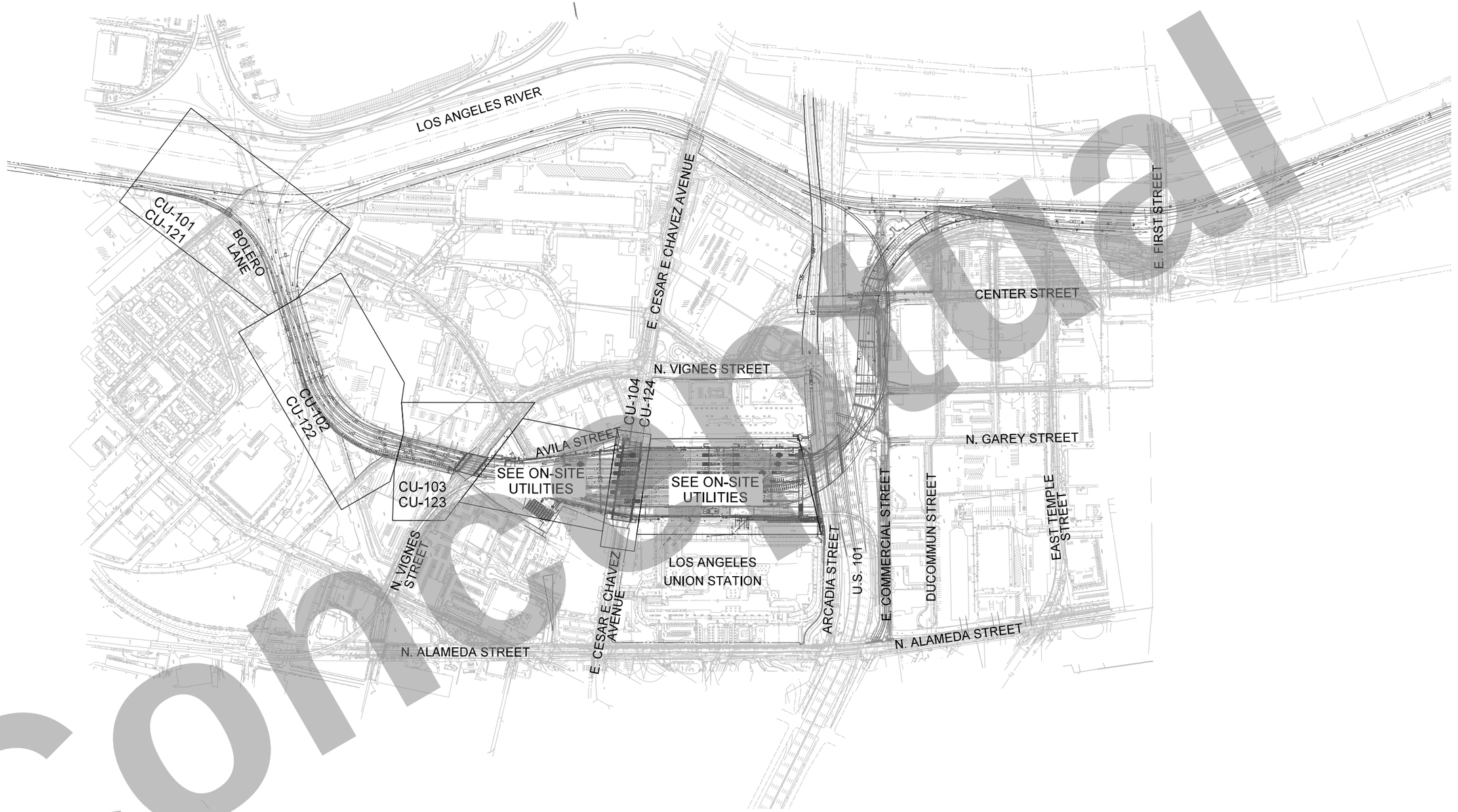

Conceptual

AML ACNRS C EL S GRR
LMR MP AML RPSARGML

THE PREPARATION OF THIS DRAWING HAS BEEN FINANCED IN PART THROUGH A GRANT FROM THE U.S. DEPARTMENT OF TRANSPORTATION, FEDERAL TRANSIT ADMINISTRATION (FTA), UNDER THE FEDERAL TRANSIT ACT OF 1964, AS AMENDED, AND IN PART BY THE TAXES OF THE CITIZENS OF LOS ANGELES COUNTY AND OF THE STATE OF CALIFORNIA.

REV	DATE	BY	APP	REG NO	EXPIRES	SEAL HOLDER	DESCRIPTION

DESIGNED BY M.AGUILAR
DRAWN BY M.AGUILAR
CHECKED BY I.ALTARES
IN CHARGE T.KIM
DATE 7/13/2021

REGISTERED PROFESSIONAL ENGINEER — No. Exp. CIVIL — STATE OF CALIFORNIA

Metro
LOS ANGELES COUNTY
METROPOLITAN TRANSPORTATION AUTHORITY

BA INC — TRUE ENGINEERING EXCELLENCE

HDR ENGINEERING
350 S. GRAND AVENUE
SUITE 2200
LOS ANGELES, CA 90071
(213) 239-5800

SUBMITTED: _____ PROJECT MANAGER

APPROVED: _____

LINK UNION STATION PROJECT
OFFSITE - UTILITIES
KEY MAP

CONTRACT NO
DRAWING NO UG-102 REV
SCALE 1"=300'
SHEET NO 56 of 72

Plot Driver=$PLTDRV$$ Pentable=PlotStamp.tbl USER = mshahin 10:35:14 AM 6/9/2020 $FILE$

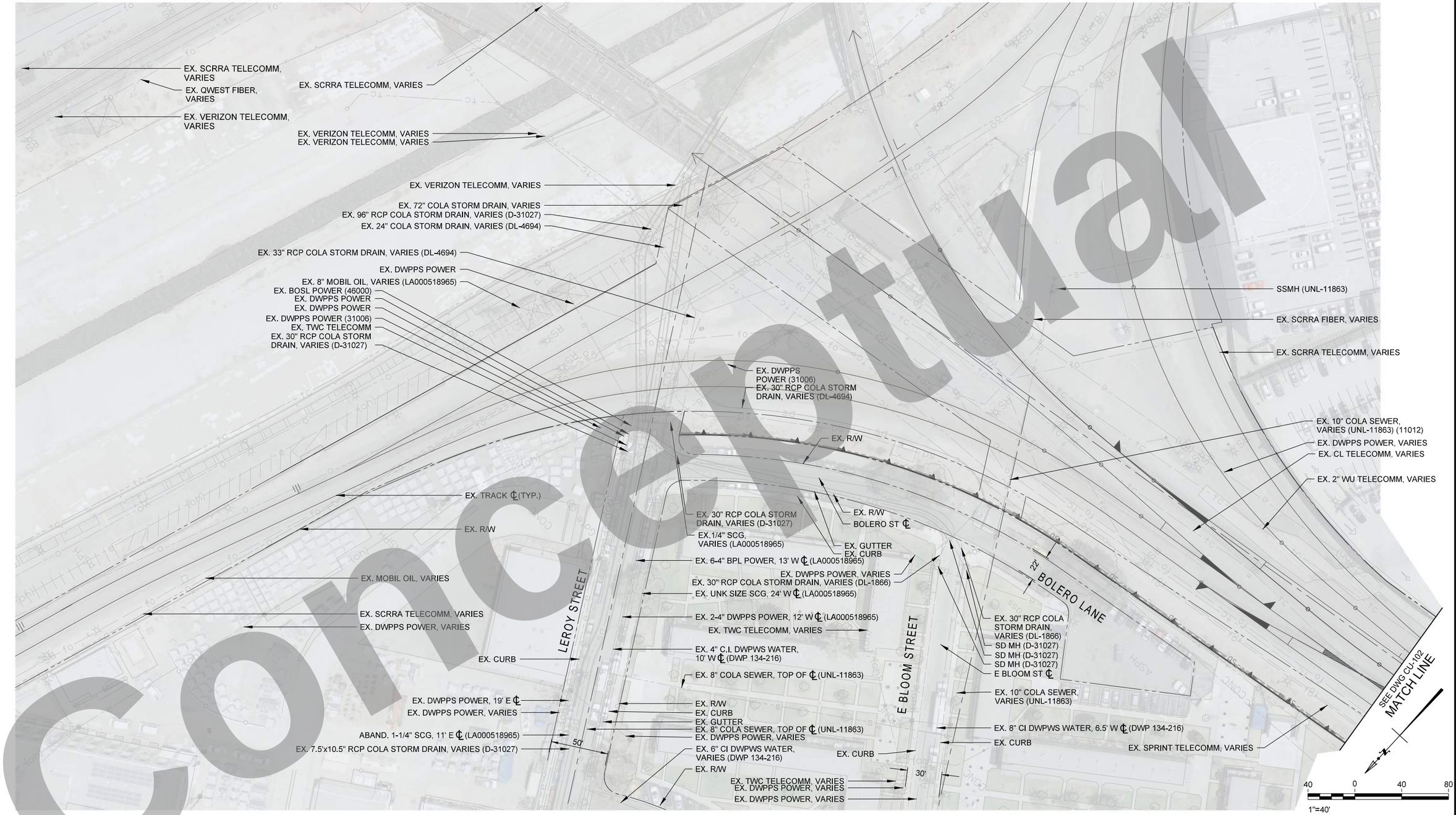

AMLACNRS C GEL S GRR
LMR MP AML RPSARGML

Conceptual

THE PREPARATION OF THIS DRAWING HAS BEEN FINANCED IN PART THROUGH A GRANT FROM THE U.S. DEPARTMENT OF TRANSPORTATION, FEDERAL TRANSIT ADMINISTRATION (FTA), UNDER THE FEDERAL TRANSIT ACT OF 1964, AS AMENDED, AND IN PART BY THE TAXES OF THE CITIZENS OF LOS ANGELES COUNTY AND OF THE STATE OF CALIFORNIA.

REV	DATE	BY	APP	REG NO	EXPIRES	SEAL HOLDER	DESCRIPTION

DESIGNED BY M.AGUILAR
DRAWN BY M.AGUILAR
CHECKED BY I.ALTARES
IN CHARGE T.KIM
DATE 7/13/2021

REGISTERED PROFESSIONAL ENGINEER No. Exp. CIVIL STATE OF CALIFORNIA

Metro
LOS ANGELES COUNTY METROPOLITAN TRANSPORTATION AUTHORITY

BA INC TRUE ENGINEERING EXCELLENCE

HDR ENGINEERING 350 S. GRAND AVENUE SUITE 2900 LOS ANGELES, CA 90071 (213) 239-5800

SUBMITTED: PROJECT MANAGER
APPROVED:

LINK UNION STATION PROJECT
COMPOSITE UTILITY PLANS
SHEET 1 OF 8

CONTRACT NO
DRAWING NO CU-101
REV
SCALE 1"=40'
SHEET NO 57 of 72

Plot Driver=$PLTDRVS$ Pentable=PlotStamp.tbl USER = mshahin 10:35:44 AM 6/9/2020 $FILE$

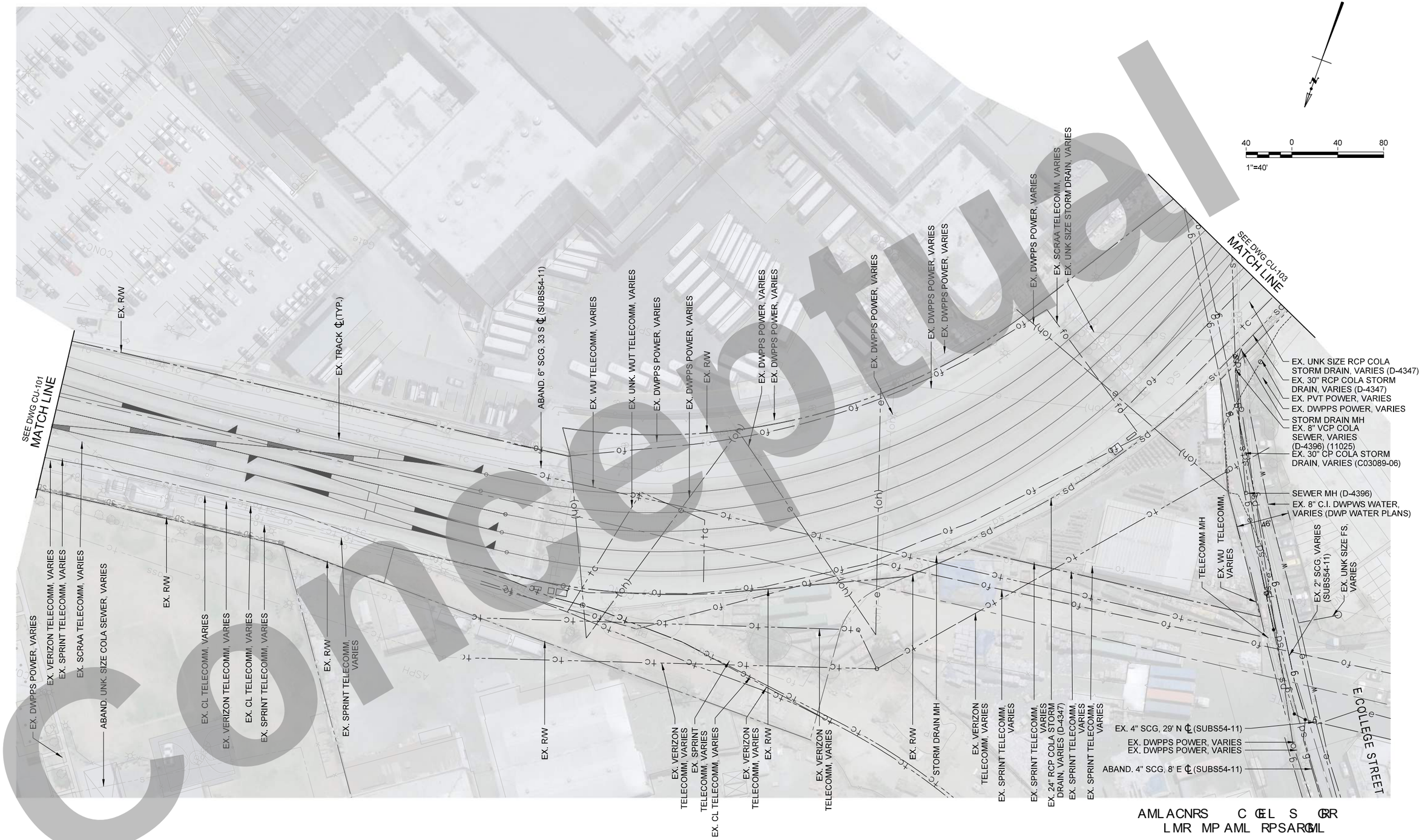

Conceptual

AMLACNRS C GEL S GRR
LMR MP AML RPSARGML

THE PREPARATION OF THIS DRAWING HAS BEEN FINANCED IN PART THROUGH A GRANT FROM THE U.S. DEPARTMENT OF TRANSPORTATION, FEDERAL TRANSIT ADMINISTRATION (FTA), UNDER THE FEDERAL TRANSIT ACT OF 1964, AS AMENDED, AND IN PART BY THE TAXES OF THE CITIZENS OF LOS ANGELES COUNTY AND OF THE STATE OF CALIFORNIA.

REV	DATE	BY	APP	REG NO	EXPIRES	SEAL HOLDER	DESCRIPTION

DESIGNED BY M.AGUILAR
DRAWN BY M.AGUILAR
CHECKED BY I.ALTARES
IN CHARGE T.KIM
DATE 7/13/2021

REGISTERED PROFESSIONAL ENGINEER No. Exp. CIVIL STATE OF CALIFORNIA

Metro
LOS ANGELES COUNTY METROPOLITAN TRANSPORTATION AUTHORITY

BA INC TRUE ENGINEERING EXCELLENCE

HDR ENGINEERING
350 S. GRAND AVENUE SUITE 2900 LOS ANGELES, CA 90071 (213) 239-5800

SUBMITTED: PROJECT MANAGER
APPROVED:

LINK UNION STATION PROJECT
COMPOSITE UTILITY PLANS
SHEET 2 OF 8

CONTRACT NO
DRAWING NO CU-102
REV
SCALE 1"=40'
SHEET NO 58 of 72

Plot Driver=$PLTDRVS$ Pentable=PlotStamp.tbl USER = mshahin 10:36:09 AM 6/9/2020 $FILE$

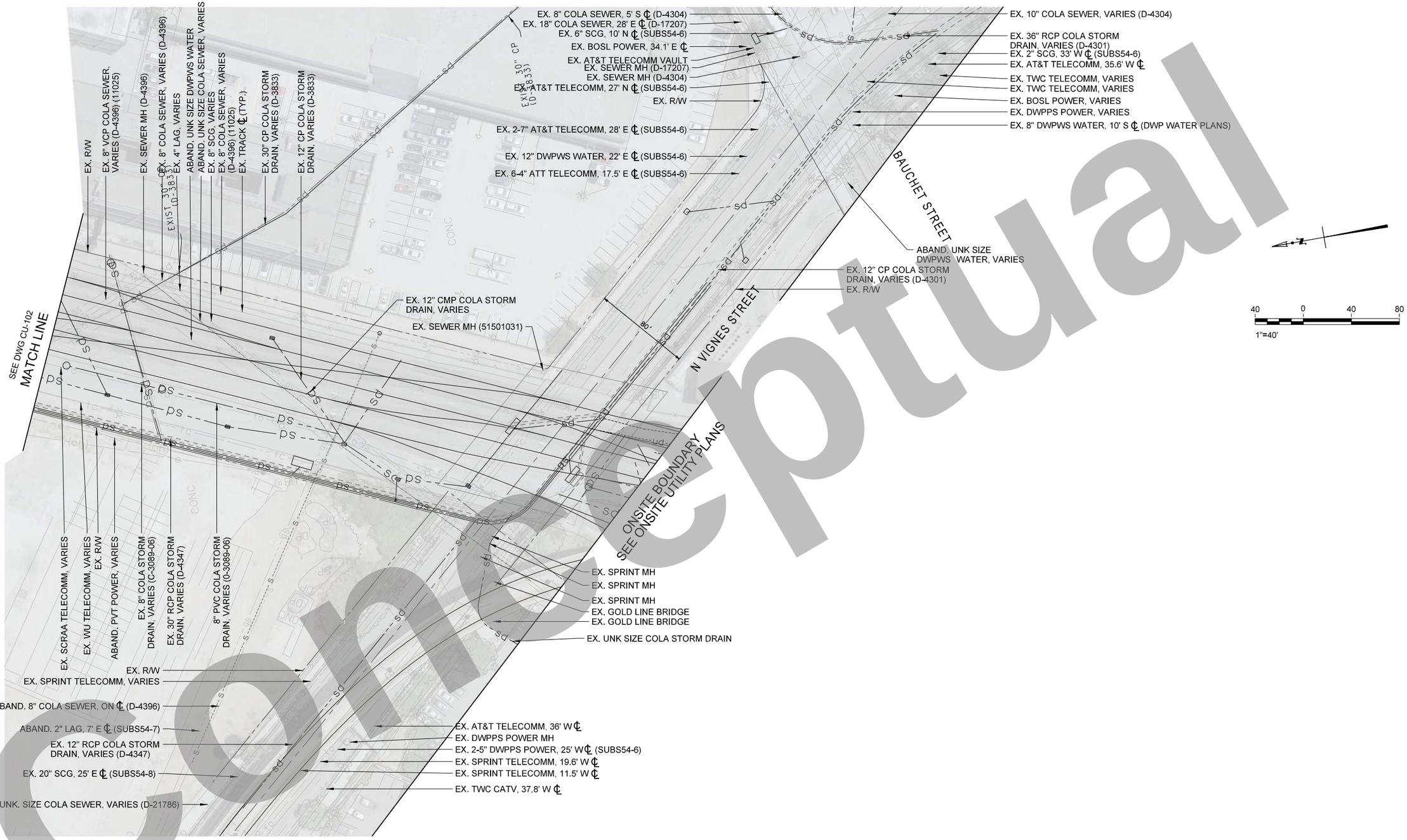

Conceptual

AML ACNRS C GEL S GRR
LMR MP AML RPSARGML

THE PREPARATION OF THIS DRAWING HAS BEEN FINANCED IN PART THROUGH A GRANT FROM THE U.S. DEPARTMENT OF TRANSPORTATION, FEDERAL TRANSIT ADMINISTRATION (FTA), UNDER THE FEDERAL TRANSIT ACT OF 1964, AS AMENDED, AND IN PART BY THE TAXES OF THE CITIZENS OF LOS ANGELES COUNTY AND OF THE STATE OF CALIFORNIA.

REV	DATE	BY	APP	REG NO	EXPIRES	SEAL HOLDER	DESCRIPTION

DESIGNED BY M.AGUILAR
DRAWN BY M.AGUILAR
CHECKED BY I.ALTARES
IN CHARGE T.KIM
DATE 7/13/2021

REGISTERED PROFESSIONAL ENGINEER — No. — Exp. — CIVIL — STATE OF CALIFORNIA

Metro
LOS ANGELES COUNTY
METROPOLITAN TRANSPORTATION AUTHORITY

BA INC TRUE ENGINEERING EXCELLENCE

HDR
HDR ENGINEERING
350 S. GRAND AVENUE
SUITE 2500
LOS ANGELES, CA 90071
(213) 228-5800

SUBMITTED: _____ PROJECT MANAGER
APPROVED: _____

LINK UNION STATION PROJECT
COMPOSITE UTILITY PLANS
SHEET 3 OF 8

CONTRACT NO
DRAWING NO CU-103 REV
SCALE 1"=40'
SHEET NO 59 of 72

Plot Driver=$PLTDRVS$ Pentable=PlotStamp.tbl USER = mshahin 10:36:33 AM 6/9/2020 $FILE$

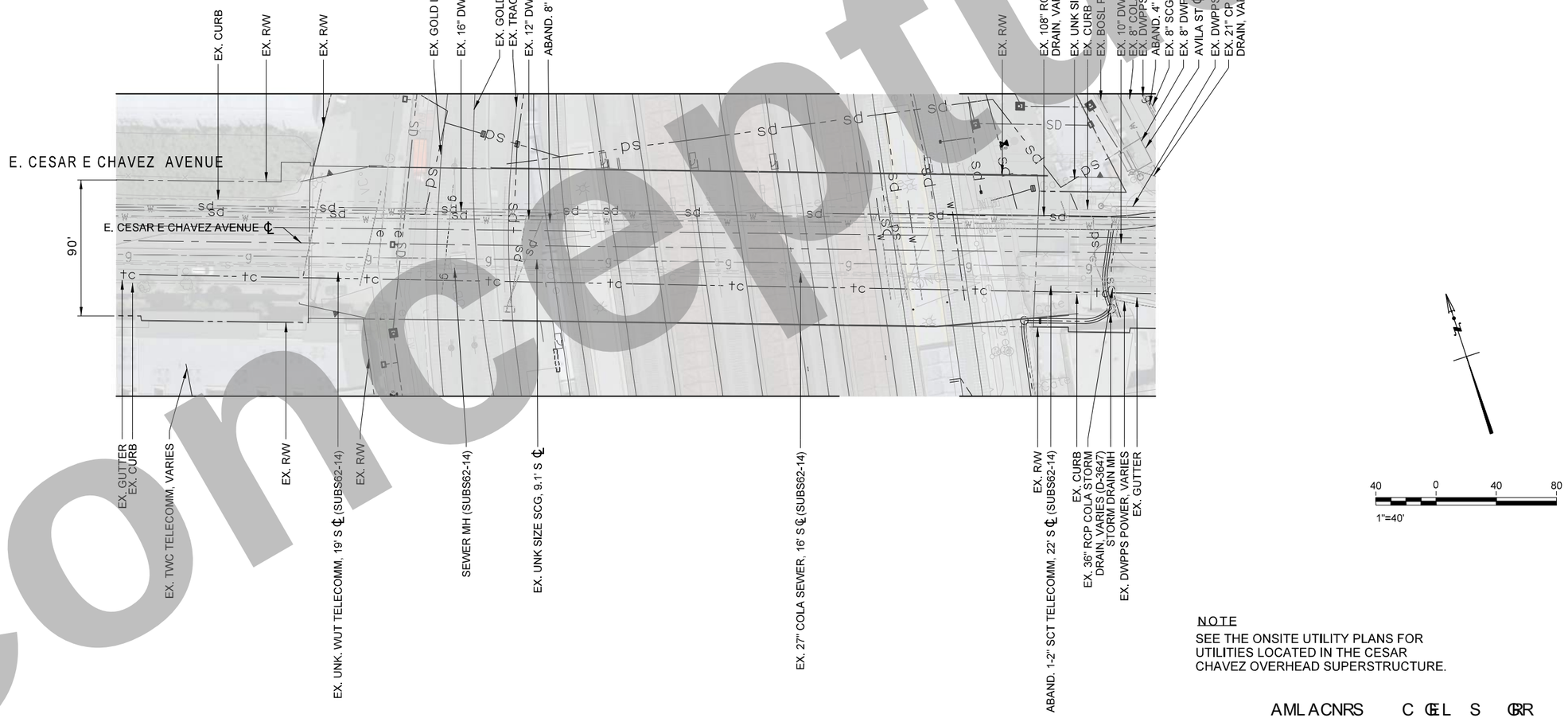

NOTE

SEE THE ONSITE UTILITY PLANS FOR UTILITIES LOCATED IN THE CESAR CHAVEZ OVERHEAD SUPERSTRUCTURE.

AML ACNRS C ℄EL S GRR
LMR MP AML RPSARGML

Concept

THE PREPARATION OF THIS DRAWING HAS BEEN FINANCED IN PART THROUGH A GRANT FROM THE U.S. DEPARTMENT OF TRANSPORTATION, FEDERAL TRANSIT ADMINISTRATION (FTA), UNDER THE FEDERAL TRANSIT ACT OF 1964, AS AMENDED, AND IN PART BY THE TAXES OF THE CITIZENS OF LOS ANGELES COUNTY AND OF THE STATE OF CALIFORNIA.

REV	DATE	BY	APP	REG NO	EXPIRES	SEAL HOLDER	DESCRIPTION

DESIGNED BY M.AGUILAR
DRAWN BY M.AGUILAR
CHECKED BY I.ALTARES
IN CHARGE T.KIM
DATE 7/13/2021

REGISTERED PROFESSIONAL ENGINEER — No. ____ Exp. ____ CIVIL — STATE OF CALIFORNIA

Metro
LOS ANGELES COUNTY
METROPOLITAN TRANSPORTATION AUTHORITY

BA INC (SBE/DBE/MBE) TRUE ENGINEERING EXCELLENCE

HDR ENGINEERING
350 S. GRAND AVENUE
SUITE 1400
LOS ANGELES, CA 90071
(213) 236-5800

SUBMITTED: _____ PROJECT MANAGER

APPROVED: _____

LINK UNION STATION PROJECT
COMPOSITE UTILITY PLANS
SHEET 4 OF 8

CONTRACT NO
DRAWING NO CU-104 REV
SCALE 1"=40'
SHEET NO 60 of 72

Plot Driver=$PLTDRV$$ Pentable=PlotStamp.tbl USER = mshahin 10:44:33 AM 6/9/2020 $FILE$

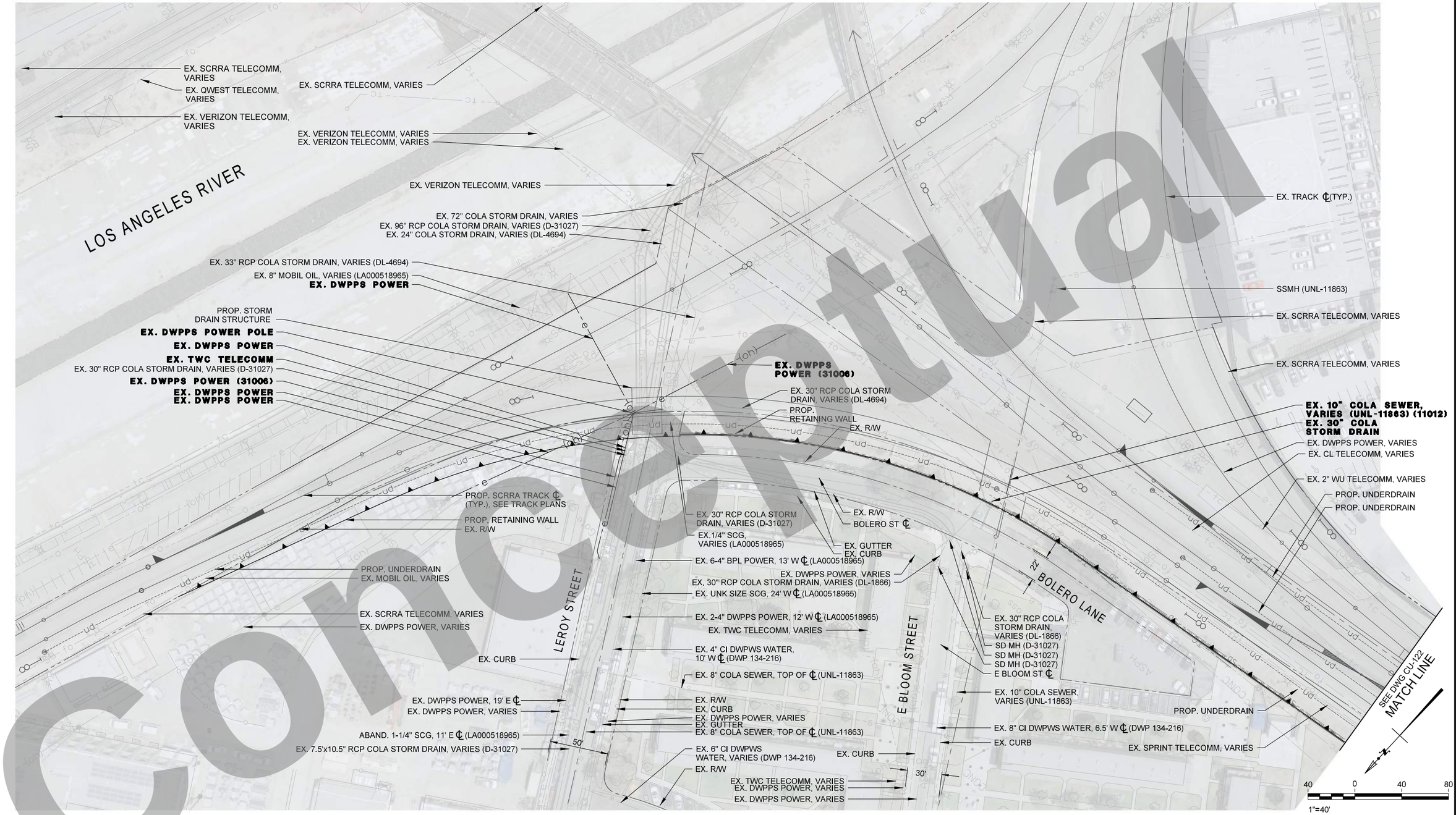

AML ACNRS C CEL S GRR
LMR MP AML RPSARGML

Concept

THE PREPARATION OF THIS DRAWING HAS BEEN FINANCED IN PART THROUGH A GRANT FROM THE U.S. DEPARTMENT OF TRANSPORTATION, FEDERAL TRANSIT ADMINISTRATION (FTA), UNDER THE FEDERAL TRANSIT ACT OF 1964, AS AMENDED, AND IN PART BY THE TAXES OF THE CITIZENS OF LOS ANGELES COUNTY AND OF THE STATE OF CALIFORNIA.

REV	DATE	BY	APP	REG NO	EXPIRES	SEAL HOLDER	DESCRIPTION

DESIGNED BY M.AGUILAR
DRAWN BY M.AGUILAR
CHECKED BY I.ALTARES
IN CHARGE T.KIM
DATE 7/13/2021

REGISTERED PROFESSIONAL ENGINEER — No. — Exp. — CIVIL — STATE OF CALIFORNIA

Metro

LOS ANGELES COUNTY
METROPOLITAN TRANSPORTATION AUTHORITY

BA INC — TRUE ENGINEERING EXCELLENCE

HDR ENGINEERING
350 S. GRAND AVENUE
SUITE 2200
LOS ANGELES, CA 90071
(213) 236-5800

SUBMITTED: _____ PROJECT MANAGER

APPROVED: _____

LINK UNION STATION PROJECT

COMPOSITE UTILITY IMPACT PLANS
SHEET 5 OF 8

CONTRACT NO

DRAWING NO CU-121 | REV

SCALE 1"=40'

SHEET NO 61 of 72

LEGEND

1) PROPOSED MAINTENANCE ACCESS ROAD

40 0 40 80

1"=40'

SEE DWG CU-121 MATCH LINE

SEE DWG CU-123 MATCH LINE

EX. R/W

PROP. UNDERDRAIN (TYP.)

SCRRA TRACK ℄ (TYP.), SEE TRACK PLANS

ABAND. 6" SCG, 33 S ℄ (SUBS54-11)

EX. WU TELECOMM, VARIES

PROP. RETAINING WALL

EX. UNK. WUT TELECOMM, VARIES

EX. DWPPS POWER, VARIES

EX. R/W

PROP. MAINTENANCE ACCESS ROAD (TYP)

EX. DWPPS POWER, VARIES

EX. SCRRA TELECOMM, VARIES

EX. UNK SIZE STORM DRAIN, VARIES

EX. UNK SIZE RCP COLA STORM DRAIN, VARIES (D-4347)

EX. 30" RCP COLA STORM DRAIN, VARIES (D-4347)

EX. PVT POWER, VARIES

EX. DWPPS POWER, VARIES

STORM DRAIN MH

EX. 8" VCP COLA SEWER, VARIES (D-4396) (11025)

EX. 30" CP COLA STORM DRAIN, VARIES (C03089-06)

SEWER MH (D-4396)

EX. 8" C.I. DWPWS WATER, VARIES (DWP WATER PLANS)

TELECOMM MH

EX. WU TELECOMM, VARIES

EX. 2" SCG, VARIES (SUBS54-11)

EX. UNK SIZE FS, VARIES

EX. DWPPS POWER, VARIES

EX. VERIZON TELECOMM, VARIES

EX. SPRINT TELECOMM, VARIES

EX. SCRRA TELECOMM, VARIES

ABAND. UNK. SIZE COLA SEWER, VARIES

EX. R/W

PROP. RETAINING WALL

EX. CL TELECOMM, VARIES

SCRRA TRACK ℄

EX. VERIZON TELECOMM, VARIES

EX. SPRINT TELECOMM, VARIES

EX. R/W

PROP. STORM DRAIN

EX. R/W

EX. VERIZON TELECOMM, VARIES

EX. SPRINT TELECOMM, VARIES

EX. CL TELECOMM, VARIES

EX. R/W

PROP. STORM DRAIN

EX. VERIZON TELECOMM, VARIES

EX. R/W

STORM DRAIN MH

EX. TRACK ℄ (TYP.)

EX. VERIZON TELECOMM, VARIES

EX. SPRINT TELECOMM, VARIES

EX. 24" RCP COLA STORM DRAIN, VARIES (D-4347)

EX. 4" SCG, 29' N ℄ (SUBS54-11)

EX. DWPPS POWER, VARIES

ABAND. 4" SCG, 8' E ℄ (SUBS54-11)

E COLLEGE STREET

AML ACNRS C CEL S GRR
LMR MP AML RPSARGML

Copy

THE PREPARATION OF THIS DRAWING HAS BEEN FINANCED IN PART THROUGH A GRANT FROM THE U.S. DEPARTMENT OF TRANSPORTATION, FEDERAL TRANSIT ADMINISTRATION (FTA), UNDER THE FEDERAL TRANSIT ACT OF 1964, AS AMENDED, AND IN PART BY THE TAXES OF THE CITIZENS OF LOS ANGELES COUNTY AND OF THE STATE OF CALIFORNIA.

REV	DATE	BY	APP	REG NO	EXPIRES	SEAL HOLDER	DESCRIPTION

DESIGNED BY M.AGUILAR
DRAWN BY M.AGUILAR
CHECKED BY I.ALTARES
IN CHARGE T.KIM
DATE 7/13/2021

REGISTERED PROFESSIONAL ENGINEER No. EXP. CIVIL STATE OF CALIFORNIA

Metro

LOS ANGELES COUNTY
METROPOLITAN TRANSPORTATION AUTHORITY

BA INC TRUE ENGINEERING EXCELLENCE

HDR ENGINEERING
350 S. GRAND AVENUE SUITE 2600
LOS ANGELES, CA 90071
(213) 236-5800

SUBMITTED: _____ PROJECT MANAGER

APPROVED: _____

LINK UNION STATION PROJECT

COMPOSITE UTILITY IMPACT PLANS
SHEET 6 OF 8

CONTRACT NO

DRAWING NO CU-122 REV

SCALE 1"=40'

SHEET NO 62 of 72

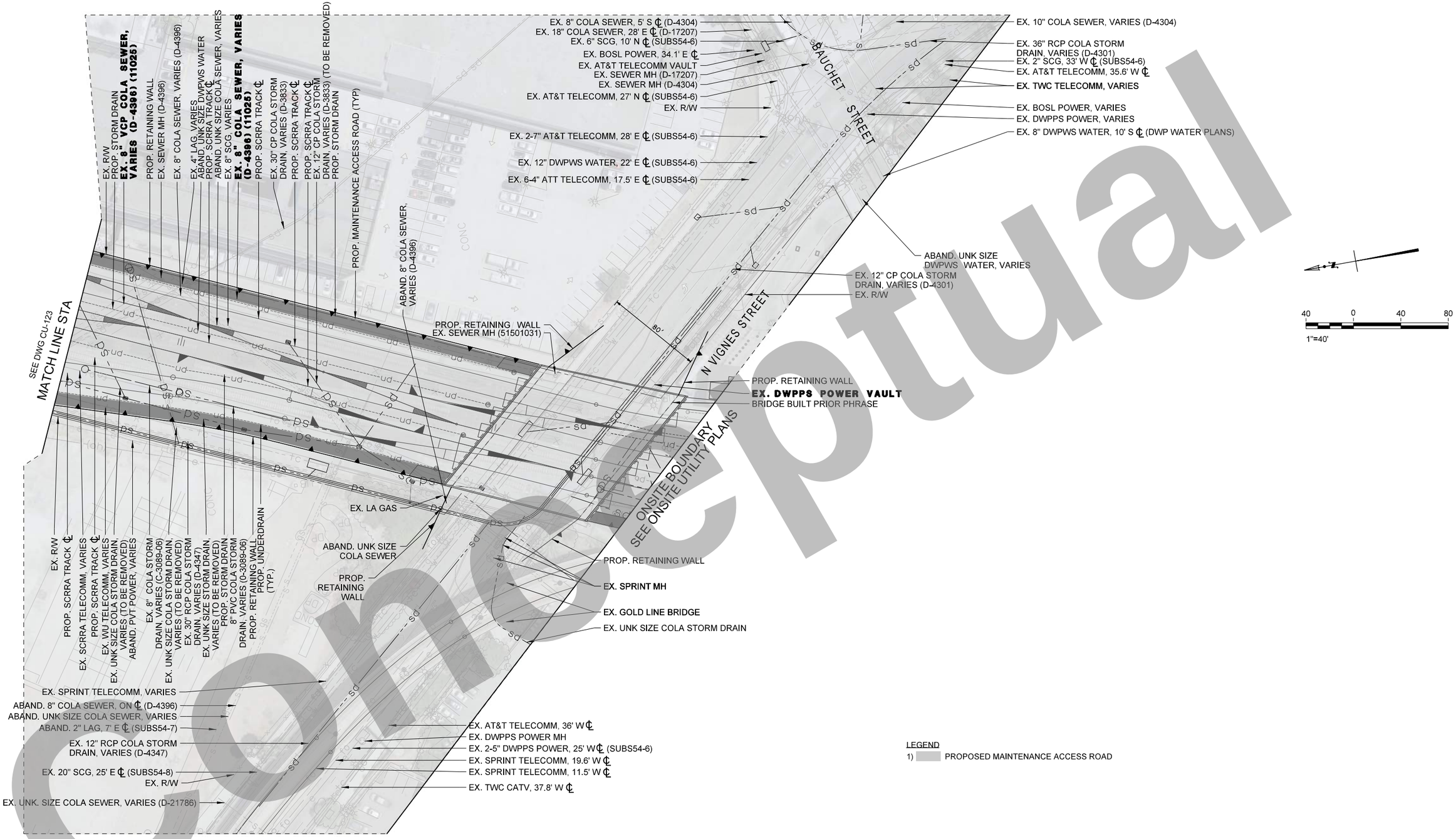

LEGEND

1) PROPOSED MAINTENANCE ACCESS ROAD

AML ACNRS C GEL S GRR
LMR MP AML RPSARGML

Conceptual

THE PREPARATION OF THIS DRAWING HAS BEEN FINANCED IN PART THROUGH A GRANT FROM THE U.S. DEPARTMENT OF TRANSPORTATION, FEDERAL TRANSIT ADMINISTRATION (FTA), UNDER THE FEDERAL TRANSIT ACT OF 1964, AS AMENDED, AND IN PART BY THE TAXES OF THE CITIZENS OF LOS ANGELES COUNTY AND OF THE STATE OF CALIFORNIA.

REV	DATE	BY	APP	REG NO	EXPIRES	SEAL HOLDER	DESCRIPTION

DESIGNED BY M.AGUILAR
DRAWN BY M.AGUILAR
CHECKED BY I.ALTARES
IN CHARGE T.KIM
DATE 7/13/2021

REGISTERED PROFESSIONAL ENGINEER — No. Exp. CIVIL — STATE OF CALIFORNIA

Metro — LOS ANGELES COUNTY METROPOLITAN TRANSPORTATION AUTHORITY

BA INC — TRUE ENGINEERING EXCELLENCE

HDR — HDR ENGINEERING, 350 S. GRAND AVENUE, SUITE 2200, LOS ANGELES, CA 90071, (213) 236-5800

SUBMITTED: _____ PROJECT MANAGER

APPROVED: _____

LINK UNION STATION PROJECT
COMPOSITE UTILITY IMPACT PLANS
SHEET 7 OF 8

CONTRACT NO
DRAWING NO CU-123 REV
SCALE 1"=40'
SHEET NO 63 of 72

Plot Driver=$PLTDRV$$ Pentable=PlotStamp.tbl USER = mshahin 10:38:20 AM 6/9/2020 $FILE$

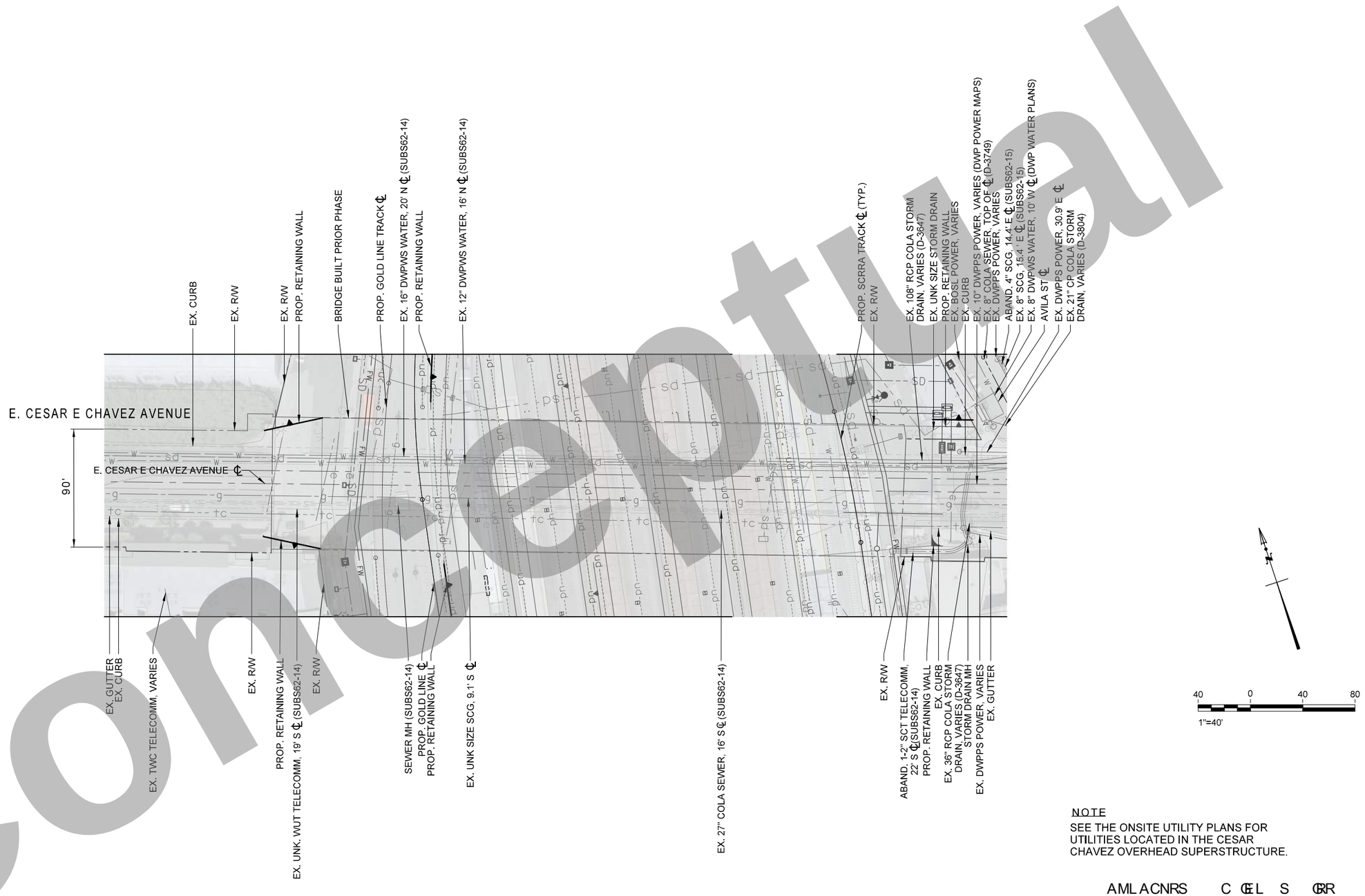

NOTE

SEE THE ONSITE UTILITY PLANS FOR UTILITIES LOCATED IN THE CESAR CHAVEZ OVERHEAD SUPERSTRUCTURE.

AML ACNRS C CEL S GRR
LMR MP AML RPSARGML

Concept

THE PREPARATION OF THIS DRAWING HAS BEEN FINANCED IN PART THROUGH A GRANT FROM THE U.S. DEPARTMENT OF TRANSPORTATION, FEDERAL TRANSIT ADMINISTRATION (FTA), UNDER THE FEDERAL TRANSIT ACT OF 1964, AS AMENDED, AND IN PART BY THE TAXES OF THE CITIZENS OF LOS ANGELES COUNTY AND OF THE STATE OF CALIFORNIA.

REV	DATE	BY	APP	REG NO	EXPIRES	SEAL HOLDER	DESCRIPTION

DESIGNED BY M.AGUILAR
DRAWN BY M.AGUILAR
CHECKED BY I.ALTARES
IN CHARGE T.KIM
DATE 7/13/2021

REGISTERED PROFESSIONAL ENGINEER — No. ____ Exp. ____ CIVIL — STATE OF CALIFORNIA

Metro
LOS ANGELES COUNTY METROPOLITAN TRANSPORTATION AUTHORITY

BA INC (SBE/DBE/MBE) TRUE ENGINEERING EXCELLENCE
HDR ENGINEERING 350 S. GRAND AVENUE SUITE 1600 LOS ANGELES, CA 90071 (213) 236-5800

SUBMITTED: _____ PROJECT MANAGER
APPROVED: _____

LINK UNION STATION PROJECT

COMPOSITE UTILITY IMPACT PLANS SHEET 8 OF 8

CONTRACT NO
DRAWING NO CU-124 REV
SCALE 1"=40'
SHEET NO 64 of 72

Plot Driver=$PLTDRVS$ Pentable=PlotStamp.tbl USER = mshahin 10:38:42 AM 6/9/2020 $FILE$

GENERAL NOTES:

1. SEE DRAWING C-001 FOR NOTES & G1-002 FOR KEY MAP.
2. SEE DRAWINGS CU-221 TO CU-223 FOR OTHER UTILITES.
3. PIPE SIZES SHOWN ARE PRELIMINARY & ARE SUBJECT TO CHANGE
4. SD LATERALS ARE 12" RCP UNLESS OTHERWISE NOTED.

(D#) CONSTRUCTION NOTES - STORM DRAIN:

1. CONSTRUCT STORM DRAIN LINE, SIZE & TYPE PER PLAN.
2. CONSTRUCT MANHOLE.
3. CONSTRUCT WATER QUALITY UNIT.
4. CONSTRUCT CISTERN.
5. CONSTRUCT CATCH BASIN.
6. STORM DRAIN POINT OF CONNECTION.
7. CONNECT TO EXISTING CATCH BASIN.
8. CONNECT TO EXISTING JUNCTION.

(N#) CONSTRUCTION NOTES - NON-POTABLE:

1. CONSTRUCT NON-POTABLE WATER LINE.
2. CONSTRUCT MECHANICAL SKID.
3. CONNECT SKID TO DOMESTIC WATER. SEE GENERAL NOTE 2.

(U#) CONSTRUCTION NOTES - UNDERDRAIN:

1. CONSTRUCT UNDERDRAINS.
2. CONSTRUCT CLEANOUT.
3. CONNECT UNDERDRAIN TO STORM DRAIN.

LEGEND

LAUS FIRE ACCESS ROAD



Concept

CONCEPTUAL DESIGN SUBMITTAL NOT FOR CONSTRUCTION

THE PREPARATION OF THIS DRAWING HAS BEEN FINANCED IN PART THROUGH A GRANT FROM THE U.S. DEPARTMENT OF TRANSPORTATION, FEDERAL TRANSIT ADMINISTRATION (FTA), UNDER THE FEDERAL TRANSIT ACT OF 1964, AS AMENDED, AND IN PART BY THE TAXES OF THE CITIZENS OF LOS ANGELES COUNTY AND OF THE STATE OF CALIFORNIA.

REV	DATE	BY	APP	REG NO	EXPIRES	SEAL HOLDER	DESCRIPTION

DESIGNED BY T.BELL
DRAWN BY E.GUTIERREZ
CHECKED BY R.IBARRA
IN CHARGE T.KIM
DATE 7/13/2021

Metro
LOS ANGELES COUNTY
METROPOLITAN TRANSPORTATION AUTHORITY

HDR ENGINEERING
350 S. GRAND AVENUE
SUITE 2900
LOS ANGELES, CA 90071
(213) 239-5800

SUBMITTED: _____ PROJECT MANAGER
APPROVED: _____

LINK UNION STATION PROJECT
CIVIL DRAWINGS
STATION DRAINAGE PLAN - 1

CONTRACT NO
DRAWING NO CG-231
REV --
SCALE 1" = 40'
SHEET NO 65 of 72

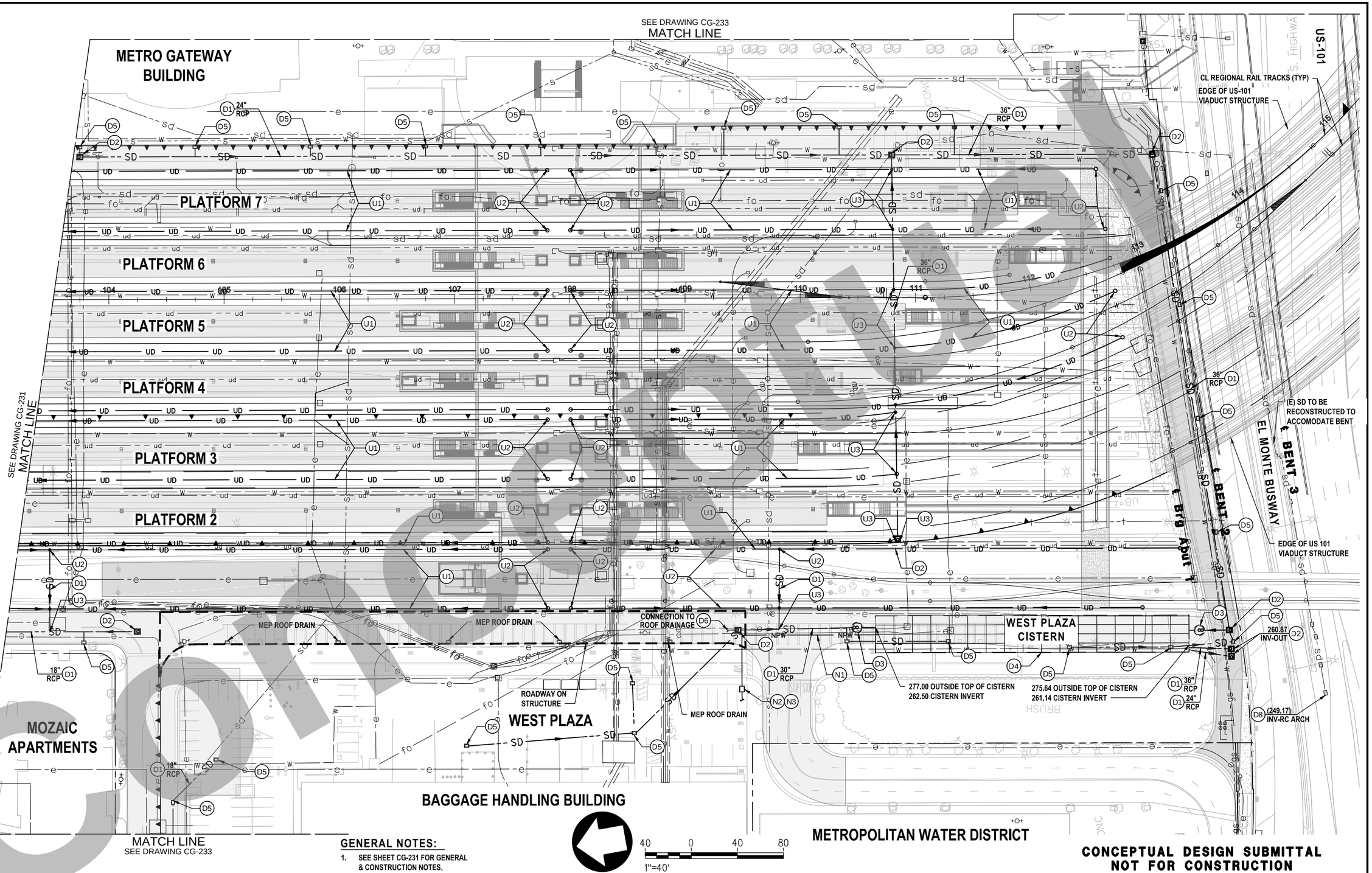

GENERAL NOTES:

1. SEE SHEET CG-231 FOR GENERAL & CONSTRUCTION NOTES.

40 0 40 80

1"=40'

CONCEPTUAL DESIGN SUBMITTAL NOT FOR CONSTRUCTION

Correct

THE PREPARATION OF THIS DRAWING HAS BEEN FINANCED IN PART THROUGH A GRANT FROM THE U.S. DEPARTMENT OF TRANSPORTATION, FEDERAL TRANSIT ADMINISTRATION (FTA), UNDER THE FEDERAL TRANSIT ACT OF 1964, AS AMENDED, AND IN PART BY THE TAXES OF THE CITIZENS OF LOS ANGELES COUNTY AND OF THE STATE OF CALIFORNIA.

REV	DATE	BY	APP	REG NO	EXPIRES	SEAL HOLDER	DESCRIPTION

DESIGNED BY	T.BELL
DRAWN BY	E.GUTIERREZ
CHECKED BY	R.IBARRA
IN CHARGE	T.KIM
DATE	7/13/2021

Metro

LOS ANGELES COUNTY
METROPOLITAN TRANSPORTATION AUTHORITY

HDR ENGINEERING
350 S. GRAND AVENUE
SUITE 2600
LOS ANGELES, CA 90071
(213) 239-5800

SUBMITTED: _____ PROJECT MANAGER

APPROVED: _____

LINK UNION STATION PROJECT

CIVIL DRAWINGS
STATION DRAINAGE PLAN - 2

CONTRACT NO	
DRAWING NO	CG-232
REV	--
SCALE	1" = 40'
SHEET NO	66 of 72

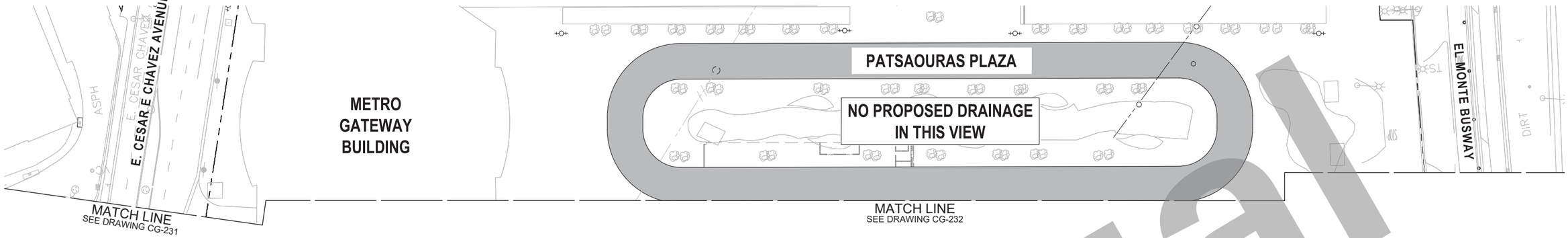

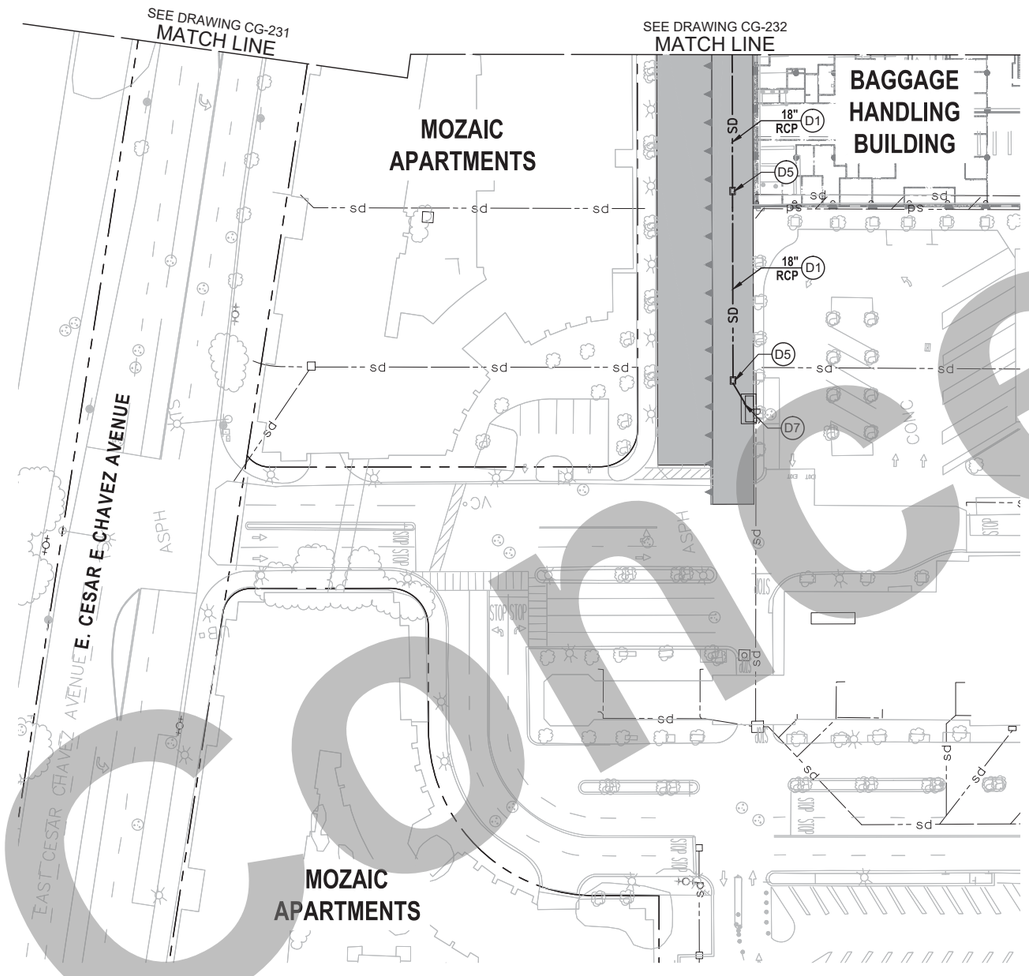

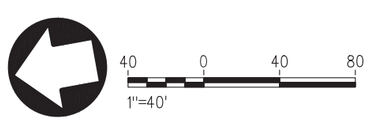

GENERAL NOTES:

1. SEE SHEET CG-231 FOR GENERAL & CONSTRUCTION NOTES.

CONCEPTUAL DESIGN SUBMITTAL
NOT FOR CONSTRUCTION

Conceptual

THE PREPARATION OF THIS DRAWING HAS BEEN FINANCED IN PART THROUGH A GRANT FROM THE U.S. DEPARTMENT OF TRANSPORTATION, FEDERAL TRANSIT ADMINISTRATION (FTA), UNDER THE FEDERAL TRANSIT ACT OF 1964, AS AMENDED, AND IN PART BY THE TAXES OF THE CITIZENS OF LOS ANGELES COUNTY AND OF THE STATE OF CALIFORNIA.

REV	DATE	BY	APP	REG NO	EXPIRES	SEAL HOLDER	DESCRIPTION

DESIGNED BY T.BELL
DRAWN BY E.GUTIERREZ
CHECKED BY R.IBARRA
IN CHARGE T.KIM
DATE 7/13/2021

Metro
LOS ANGELES COUNTY
METROPOLITAN TRANSPORTATION AUTHORITY

w2 design
50 SOUTH DELACEY AVENUE, SUITE 100
PASADENA, CALIFORNIA 91105
T (626) 356-3553 | F (626) 765-1437
EMAIL: INFO@W2DESIGNINC.COM

HDR ENGINEERING
350 S. GRAND AVENUE
SUITE 2500
LOS ANGELES, CA 90071
(213) 239-5800

SUBMITTED: _____ PROJECT MANAGER

APPROVED: _____

LINK UNION STATION PROJECT
CIVIL DRAWINGS
STATION DRAINAGE PLAN - 3

CONTRACT NO
DRAWING NO CG-233
REV --
SCALE 1" = 40'

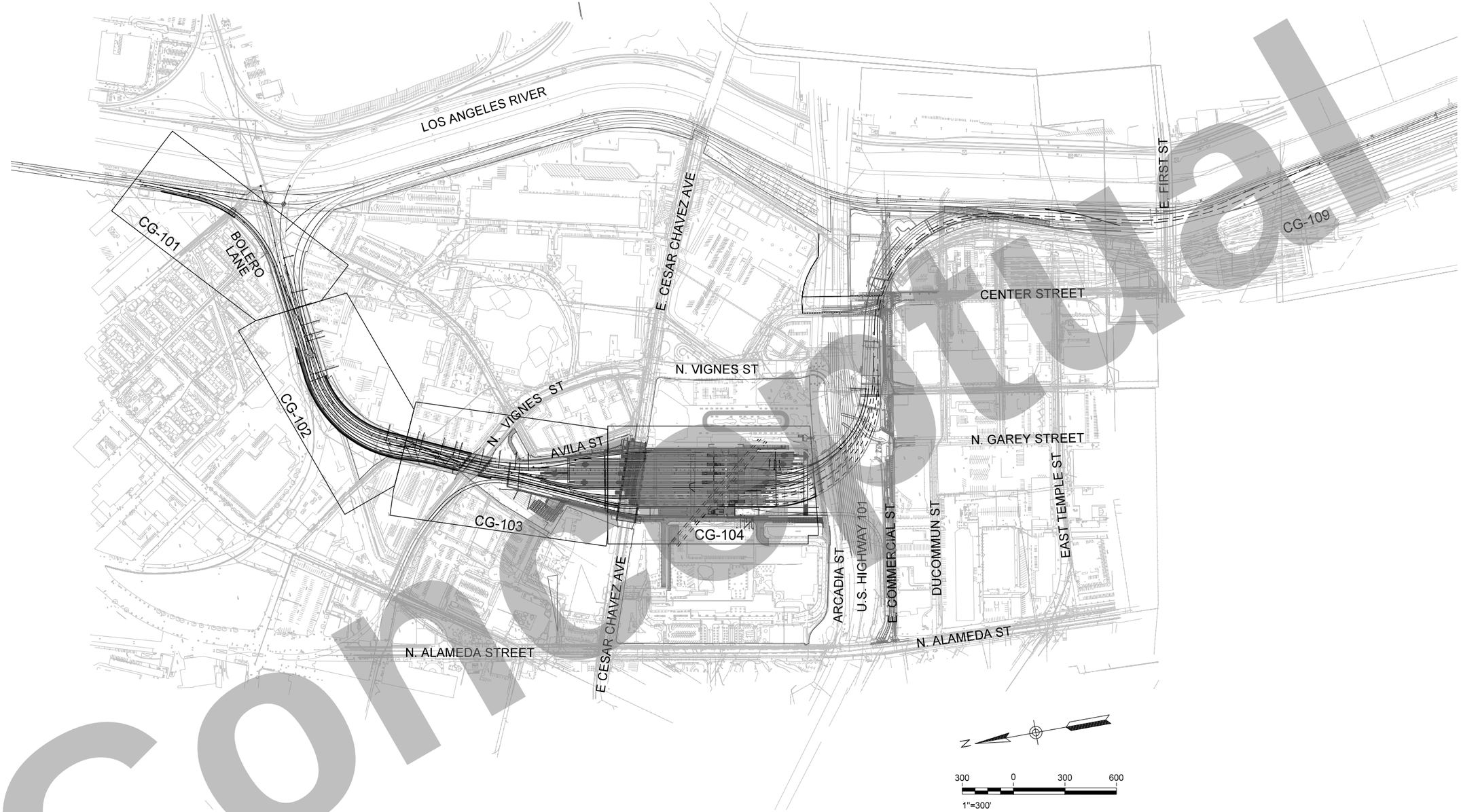

Conceptual

CONCEPTUAL DESIGN SUBMITTAL
NOT FOR CONSTRUCTION

THE PREPARATION OF THIS DRAWING HAS BEEN FINANCED IN PART THROUGH A GRANT FROM THE U.S. DEPARTMENT OF TRANSPORTATION, FEDERAL TRANSIT ADMINISTRATION (FTA), UNDER THE FEDERAL TRANSIT ACT OF 1964, AS AMENDED, AND IN PART BY THE TAXES OF THE CITIZENS OF LOS ANGELES COUNTY AND OF THE STATE OF CALIFORNIA.

REV	DATE	BY	APP	REG NO	EXPIRES	SEAL HOLDER	DESCRIPTION

DESIGNED BY F. ZHEN
DRAWN BY N. BACANI
CHECKED BY M. HARROLD
IN CHARGE T. KIM
DATE 7/13/2021

REGISTERED PROFESSIONAL ENGINEER — No. ____ EXP. ____ CIVIL — STATE OF CALIFORNIA

Metro
LOS ANGELES COUNTY
METROPOLITAN TRANSPORTATION AUTHORITY

HDR
HDR ENGINEERING
350 S. GRAND AVENUE
SUITE 2900
LOS ANGELES, CA 90071
(213) 239-5800

SUBMITTED: _____ PROJECT MANAGER
APPROVED: _____

LINK UNION STATION PROJECT
OFFSITE - DRAINAGE
KEY MAP
OFFSITE DRAINAGE

CONTRACT NO
DRAWING NO CG-002 REV
SCALE 1"=300'
SHEET NO 68 of 72

Plot Driver=$PLTDRVS$ Pentable=PlotStamp.tbl USER = mshahin 8:18:49 AM 6/11/2020 $FILE$

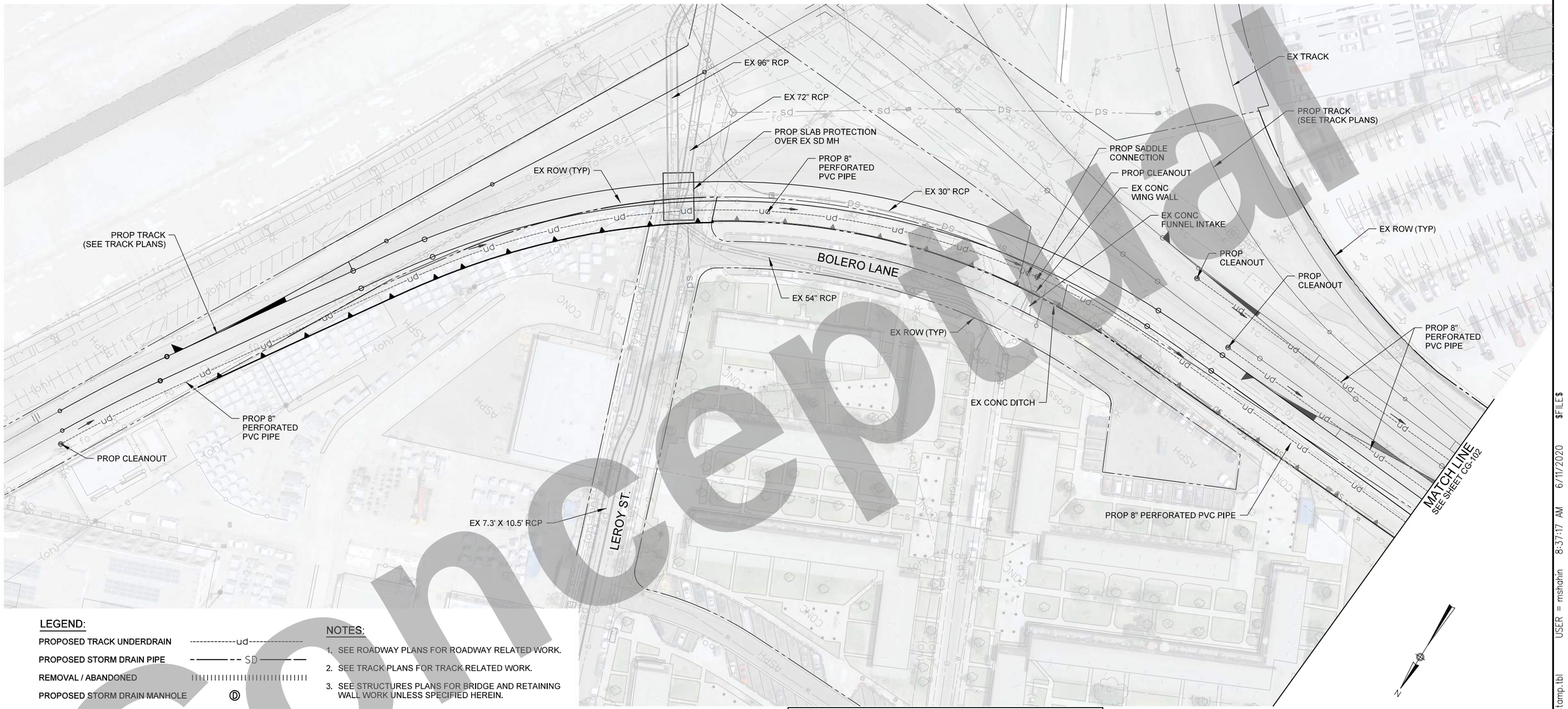

Conceptual

LEGEND:

PROPOSED TRACK UNDERDRAIN	----------ud----------
PROPOSED STORM DRAIN PIPE	——— - - SD ———
REMOVAL / ABANDONED	
PROPOSED STORM DRAIN MANHOLE	Ⓓ
PROPOSED CLEANOUT	
RIGHT OF WAY	
CENTER LINE	
RETAINING WALL PROPOSED	
RETAINING WALL EXISTING	
CUT	C
FILL	F

NOTES:

1. SEE ROADWAY PLANS FOR ROADWAY RELATED WORK.
2. SEE TRACK PLANS FOR TRACK RELATED WORK.
3. SEE STRUCTURES PLANS FOR BRIDGE AND RETAINING WALL WORK UNLESS SPECIFIED HEREIN.
4. SHEET MEANT TO SHOW TRACK DRAINAGE ONLY. SEE CG-231 THROUGH CG-233 FOR LAUS STATION DRAINAGE.

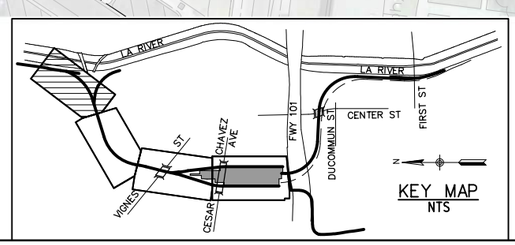

CONCEPTUAL DESIGN SUBMITTAL
NOT FOR CONSTRUCTION

THE PREPARATION OF THIS DRAWING HAS BEEN FINANCED IN PART THROUGH A GRANT FROM THE U.S. DEPARTMENT OF TRANSPORTATION, FEDERAL TRANSIT ADMINISTRATION (FTA), UNDER THE FEDERAL TRANSIT ACT OF 1964, AS AMENDED, AND IN PART BY THE TAXES OF THE CITIZENS OF LOS ANGELES COUNTY AND OF THE STATE OF CALIFORNIA.

REV	DATE	BY	APP	REG NO	EXPIRES	SEAL HOLDER	DESCRIPTION

DESIGNED BY F. ZHEN
DRAWN BY N. BACANI
CHECKED BY M. HARROLD
IN CHARGE T. KIM
DATE 7/13/2021

REGISTERED PROFESSIONAL ENGINEER No. Exp. CIVIL STATE OF CALIFORNIA

Metro
LOS ANGELES COUNTY METROPOLITAN TRANSPORTATION AUTHORITY

HDR
350 S. GRAND AVENUE
SUITE 2900
LOS ANGELES, CA 90071
(213) 239-5800

SUBMITTED: _____ PROJECT MANAGER
APPROVED: _____

LINK UNION STATION PROJECT
OFFSITE - DRAINAGE
TRACK DRAINAGE PLAN
SHEET 1 OF 4

CONTRACT NO
DRAWING NO CG-101
REV
SCALE 1"=40'
SHEET NO 69 of 72

Plot Driver=$PLTDRVS$ Pentable=PlotStamp.tbl USER = mshahin 8:37:17 AM 6/11/2020 $FILE$

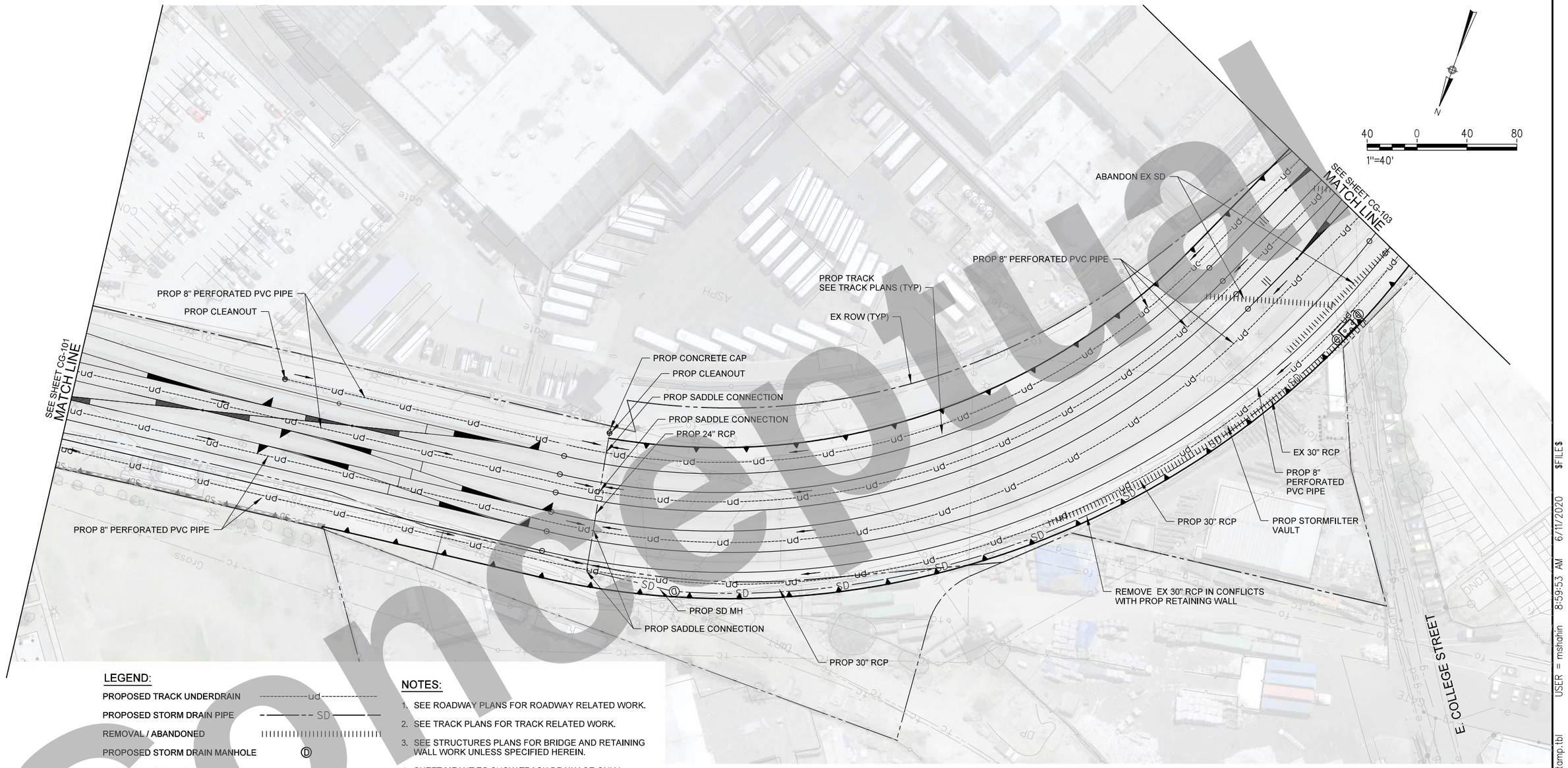

LEGEND:

- PROPOSED TRACK UNDERDRAIN ----------ud----------
- PROPOSED STORM DRAIN PIPE – – – – SD – – – – –
- REMOVAL / ABANDONED
- PROPOSED STORM DRAIN MANHOLE Ⓓ
- PROPOSED CLEANOUT ⊕
- RIGHT OF WAY
- CENTER LINE
- RETAINING WALL PROPOSED
- RETAINING WALL EXISTING
- CUT ———C———
- FILL ———F———

NOTES:

1. SEE ROADWAY PLANS FOR ROADWAY RELATED WORK.
2. SEE TRACK PLANS FOR TRACK RELATED WORK.
3. SEE STRUCTURES PLANS FOR BRIDGE AND RETAINING WALL WORK UNLESS SPECIFIED HEREIN.
4. SHEET MEANT TO SHOW TRACK DRAINAGE ONLY. SEE CG-231 THROUGH CG-233 FOR LAUS STATION DRAINAGE.

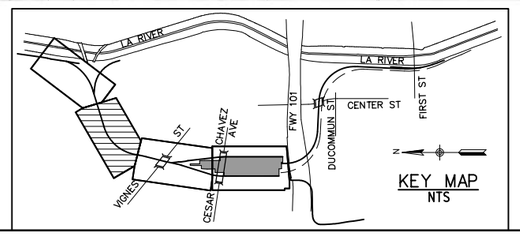

CONCEPTUAL DESIGN SUBMITTAL
NOT FOR CONSTRUCTION

Conceptual

THE PREPARATION OF THIS DRAWING HAS BEEN FINANCED IN PART THROUGH A GRANT FROM THE U.S. DEPARTMENT OF TRANSPORTATION, FEDERAL TRANSIT ADMINISTRATION (FTA), UNDER THE FEDERAL TRANSIT ACT OF 1964, AS AMENDED, AND IN PART BY THE TAXES OF THE CITIZENS OF LOS ANGELES COUNTY AND OF THE STATE OF CALIFORNIA.

REV	DATE	BY	APP	REG NO	EXPIRES	SEAL HOLDER	DESCRIPTION

DESIGNED BY F. ZHEN
DRAWN BY N. BACANI
CHECKED BY M. HARROLD
IN CHARGE T. KIM
DATE 7/13/2021

REGISTERED PROFESSIONAL ENGINEER — No. ____ Exp. ____ CIVIL — STATE OF CALIFORNIA

Metro
LOS ANGELES COUNTY
METROPOLITAN TRANSPORTATION AUTHORITY
HDR
350 S. GRAND AVENUE
SUITE 2900
LOS ANGELES, CA 90071
(213) 239-5800

SUBMITTED: _____ PROJECT MANAGER
APPROVED: _____

LINK UNION STATION PROJECT
OFFSITE - DRAINAGE
TRACK DRAINAGE PLAN
SHEET 2 OF 4

CONTRACT NO
DRAWING NO CG-102 REV
SCALE 1"=40'
SHEET NO 70 of 72

Plot Driver=$PLTDRV$$ Pentable=PlotStamp.tbl USER = mshahin 8:59:53 AM 6/11/2020 $FILE$

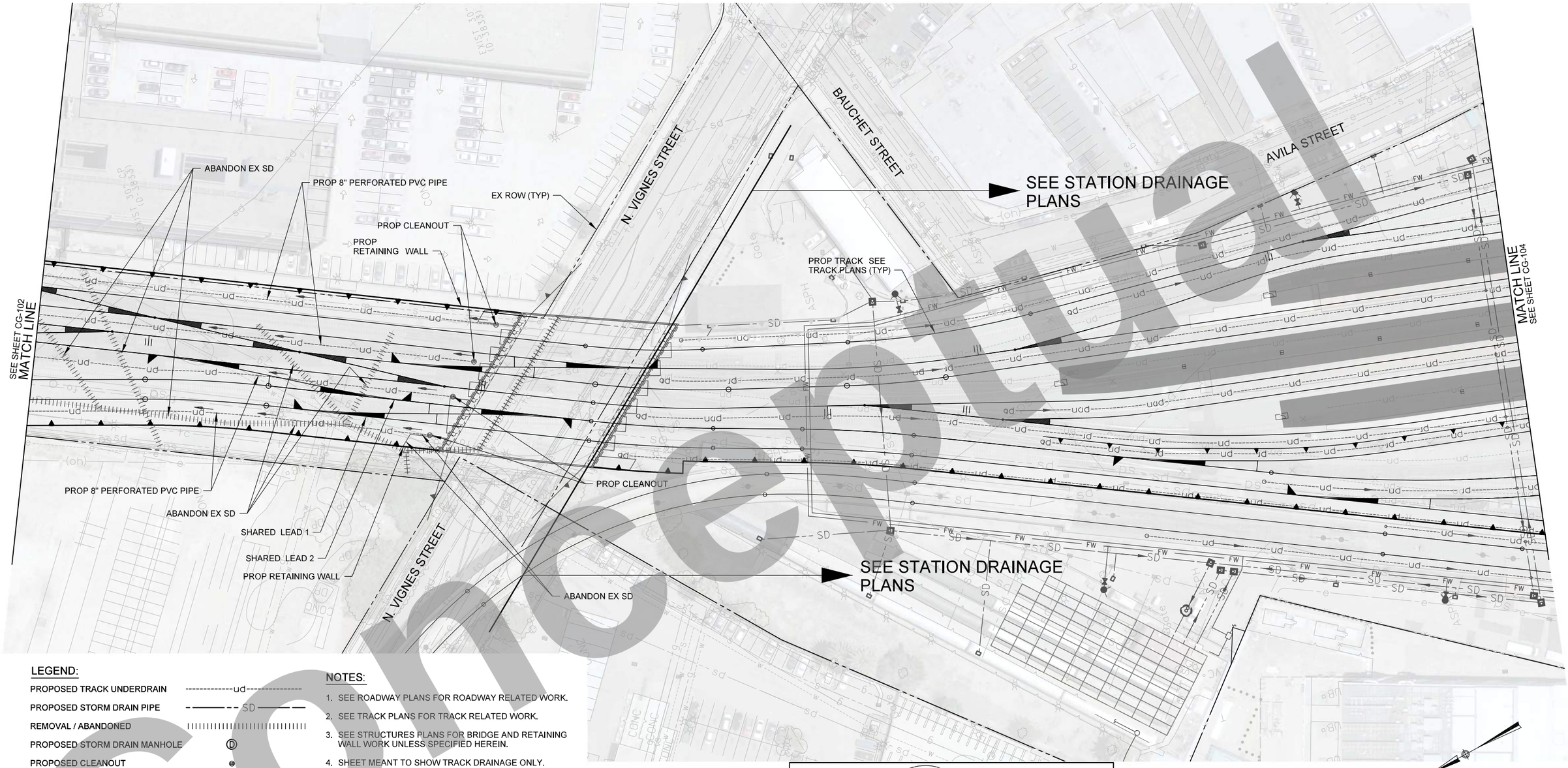

LEGEND:

PROPOSED TRACK UNDERDRAIN	ud
PROPOSED STORM DRAIN PIPE	SD
REMOVAL / ABANDONED	
PROPOSED STORM DRAIN MANHOLE	D
PROPOSED CLEANOUT	
RIGHT OF WAY	
CENTER LINE	
RETAINING WALL PROPOSED	
RETAINING WALL EXISTING	
CUT	C
FILL	F

NOTES:

1. SEE ROADWAY PLANS FOR ROADWAY RELATED WORK.
2. SEE TRACK PLANS FOR TRACK RELATED WORK.
3. SEE STRUCTURES PLANS FOR BRIDGE AND RETAINING WALL WORK UNLESS SPECIFIED HEREIN.
4. SHEET MEANT TO SHOW TRACK DRAINAGE ONLY. SEE CG-231 THROUGH CG-233 FOR LAUS STATION DRAINAGE.

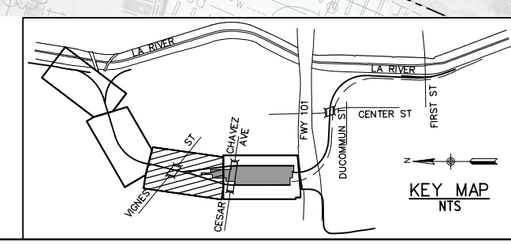

CONCEPTUAL DESIGN SUBMITTAL
NOT FOR CONSTRUCTION

Conceptual

THE PREPARATION OF THIS DRAWING HAS BEEN FINANCED IN PART THROUGH A GRANT FROM THE U.S. DEPARTMENT OF TRANSPORTATION, FEDERAL TRANSIT ADMINISTRATION (FTA), UNDER THE FEDERAL TRANSIT ACT OF 1964, AS AMENDED, AND IN PART BY THE TAXES OF THE CITIZENS OF LOS ANGELES COUNTY AND OF THE STATE OF CALIFORNIA.

REV	DATE	BY	APP	REG NO	EXPIRES	SEAL HOLDER	DESCRIPTION

DESIGNED BY F. ZHEN
DRAWN BY N. BACANI
CHECKED BY M. HARROLD
IN CHARGE T. KIM
DATE 7/13/2021

REGISTERED PROFESSIONAL ENGINEER No. Exp. CIVIL STATE OF CALIFORNIA

Metro
LOS ANGELES COUNTY
METROPOLITAN TRANSPORTATION AUTHORITY

HDR
HDR ENGINEERING
350 S. GRAND AVENUE
SUITE 2900
LOS ANGELES, CA 90071
(213) 239-5800

SUBMITTED: _____ PROJECT MANAGER
APPROVED: _____

LINK UNION STATION PROJECT
OFFSITE - DRAINAGE
TRACK DRAINAGE PLAN
SHEET 3 OF 4

CONTRACT NO
DRAWING NO CG-103
REV
SCALE 1"=40'
SHEET NO 71 of 72

E. CESAR CHAVEZ AVENUE

SEE SHEET CG-0103
MATCH LINE

FOR REFERENCE ONLY
SEE STATION DRAINAGE
FOR DETAILS

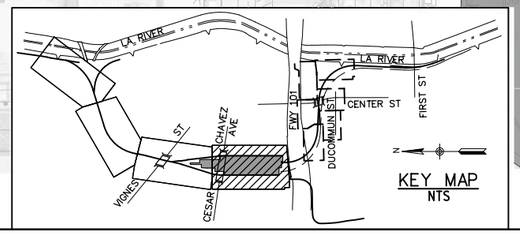

40 0 40 80
1"=40'

CONCEPTUAL DESIGN SUBMITTAL
NOT FOR CONSTRUCTION

Concept

THE PREPARATION OF THIS DRAWING HAS BEEN FINANCED IN PART THROUGH A GRANT FROM THE U.S. DEPARTMENT OF TRANSPORTATION, FEDERAL TRANSIT ADMINISTRATION (FTA), UNDER THE FEDERAL TRANSIT ACT OF 1964, AS AMENDED, AND IN PART BY THE TAXES OF THE CITIZENS OF LOS ANGELES COUNTY AND OF THE STATE OF CALIFORNIA.

REV	DATE	BY	APP	REG NO	EXPIRES	SEAL HOLDER	DESCRIPTION

DESIGNED BY F. ZHEN
DRAWN BY N. BACANI
CHECKED BY M. HARROLD
IN CHARGE T. KIM
DATE 7/13/2021

REGISTERED PROFESSIONAL ENGINEER
No. Exp. CIVIL
STATE OF CALIFORNIA

Metro
LOS ANGELES COUNTY
METROPOLITAN TRANSPORTATION AUTHORITY

HDR
HDR ENGINEERING
350 S. GRAND AVENUE
SUITE 2900
LOS ANGELES, CA 90071
(213) 239-5800

SUBMITTED: _____ PROJECT MANAGER
APPROVED: _____

LINK UNION STATION PROJECT
OFFSITE - DRAINAGE
TRACK DRAINAGE PLAN
SHEET 4 OF 4

CONTRACT NO
DRAWING NO CG-104 REV
SCALE 1"=40'
SHEET NO 72 of 72

Build Alternative Design Option Phase A - Index and Plan Sheets

(THIS PAGE INTENTIONALLY LEFT BLANK)

LINK UNION STATION FINAL EIS/SEIR BUILD ALTERNATIVE DESIGN OPTION - PHASE A PLAN SHEETS

GENERAL		
SHEET NO.	DRAWING NO.	DRAWING TITLE
1		COVER SHEET
2	SC-001	CONSTRUCTION SCHEMATICS - EXISTING CONDITION
3	SC-027	CONSTRUCTION SCHEMATICS - FINAL CONDITION
TRACK		
SHEET NO.	DRAWING NO.	DRAWING TITLE
4	TK-401-P2S	PHASE 2 SUPPLEMENT - KEY MAP TRACK
5	TS-401-P2S	TRACK DRAWINGS - SHEET 1 OF 3 TYPICAL SECTIONS TRACK
6	TS-403 TS	PHASE 2 SUPPLEMENT - SHEET 2 OF 3 TYPICAL SECTIONS TRACK
7	TS-403-P2S	TRACK DRAWINGS - EAST AREA 2 - SHEET 3 OF 3 TYPICAL SECTIONS TRACK
8	TR-401-P2S	PHASE 2 SUPPLEMENT - SHEET 1 OF 1 TRACK REMOVAL PLAN AND NOTES 2
9	TR-402-P2S	PHASE 2 SUPPLEMENT - SHEET 2 OF 2 REMOVAL AND NOTES TRACK REMOVAL PLAN
10	TP-401-P2S	PHASE 2 SUPPLEMENT - RT2 STA 106+73.41 TO 112+75 PLAN AND PROFILE TRACK
11	TP-402-P2S	PHASE 2 SUPPLEMENT - TRACK PLAN AND PROFILE RT2 STA 112+75 TO 120+75
12	TP-403-P2S	PHASE 2 SUPPLEMENT - RT2 STA 120+75 TO 130+50 PLAN AND PROFILE TRACK
13	TP-404-P2S	PHASE 2 SUPPLEMENT - RT2 STA 130+50 TO STA 140+00 PLAN AND PROFILE TRACK
14	TP-405-P2S	PHASE 2 SUPPLEMENT - RT2 STA 140+00 TO STA 149+65 PLAN AND PROFILE TRACK
15	TP-406-P2S	PHASE 2 SUPPLEMENT - RT2 STA 149+65 TO RR2 STA XX+XX PLAN AND PROFILE TRACK
16	TP-407-P2S	PHASE 2 SUPPLEMENT - STA 99+00 TO STA 111+00 CROSSOVER 141.05 PERMAMENT TRACK PROFILE
17	TC-401-P2S	PHASE 2 SUPPLEMENT - RT2 STA 137+00 TO STA 144+00 CROSS SECTIONS TRACK
18	TC-402-P2S	PHASE 2 SUPPLEMENT - RT2 STA 144+50 TO STA 149+50 CROSS SECTIONS TRACK
19	TP-301-E2	TRACK DRAWINGS - EAST AREA 2 - SHEET 1 OF 5 TRACK PLAN AND PROFILE
20	TP-302-E2	TRACK DRAWINGS - EAST AREA 2 - SHEET 2 OF 5 TRACK PLAN AND PROFILE
21	TP-303-E2	TRACK DRAWINGS - EAST AREA 2 - SHEET 3 OF 5 TRACK PLAN AND PROFILE
22	TP-304-E2	TRACK DRAWINGS - EAST AREA 2 - SHEET 4 OF 5 TRACK PLAN AND PROFILE
23	TP-305-E2	TRACK DRAWINGS - EAST AREA 2 - SHEET 5 OF 5 TRACK PLAN AND PROFILE
RIGHT OF WAY		
SHEET NO.	DRAWING NO.	DRAWING TITLE
24	RW-101	RIGHT OF WAY - SHEET 1 OF 8 MAP
25	RW-102	RIGHT OF WAY - SHEET 2 OF 8 MAP
26	RW-103	RIGHT OF WAY - SHEET 3 OF 8 MAP
27	RW-104	RIGHT OF WAY NEEDS - SHEET 4 OF 8 MAP
28	RW-105	RIGHT OF WAY NEEDS - SHEET 5 OF 8 MAP
29	RW-106	RIGHT OF WAY NEEDS - SHEET 6 OF 8 MAP
30	RW-107	RIGHT OF WAY - SHEET 7 OF 8 MAP
31	RW-108	RIGHT OF WAY NEEDS - SHEET 8 OF 8 MAP
STRUCTURES		
SHEET NO.	DRAWING NO.	DRAWING TITLE
32	1 OF 171	LAUS VIADUCT GENERAL PLAN
33	2 OF 171	LAUS VIADUCT GENERAL SECTIONS NO. 1
34	3 OF 171	LAUS VIADUCT GENERAL SECTIONS NO. 2
35	4 OF 171	LAUS VIADUCT GENERAL SECTIONS NO. 3
36	5 OF 171	LAUS VIADUCT GENERAL SECTIONS NO. 4
37	6 OF 171	LAUS VIADUCT GENERAL SECTIONS NO. 5
38	7 OF 171	LAUS VIADUCT GENERAL SECTIONS NO. 6
39	8 OF 171	LAUS VIADUCT GENERAL SECTIONS NO. 7
40	9 OF 171	LAUS VIADUCT GENERAL SECTIONS NO. 8
41	13 OF 17	LAUS VIADUCT STRUCTURE PLAN 1
42	14 OF 17	LAUS VIADUCT STRUCTURE PLAN 2
43	15 OF 17	LAUS VIADUCT STRUCTURE PLAN 3
44	16 OF 17	LAUS VIADUCT STRUCTURE PLAN 4
45	17 OF 17	LAUS VIADUCT STRUCTURE PLAN 5
46	18 OF 17	LAUS VIADUCT STRUCTURE PLAN 6
47	23 OF 171	LAUS VIADUCT FOUNDATION PLAN NO. 1
48	24 OF 171	LAUS VIADUCT FOUNDATION PLAN NO. 2

49	25 OF 171	LAUS VIADUCT FOUNDATION PLAN NO. 3
50	26 OF 171	LAUS VIADUCT FOUNDATION PLAN NO. 4
51	27 OF 171	LAUS VIADUCT FOUNDATION PLAN NO. 5
52	28 OF 171	LAUS VIADUCT FOUNDATION PLAN NO. 6
53	36 OF 171	LAUS VIADUCT BENT 2 LAYOUT
54	37 OF 171	LAUS VIADUCT BENTS 3, 4 AND 5 LAYOUT
55	38 OF 171	LAUS VIADUCT BENT 6 LAYOUT
56	39 OF 171	LAUS VIADUCT BENT 7 LAYOUT
57	40 OF 171	LAUS VIADUCT BENT 8 LAYOUT
58	41 OF 171	LAUS VIADUCT BENT 9 LAYOUT
59	42 OF 171	LAUS VIADUCT BENT 10 LAYOUT
60	43 OF 171	LAUS VIADUCT BENT 11 LAYOUT
61	44 OF 171	LAUS VIADUCT BENT 12 LAYOUT
62	45 OF 171	LAUS VIADUCT BENT 13 LAYOUT
63	46 OF 171	LAUS VIADUCT BENT 14 LAYOUT
64	47 OF 171	LAUS VIADUCT BENT 15, 16 AND 17 LAYOUT
65	48 OF 171	LAUS VIADUCT BENT 18 LAYOUT
66	49 OF 171	LAUS VIADUCT BENT 19 LAYOUT
67	50 OF 171	LAUS VIADUCT BENT 20 LAYOUT
68	51 OF 171	LAUS VIADUCT BENT 21 LAYOUT
69	52 OF 171	LAUS VIADUCT BENT 22 LAYOUT
70	53 OF 171	LAUS VIADUCT BENT 23 LAYOUT
71	54 OF 171	LAUS VIADUCT BENT 24 LAYOUT
72	55 OF 171	LAUS VIADUCT BENT 25 LAYOUT
73	56 OF 171	LAUS VIADUCT BENT 26, 27 AND 28 LAYOUT
74	SW-201	OFFSITE STRUCTURES - GENERAL PLAN No. 1 WILLIAM MEAD HOMES RETAINING WALL
75	SW-202	OFFSITE STRUCTURES - GENERAL PLAN No. 2 WILLIAM MEAD HOMES RETAINING WALL
76	EWP3-302	OFFSITE STRUCTURES - GENERAL PLAN RW #7
77	EWP3-303	OFFSITE STRUCTURES - GENERAL SECTIONS RW #7
78	EWP3-329	OFFSITE STRUCTURES - GENERAL PLAN RW #8 & #9
79	EWP3-330	OFFSITE STRUCTURES - GENERAL SECTIONS RW #8 & #9
80	EWP3-343	OFFSITE STRUCTURES - GENERAL PLAN PROTECTION SLAB DUCOMMUN ST STORM DRAIN

ARCHITECTURE

SHEET NO.	DRAWING NO.	DRAWING TITLE
81	A1-A-104	EARLY WORKS PACKAGE 3 -PHASE A1 - ARCHITECTURE OVERALL PLANS -PLATFORM 3
82	A1-A-110	EARLY WORKS PACKAGE 3 -PHASE A1 - ARCHITECTURE ENLARGED PLANS -PASSAGEWAY
83	A1-A-121	EARLY WORKS PACKAGE 3 -PHASE A1 - ARCHITECTURE ENLARGED PLANS -PLATFORM 3 SHEET 2 OF 3
84	A1-A-122	EARLY WORKS PACKAGE 3 -PHASE A1 - ARCHITECTURE ENLARGED PLANS -PLATFORM 3 SHEET 3 OF 3
85	A1-A-300	EARLY WORKS PACKAGE 3 -PHASE A1 - ARCHITECTURE OVERALL SECTIONS
86	A1-A-361	EARLY WORKS PACKAGE 3 -PHASE A1 - ARCHITECTURE ENLARGED SECTIONS -PLATFORM 3 SHEET 2 OF 5
87	A1-A-362	EARLY WORKS PACKAGE 3 -PHASE A1 - ARCHITECTURE ENLARGED SECTIONS -PLATFORM 3 SHEET 3 OF 5
88	A1-A-363	EARLY WORKS PACKAGE 3 -PHASE A1 - ARCHITECTURE ENLARGED SECTIONS -PLATFORM 3 SHEET 4 OF 5
89	A1-A-364	EARLY WORKS PACKAGE 3 -PHASE A1 - ARCHITECTURE ENLARGED SECTIONS -PLATFORM 3 SHEET 5 OF 5
90	A1-A-400	EARLY WORKS PACKAGE 3 -PHASE A1 - ARCHITECTURE ENLARGED PLAN & SECTION -P3 RAMP
91	A1-A-401	EARLY WORKS PACKAGE 3 -PHASE A1 - ARCHITECTURE ENLARGED PLAN & SECTION -P3 STAIR
92	A2-A-102	EARLY WORKS PACKAGE 3 -PHASE A2 - ARCHITECTURE PLAN -SOUTH PLATFORMS 3-7

CIVIL AND ROADWAY

SHEET NO.	DRAWING NO.	DRAWING TITLE
93	CR-101	IPMO SITE DRAWINGS - HORIZONTAL CONTROL PLAN
94	A1-CR-101	EARLY WORK PACKAGE 3 - PHASE A1 - ON-SITE SOUTHWEST TURNAROUND SITE PLAN
95	A2-CR-101	EARLY WORK PACKAGE 3 - PHASE A2 - CIVIL ON-SITE SOUTHEAST TURNAROUND CIVIL PLAN
96	A2-TP-101	WEST PACKAGE 2 - PHASE A2 - PLAN (SHEET 1 OF 1) TRACK DRAWINGS PLATFORM 4-7 PROPOSED MODIFICATION
97	CR-001	ROADWAY IMPROVEMENTS - TURNAROUND VIERTEL SITE/DIVISION 20 PWT
98	CR-002	LINK US PROJECT - OON-SITE GRADING VIERTEL DRIVEWAY
99	CS-001	ROADWAY IMPROVEMENTS - COMMERCIAL STREET PLAN AND PROFILE STA 10+00.00 TO STA 14+50.00
100	CS-002	ROADWAY IMPROVEMENTS - COMMERCIAL STREET ROADWAY PLAN AND PROFILE STA 14+50 TO STA 19+00
101	CS-003	ROADWAY IMPROVEMENTS - COMMERCIAL STREET PLAN AND PROFILE STA 19+00 TO STA 23+50
102	CS-004	ROADWAY IMPROVEMENTS - COMMERCIAL STREET PLAN AND PROFILE STA 23+50.00 TO STA 24+22.87
103	CS-005	ROADWAY IMPROVEMENTS - OLD CENTER STREET PLAN AND PROFILE STA 12+93.00 TO STA 15+52.75

104	T-101	SIGNING & STRIPING RESTORATION - COMMERCIAL ST. BETWEEN ALAMEDA ST. AND CENTER ST.
105	T-102	SIGNING & STRIPING RESTORATION - COMMERCIAL ST. BETWEEN ALAMEDA ST. AND CENTER ST.
106	C102	RIVER SUBDIVISION WEST BANK LINE - NORTH MAIN STREET MP 101R1-1.18 DOT* 027607D ROADWAY LAYOUT AND PR
107	C103	RIVER SUBDIVISION WEST BANK LINE - NORTH MAIN STREET MP 101R1-1.18 DOT* 027607D ROADWAY IMPROVEMENTS
108	C201	RIVER SUBDIVISION WEST BANK LINE - DWP PRIVATE CROSSING MP 101RI-1.11-X DOT* 027608K ROADWAY LAYOUT

UTILITIES

SHEET NO.	DRAWING NO.	DRAWING TITLE
109	CU-100	EARLY WORKS PACKAGE 3 - PHASE A1 - KEY MAP
110	CU-101	EARLY WORKS PACKAGE 3 - PHASE A1 - COMPOSITE UTILITY PLANS SHEET 1 OF 11
111	CU-102	EARLY WORKS PACKAGE 3 - PHASE A1 - COMPOSITE UTILITY PLANS SHEET 2 OF 11
112	CU-103	EARLY WORKS PACKAGE - PHASE A1 - COMPOSITE UTILITY PLANS SHEET 3 OF 11
113	CU-104	EARLY WORKS PACKAGE 3 - PHASE A1 - COMPOSITE UTILITY PLANS SHEET 4 OF 11
114	CU-105	EARLY WORKS PACKAGE 3 - PHASE A1 - COMPOSITE UTILITY PLANS SHEET 5 OF 11
115	CU-106	EARLY WORKS PACKAGE 3 - PHASE A1 - COMPOSITE UTILITY PLANS SHEET 6 OF 11
116	CU-107	EARLY WORKS PACKAGE 3 - PHASE A1 - COMPOSITE UTILITY PLANSSHEET 7 OF 11
117	CU-108	EARLY WORKS PACKAGE 3 - PHASE A1 - COMPOSITE UTILITY PLANS SHEET 8 OF 11
118	CU-109	EARLY WORKS PACKAGE 3 - PHASE A1 - COMPOSITE UTILITY PLANS SHEET 9 OF 11
119	U-1	UTILITY PLAN
120	U-2	UTILITY PLAN
121	CU-201	EARLY WORKS PACKAGE 3 - PHASE A1 - UTILITY RELOCATION PLANS SHEET 1 OF 13
122	CU-202	EARLY WORKS PACKAGE 3 - PHASE A1 - UTILITY RELOCATION PLANS SHEET 2 OF 13
123	CU-203	EARLY WORKS PACKAGE 3 - PHASE A1 - UTILITY RELOCATION PLANS SHEET 3 OF 13
124	CU-204	EARLY WORKS PACKAGE 3 - PHASE A1 - UTILITY RELOCATION PLANS SHEET 4 OF 13
125	CU-205	EARLY WORKS PACKAGE 3 - PHASE A1 - UTILITY RELOCATION PLANS SHEET 5 OF 13
126	CU-206	EARLY WORKS PACKAGE 3 - PHASE A1 - UTILITY RELOCATION PLANS SHEET 6 OF 13
127	CU-207	EARLY WORKS PACKAGE 3 - PHASE A1 - UTILITY RELOCATION PLANS SHEET 7 OF 13
128	CU-208	EARLY WORKS PACKAGE 3 - PHASE A1 - UTILITY RELOCATION PLANS SHEET 8 OF 13
129	CU-209	EARLY WORKS PACKAGE 3 - PHASE A1 - UTILITY RELOCATION PLANS SHEET 9 OF 13
130	CU-210	EARLY WORKS PACKAGE 3 - PHASE A2 - FIRE HYDRANT RELOCATIONS SHEET 10 OF 13
131	CU-211	EARLY WORKS PACKAGE 3 - PHASE A2 - FIRE WATER SERVICE RELOCATIONS SHEET 11 OF 13
132	CU-212	EARLY WORKS PACKAGE 3 - PHASE A1 - FIRE HYDRANT RELOCATIONS SHEET 12 OF 13
133	CU-300	EARLY WORKS PACKAGE 3 - PHASE A2 - TRENCHING/POTHOLE SUMMARY MATRIX SHEET 1 OF 4
134	CU-301	EARLY WORKS PACKAGE 3 - PHASE A2 - TRENCHING/POTHOLE SUMMARY MATRIX SHEET 2 OF 4
135	CU-302	EARLY WORKS PACKAGE 3 - PHASE A2 - EXISTING UTILITY CONFLICT MATRIX SHEET 3 OF 4
136	CU-303	EARLY WORKS PACKAGE 3 - PHASE A2 - ONSITE UTILITY - TABLE SHEET 4 OF 4

DRAINAGE

SHEET NO.	DRAWING NO.	DRAWING TITLE
137	CG-002	DRAINAGE PLANS - KEY MAP
138	CG-101	DRAINAGE PLANS - SHEET 1 OF 9
139	CG-102	DRAINAGE PLANS - SHEET 2 OF 9
140	CG-103	DRAINAGE PLANS - SHEET 3 OF 9
141	CG-104	DRAINAGE PLANS - SHEET 4 OF 9
142	CG-105	DRAINAGE PLANS - SHEET 5 OF 9
143	CG-106	DRAINAGE PLANS - SHEET 6 OF 9
144	CG-107	DRAINAGE PLANS - SHEET 7 OF 9
145	CG-108	DRAINAGE PLANS - SHEET 8 OF 9
146	CG-109	DRAINAGE PLANS - SHEET 9 OF 9

LINK UNION STATION PROJECT

CONTRACT NUMBER PS2415-3172

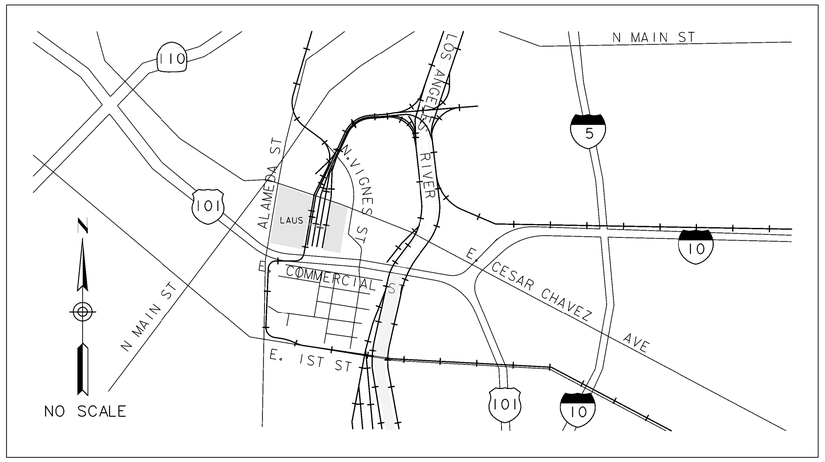

LOCATION MAP

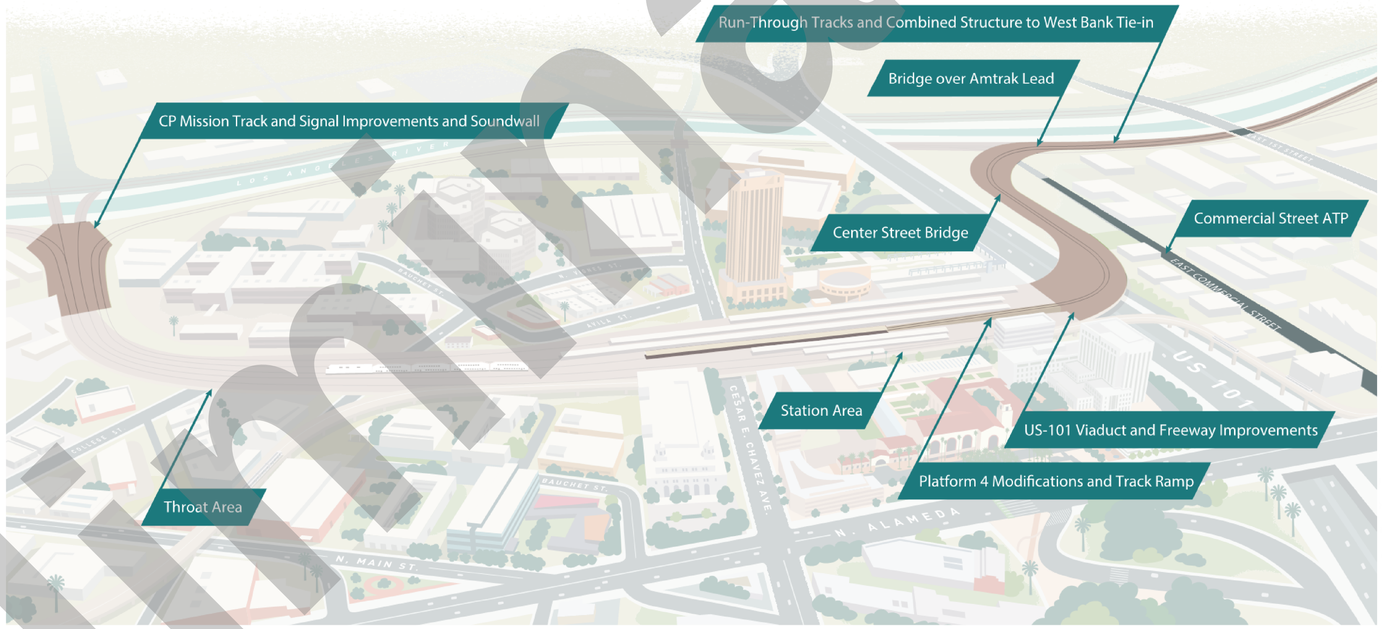

Preliminary

Metro

NOT FOR CONSTRUCTION
FEBRUARY 21, 2025

LOS ANGELES COUNTY METROPOLITAN TRANSPORTATION AUTHORITY

HDR

2/21/2025 4:46:26 PM USER = KROXAS
c:\pwworking\sac\d1076115\LUS-AIGI001.dgn
C:\Users\KROXAS\Documents\Projects\LinkUS\PlotStamp.tbl
c:\pwworking\sac\d0603326\SCRIP-11x17bw_pdf.pltcfg

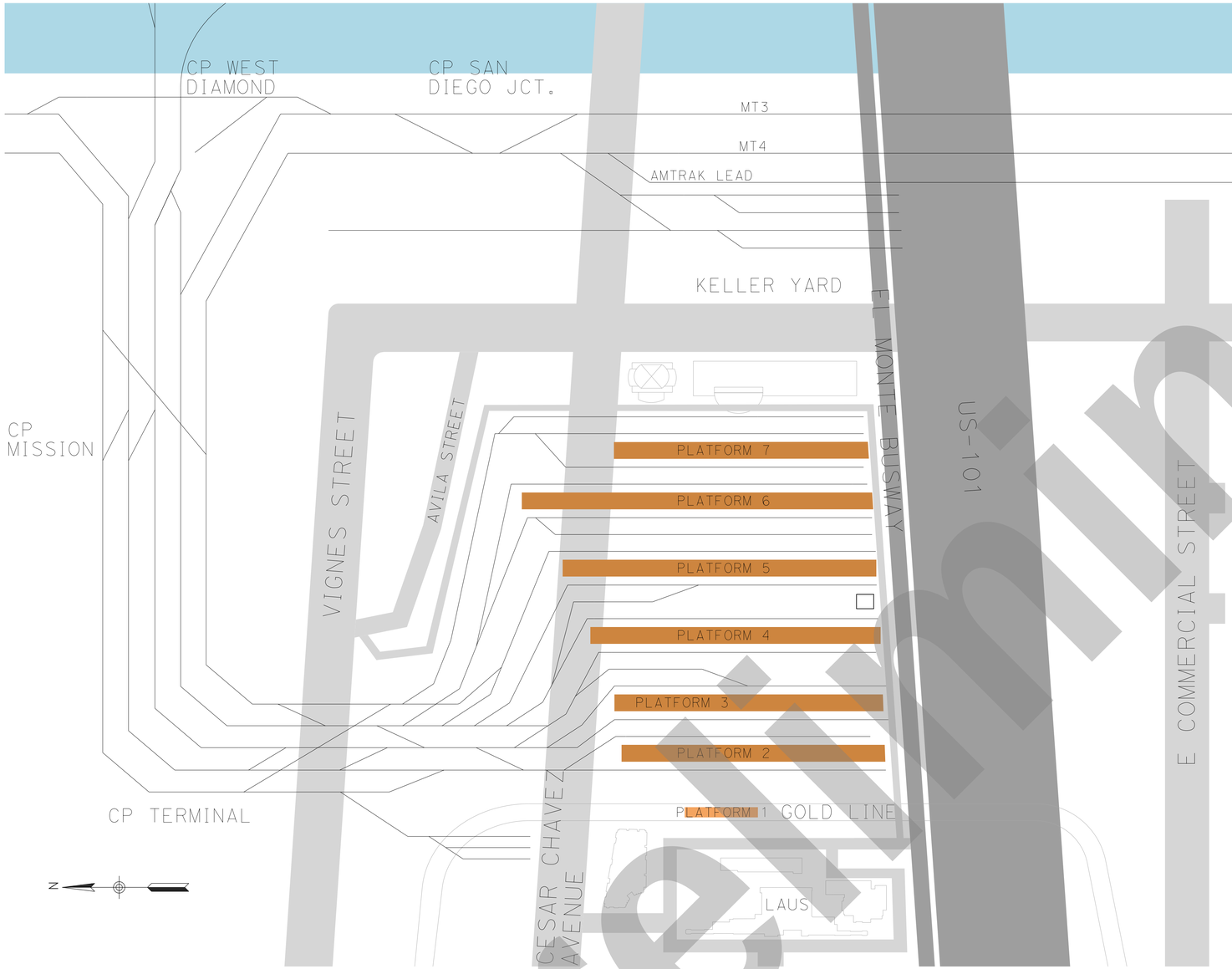

EXISTING CONDITION

EXISTING CONDITION

LEGEND

- REMOVE TRACK
- CONSTRUCT TRACK
- REMOVE PLATFORM/BUILDING
  REMOVE ACCESS ROAD
- CONSTRUCT PLATFORM
  CONSTRUCT BRIDGE SUPERSTRUCTURE
  CONSTRUCT PROTECTION SLAB
- CONSTRUCT RETAINING WALL
- CONSTRUCT BRIDGE SUBSTRUCTURE
- CONSTRUCT ACCESS ROAD
- HIGHWAY MODIFICATIONS
- OVEREXCAVATION
- EXISTING TRACK
- CONSTRUCTED TRACK
- EXISTING PLATFORM
- CONSTRUCTED PLATFORM
- CONSTRUCTED RETAINING WALL
- CONSTRUCTED BRIDGE
  CONSTRUCTED PROTECTION SLAB
- CONSTRUCTED ACCESS ROAD

NOTES:

1. DRAWINGS ARE FOR REFERENCE ONLY AND REPRESENT ONE HIGH-LEVEL FEASIBLE CONSTRUCTION SEQUENCE FOR THE PROJECT.
2. FOR DETAILED US-101 CONSTRUCTION STAGING SEE US-101 ROADWAY STAGING DRAWINGS AND EXHIBITS.
3. WORK SHOWN ON SC-010 THROUGH SC-024 HAS BEEN SEPERATED BY LOCATION (EAST AREA AND WEST AREA).
   WORK IN EACH AREA IS ASSUMED TO OCCUR INDEPENDANT FROM WORK IN THE OTHER AREA UNLESS OTHERWISE NOTED.
4. COMPLETION OF WORK SHOWN ON SC-002 THROUGH SC-024 IS ASSUMED TO BE REQUIRED TO PERFORM WORK SHOWN ON SC-025 AND SC-026

NOT FOR CONSTRUCTION

THE PREPARATION OF THIS DRAWING HAS BEEN FINANCED IN PART THROUGH A GRANT FROM THE U.S. DEPARTMENT OF TRANSPORTATION, FEDERAL TRANSIT ADMINISTRATION (FTA), UNDER THE FEDERAL TRANSIT ACT OF 1964, AS AMENDED, AND IN PART BY THE TAXES OF THE CITIZENS OF LOS ANGELES COUNTY AND OF THE STATE OF CALIFORNIA.

REV	DATE	BY	APP	REG NO	EXPIRES	SEAL HOLDER	DESCRIPTION

DESIGNED BY: Z. MACDONELL
DRAWN BY: B. HOEGER
CHECKED BY: A. MULL
IN CHARGE: T. KIM
DATE: 2/21/2025

REGISTERED PROFESSIONAL ENGINEER — No. ____ Exp. ____ CIVIL — STATE OF CALIFORNIA

Metro

LOS ANGELES COUNTY
METROPOLITAN TRANSPORTATION AUTHORITY

HDR ENGINEERING
350 S. GRAND AVENUE
SUITE 2900
LOS ANGELES, CA 90071
(213) 239-5800

LINK UNION STATION PROJECT
CONSTRUCTION SCHEMATICS
EXISTING CONDITION

CONTRACT NO:
DRAWING NO: SC-001
REV:
SCALE: NO SCALE
SHEET NO: 2

Preliminary

$FILE$
Plot Driver=$PLTDRV$$ Pentable=PlotStamp USER = MESQUER 2:48:48 PM 2/20/2025

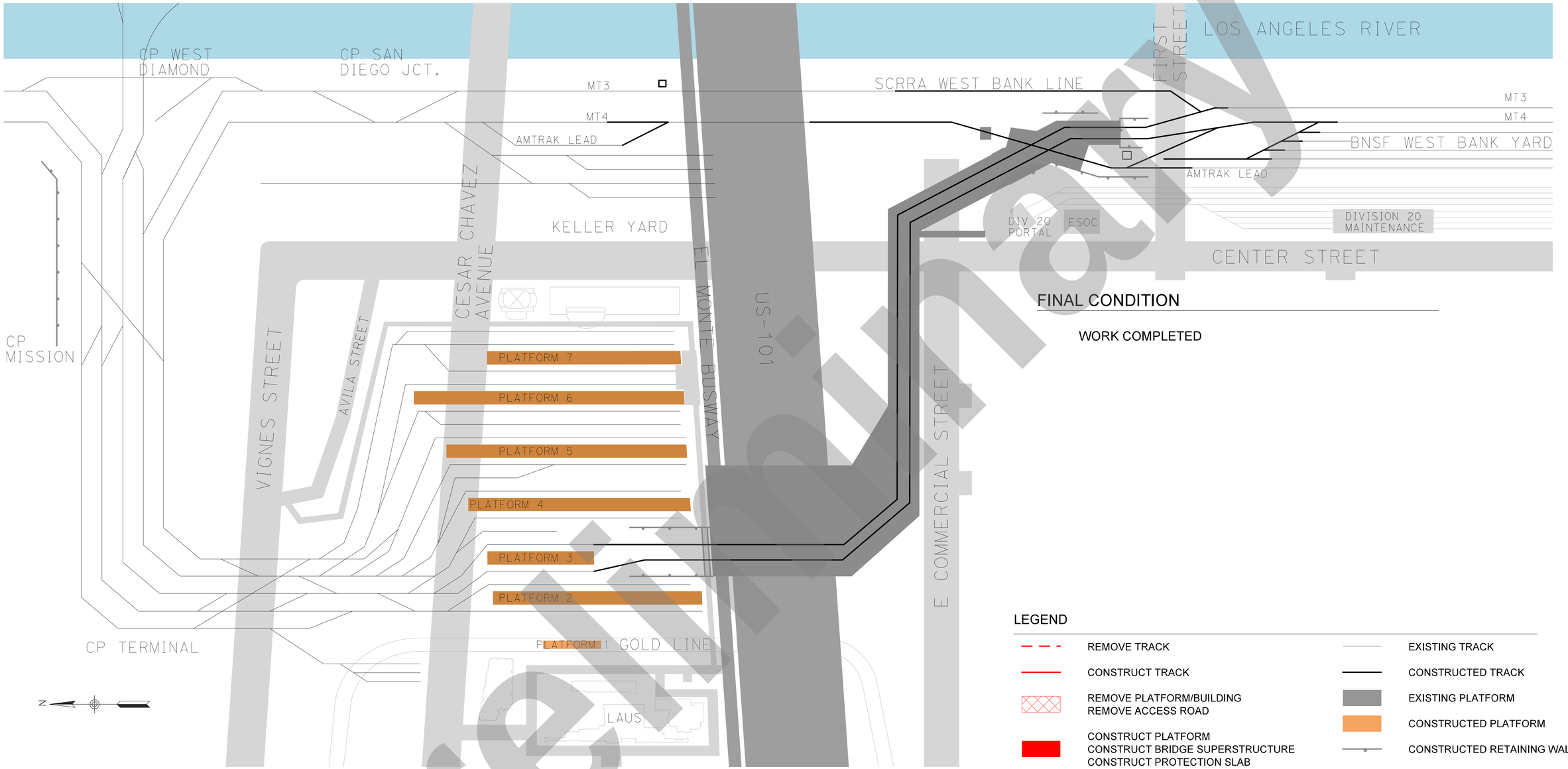

FINAL CONDITION

WORK COMPLETED

NOTES:

1. DRAWINGS ARE FOR REFERENCE ONLY AND REPRESENT ONE HIGH-LEVEL FEASIBLE CONSTRUCTION SEQUENCE FOR THE PROJECT.
2. FOR DETAILED US-101 CONSTRUCTION STAGING SEE US-101 ROADWAY STAGING DRAWINGS AND EXHIBITS.
3. WORK SHOWN ON SC-010 THROUGH SC-024 HAS BEEN SEPERATED BY LOCATION (EAST AREA AND WEST AREA). WORK IN EACH AREA IS ASSUMED TO OCCUR INDEPENDANT FROM WORK IN THE OTHER AREA UNLESS OTHERWISE NOTED.
4. COMPLETION OF WORK SHOWN ON SC-002 THROUGH SC-024 IS ASSUMED TO BE REQUIRED TO PERFORM WORK SHOWN ON SC-025 AND SC-026

LEGEND

REMOVE TRACK	EXISTING TRACK
CONSTRUCT TRACK	CONSTRUCTED TRACK
REMOVE PLATFORM/BUILDING REMOVE ACCESS ROAD	EXISTING PLATFORM
CONSTRUCT PLATFORM CONSTRUCT BRIDGE SUPERSTRUCTURE CONSTRUCT PROTECTION SLAB	CONSTRUCTED PLATFORM CONSTRUCTED RETAINING WALL
CONSTRUCT RETAINING WALL	CONSTRUCTED BRIDGE CONSTRUCTED PROTECTION SLAB
CONSTRUCT BRIDGE SUBSTRUCTURE	CONSTRUCTED ACCESS ROAD
CONSTRUCT ACCESS ROAD	
HIGHWAY MODIFICATIONS	
OVEREXCAVATION	

NOT FOR CONSTRUCTION

THE PREPARATION OF THIS DRAWING HAS BEEN FINANCED IN PART THROUGH A GRANT FROM THE U.S. DEPARTMENT OF TRANSPORTATION, FEDERAL TRANSIT ADMINISTRATION (FTA), UNDER THE FEDERAL TRANSIT ACT OF 1964, AS AMENDED, AND IN PART BY THE TAXES OF THE CITIZENS OF LOS ANGELES COUNTY AND OF THE STATE OF CALIFORNIA.

REV	DATE	BY	APP	REG NO	EXPIRES	SEAL HOLDER	DESCRIPTION

DESIGNED BY	Z. MACDONELL
DRAWN BY	B. HOEGER
CHECKED BY	A. MULL
IN CHARGE	T. KIM
DATE	2/21/2025

Metro
LOS ANGELES COUNTY METROPOLITAN TRANSPORTATION AUTHORITY
HDR ENGINEERING
350 S. GRAND AVENUE SUITE 2900 LOS ANGELES, CA 90071 (213) 239-5800

LINK UNION STATION PROJECT
CONSTRUCTION SCHEMATICS
FINAL CONDITION

CONTRACT NO	PS2415-3172
DRAWING NO	SC-027
REV	0
SCALE	NO SCALE
SHEET NO	3

Preliminary

$FILE$
2/20/2025
USER = MESQUER 3:12:53 PM
Pentable=PlotStamp.tbl
Plot Driver=$PLTDRV$$

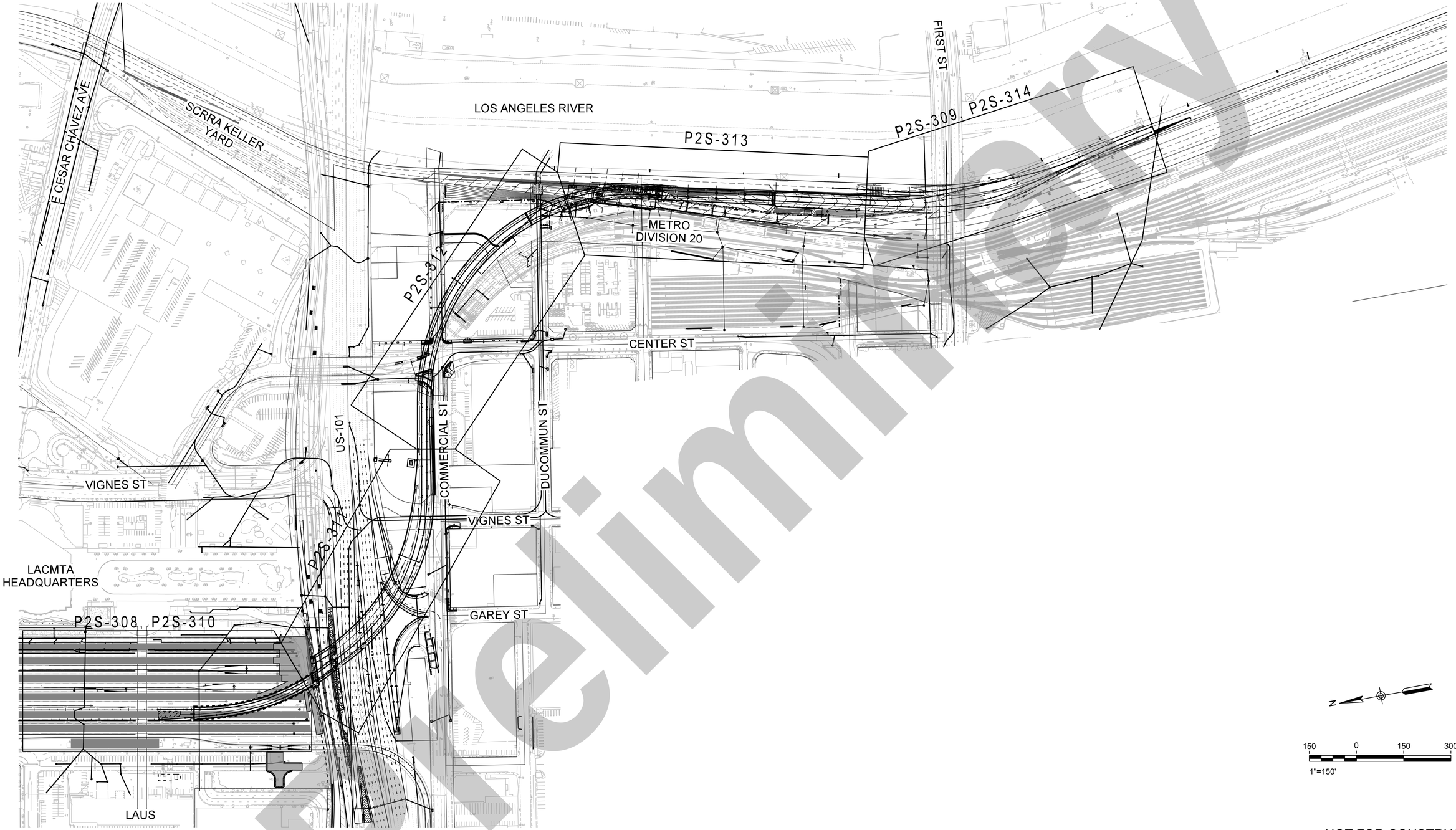

Preliminary

N

150 0 150 300

1"=150'

NOT FOR CONSTRUCTION

THE PREPARATION OF THIS DRAWING HAS BEEN FINANCED IN PART THROUGH A GRANT FROM THE U.S. DEPARTMENT OF TRANSPORTATION, FEDERAL TRANSIT ADMINISTRATION (FTA), UNDER THE FEDERAL TRANSIT ACT OF 1964, AS AMENDED, AND IN PART BY THE TAXES OF THE CITIZENS OF LOS ANGELES COUNTY AND OF THE STATE OF CALIFORNIA.

REV	DATE	BY	APP	REG NO	EXPIRES	SEAL HOLDER	DESCRIPTION

DESIGNED BY Z. MACDONELL
DRAWN BY M. ORTIZ
CHECKED BY A. MULL
IN CHARGE A. MULL
DATE 02/21/2025

Metro
LOS ANGELES COUNTY
METROPOLITAN TRANSPORTATION AUTHORITY

HDR
HDR ENGINEERING
350 S. GRAND AVENUE
SUITE 2900
LOS ANGELES, CA 90071
(213) 239-5800

LINK UNION STATION PROJECT

PHASE 2 SUPPLEMENT
TRACK
KEY MAP

CONTRACT NO PS2415-3172
DRAWING NO TK-401-P2S
REV 0
SCALE HORIZ: 1"=150'
SHEET NO 4

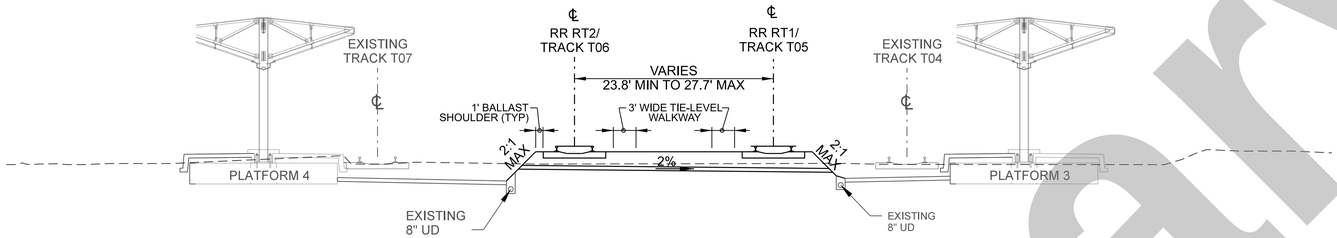

SECTION BETWEEN NORTHERLY FILL RAMP AND PLATFORM 3 (A-A)

NO SCALE

RUN THROUGH 2 STA 107+58 TO 108+01

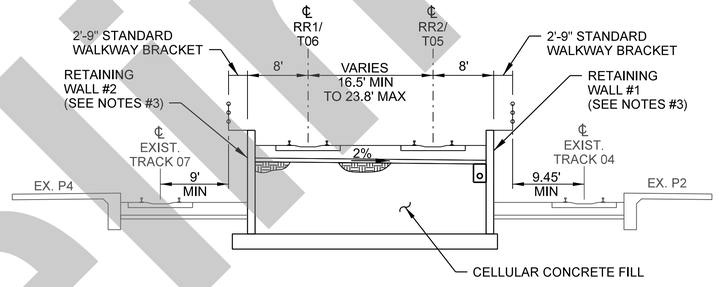

SECTION AT NORTHERLY RUN THROUGH FILL RAMP (B-B)

NO SCALE

RUN THROUGH 2 STA 108+01 TO 112+03

CONSTRUCTION NOTES:

1. PROTECT THE EXISTING TRACKS IN PLACE AT ALL TIMES, UNLESS OTHERWISE NOTED.
2. BALLAST DEPTH 12" MINIMUM
   SUBBALLAST DEPTH 6" MINIMUM.

NOTES:

1. SEE UTILITY PLANS FOR EXISTING UTILITIES.
2. SEE DRAINAGE PLANS FOR DRAINAGE RELATED WORK.
3. SEE EARLY WORKS PACKAGE 3 ON-SITE STRUCTURES PLANS FOR ADDITIONAL DETAILS RELATED TO THE RETAINED FILL RAMP.
4. SEE EARLY WORKS PACKAGE 3 A1 AND A2 TRACK MODIFICATION PLANS FOR ADDITIONAL DETAILS RELATED TO TRACK MODIFICATION AT LAUS.
5. SEE EARLY WORKS PACKAGE 3 STATION ARCHITECTURAL PLANS FOR PLATFORM RELATED WORK AT LAUS.
6. SEE PHASE 2 SUPPLEMENT VIADUCT STRUCTURAL PLANS FOR SECTIONS ON THE RUN-THROUGH VIADUCT.

Preliminary

NOT FOR CONSTRUCTION

THE PREPARATION OF THIS DRAWING HAS BEEN FINANCED IN PART THROUGH A GRANT FROM THE U.S. DEPARTMENT OF TRANSPORTATION, FEDERAL TRANSIT ADMINISTRATION (FTA), UNDER THE FEDERAL TRANSIT ACT OF 1964, AS AMENDED, AND IN PART BY THE TAXES OF THE CITIZENS OF LOS ANGELES COUNTY AND OF THE STATE OF CALIFORNIA.

REV	DATE	BY	APP	REG NO	EXPIRES	SEAL HOLDER	DESCRIPTION

DESIGNED BY: Z. MACDONELL
DRAWN BY: M. SHAHIN
CHECKED BY: A. MULL
IN CHARGE: T. KIM
DATE: 02/21/2025

Metro
LOS ANGELES COUNTY
METROPOLITAN TRANSPORTATION AUTHORITY

HDR ENGINEERING
350 S. GRAND AVENUE
SUITE 2900
LOS ANGELES, CA 90071
(213) 239-5800

SUBMITTED: _____ PROJECT MANAGER

APPROVED: _____

LINK UNION STATION PROJECT

TRACK DRAWINGS
TRACK
TYPICAL SECTIONS
SHEET 1 OF 3

CONTRACT NO: PS2415-3172
DRAWING NO: TS-401-P2S
REV: 0
SCALE: NTS
SHEET NO: 5

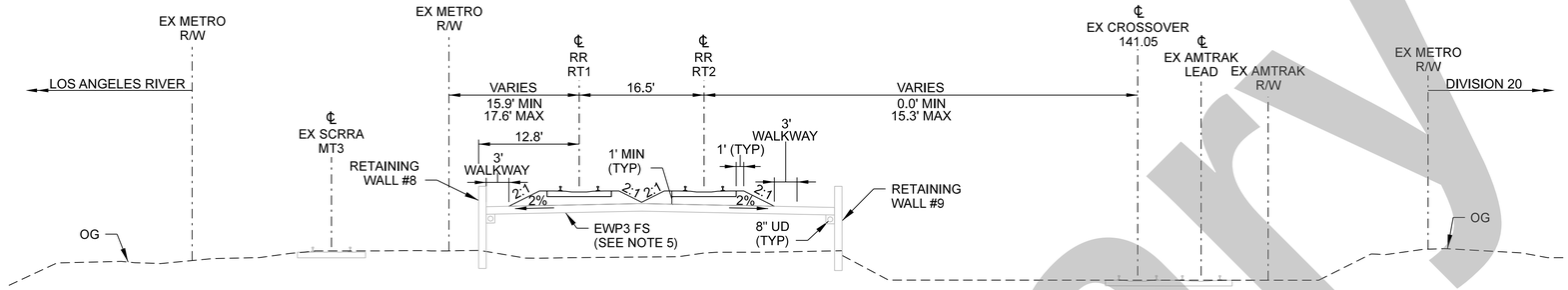

SECTION AT RUN THROUGH RETAINING WALL (C-C)

NO SCALE

RUN THROUGH 2 STA 137+11 TO 138+50

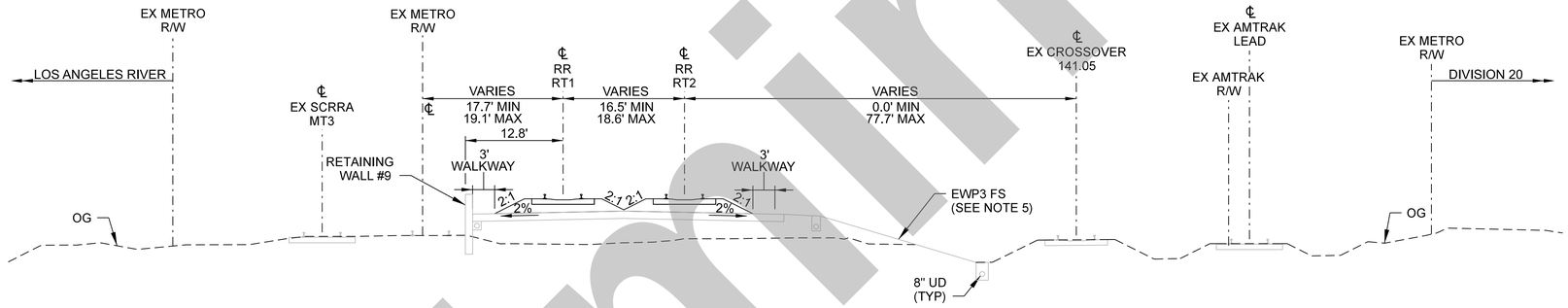

SECTION AT RUN THROUGH DECLINE (D-D)

NO SCALE

RUN THROUGH 2 STA 138+50 TO 141+00

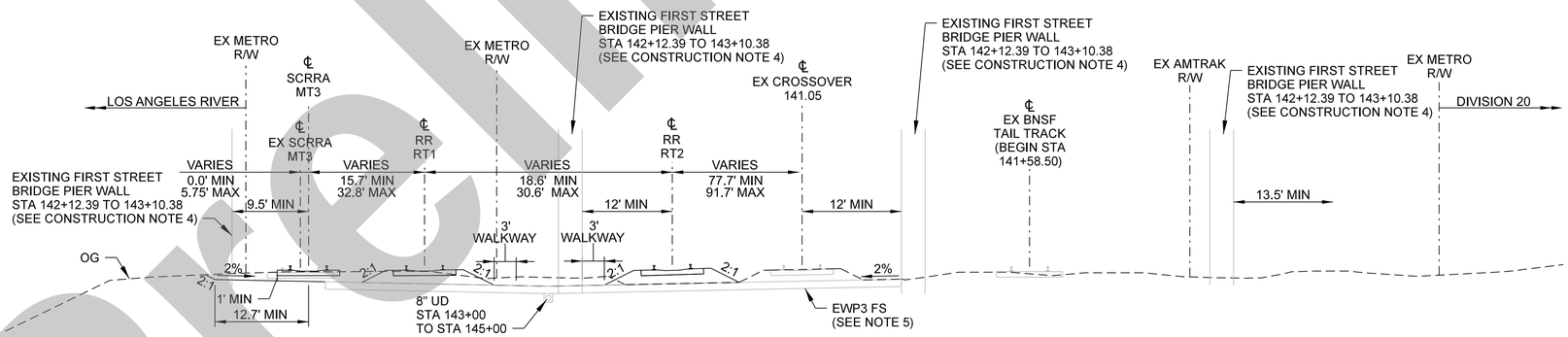

SECTION AT RUN THROUGH (E-E)

NO SCALE

RUN THROUGH 2 STA 141+00 TO 145+00

CONSTRUCTION NOTES:

1. PROTECT EXISTING TRACKS IN PLACE AT ALL TIMES UNLESS OTHERWISE
2. BALLAST DEPTH 12" MINIMUM SUBBALLAST DEPTH 6" MINIMUM
3. FROM STA 102+10 TO 102+90 JOIN EXISTING SUBBALLAST 10' EAST OF MT-3
4. VERTICAL CLEARANCES TO BOTTOM OF FIRST STREET BRIDGE MATCH EXISTING CLEARANCE UNLESS NOTED OTHERWISE.

NOTES:

1. SEE UTILITY PLANS FOR EXISTING UTILITIES
2. SEE DRAINAGE PLANS FOR DRAINAGE RELATED WORK
3. SEE SIGNAL PLANS FOR SIGNAL RELATED WORK
4. SEE EARLY WORKS PACKAGE 3 RETAINING WALL PLANS FOR RETAINING WALL RELATED WORK
5. SEE EARLY WORKS PACKAGE 3 AMTRAK LEAD AND WEST SHOOFLY PLANS FOR ADDITIONAL DETAILS AND DIMENSIONS RELATED TO THE REALIGNED AMTRAK LEAD, TEMPORARY WEST SHOOFLY AND WEST BANK GRADING.
6. SEE PHASE 2 SUPPLEMENT VIADUCT STRUCTURAL PLANS FOR SECTIONS ON THE RUN-THROUGH VIADUCT

Preliminary

NOT FOR CONSTRUCTION

THE PREPARATION OF THIS DRAWING HAS BEEN FINANCED IN PART THROUGH A GRANT FROM THE U.S. DEPARTMENT OF TRANSPORTATION, FEDERAL TRANSIT ADMINISTRATION (FTA), UNDER THE FEDERAL TRANSIT ACT OF 1964, AS AMENDED, AND IN PART BY THE TAXES OF THE CITIZENS OF LOS ANGELES COUNTY AND OF THE STATE OF CALIFORNIA.

REV	DATE	BY	APP	REG NO	EXPIRES	SEAL HOLDER	DESCRIPTION

DESIGNED BY Z. MACDONELL
DRAWN BY M. ORTIZ
CHECKED BY A. MULL
IN CHARGE A. MULL
DATE 02/21/2025

Metro
LOS ANGELES COUNTY METROPOLITAN TRANSPORTATION AUTHORITY
HDR ENGINEERING
350 S. GRAND AVENUE SUITE 2900 LOS ANGELES, CA 90071 (213) 239-5800

LINK UNION STATION PROJECT

PHASE 2 SUPPLEMENT
TRACK
TYPICAL SECTIONS
SHEET 2 OF 3

CONTRACT NO PS2415-3172
DRAWING NO TS-402-P2S
REV 0
SCALE NTS
SHEET NO 6

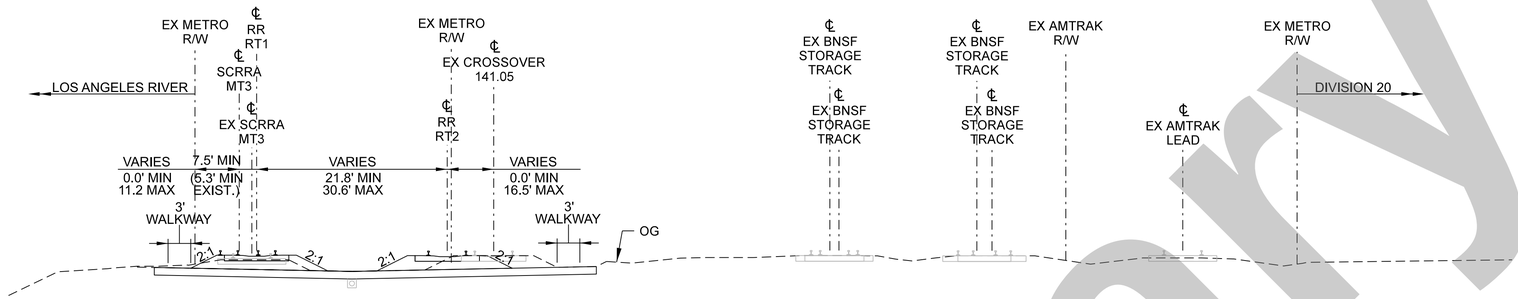

SECTION AT RUN THROUGH TRACK

NO SCALE

RUN THROUGH 2 STA 145+00 TO 147+00

F-F

-

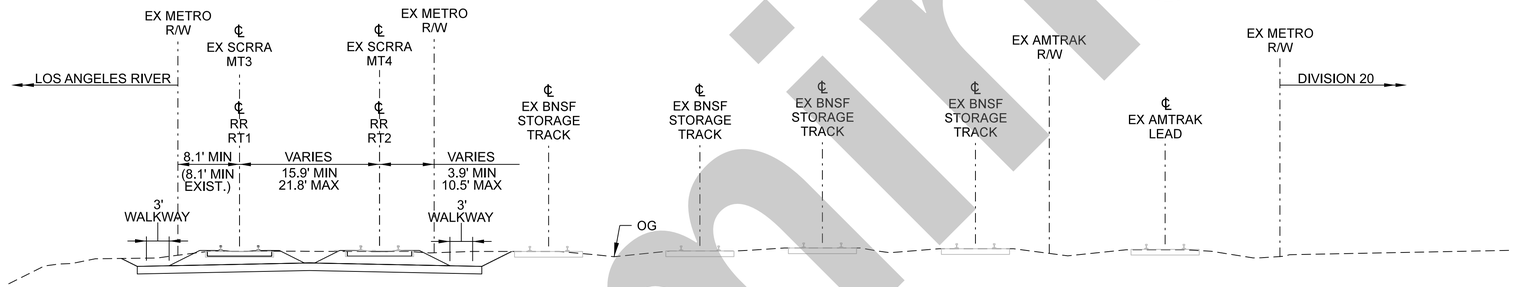

SECTION AT RUN THROUGH TRACK

NO SCALE

RUN THROUGH 2 STA 147+00 TO 149+37.91

G-G

-

CONSTRUCTION NOTES:

1. PROTECT THE EXISTING TRACKS AT ALL TIMES UNLESS NOTED OTHERWISE
2. BALLAST DEPTH 12" MINIMUM SUBBALLAST DEPTH 6" MINIMUM
3. FROM STA 102+10 TO 102+90 JOIN EXISTING SUBBALLAST 10' EAST OF MT-3

NOTES:

1. SEE UTILITY PLANS FOR EXISTING UTILITIES
2. SEE DRAINAGE PLANS FOR DRAINAGE RELATED WORK
3. SEE SIGNAL PLANS FOR SIGNAL RELATED WORK
4. SEE EARLY WORKS PACKAGE 3 AMTRAK LEAD AND WEST SHOOFLY PLANS FOR ADDITIONAL DETAILS AND DIMENSIONS RELATED TO THE REALIGNED AMTRAK LEAD AND TEMPORARY WEST SHOOFLY

Preliminary

NOT FOR CONSTRUCTION

THE PREPARATION OF THIS DRAWING HAS BEEN FINANCED IN PART THROUGH A GRANT FROM THE U.S. DEPARTMENT OF TRANSPORTATION, FEDERAL TRANSIT ADMINISTRATION (FTA), UNDER THE FEDERAL TRANSIT ACT OF 1964, AS AMENDED, AND IN PART BY THE TAXES OF THE CITIZENS OF LOS ANGELES COUNTY AND OF THE STATE OF CALIFORNIA.

REV	DATE	BY	APP	REG NO	EXPIRES	SEAL HOLDER	DESCRIPTION

DESIGNED BY Z. MACDONELL
DRAWN BY M. ORTIZ
CHECKED BY A. MULL
IN CHARGE A. MULL
DATE 02/21/2025

Metro
LOS ANGELES COUNTY METROPOLITAN TRANSPORTATION AUTHORITY
HDR ENGINEERING
350 S. GRAND AVENUE SUITE 2900 LOS ANGELES, CA 90071 (213) 239-5800

LINK UNION STATION PROJECT

TRACK DRAWINGS - EAST AREA 2
TRACK
TYPICAL SECTIONS
SHEET 3 OF 3

CONTRACT NO PS2415-3172
DRAWING NO TS-403-P2S
REV 0
SCALE NTS
SHEET NO 7

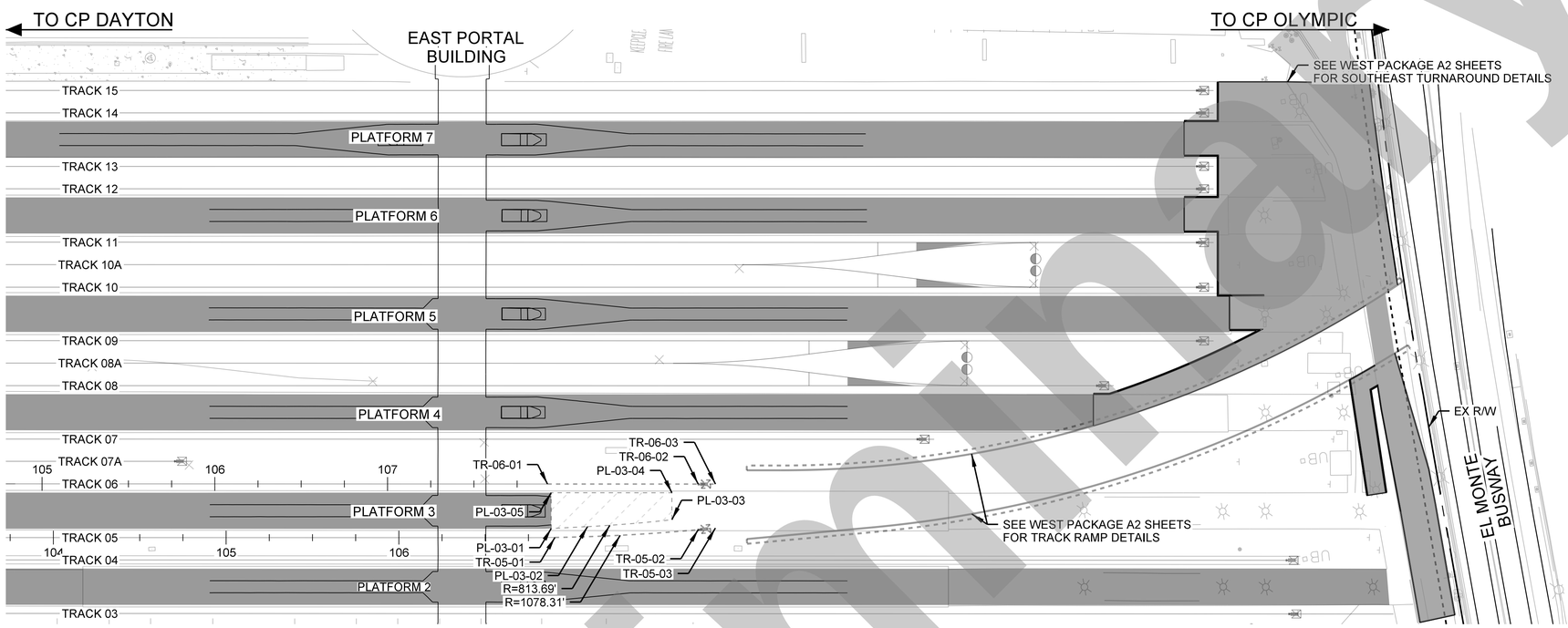

LEGEND:

- EXISTING PLATFORM
- PLATFORM, WALKWAY, AND ROADWAY MODIFICATIONS
- PLATFORM REMOVAL
- EXISTING TRACK
- TRACK REMOVAL

NOTES:

1. SEE UTILITY PLANS FOR EXISTING AND PROPOSED UTILITIES
2. SEE DRAINAGE PLANS FOR DRAINAGE RELATED WORK
3. SEE STRUCTURES PLANS FOR BRIDGE, RETAINING WALL, AND PROTECTION SLAB WORK
4. SEE ROADWAY PLANS FOR ROADWAY RELATED WORK
5. SEE STATION ARCHITECTURAL AND SUPPORTING DISCIPLINE PLANS FOR STATION RELATED WORK
6. SEE ON-SITE STATION CIVIL PLANS FOR ON-SITE CIVIL RELATED WORK
7. SEE CALTRANS PLANS FOR US-101 HIGHWAY RELATED WORK
8. SEE ON-SITE STRUCTURAL PLANS FOR ON-SITE STRUCTURAL RELATED WORK

N

40 0 40 80

1"=40'

TRACK REMOVAL POINT TABLE

TRACK	POINT #	NORTHING	EASTING	DESCRIPTION	BEARING	REMOVAL
TRACK 05	TR-05-01	1842702.9540	6490610.0856	BEGIN TRACK REMOVAL	----------	83 TF
	TR-05-02	1842620.5348	6490599.8310	BUMPING POST REMOVAL	S04°53'07"W	10 TF
	TR-05-03	1842610.5712	6490598.9794	END TRACK REMOVAL		
TRACK 06	TR-06-01	1842701.7039	6490641.2999	BEGIN TRACK REMOVAL	S10°12'31"W	97 TF
	TR-06-02	1842615.8512	6490625.8391	BUMPING POST REMOVAL		
	TR-06-03	1842606.0095	6490624.0667	END TRACK REMOVAL		

PLATFORM DEMOLITION POINT TABLE

POINT #	NORTHING	EASTING	DESCRIPTION	AREA
PL-03-01	1842704.1419	6490615.5726	PLATFORM 03	1,296 SF
PL-03-02	1842683.2568	6490612.9211	PLATFORM 03	
PL-03-03	1842634.4792	6490608.2159	PLATFORM 03	
PL-03-04	1842631.7275	6490623.5777	PLATFORM 03	
PL-03-05	1842700.4935	6490635.9716	PLATFORM 03	

NOT FOR CONSTRUCTION

Preliminary

THE PREPARATION OF THIS DRAWING HAS BEEN FINANCED IN PART THROUGH A GRANT FROM THE U.S. DEPARTMENT OF TRANSPORTATION, FEDERAL TRANSIT ADMINISTRATION (FTA), UNDER THE FEDERAL TRANSIT ACT OF 1964, AS AMENDED, AND IN PART BY THE TAXES OF THE CITIZENS OF LOS ANGELES COUNTY AND OF THE STATE OF CALIFORNIA.

REV	DATE	BY	APP	REG NO	EXPIRES	SEAL HOLDER	DESCRIPTION

DESIGNED BY Z. MACDONELL
DRAWN BY M. ORTIZ
CHECKED BY A. MULL
IN CHARGE A. MULL
DATE 02/21/2025

Metro

LOS ANGELES COUNTY METROPOLITAN TRANSPORTATION AUTHORITY

HDR ENGINEERING
350 S. GRAND AVENUE
SUITE 2900
LOS ANGELES, CA 90071
(213) 239-5800

LINK UNION STATION PROJECT

PHASE 2 SUPPLEMENT

TRACK
REMOVAL PLAN AND NOTES
SHEET 1 OF 2

CONTRACT NO PS2415-3172
DRAWING NO TR-401-P2S
REV 0
SCALE AS NOTED
SHEET NO 8

Preliminary

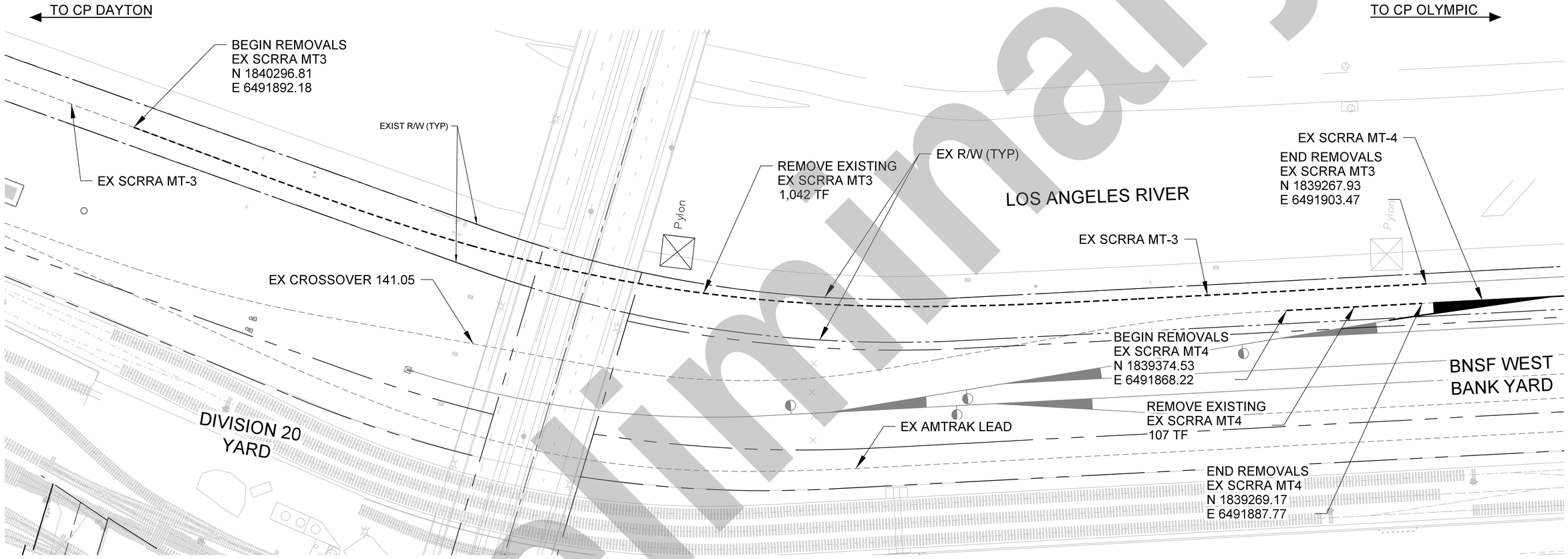

N

HORIZONTAL
40 0 40 80
1"=40'

VERTICAL
10 0 10 20
1"=10'

NOT FOR CONSTRUCTION

THE PREPARATION OF THIS DRAWING HAS BEEN FINANCED IN PART THROUGH A GRANT FROM THE U.S. DEPARTMENT OF TRANSPORTATION, FEDERAL TRANSIT ADMINISTRATION (FTA), UNDER THE FEDERAL TRANSIT ACT OF 1964, AS AMENDED, AND IN PART BY THE TAXES OF THE CITIZENS OF LOS ANGELES COUNTY AND OF THE STATE OF CALIFORNIA.

REV	DATE	BY	APP	REG NO	EXPIRES	SEAL HOLDER	DESCRIPTION

DESIGNED BY Z. MACDONELL
DRAWN BY M. ORTIZ
CHECKED BY A. MULL
IN CHARGE A. MULL
DATE 02/21/2025

Metro
LOS ANGELES COUNTY
METROPOLITAN TRANSPORTATION AUTHORITY

HDR
HDR ENGINEERING
350 S. GRAND AVENUE
SUITE 2900
LOS ANGELES, CA 90071
(213) 239-5800

LINK UNION STATION PROJECT

PHASE 2 SUPPLEMENT
TRACK
REMOVAL PLAN AND NOTES
SHEET 2 OF 2

CONTRACT NO PS2415-3172
DRAWING NO TR-402-P2S
REV 0
SCALE 1"=40'
SHEET NO 9

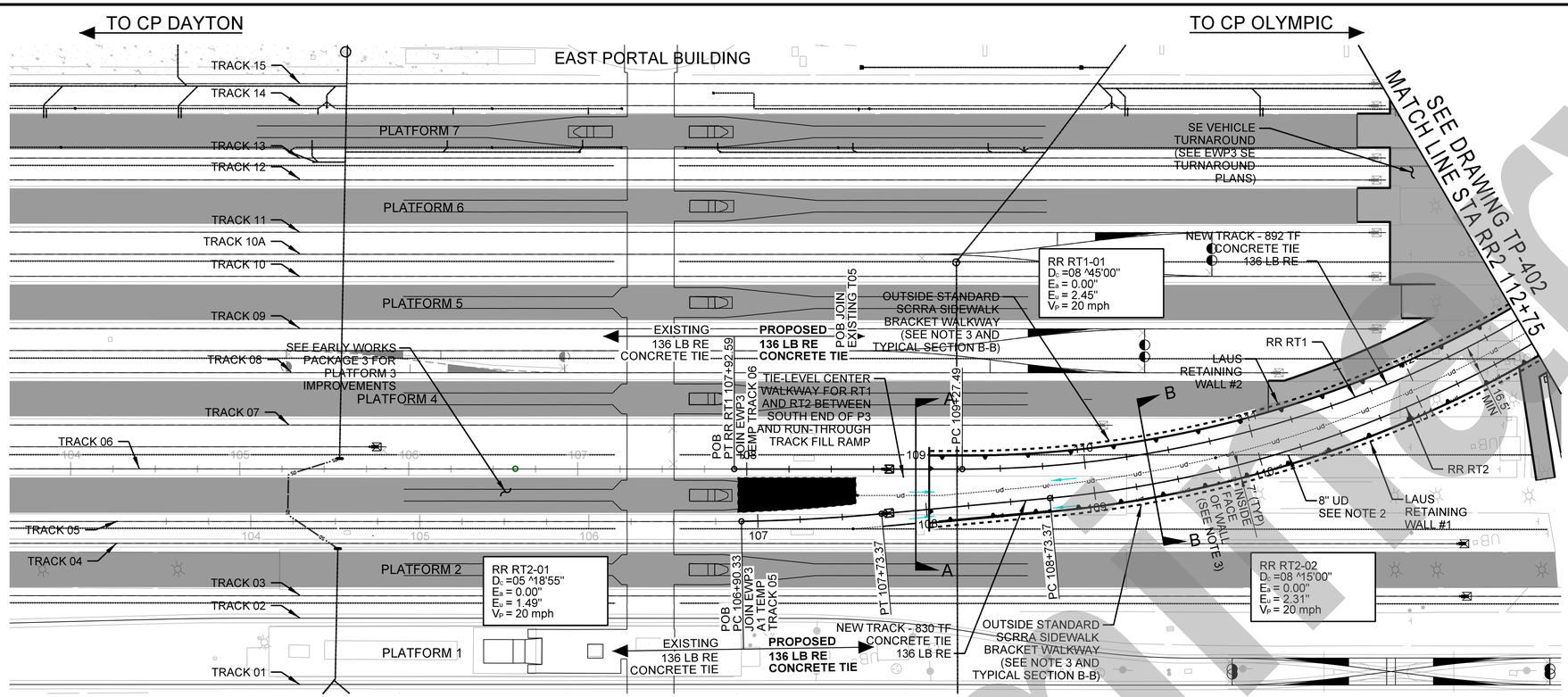

NOTES:

1. SEE UTILITY PLANS FOR EXISTING AND PROPOSED UTILITIES.
2. SEE DRAINAGE PLANS FOR DRAINAGE RELATED WORK.
3. SEE EARLY WORKS PACKAGE 3 ON-SITE RETAINING WALL PLANS FOR ADDITIONAL DETAILS RELATED TO THE RETAINED FILL RAMP.
4. SEE EARLY WORKS PACKAGE 3 A1 AND A2 TRACK MODIFICATION PLANS FOR ADDITIONAL DETAILS RELATED TO TRACK MODIFICATIONS AT LAUS.
5. SEE EARLY WORKS PACKAGE 3 STATION ARCHITECTURAL, ON-SITE STRUCTURAL, AND ON-SITE CIVIL PLANS FOR STATION RELATED WORK AT LAUS.
6. SEE PHASE 2 SUPPLEMENT VIADUCT STRUCTURAL PLANS FOR SECTIONS ON THE RUN-THROUGH VIADUCT.
7. FOR RR RT1 PROFILE AT LAUS SEE TP-407. FOR RR RT-1 PROFILE SOUTH OF FIRST STREET SEE TP-406. RR RT1 PROFILE MATCHES RR RT2 ALONG VIADUCT LIMITS, SEE TP-402 TO TP-405 FOR ADDITIONAL INFORMATION RELATED TO TRACK TOR PROFILE.

LEGEND:

- EXISTING PLATFORM
- EXISTING TRACK
- EXISTING STORMDRAIN
- EXISTING UNDERDRAIN
- PROPOSED STORMDRAIN
- PROPOSED UNDERDRAIN
- TRACK MODIFICATIONS
- PROPOSED RETAINING WALL

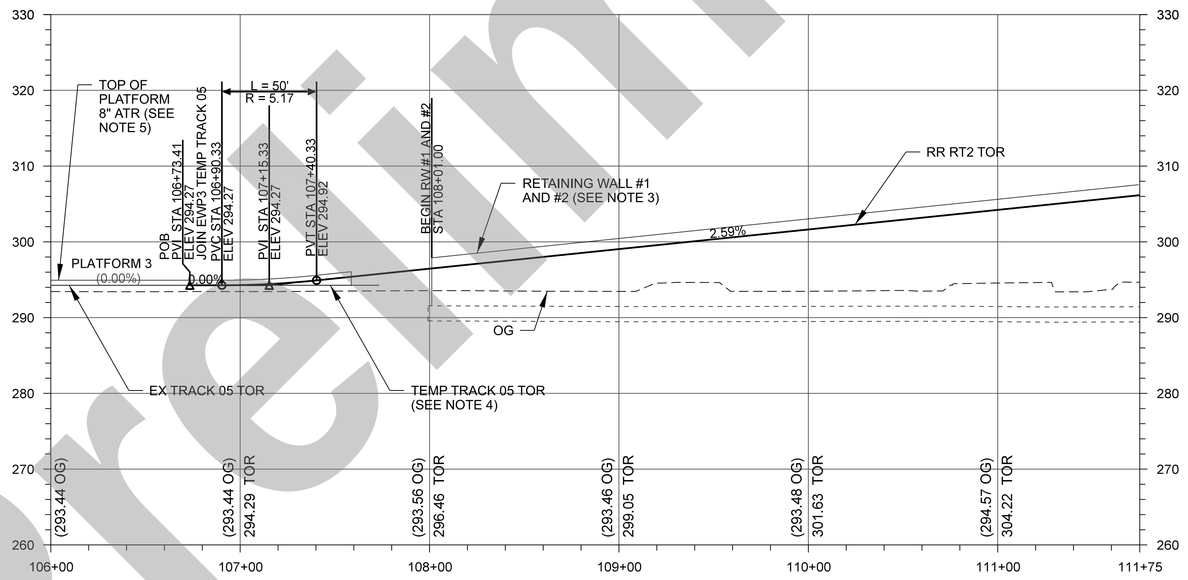

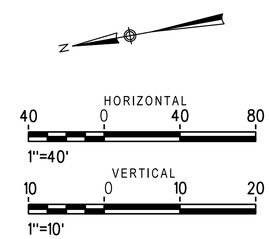

NOT FOR CONSTRUCTION

Preliminary

THE PREPARATION OF THIS DRAWING HAS BEEN FINANCED IN PART THROUGH A GRANT FROM THE U.S. DEPARTMENT OF TRANSPORTATION, FEDERAL TRANSIT ADMINISTRATION (FTA), UNDER THE FEDERAL TRANSIT ACT OF 1964, AS AMENDED, AND IN PART BY THE TAXES OF THE CITIZENS OF LOS ANGELES COUNTY AND OF THE STATE OF CALIFORNIA.

REV	DATE	BY	APP	REG NO	EXPIRES	SEAL HOLDER	DESCRIPTION

DESIGNED BY: Z. MACDONELL
DRAWN BY: M. ORTIZ
CHECKED BY: A. MULL
IN CHARGE: A. MULL
DATE: 02/21/2025

Metro
LOS ANGELES COUNTY
METROPOLITAN TRANSPORTATION AUTHORITY

HDR
HDR ENGINEERING
350 S. GRAND AVENUE
SUITE 2900
LOS ANGELES, CA 90071
(213) 239-5800

LINK UNION STATION PROJECT

PHASE 2 SUPPLEMENT
TRACK
PLAN AND PROFILE
RT2 STA 106+73.41 TO 112+75

CONTRACT NO: PS2415-3172
DRAWING NO: TP-401-P2S
REV: 0
SCALE: HORIZ: 1"=40' VERT: 1"=10'
SHEET NO: 10

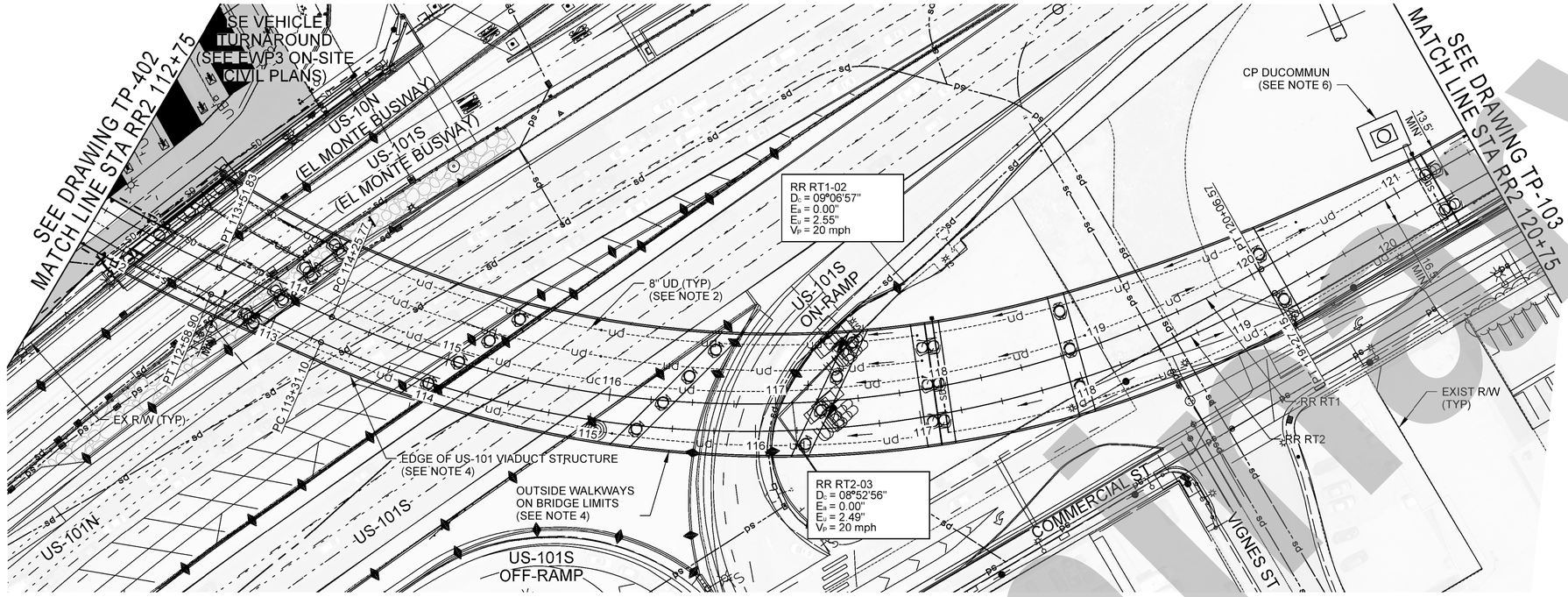

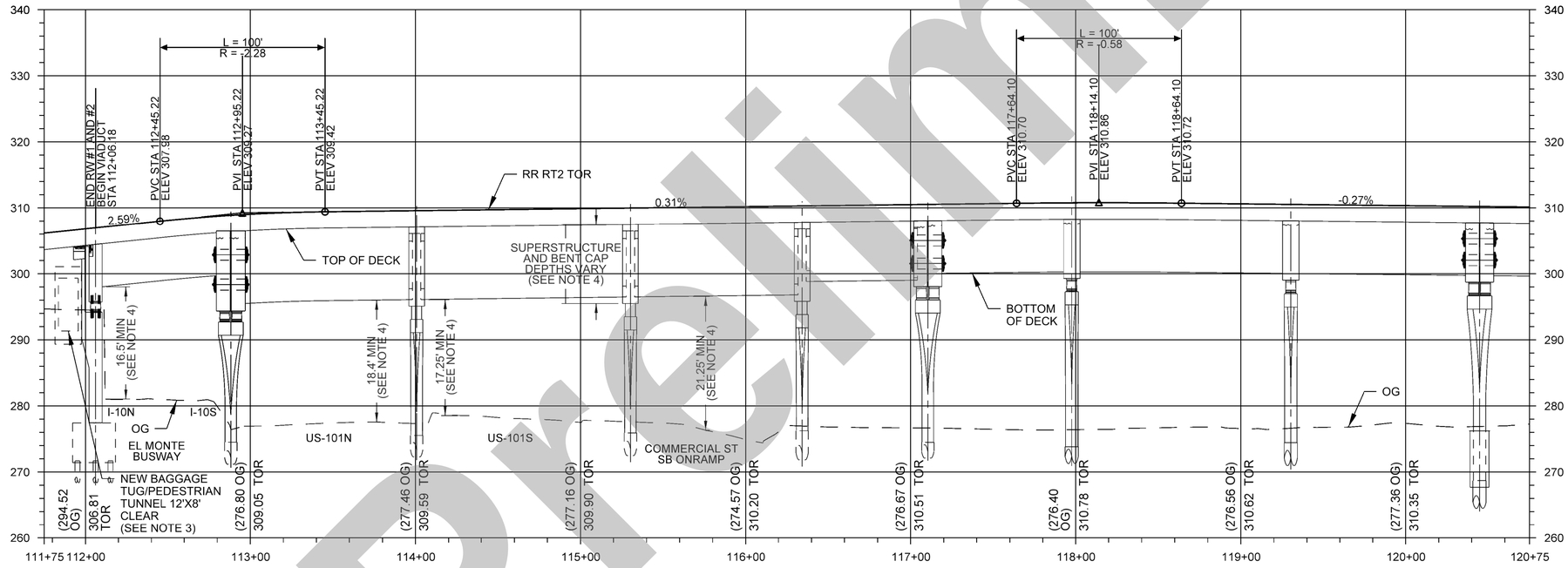

NOTES:

1. SEE UTILITY PLANS FOR EXISTING AND PROPOSED UTILITIES.
2. SEE DRAINAGE PLANS FOR DRAINAGE RELATED WORK.
3. SEE EARLY WORKS PACKAGE 3 ON-SITE STRUCTURAL PLANS FOR ADDITIONAL DETAILS RELATED TO THE NEW BAGGAGE TUG/PEDESTRIAN TUNNEL AND RW #1 AND #2.
4. RUN-THROUGH VIADUCT SUBSTRUCTURES SIZES AND LOCATIONS SHOWN ARE FOR REFERENCE AND ARE APPROXIMATE, SEE PHASE 2 SUPPLEMENT VIADUCT STRUCTURAL PLANS FOR DETAILS RELATED TO THE RUN-THROUGH VIADUCT.
5. SEE PHASE 2 SUPPLEMENT COMMERCIAL/CENTER STREET MODIFCATION PLANS FOR ROADWAY RELATED WORK.
6. SEE PHASE 2 SUPPLEMENT TRACK SIGNAL DRAWINGS FOR SIGNAL RELATED WORK IN THIS PHASE.

LEGEND:

- EXISTING PLATFORM
- EXISTING TRACK
- EXISTING STORMDRAIN (sd)
- EXISTING UNDERDRAIN (ud)
- PROPOSED STORMDRAIN (SD)
- PROPOSED UNDERDRAIN (UD)
- TRACK MODIFICATIONS
- PROPOSED RETAINING WALL

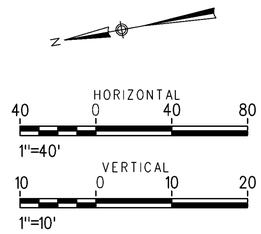

NOT FOR CONSTRUCTION

Preliminary

THE PREPARATION OF THIS DRAWING HAS BEEN FINANCED IN PART THROUGH A GRANT FROM THE U.S. DEPARTMENT OF TRANSPORTATION, FEDERAL TRANSIT ADMINISTRATION (FTA), UNDER THE FEDERAL TRANSIT ACT OF 1964, AS AMENDED, AND IN PART BY THE TAXES OF THE CITIZENS OF LOS ANGELES COUNTY AND OF THE STATE OF CALIFORNIA.

REV	DATE	BY	APP	REG NO	EXPIRES	SEAL HOLDER	DESCRIPTION

DESIGNED BY: Z. MACDONELL
DRAWN BY: M. ORTIZ
CHECKED BY: A. MULL
IN CHARGE: A. MULL
DATE: 02/21/2025

Metro
LOS ANGELES COUNTY METROPOLITAN TRANSPORTATION AUTHORITY
HDR ENGINEERING
350 S. GRAND AVENUE SUITE 2900 LOS ANGELES, CA 90071 (213) 239-5800

LINK UNION STATION PROJECT

PHASE 2 SUPPLEMENT
TRACK
PLAN AND PROFILE
RT2 STA 112+75 TO 120+75

CONTRACT NO: PS2415-3172
DRAWING NO: TP-402-P2S
REV: 0
SCALE: HORIZ: 1"=40' VERT: 1"=10'
SHEET NO: 11

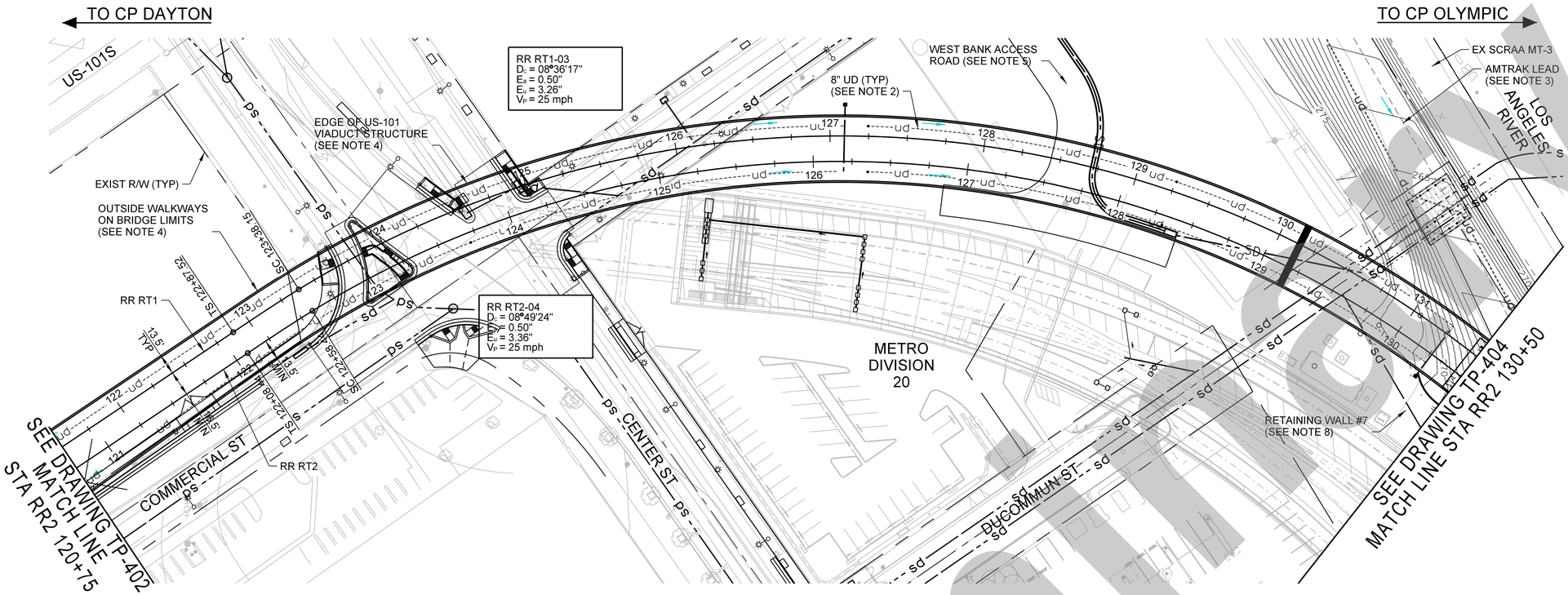

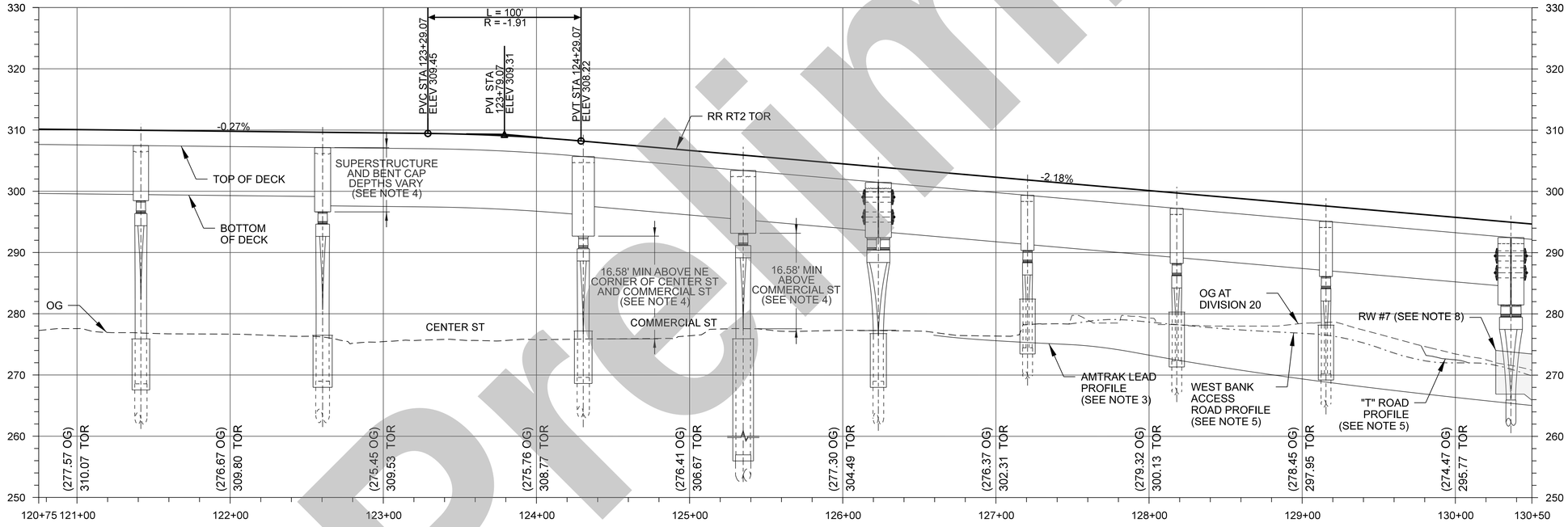

NOTES:

1. SEE UTILITY PLANS FOR EXISTING UTILITIES.
2. SEE DRAINAGE PLANS FOR DRAINAGE RELATED WORK.
3. SEE EARLY WORKS PACKAGE 3 AMTRAK LEAD AND WEST SHOOFLY PLANS FOR ADDITIONAL DETAILS AND DIMENSIONS RELATED TO THE REALIGNED AMTRAK LEAD, TEMPORARY WEST SHOOFLY AND WEST BANK GRADING.
4. RUN-THROUGH VIADUCT SUBSTRUCTURE SIZES AND LOCATIONS SHOWN ARE FOR REFERENCE AND ARE APPROXIMATE, SEE PHASE 2 SUPPLEMENT VIADUCT STRUCTURAL PLANS FOR DETAILS RELATED TO THE RUN-THROUGH VIADUCT.
5. SEE EARLY WORKS PACKAGE 3 WEST BANK ACCESS ROAD PLANS FOR ACCESS ROAD RELATED WORK AND CLEARANCES.
6. SEE PHASE 2 SUPPLEMENT COMMERCIAL/CENTER STREET MODIFICATION PLANS FOR ROADWAY RELATED WORK.
7. SEE PHASE 2 SUPPLEMENT TRACK SIGNAL DRAWINGS FOR SIGNAL RELATED WORK IN THIS PHASE.
8. SEE EARLY WORKS PACKAGE 3 RETAINING WALL PLANS FOR RETAINING WALL RELATED WORK.

LEGEND:

- ROADWAY MODIFICATIONS
- EXISTING TRACK
- EXISTING STORMDRAIN
- EXISTING UNDERDRAIN
- PROPOSED STORMDRAIN
- PROPOSED UNDERDRAIN
- TRACK MODIFICATIONS
- PROPOSED RETAINING WALL

HORIZONTAL
40 0 40 80
1"=40'

VERTICAL
10 0 10 20
1"=10'

NOT FOR CONSTRUCTION

Preliminary

THE PREPARATION OF THIS DRAWING HAS BEEN FINANCED IN PART THROUGH A GRANT FROM THE U.S. DEPARTMENT OF TRANSPORTATION, FEDERAL TRANSIT ADMINISTRATION (FTA), UNDER THE FEDERAL TRANSIT ACT OF 1964, AS AMENDED, AND IN PART BY THE TAXES OF THE CITIZENS OF LOS ANGELES COUNTY AND OF THE STATE OF CALIFORNIA.

REV	DATE	BY	APP	REG NO	EXPIRES	SEAL HOLDER	DESCRIPTION

DESIGNED BY: Z. MACDONELL
DRAWN BY: M. ORTIZ
CHECKED BY: A. MULL
IN CHARGE: A. MULL
DATE: 02/21/2025

Metro
LOS ANGELES COUNTY METROPOLITAN TRANSPORTATION AUTHORITY
HDR
HDR ENGINEERING
350 S. GRAND AVENUE
SUITE 2900
LOS ANGELES, CA 90071
(213) 239-5800

LINK UNION STATION PROJECT

PHASE 2 SUPPLEMENT
TRACK
PLAN AND PROFILE
RT2 STA 120+75 TO 130+50

CONTRACT NO: PS2415-3172
DRAWING NO: TP-403-P2S
REV: 0
SCALE: HORIZ: 1"=40' VERT: 1"=10'
SHEET NO: 12

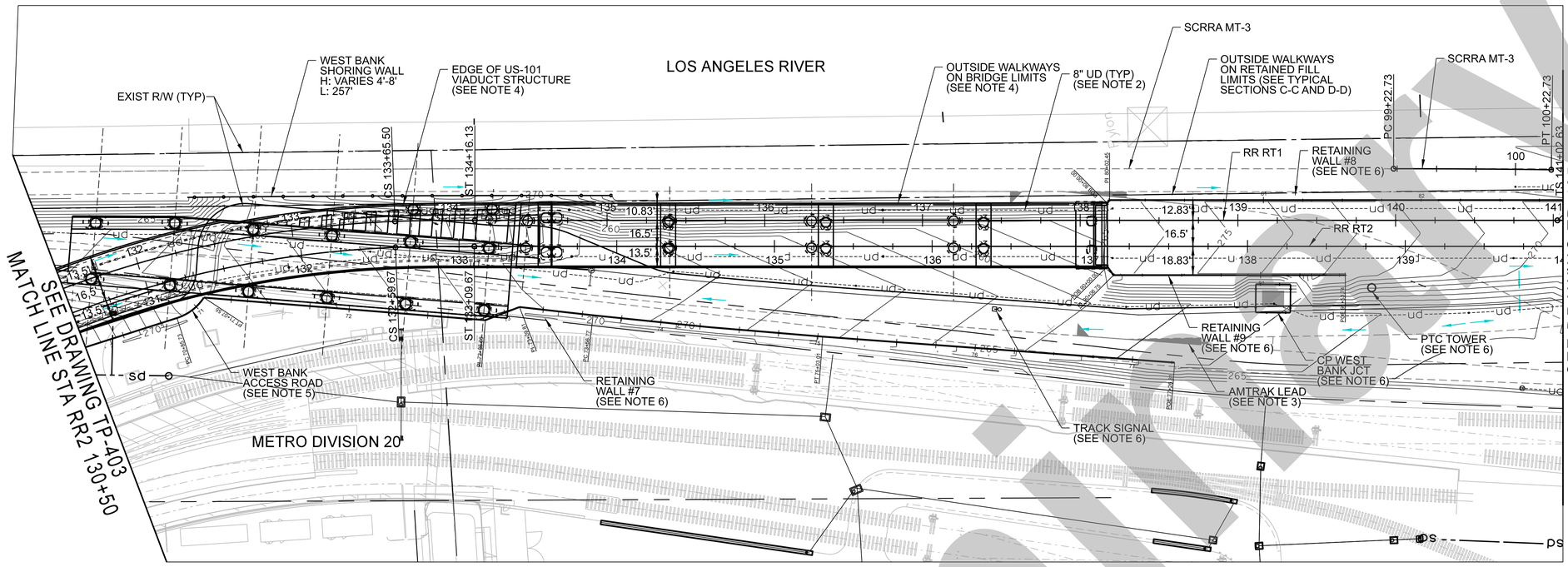

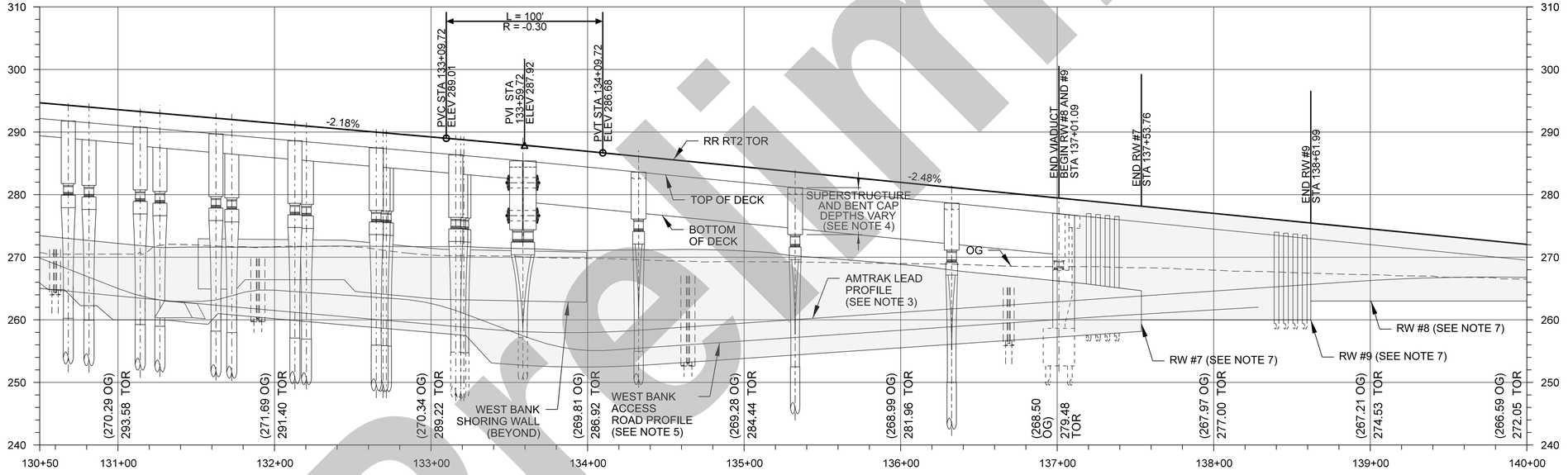

NOTES:

1. SEE UTILITY PLANS FOR EXISTING AND PROPOSED UTILITIES.
2. SEE DRAINAGE PLANS FOR DRAINAGE RELATED WORK.
3. SEE EARLY WORKS PACKAGE 3 AMTRAK LEAD AND WESTSHOOFLY PLANS FOR ADDITIONAL DETAILS AND DIMENSIONS RELATED TO THE REALIGNED AMTRAK LEAD, TEMPORARYWEST SHOOFLY AND WEST BANK GRADING.
4. RUN-THROUGH VIADUCT SUBSTRUCTURES SIZES AND LOCATIONS SHOWN ARE FOR REFERENCE AND ARE APPROXIMATE, SEE PHASE 2 SUPPLEMENT VIADUCT STRUCTURAL PLANS FOR DETAILS RELATED TO THE RUN-THROUGH VIADUCT.
5. SEE EARLY WORKS PACKAGE 3 WEST BANK ACCESS ROAD PLANS FOR ACCESS RELATED WORK AND CLEARANCES.
6. SEE PHASE 2 SUPPLEMENT TRACK SIGNAL DRAWINGS FOR SIGNAL RELATED WORK IN THIS PHASE.
7. SEE EARLY WORKS PACKAGE 3 RETAINING WALL AND PROTECTION SLAB PLANS FOR WEST BANK RETAINING WALL AND DUCOMMUN PROTECTION SLAB RELATED WORK.

LEGEND:

- ROADWAY MODIFICATIONS
- EXISTING TRACK
- EXISTING STORMDRAIN
- EXISTING UNDERDRAIN
- PROPOSED STORMDRAIN
- PROPOSED UNDERDRAIN
- TRACK MODIFICATIONS
- PROPOSED RETAINING WALL

HORIZONTAL
40 0 40 80
1"=40'

VERTICAL
10 0 10 20
1"=10'

NOT FOR CONSTRUCTION

Preliminary

THE PREPARATION OF THIS DRAWING HAS BEEN FINANCED IN PART THROUGH A GRANT FROM THE U.S. DEPARTMENT OF TRANSPORTATION, FEDERAL TRANSIT ADMINISTRATION (FTA), UNDER THE FEDERAL TRANSIT ACT OF 1964, AS AMENDED, AND IN PART BY THE TAXES OF THE CITIZENS OF LOS ANGELES COUNTY AND OF THE STATE OF CALIFORNIA.

REV	DATE	BY	APP	REG NO	EXPIRES	SEAL HOLDER	DESCRIPTION

DESIGNED BY Z. MACDONELL
DRAWN BY M. ORTIZ
CHECKED BY A. MULL
IN CHARGE A. MULL
DATE 02/21/2025

Metro
LOS ANGELES COUNTY
METROPOLITAN TRANSPORTATION AUTHORITY
HDR
HDR ENGINEERING
350 S. GRAND AVENUE
SUITE 2900
LOS ANGELES, CA 90071
(213) 239-5800

LINK UNION STATION PROJECT

PHASE 2 SUPPLEMENT
TRACK
PLAN AND PROFILE
RT2 STA 130+50 TO STA 140+00

CONTRACT NO PS2415-3172
DRAWING NO TP-404-P2S
REV 0
SCALE HORIZ: 1"=40' VERT: 1"=10'
SHEET NO 13

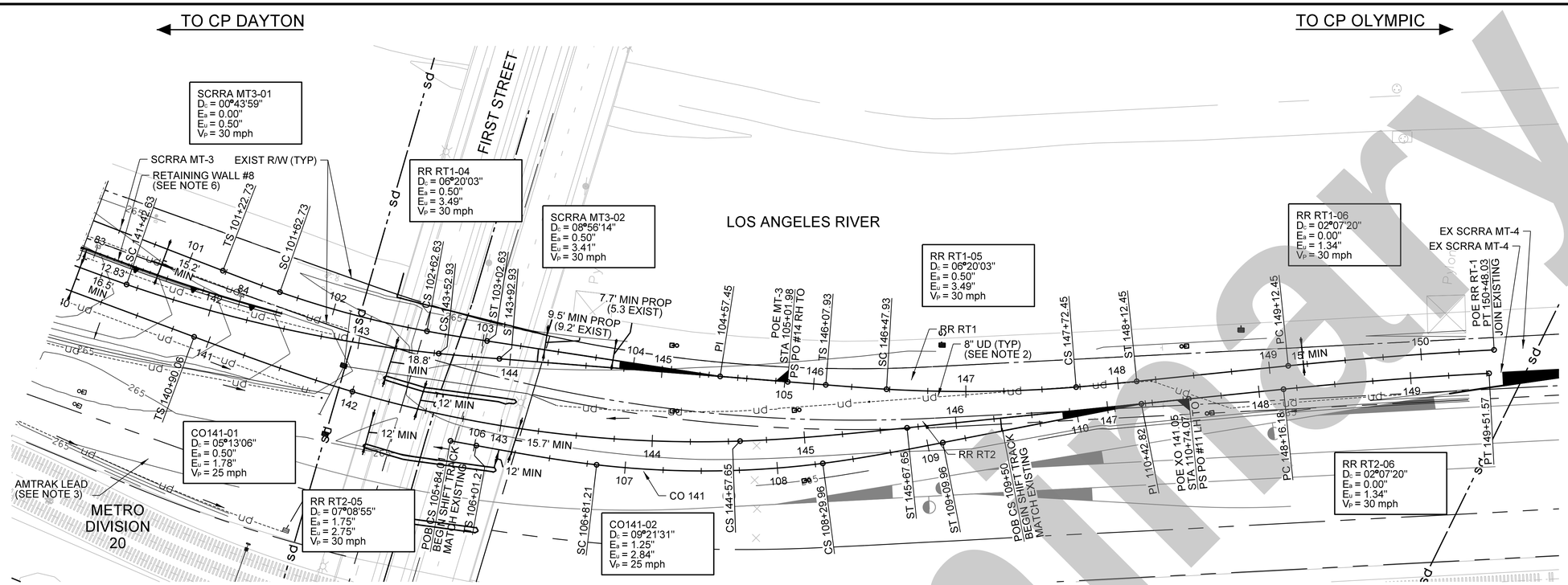

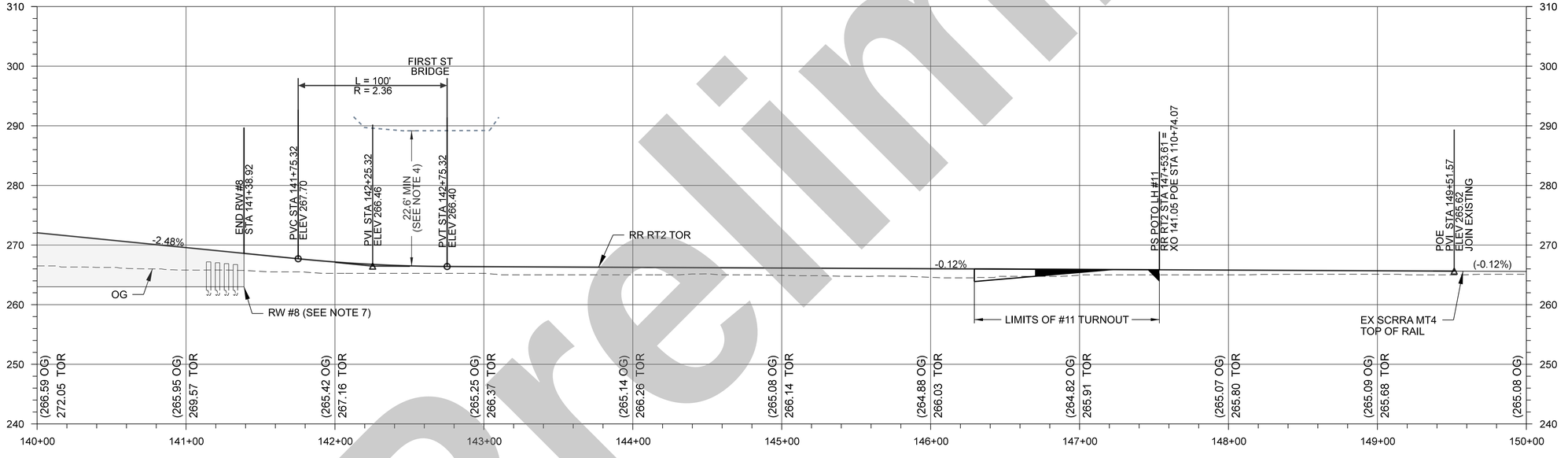

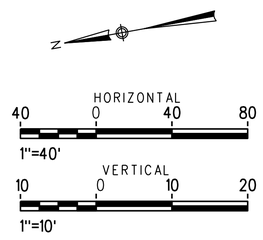

NOTES:

1. SEE UTILITY PLANS FOR EXISTING AND PROPOSED UTILITIES.
2. SEE DRAINAGE PLANS FOR DRAINAGE RELATED WORK.
3. SEE EARLY WORKS PACKAGE 3 AMTRAK LEAD AND WEST SHOOFLY PLANS FOR ADDITIONAL DETAILS AND DIMENSIONS RELATED TO THE REALIGNED AMTRAK LEAD, TEMPORARY WEST SHOOFLY AND WEST BANK GRADING.
4. EXISTING MINIMUM CLEARANCES MAINTAINED BELOW THE FIRST STREET BRIDGE UNLESS NOTED OTHERWISE.
5. SEE EARLY WORKS PACKAGE 3 WEST BANK ACCESS ROAD PLANS FOR ACCESS ROAD RELATED WORK AND CLEARANCES.
6. SEE PHASE 2 SUPPLEMENT TRACK SIGNAL DRAWINGS FOR SIGNAL RELATED WORK IN THIS PHASE.
7. SEE EARLY WORKS PACKAGE 3 RETAINING WALL PLANS FOR WEST BANK RETAINING WALL RELATED WORK.
8. FOR RR RT-1 PROFILE SOUTH OF FIRST STREET SEE TP-406. FOR RR RT1 PROFILE AT LAUS SEE TP-407. RR RT1 PROFILE MATCHES RR RT2 ALONG VIADUCT LIMITS. SEE TP-402TO TP-405 FOR ADDITIONAL INFORMATION RELATED TO TRACK TOR PROFILE.

LEGEND:

- EXISTING TRACK
- EXISTING STORMDRAIN
- EXISTING UNDERDRAIN
- PROPOSED STORMDRAIN
- PROPOSED UNDERDRAIN
- TRACK MODIFICATIONS
- PROPOSED RETAINING WALL

NOT FOR CONSTRUCTION

Preliminary

THE PREPARATION OF THIS DRAWING HAS BEEN FINANCED IN PART THROUGH A GRANT FROM THE U.S. DEPARTMENT OF TRANSPORTATION, FEDERAL TRANSIT ADMINISTRATION (FTA), UNDER THE FEDERAL TRANSIT ACT OF 1964, AS AMENDED, AND IN PART BY THE TAXES OF THE CITIZENS OF LOS ANGELES COUNTY AND OF THE STATE OF CALIFORNIA.

REV	DATE	BY	APP	REG NO	EXPIRES	SEAL HOLDER	DESCRIPTION

DESIGNED BY	Z. MACDONELL
DRAWN BY	M. ORTIZ
CHECKED BY	A. MULL
IN CHARGE	A. MULL
DATE	02/21/2025

Metro
LOS ANGELES COUNTY
METROPOLITAN TRANSPORTATION AUTHORITY
HDR
HDR ENGINEERING
350 S. GRAND AVENUE
SUITE 2900
LOS ANGELES, CA 90071
(213) 239-5800

LINK UNION STATION PROJECT

PHASE 2 SUPPLEMENT
TRACK
PLAN AND PROFILE
RT2 STA 140+00 TO STA 149+65

CONTRACT NO	PS2415-3172
DRAWING NO	TP-405-P2S
REV	0
SCALE	HORIZ: 1"=40' VERT: 1"=10'
SHEET NO	14

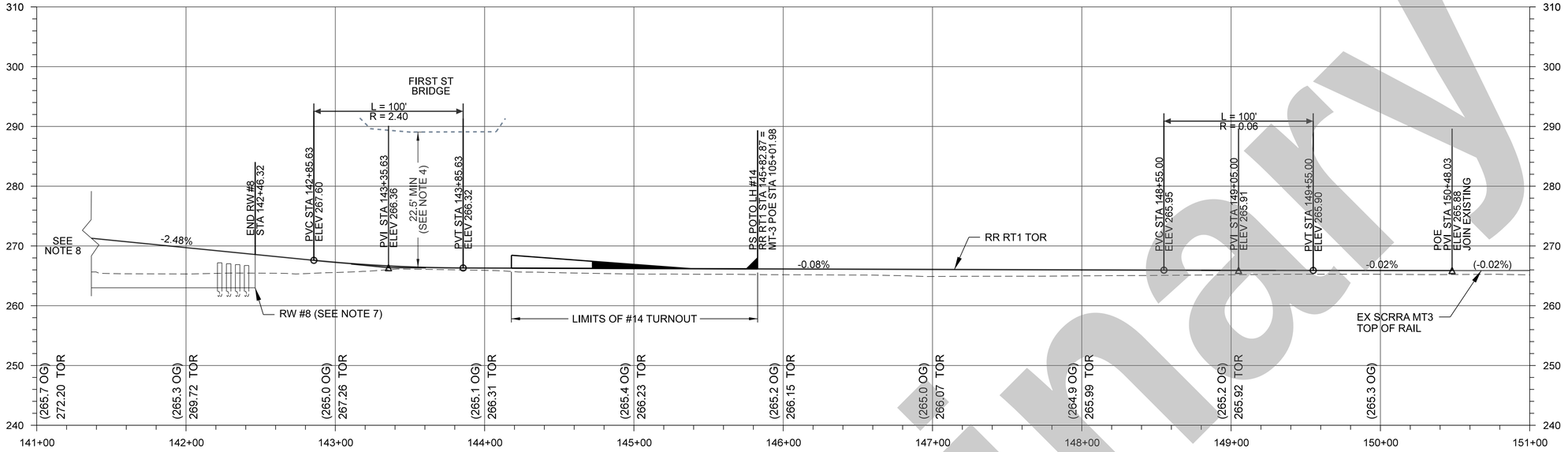

RR RT1 TP MT3 CONNECTION PROFILE

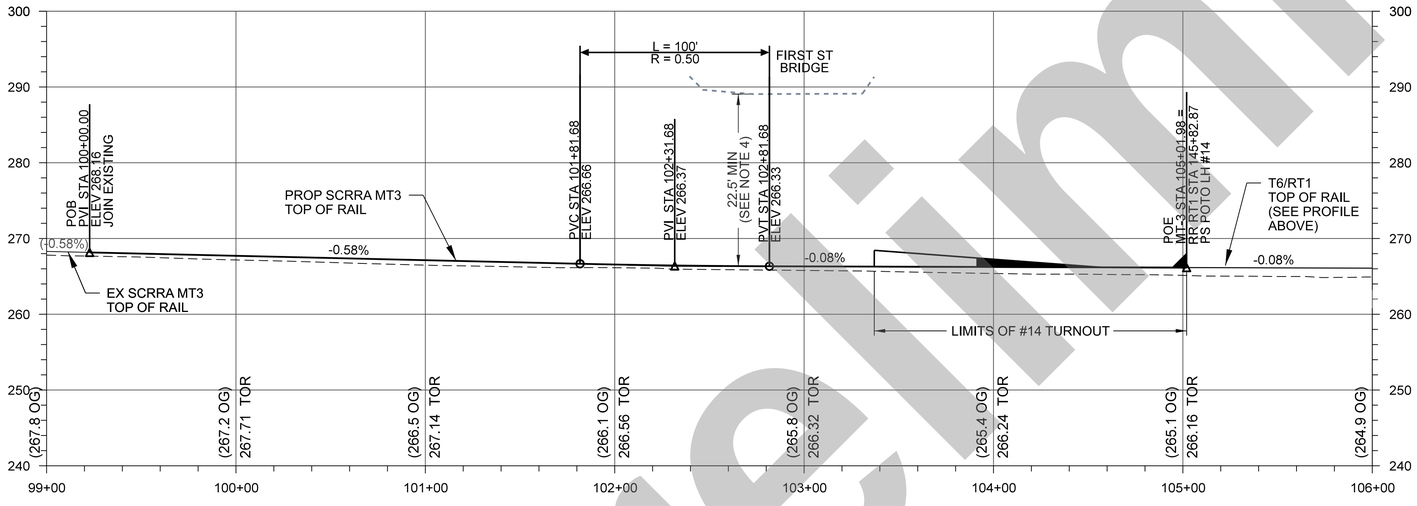

MT3 TO RR RT1 CONNECTION PROFILE

NOTES:

1. SEE UTILITY PLANS FOR EXISTING AND PROPOSED UTILITIES.
2. SEE DRAINAGE PLANS FOR DRAINAGE RELATED WORK.
3. SEE EARLY WORKS PACKAGE 3 AMTRAK LEAD AND WEST SHOOFLY PLANS FOR ADDITIONAL DETAILS AND DIMENSIONS RELATED TO THE REALIGNED AMTRAK LEAD, TEMPORARY WEST SHOOFLY AND WEST BANK GRADING.
4. EXISTING MINIMUM CLEARANCES MAINTAINED BELOW THE FIRST STREET BRIDGE UNLESS NOTED OTHERWISE.
5. SEE EARLY WORKS PACKAGE 3 WEST BANK ACCESS ROAD PLANS FOR ACCESS ROAD RELATED WORK AND CLEARANCES.
6. SEE PHASE 2 SUPPLEMENT ELEMENT TRACK SIGNAL DRAWINGS FOR SIGNAL RELATED WORK IN THIS PHASE.
7. SEE EARLY WORKS PACKAGE 3 RETAINING WALL PLANS FOR WEST BANK RETAINING WALL RELATED WORK.
8. FOR RR RT1 PROFILE AT LAUS SEE TP-407. RR RT1 PROFILE MATCHES RR RT2 ALONG VIADUCT LIMITS. SEE TP-402 TO TP-405 FOR ADDITIONAL INFORMATION RELATED TO TRACK TOR PROFILE.

HORIZONTAL
40 0 40 80
1"=40'

VERTICAL
10 0 10 20
1"=10'

NOT FOR CONSTRUCTION

Preliminary

THE PREPARATION OF THIS DRAWING HAS BEEN FINANCED IN PART THROUGH A GRANT FROM THE U.S. DEPARTMENT OF TRANSPORTATION, FEDERAL TRANSIT ADMINISTRATION (FTA), UNDER THE FEDERAL TRANSIT ACT OF 1964, AS AMENDED, AND IN PART BY THE TAXES OF THE CITIZENS OF LOS ANGELES COUNTY AND OF THE STATE OF CALIFORNIA.

REV	DATE	BY	APP	REG NO	EXPIRES	SEAL HOLDER	DESCRIPTION

DESIGNED BY Z. MACDONELL
DRAWN BY M. ORTIZ
CHECKED BY A. MULL
IN CHARGE A. MULL
DATE 02/21/2025

Metro
LOS ANGELES COUNTY METROPOLITAN TRANSPORTATION AUTHORITY
HDR
HDR ENGINEERING
350 S. GRAND AVENUE SUITE 2900 LOS ANGELES, CA 90071 (213) 239-5800

LINK UNION STATION PROJECT
PHASE 2 SUPPLEMENT
TRACK
PLAN AND PROFILE
RT2 STA 149+65 TO RR2 STA XX+XX

CONTRACT NO PS2415-3172
DRAWING NO TP-406-P2S
REV 0
SCALE HORIZ: 1"=40' VERT: 1"=10'
SHEET NO 15

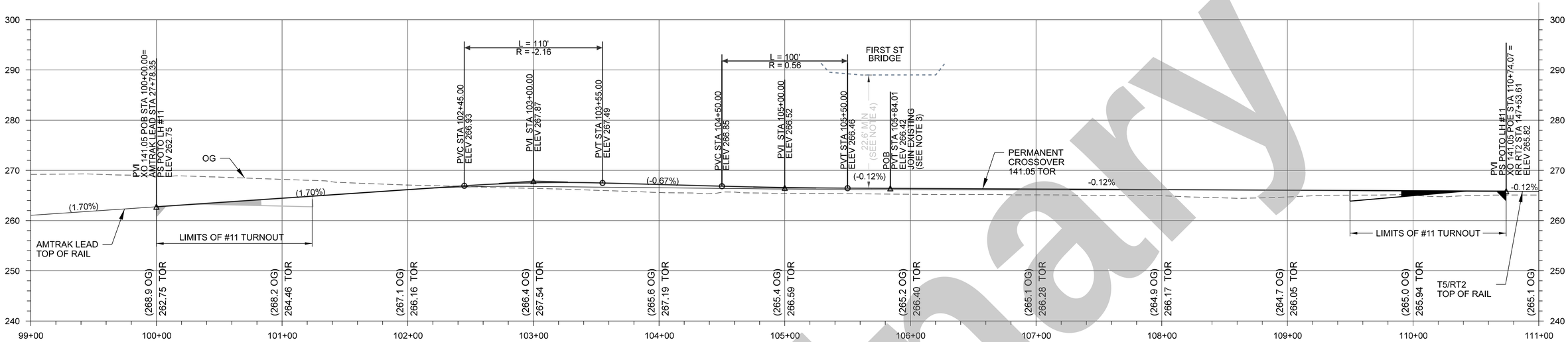

CROSSOVER 141.05 TOR PROFILE

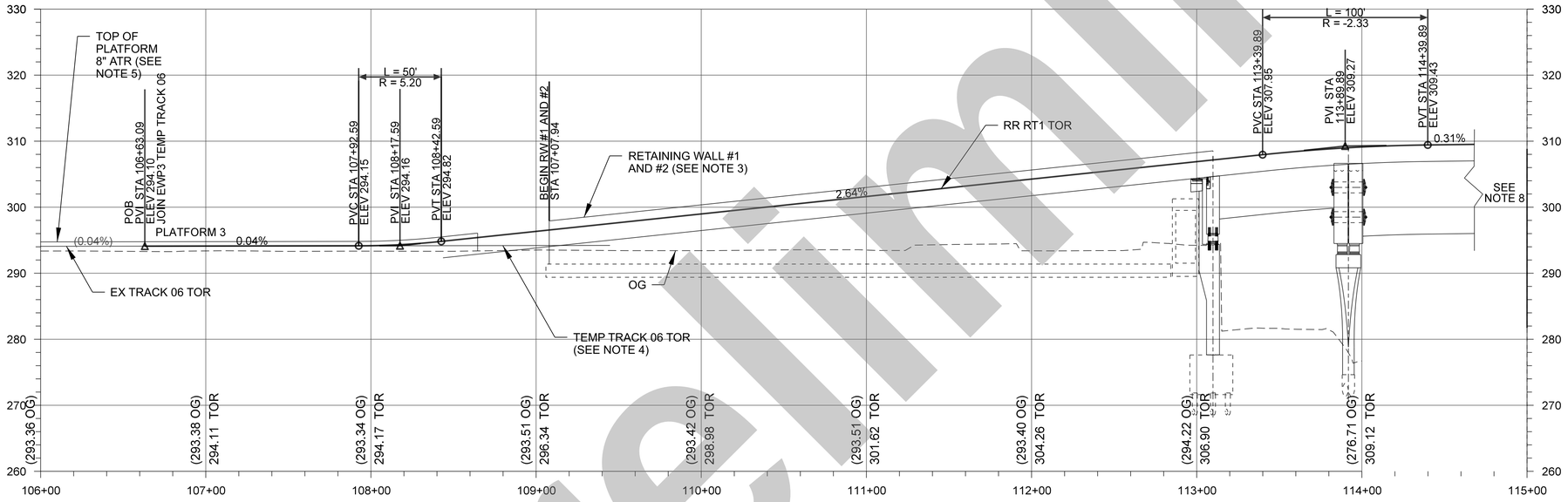

T06 TO RR RT1 CONNECTION PROFILE

NOTES:

1. SEE UTILITY PLANS FOR EXISTING AND PROPOSED UTILITIES.
2. SEE DRAINAGE PLANS FOR DRAINAGE RELATED WORK.
3. SEE EARLY WORKS PACKAGE 3 AMTRAK LEAD AND WEST SHOOFLY PLANS FOR ADDITIONAL DETAILS AND DIMENSIONS RELATED TO THE REALIGNED AMTRAK LEAD, TEMPORARY WEST SHOOFLY AND WEST BANK GRADING.
4. EXISTING MINIMUM CLEARANCES MAINTAINED BELOW THE FIRST STREET BRIDGE UNLESS NOTED OTHERWISE.
5. SEE EARLY WORKS PACKAGE 3 WEST BANK ACCESS ROAD PLANS FOR ACCESS ROAD RELATED WORK AND CLEARANCES.
6. SEE PHASE 2 SUPPLEMENT ELEMENT TRACK SIGNAL DRAWINGS FOR SIGNAL RELATED WORK IN THIS PHASE.
7. SEE EARLY WORKS PACKAGE 3 RETAINING WALL PLANS FOR WEST BANK RETAINING WALL RELATED WORK.
8. FOR RR RT1 PROFILE SOUTH OF FIRST STREET SEE TP-406. RR RT1 PROFILE MATCHES RR RT2 ALONG VIADUCT LIMITS, SEE TP-402 TO TP-405 FOR ADDITIONAL INFORMATION RELATED TO TRACK TOR PROFILE.

HORIZONTAL
40 0 40 80
1"=40'

VERTICAL
10 0 10 20
1"=10'

NOT FOR CONSTRUCTION

Preliminary

THE PREPARATION OF THIS DRAWING HAS BEEN FINANCED IN PART THROUGH A GRANT FROM THE U.S. DEPARTMENT OF TRANSPORTATION, FEDERAL TRANSIT ADMINISTRATION (FTA), UNDER THE FEDERAL TRANSIT ACT OF 1964, AS AMENDED, AND IN PART BY THE TAXES OF THE CITIZENS OF LOS ANGELES COUNTY AND OF THE STATE OF CALIFORNIA.

REV	DATE	BY	APP	REG NO	EXPIRES	SEAL HOLDER	DESCRIPTION

DESIGNED BY Z. MACDONELL
DRAWN BY M. ORTIZ
CHECKED BY A. MULL
IN CHARGE A. MULL
DATE 02/21/2025

Metro
LOS ANGELES COUNTY
METROPOLITAN TRANSPORTATION AUTHORITY

HDR
HDR ENGINEERING
350 S. GRAND AVENUE
SUITE 2900
LOS ANGELES, CA 90071
(213) 239-5800

LINK UNION STATION PROJECT

PHASE 2 SUPPLEMENT
TRACK PROFILE
CROSSOVER 141.05 PERMAMENT
STA 99+00 TO STA 111+00

CONTRACT NO PS2415-3172
DRAWING NO TP-407-P2S
REV 0
SCALE HORIZ: 1"=40'
VERT: 1"=10'
SHEET NO 16

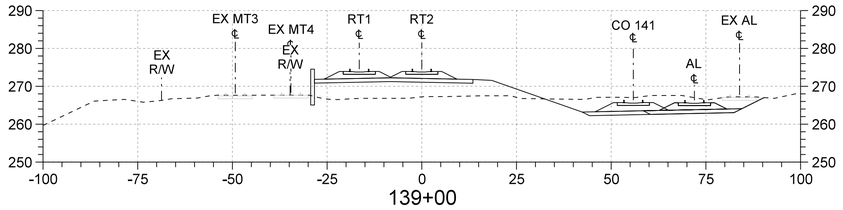

139+00

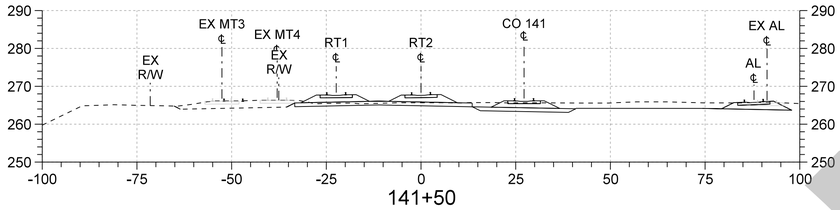

141+50

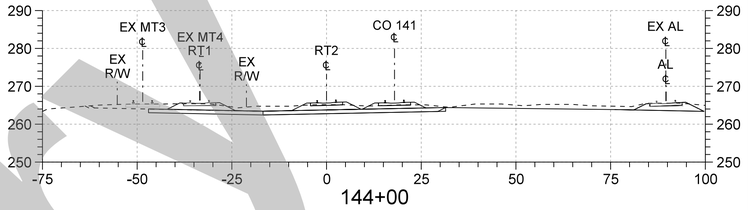

144+00

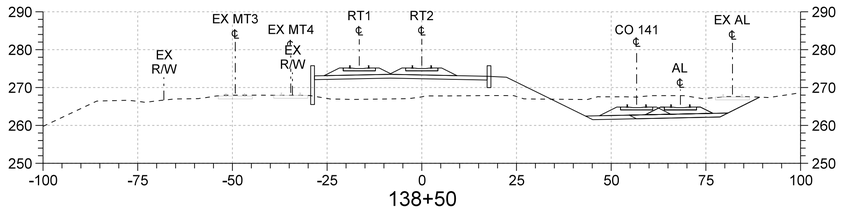

138+50

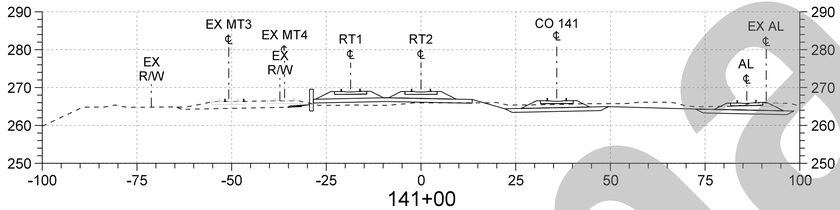

141+00

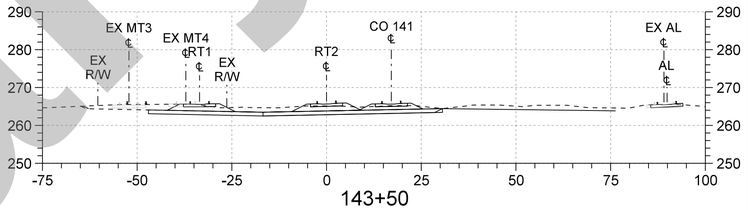

143+50

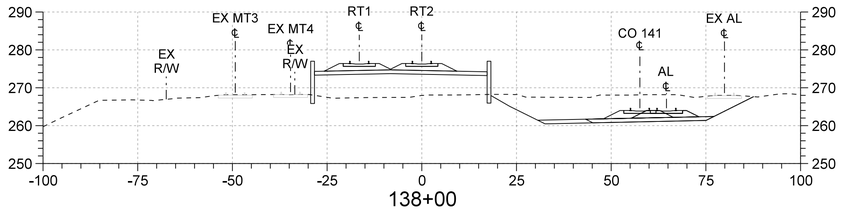

138+00

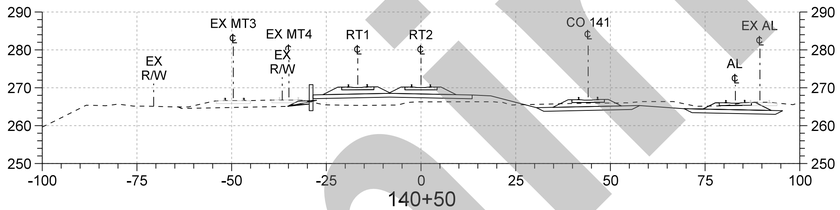

140+50

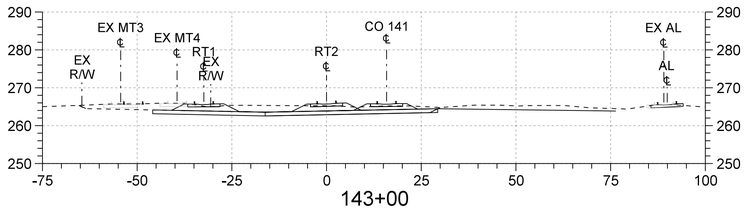

143+00

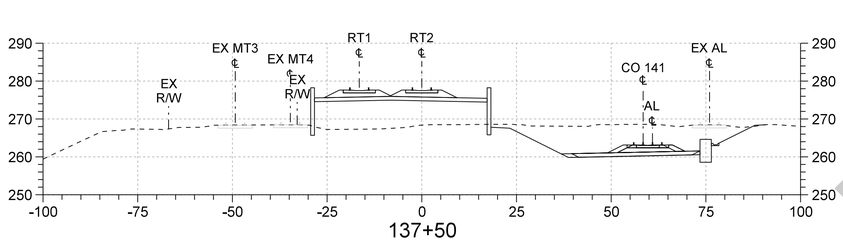

137+50

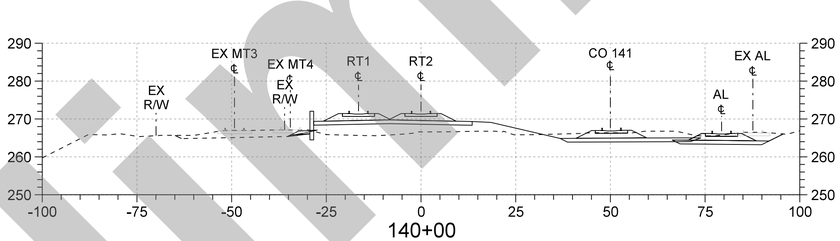

140+00

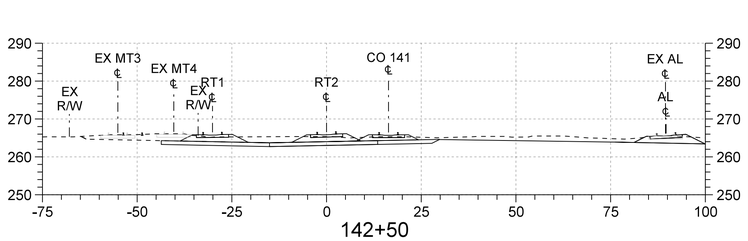

142+50

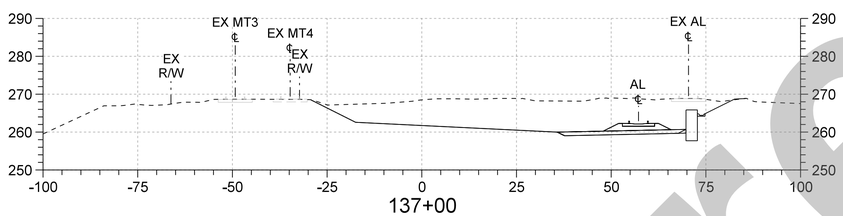

137+00

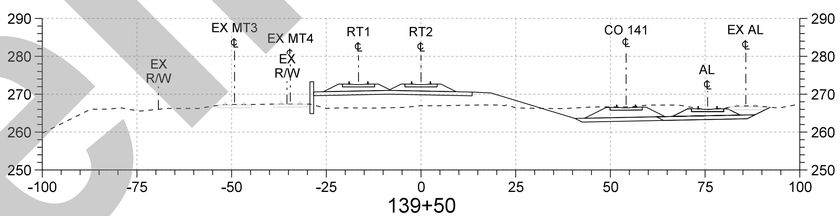

139+50

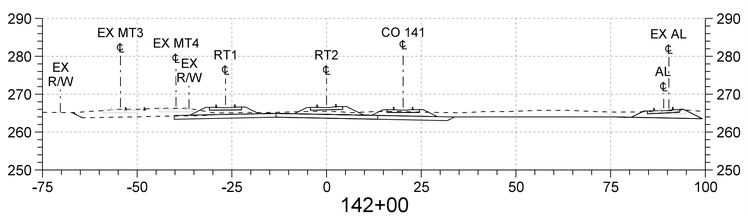

142+00

Preliminary

NOT FOR CONSTRUCTION

THE PREPARATION OF THIS DRAWING HAS BEEN FINANCED IN PART THROUGH A GRANT FROM THE U.S. DEPARTMENT OF TRANSPORTATION, FEDERAL TRANSIT ADMINISTRATION (FTA), UNDER THE FEDERAL TRANSIT ACT OF 1964, AS AMENDED, AND IN PART BY THE TAXES OF THE CITIZENS OF LOS ANGELES COUNTY AND OF THE STATE OF CALIFORNIA.

REV	DATE	BY	APP	REG NO	EXPIRES	SEAL HOLDER	DESCRIPTION

DESIGNED BY Z. MACDONELL
DRAWN BY M. ORTIZ
CHECKED BY A. MULL
IN CHARGE A. MULL
DATE 02/21/2025

Metro
LOS ANGELES COUNTY
METROPOLITAN TRANSPORTATION AUTHORITY

HDR
HDR ENGINEERING
350 S. GRAND AVENUE
SUITE 2900
LOS ANGELES, CA 90071
(213) 239-5800

LINK UNION STATION PROJECT

PHASE 2 SUPPLEMENT
TRACK
CROSS SECTIONS
RT2 STA 137+00 TO STA 144+00

CONTRACT NO PS2415-3172
DRAWING NO TC-401-P2S
REV 0
SCALE HORIZ: 1"=20'
VERT: 1"=4'
SHEET NO 17

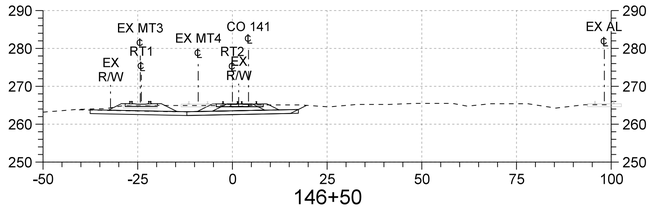

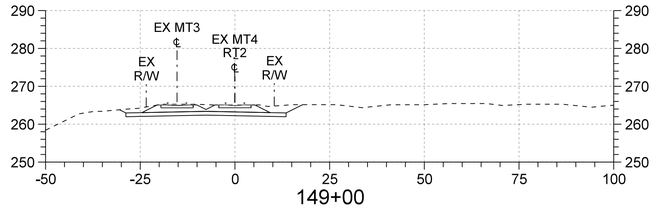

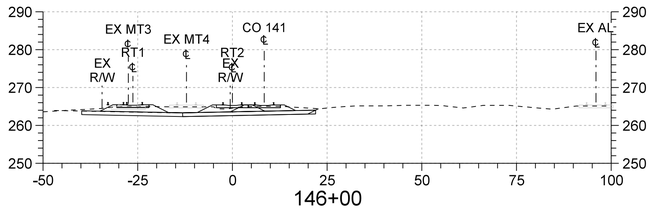

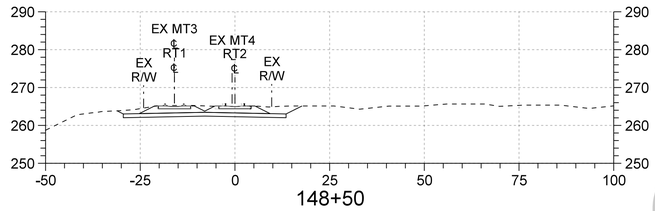

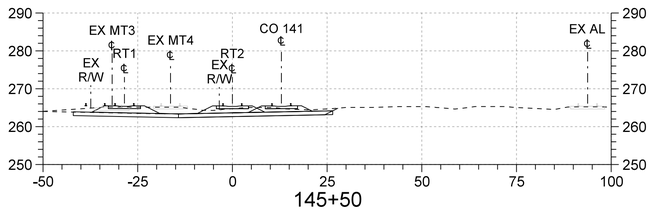

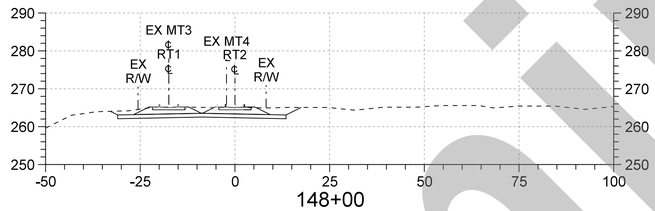

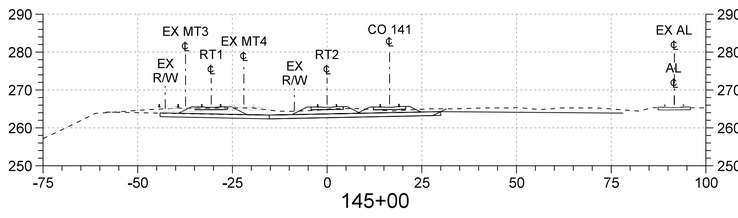

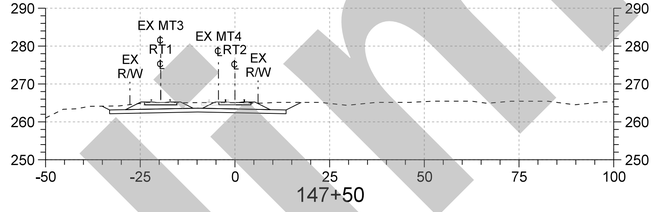

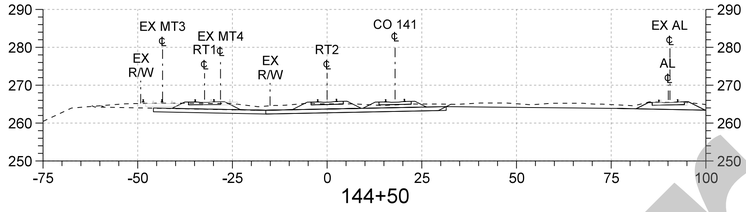

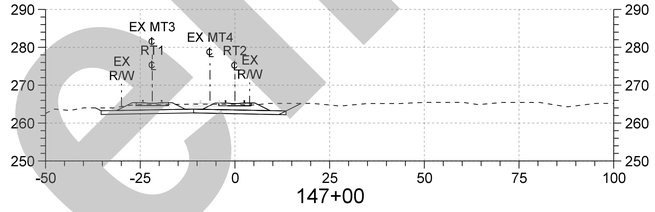

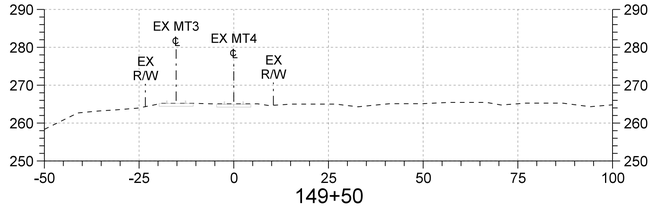

Preliminary

NOT FOR CONSTRUCTION

THE PREPARATION OF THIS DRAWING HAS BEEN FINANCED IN PART THROUGH A GRANT FROM THE U.S. DEPARTMENT OF TRANSPORTATION, FEDERAL TRANSIT ADMINISTRATION (FTA), UNDER THE FEDERAL TRANSIT ACT OF 1964, AS AMENDED, AND IN PART BY THE TAXES OF THE CITIZENS OF LOS ANGELES COUNTY AND OF THE STATE OF CALIFORNIA.

REV	DATE	BY	APP	REG NO	EXPIRES	SEAL HOLDER	DESCRIPTION

DESIGNED BY Z. MACDONELL
DRAWN BY M. ORTIZ
CHECKED BY A. MULL
IN CHARGE A. MULL
DATE 02/21/2025

Metro
LOS ANGELES COUNTY
METROPOLITAN TRANSPORTATION AUTHORITY

HDR ENGINEERING
350 S. GRAND AVENUE
SUITE 2900
LOS ANGELES, CA 90071
(213) 239-5800

LINK UNION STATION PROJECT

PHASE 2 SUPPLEMENT
TRACK
CROSS SECTIONS
RT2 STA 144+50 TO STA 149+50

CONTRACT NO PS2415-3172
DRAWING NO TC-402-P2S
REV 0
SCALE HORIZ: 1"=20'
VERT: 1"=4'
SHEET NO 18

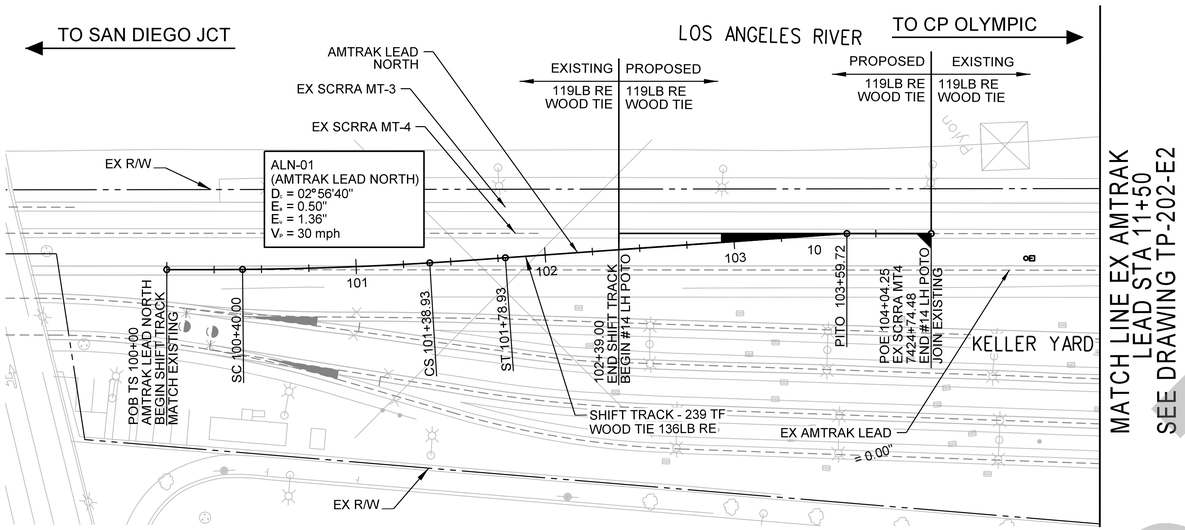

PLAN

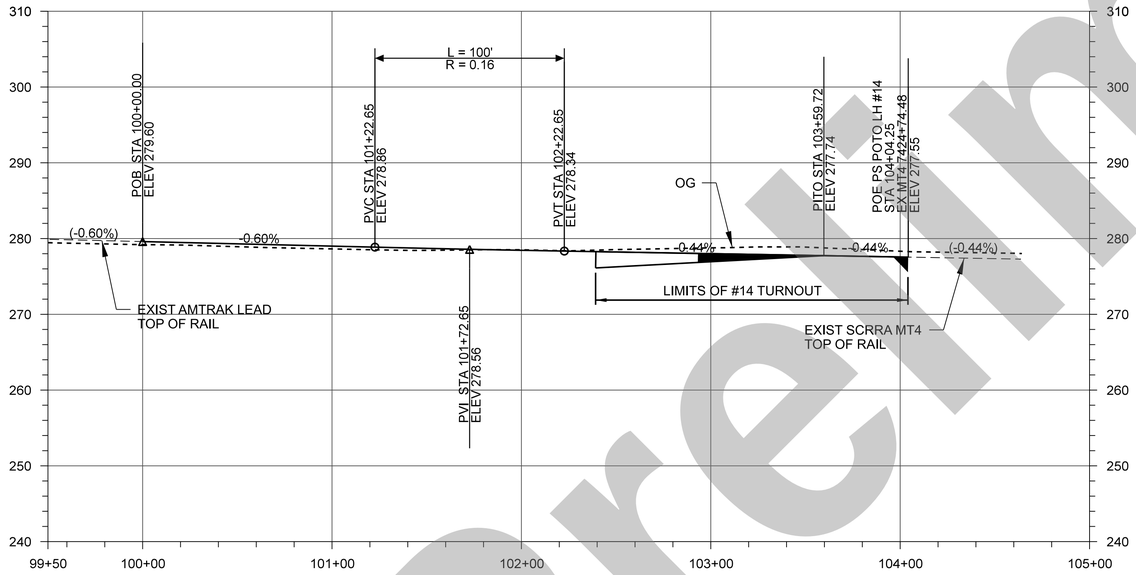

PROFILE

NOTES:

1. PROTECT EXISTING TRACKS IN PLACE AT ALL TIMES UNLESS NOTED OTHERWISE.
2. SEE UTILITY PLANS FOR EXISTING AND PROPOSED UTILITIES.
3. SEE GRADING AND DRAINAGE PLANS FOR DRAINAGE RELATED WORK.
4. SEE EARLY WORKS PACKAGE 3 TRACK SIGNAL DRAWINGS FOR SIGNAL RELATED WORK IN THIS PHASE.
5. SEE EARLY WORKS PACKAGE 3 RETAINING WALL AND DUCOMMUN PROTECTION SLAB PLANS FOR STRUCTURAL RELATED WORK.

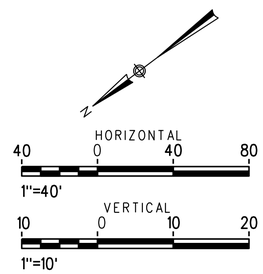

NOT FOR CONSTRUCTION

Preliminary

THE PREPARATION OF THIS DRAWING HAS BEEN FINANCED IN PART THROUGH A GRANT FROM THE U.S. DEPARTMENT OF TRANSPORTATION, FEDERAL TRANSIT ADMINISTRATION (FTA), UNDER THE FEDERAL TRANSIT ACT OF 1964, AS AMENDED, AND IN PART BY THE TAXES OF THE CITIZENS OF LOS ANGELES COUNTY AND OF THE STATE OF CALIFORNIA.

REV	DATE	BY	APP	REG NO	EXPIRES	SEAL HOLDER	DESCRIPTION

DESIGNED BY Z. MACDONELL
DRAWN BY M. ORTIZ
CHECKED BY A. MULL
IN CHARGE A. MULL
DATE XX/XX/2024

Metro
LOS ANGELES COUNTY
METROPOLITAN TRANSPORTATION AUTHORITY

HDR
HDR ENGINEERING
350 S. GRAND AVENUE
SUITE 2900
LOS ANGELES, CA 90071
(213) 239-5800

LINK UNION STATION PROJECT

TRACK DRAWINGS - EAST AREA 2
TRACK PLAN AND PROFILE
SHEET 1 OF 5

CONTRACT NO PS2415-3172
DRAWING NO TP-301-E2
REV 0
SCALE HORIZ: 1"=40'
VERT: 1"=10'
SHEET NO 19

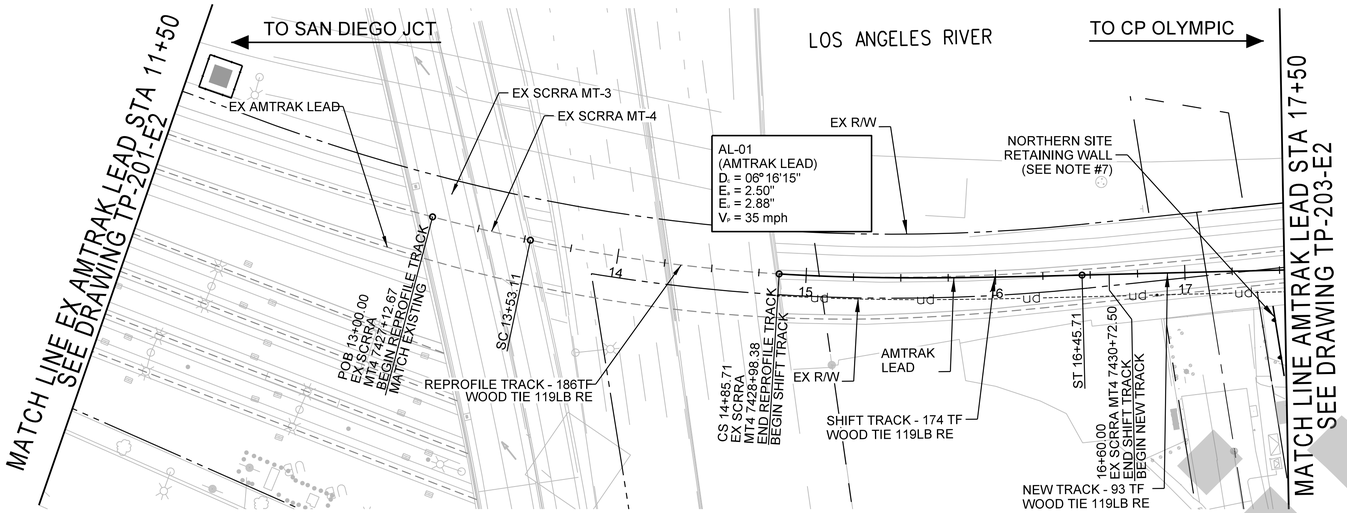

PLAN

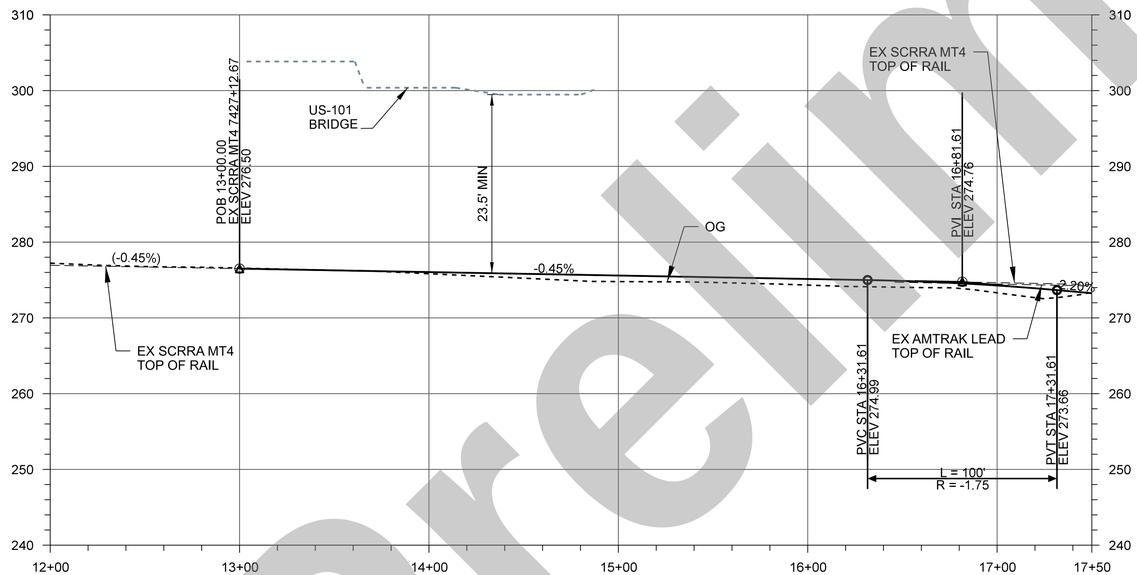

PROFILE

NOTES:

1. PROTECT EXISTING TRACKS IN PLACE AT ALL TIMES UNLESS NOTED OTHERWISE.
2. VERTICAL CLEARANCES TO BOTTOM OF US-101 BRIDGE AND HORIZONTAL CLEARANCES TO THE BRIDGE PIER WALLS MATCH EXISTING MINIMUM CLEARANCES UNLESS NOTED OTHERWISE.
3. SEE UTILITY PLANS FOR EXISTING AND PROPOSED UTILITIES.
4. SEE GRADING AND DRAINAGE PLANS FOR DRAINAGE RELATED WORK.
5. SEE EARLY WORKS PACKAGE 3 WEST BANK ACCESS ROAD PLANS FOR ACCESS ROAD RELATED WORK AND CLEARANCES.
6. SEE PHASE 2 SUPPLEMENT COMMERCIAL/CENTER STREET MODIFICATION PLANS FOR ROADWAY RELATED WORK
7. SEE EARLY WORKS PACKAGE 3 TRACK SIGNAL DRAWINGS FOR SIGNAL RELATED WORK IN THIS PHASE.
8. SEE EARLY WORKS PACKAGE 3 RETAINING WALL AND DUCOMMUN PROTECTION SLAB PLANS FOR STRUCTURAL RELATED WORK.

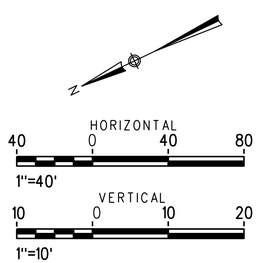

NOT FOR CONSTRUCTION

Preliminary

THE PREPARATION OF THIS DRAWING HAS BEEN FINANCED IN PART THROUGH A GRANT FROM THE U.S. DEPARTMENT OF TRANSPORTATION, FEDERAL TRANSIT ADMINISTRATION (FTA), UNDER THE FEDERAL TRANSIT ACT OF 1964, AS AMENDED, AND IN PART BY THE TAXES OF THE CITIZENS OF LOS ANGELES COUNTY AND OF THE STATE OF CALIFORNIA.

REV	DATE	BY	APP	REG NO	EXPIRES	SEAL HOLDER	DESCRIPTION

DESIGNED BY: Z. MACDONELL
DRAWN BY: M. ORTIZ
CHECKED BY: A. MULL
IN CHARGE: A. MULL
DATE: XX/XX/2024

Metro
LOS ANGELES COUNTY
METROPOLITAN TRANSPORTATION AUTHORITY

HDR ENGINEERING
350 S. GRAND AVENUE
SUITE 2900
LOS ANGELES, CA 90071
(213) 239-5800

LINK UNION STATION PROJECT

TRACK DRAWINGS - EAST AREA 2
TRACK PLAN AND PROFILE
SHEET 2 OF 5

CONTRACT NO: PS2415-3172
DRAWING NO: TP-302-E2
REV: 0
SCALE: HORIZ: 1"=40'
VERT: 1"=10'
SHEET NO: 20

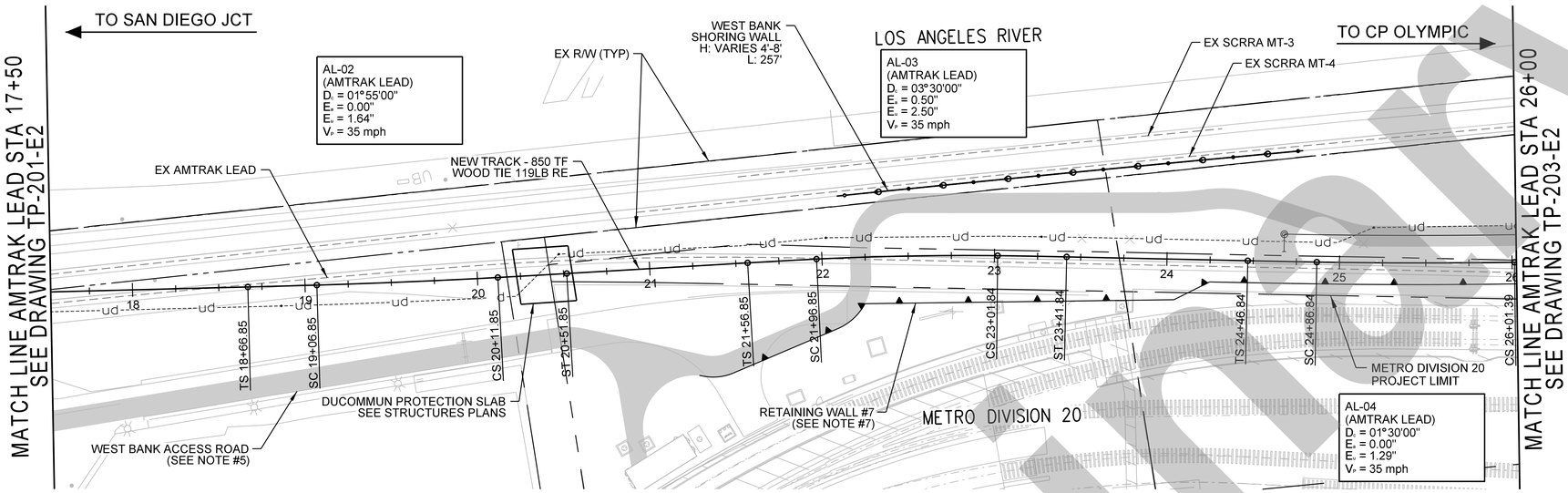

PLAN

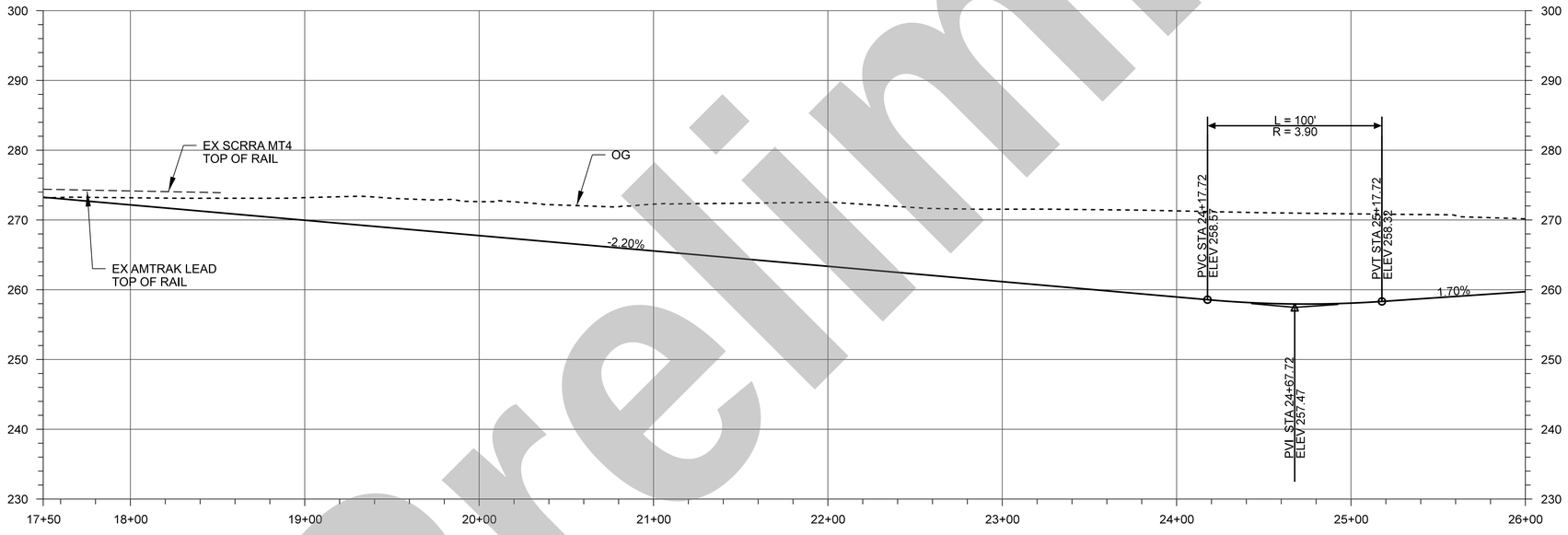

PROFILE

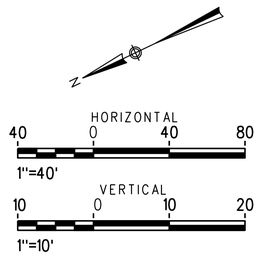

NOTES:

1. PROTECT EXISTING TRACKS IN PLACE AT ALL TIMES UNLESS NOTED OTHERWISE.
2. SEE UTILITY PLANS FOR EXISTING AND PROPOSED UTILITIES.
3. SEE GRADING AND DRAINAGE PLANS FOR DRAINAGE RELATED WORK.
4. SEE PHASE 2 SUPPLEMENT VIADUCT STRUCTURAL PLANS FOR DETAILS RELATED TO THE RUN-THROUGH VIADUCT.
5. SEE EARLY WORKS PACKAGE 3 WEST BANK ACCESS ROAD PLANS FOR ACCESS ROAD RELATED WORK AND CLEARANCES.
6. SEE EARLY WORKS PACKAGE 3 TRACK SIGNAL DRAWINGS FOR SIGNAL RELATED WORK IN THIS PHASE.
7. SEE EARLY WORKS PACKAGE 3 RETAINING WALL AND DUCOMMUN PROTECTION SLAB PLANS FOR STRUCTURAL RELATED WORK.

Preliminary

NOT FOR CONSTRUCTION

THE PREPARATION OF THIS DRAWING HAS BEEN FINANCED IN PART THROUGH A GRANT FROM THE U.S. DEPARTMENT OF TRANSPORTATION, FEDERAL TRANSIT ADMINISTRATION (FTA), UNDER THE FEDERAL TRANSIT ACT OF 1964, AS AMENDED, AND IN PART BY THE TAXES OF THE CITIZENS OF LOS ANGELES COUNTY AND OF THE STATE OF CALIFORNIA.

REV	DATE	BY	APP	REG NO	EXPIRES	SEAL HOLDER	DESCRIPTION

DESIGNED BY: Z. MACDONELL
DRAWN BY: M. ORTIZ
CHECKED BY: A. MULL
IN CHARGE: A. MULL
DATE: XX/XX/2024

Metro
LOS ANGELES COUNTY
METROPOLITAN TRANSPORTATION AUTHORITY

HDR
HDR ENGINEERING
350 S. GRAND AVENUE
SUITE 2900
LOS ANGELES, CA 90071
(213) 239-5800

LINK UNION STATION PROJECT

TRACK DRAWINGS - EAST AREA 2
TRACK PLAN AND PROFILE
SHEET 3 OF 5

CONTRACT NO: PS2415-3172
DRAWING NO: TP-303-E2
REV: 0
SCALE: HORIZ: 1"=40'
VERT: 1"=10'
SHEET NO: 21

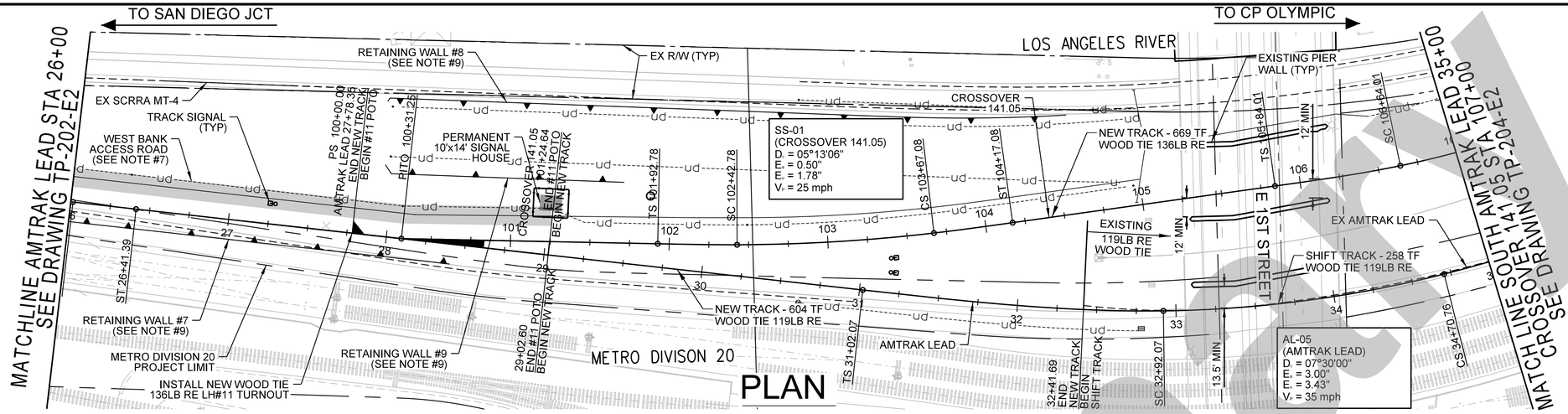

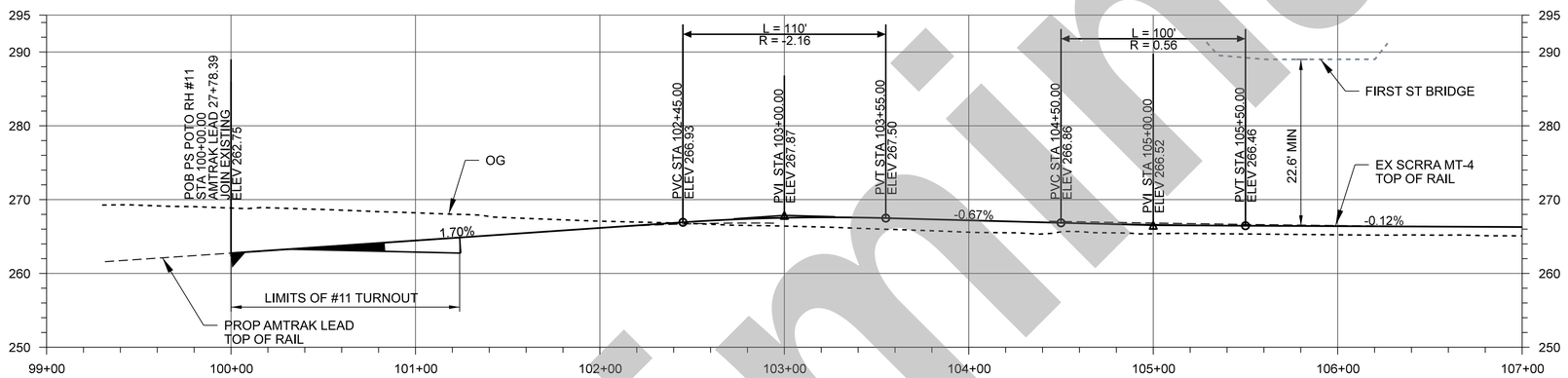

CROSSOVER 141.05 PROFILE

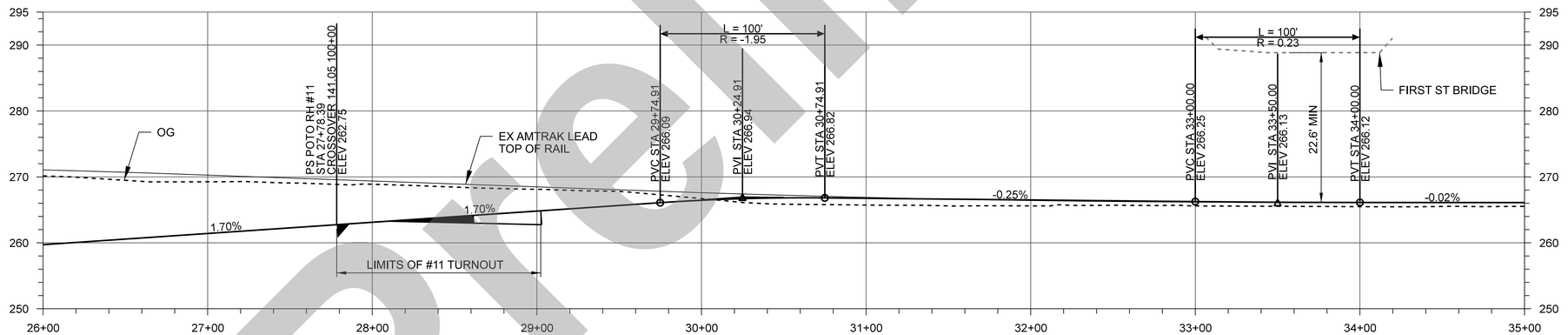

AMTRAK LEAD PROFILE

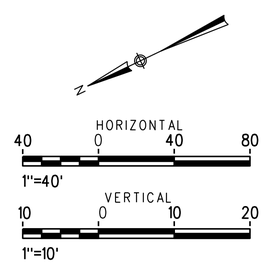

NOTES:

1. PROTECT EXISTING TRACKS IN PLACE AT ALL TIMES UNLESS NOTED OTHERWISE.
2. VERTICAL CLEARANCES TO BOTTOM OF FIRST STREET BRIDGE AND HORIZONTAL CLEARANCES TO THE BRIDGE PIER WALLS MATCH EXISTING MINIMUM CLEARANCES UNLESS NOTED OTHERWISE.
3. SEE EARLY WORKS PACKAGE 1 EAST SHOOFLY/ TEMPORARY AMTRAK LEAD TRACK PLANS FOR WORK RELATED TO THE EAST SHOOFLY.
4. SEE UTILITY PLANS FOR EXISTING AND PROPOSED UTILITIES.
5. SEE GRADING AND DRAINAGE PLANS FOR DRAINAGE RELATED WORK.
6. SEE PHASE 2 SUPPLEMENT VIADUCT STRUCTURAL PLANS FOR DETAILS RELATED TO THE RUN-THROUGH VIADUCT.
7. SEE EARLY WORKS PACKAGE 3 WEST BANK ACCESS ROAD PLANS FOR ACCESS ROAD RELATED WORK AND CLEARANCES.
8. SEE EARLY WORKS PACKAGE 3 TRACK SIGNAL DRAWINGS FOR SIGNAL RELATED WORK IN THIS PHASE.
9. SEE EARLY WORKS PACKAGE 3 RETAINING WALL AND DUCOMMUN PROTECTION SLAB PLANS FOR STRUCTURAL RELATED WORK.

NOT FOR CONSTRUCTION

Preliminary

THE PREPARATION OF THIS DRAWING HAS BEEN FINANCED IN PART THROUGH A GRANT FROM THE U.S. DEPARTMENT OF TRANSPORTATION, FEDERAL TRANSIT ADMINISTRATION (FTA), UNDER THE FEDERAL TRANSIT ACT OF 1964, AS AMENDED, AND IN PART BY THE TAXES OF THE CITIZENS OF LOS ANGELES COUNTY AND OF THE STATE OF CALIFORNIA.

REV	DATE	BY	APP	REG NO	EXPIRES	SEAL HOLDER	DESCRIPTION

DESIGNED BY Z. MACDONELL
DRAWN BY M. ORTIZ
CHECKED BY A. MULL
IN CHARGE A. MULL
DATE XX/XX/2024

Metro
LOS ANGELES COUNTY METROPOLITAN TRANSPORTATION AUTHORITY
HDR
HDR ENGINEERING
350 S. GRAND AVENUE SUITE 2900 LOS ANGELES, CA 90071 (213) 239-5800

LINK UNION STATION PROJECT

TRACK DRAWINGS - EAST AREA 2
TRACK PLAN AND PROFILE
SHEET 4 OF 5

CONTRACT NO PS2415-3172
DRAWING NO TP-304-E2
REV 0
SCALE HORIZ: 1"=40' VERT: 1"=10'
SHEET NO 22

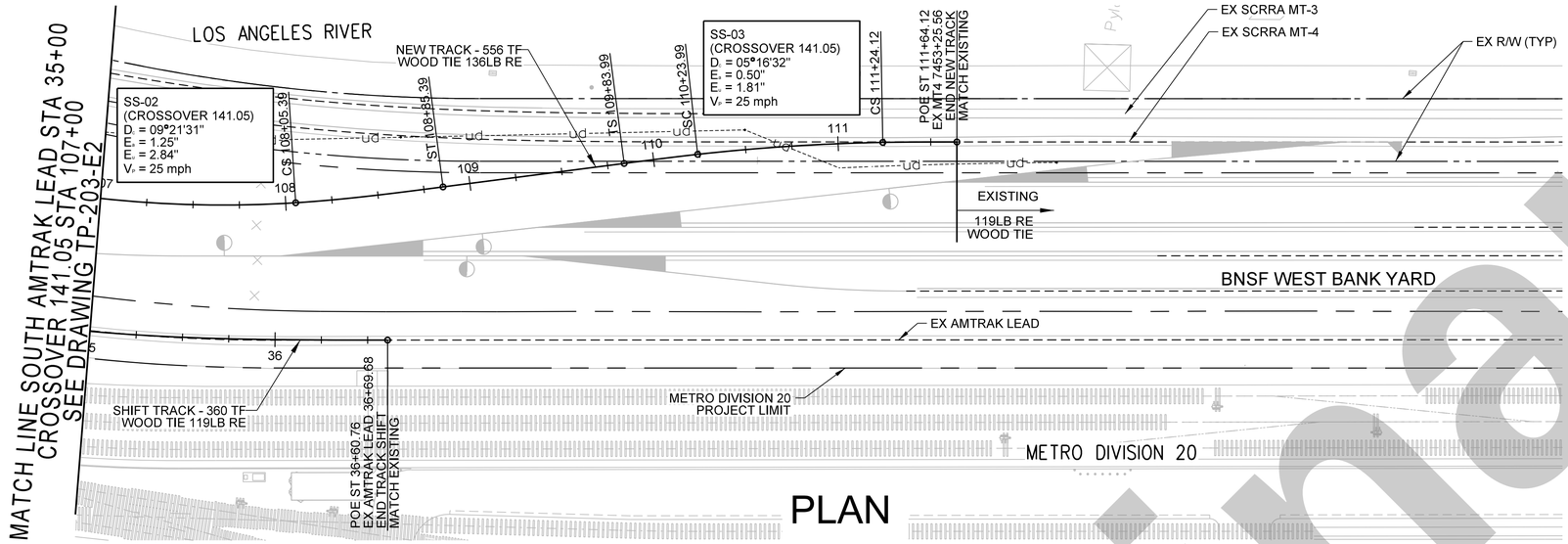

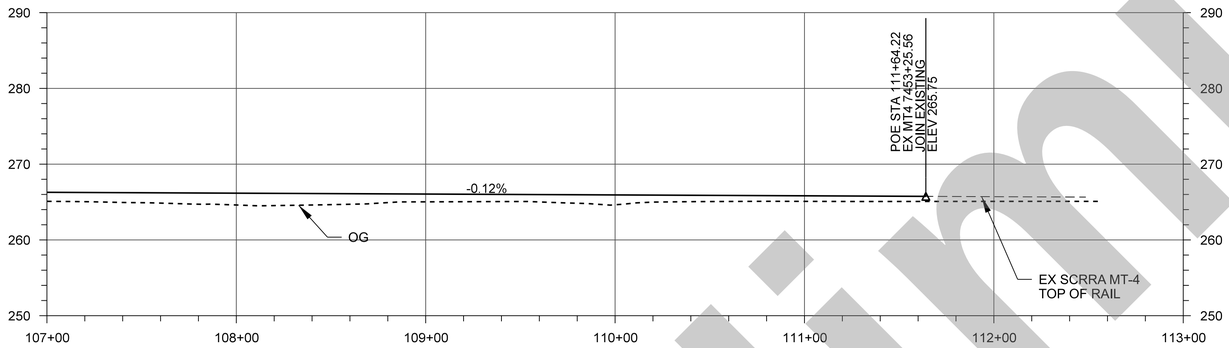

CROSSOVER 141.05 PROFILE

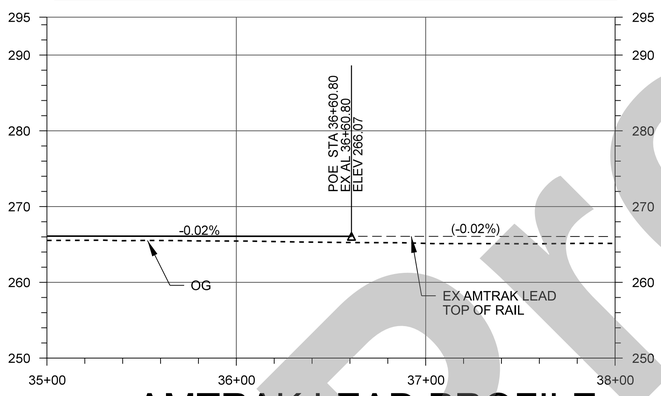

AMTRAK LEAD PROFILE

NOTES:

1. PROTECT EXISTING TRACKS IN PLACE AT ALL TIMES UNLESS NOTED OTHERWISE.
2. SEE UTILITY PLANS FOR EXISTING AND PROPOSED UTILITIES.
3. SEE GRADING AND DRAINAGE PLANS FOR DRAINAGE RELATED WORK.
4. SEE EARLY WORKS PACKAGE 3 TRACK SIGNAL DRAWINGS FOR SIGNAL RELATED WORK IN THIS PHASE.

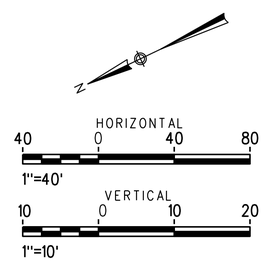

NOT FOR CONSTRUCTION

Preliminary

THE PREPARATION OF THIS DRAWING HAS BEEN FINANCED IN PART THROUGH A GRANT FROM THE U.S. DEPARTMENT OF TRANSPORTATION, FEDERAL TRANSIT ADMINISTRATION (FTA), UNDER THE FEDERAL TRANSIT ACT OF 1964, AS AMENDED, AND IN PART BY THE TAXES OF THE CITIZENS OF LOS ANGELES COUNTY AND OF THE STATE OF CALIFORNIA.

REV	DATE	BY	APP	REG NO	EXPIRES	SEAL HOLDER	DESCRIPTION

DESIGNED BY Z. MACDONELL
DRAWN BY M. ORTIZ
CHECKED BY A. MULL
IN CHARGE A. MULL
DATE XX/XX/2024

Metro
LOS ANGELES COUNTY
METROPOLITAN TRANSPORTATION AUTHORITY

HDR
HDR ENGINEERING
350 S. GRAND AVENUE
SUITE 2900
LOS ANGELES, CA 90071
(213) 239-5800

LINK UNION STATION PROJECT
TRACK DRAWINGS - EAST AREA 2
TRACK PLAN AND PROFILE
SHEET 5 OF 5

CONTRACT NO PS2415-3172
DRAWING NO TP-305-E2
REV 0
SCALE HORIZ: 1"=40'
VERT: 1"=10'
SHEET NO 23

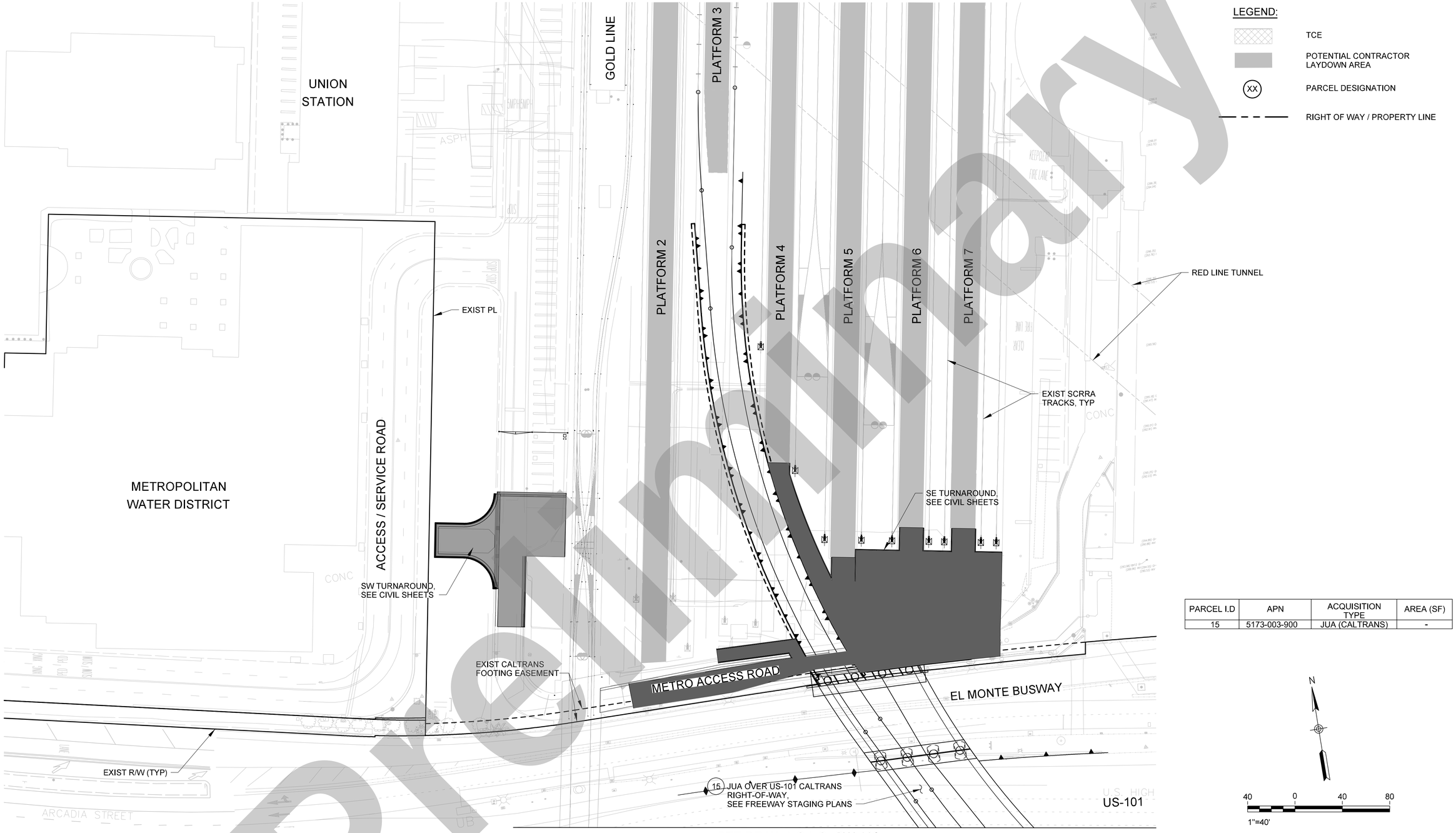

LEGEND:

- TCE
- POTENTIAL CONTRACTOR LAYDOWN AREA
- (XX) PARCEL DESIGNATION
- RIGHT OF WAY / PROPERTY LINE

PARCEL I.D	APN	ACQUISITION TYPE	AREA (SF)
15	5173-003-900	JUA (CALTRANS)	-

N

40 0 40 80

1"=40'

NOT FOR CONSTRUCTION

Preliminary

THE PREPARATION OF THIS DRAWING HAS BEEN FINANCED IN PART THROUGH A GRANT FROM THE U.S. DEPARTMENT OF TRANSPORTATION, FEDERAL TRANSIT ADMINISTRATION (FTA), UNDER THE FEDERAL TRANSIT ACT OF 1964, AS AMENDED, AND IN PART BY THE TAXES OF THE CITIZENS OF LOS ANGELES COUNTY AND OF THE STATE OF CALIFORNIA.

REV	DATE	BY	APP	REG NO	EXPIRES	SEAL HOLDER	DESCRIPTION

DESIGNED BY	D.WEDDELL
DRAWN BY	J. MAY
CHECKED BY	M. COOLEY
IN CHARGE	A. MULL
DATE	02/13/2025

Metro
LOS ANGELES COUNTY
METROPOLITAN TRANSPORTATION AUTHORITY
HDR
350 S. GRAND AVENUE
SUITE 2900
LOS ANGELES, CA 90071
(213) 239-5800

RIGHT OF WAY
MAP
SHEET 1 OF 8

CONTRACT NO	PS2415-3172
DRAWING NO	RW-101
REV	0
SCALE	1"=40'
SHEET NO	24

Plot Driver=$PLTDRVS$ Pentable=PlotStamp.tbl USER = MESQUER 4:13:08 PM 2/21/2025 $FILE$

SEE DRAWING NO. RW-101

SB US-101

JUA OVER CALTRANS
RIGHT-OF-WAY

EXIST
STATE R/W

SB US-101
ON-RAMP

EXIST
STATE R/W

SB US-101
OFF-RAMP

JUA OVER US-101
CALTRANS RIGHT-OF-WAY,
SEE FREEWAY STAGING PLANS (15)

METRO

(41) CALTRANS

(42) CALTRANS

METRO

PROP CITY R/W

5'

PROP DEDICATION
TO CITY OF LA

EXIST CITY R/W

EXIST
STATE R/W

COMMERCIAL STREET

COMMERCIAL STREET

ASPH

EXIST
CITY R/W (TYP)

EXIST CITY R/W

EXIST CITY R/W

N. GAREY STREET

LAPD
STORAGE

EXIST CITY R/W

PARKING LOT

N. VIGNES STREET

LADOT BUS MAINTENANCE
FACILITY

DIRT

DIRT

AMAYS BAKERY &
NOODLE CO

EXIST PL

DEJA VU

DUCOMMUN STREET

DUCOMMUN STREET

ASPH

SEE DRAWING NO. RW-103

LEGEND:

- TCE
- POTENTIAL CONTRACTOR LAYDOWN AREA
- PROPERTY DEDICATION TO CITY OF LA
- (XX) PARCEL DESIGNATION
- RIGHT OF WAY / PROPERTY LINE
- PROP CITY OF LA R/W PRIVATE PROPERTY

PARCEL I.D	APN	ACQUISITION TYPE	AREA (SF)
15.	5173-003-900	JUA (CALTRANS)	-
41.	-	JUA (CALTRANS)	6,560
42.	-	JUA (CALTRANS)	9,844

N

40 0 40 80

1"=40'

NOT FOR CONSTRUCTION

Preliminary

THE PREPARATION OF THIS DRAWING HAS BEEN FINANCED IN PART THROUGH A GRANT FROM THE U.S. DEPARTMENT OF TRANSPORTATION, FEDERAL TRANSIT ADMINISTRATION (FTA), UNDER THE FEDERAL TRANSIT ACT OF 1964, AS AMENDED, AND IN PART BY THE TAXES OF THE CITIZENS OF LOS ANGELES COUNTY AND OF THE STATE OF CALIFORNIA.

REV	DATE	BY	APP	REG NO	EXPIRES	SEAL HOLDER	DESCRIPTION

DESIGNED BY D. WEDDELL
DRAWN BY J. MAY
CHECKED BY M. COOLEY
IN CHARGE A. MULL
DATE 02/13/2025

Metro
LOS ANGELES COUNTY
METROPOLITAN TRANSPORTATION AUTHORITY

HDR
350 S. GRAND AVENUE
SUITE 2900
LOS ANGELES, CA 90071
(213) 239-5800

RIGHT OF WAY
MAP
SHEET 2 OF 8

CONTRACT NO PS2415-3172
DRAWING NO RW-102 REV 0
SCALE 1"=40'
SHEET NO 25

$FILE$
Plot Driver=$PLTDRV$ Pentable=PlotStamp.tbl USER = MESQUER 3:02:08 PM 2/21/2025



PARCEL I.D.	APN	ACQUISITION TYPE	AREA (SF)
34.	5173-020-813	TCE (BNSF)	15,068
34-1.	5173-021-811	TCE (BNSF)	8,314
35-1.		TCE (AMTRAK)	6,801

NOT FOR CONSTRUCTION

Preliminary

THE PREPARATION OF THIS DRAWING HAS BEEN FINANCED IN PART THROUGH A GRANT FROM THE U.S. DEPARTMENT OF TRANSPORTATION, FEDERAL TRANSIT ADMINISTRATION (FTA), UNDER THE FEDERAL TRANSIT ACT OF 1964, AS AMENDED, AND IN PART BY THE TAXES OF THE CITIZENS OF LOS ANGELES COUNTY AND OF THE STATE OF CALIFORNIA.

REV	DATE	BY	APP	REG NO	EXPIRES	SEAL HOLDER	DESCRIPTION

DESIGNED BY D. WEDDELL
DRAWN BY J. MAY
CHECKED BY M. COOLEY
IN CHARGE A. MULL
DATE 2/13/2025

Metro
LOS ANGELES COUNTY
METROPOLITAN TRANSPORTATION AUTHORITY
HDR
350 S. GRAND AVENUE
SUITE 2900
LOS ANGELES, CA 90071
(213) 239-5800

RIGHT OF WAY MAP
SHEET 3 OF 8

CONTRACT NO PS2415-3172
DRAWING NO RW-103
REV 0
SCALE 1"=40'
SHEET NO 26

Plot Driver=$PLTDRVS$ Pentable=PlotStamp.tbl USER = MESQUER 3:01:00 PM 2/21/2025 $FILE$

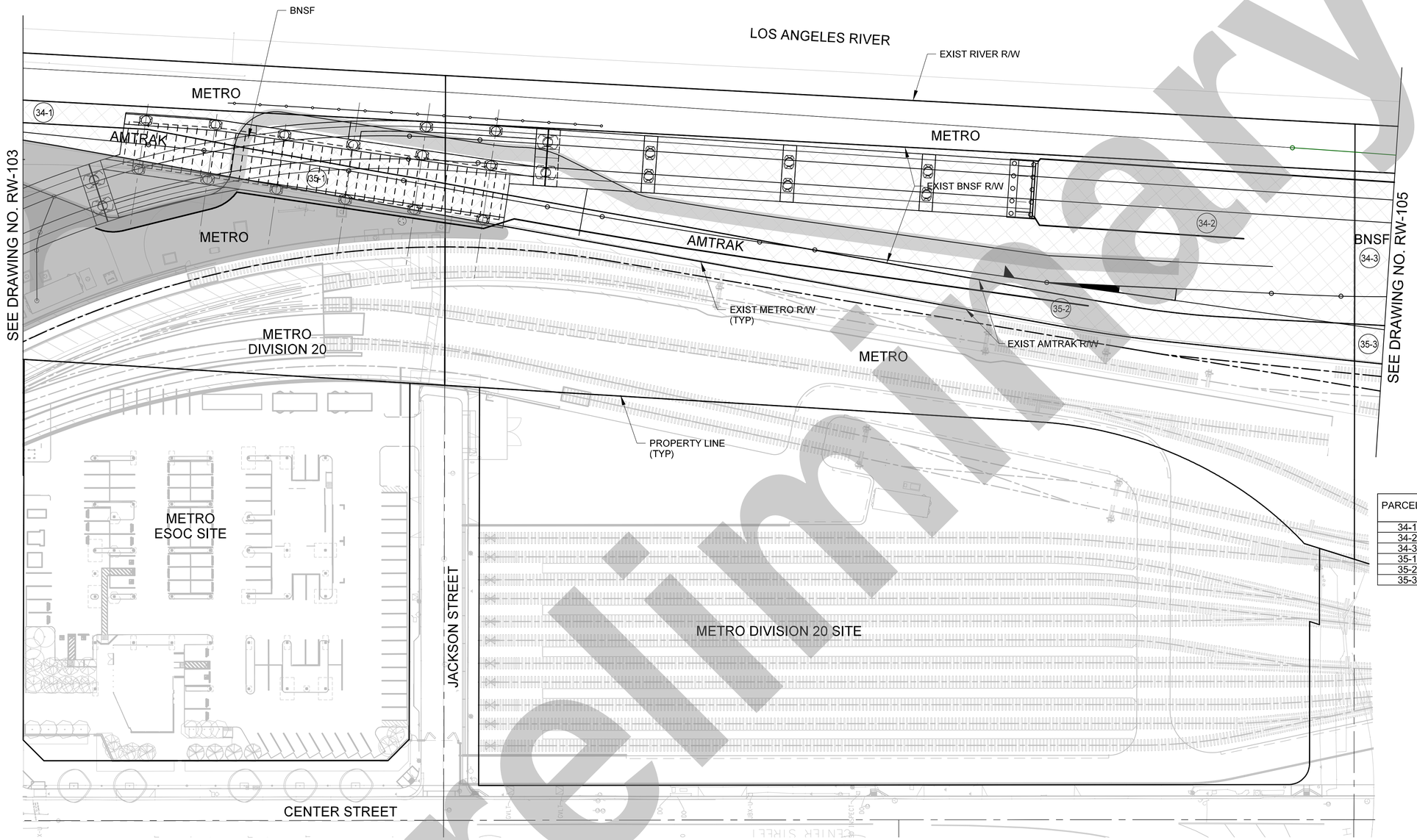

LEGEND:

- TCE
- POTENTIAL CONTRACTOR LAYDOWN AREA
- (XX) PARCEL DESIGNATION
- RIGHT OF WAY / PROPERTY LINE

PARCEL I.D	APN	ACQUISITION TYPE	AREA (SF)
34-1.	5173-021-811	TCE (BNSF)	8,314
34-2.	5173-022-808	TCE (BNSF)	54,376
34-3.	5173-023-805	TCE (BNSF)	31,960
35-1.		TCE (AMTRAK)	6,801
35-2.		TCE (AMTRAK)	14,960
35-3.		TCE (AMTRAK)	9,653

N

40 0 40 80

1"=40'

NOT FOR CONSTRUCTION

Preliminary

THE PREPARATION OF THIS DRAWING HAS BEEN FINANCED IN PART THROUGH A GRANT FROM THE U.S. DEPARTMENT OF TRANSPORTATION, FEDERAL TRANSIT ADMINISTRATION (FTA), UNDER THE FEDERAL TRANSIT ACT OF 1964, AS AMENDED, AND IN PART BY THE TAXES OF THE CITIZENS OF LOS ANGELES COUNTY AND OF THE STATE OF CALIFORNIA.

REV	DATE	BY	APP	REG NO	EXPIRES	SEAL HOLDER	DESCRIPTION

DESIGNED BY D. WEDDELL
DRAWN BY J. MAY
CHECKED BY M. COOLEY
IN CHARGE A. MULL
DATE 2/13/2025

Metro
LOS ANGELES COUNTY
METROPOLITAN TRANSPORTATION AUTHORITY
HDR
350 S. GRAND AVENUE
SUITE 2900
LOS ANGELES, CA 90071
(213) 239-5800

RIGHT OF WAY NEEDS MAP
SHEET 4 OF 8

CONTRACT NO PS2415-3172
DRAWING NO RW-104 REV 0
SCALE 1"=40'
SHEET NO 27

Plot Driver=$PLTDRV$$ Pentable=PlotStamp.tbl USER = MESQUER 2:58:49 PM 2/21/2025 $FILE$

LEGEND:

- TCE
- POTENTIAL CONTRACTOR LAYDOWN AREA
- (XX) PARCEL DESIGNATION
- RIGHT OF WAY / PROPERTY LINE

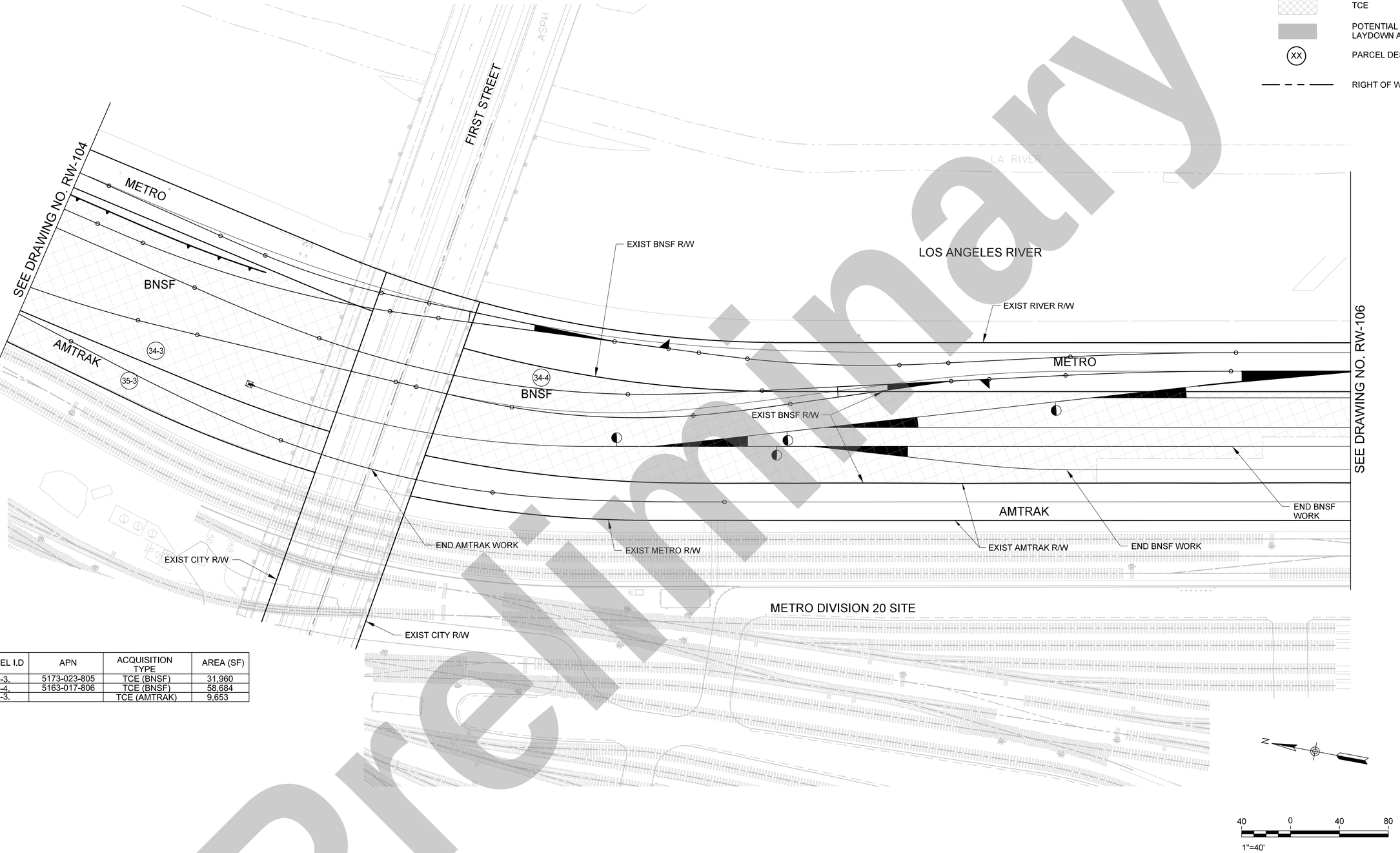

PARCEL I.D	APN	ACQUISITION TYPE	AREA (SF)
34-3.	5173-023-805	TCE (BNSF)	31,960
34-4.	5163-017-806	TCE (BNSF)	58,684
35-3.		TCE (AMTRAK)	9,653

NOT FOR CONSTRUCTION

Preliminary

THE PREPARATION OF THIS DRAWING HAS BEEN FINANCED IN PART THROUGH A GRANT FROM THE U.S. DEPARTMENT OF TRANSPORTATION, FEDERAL TRANSIT ADMINISTRATION (FTA), UNDER THE FEDERAL TRANSIT ACT OF 1964, AS AMENDED, AND IN PART BY THE TAXES OF THE CITIZENS OF LOS ANGELES COUNTY AND OF THE STATE OF CALIFORNIA.

REV	DATE	BY	APP	REG NO	EXPIRES	SEAL HOLDER	DESCRIPTION

DESIGNED BY D. WEDDELL
DRAWN BY J. MAY
CHECKED BY M. COOLEY
IN CHARGE A. MULL
DATE 02/13/2025

Metro
LOS ANGELES COUNTY
METROPOLITAN TRANSPORTATION AUTHORITY
HDR
350 S. GRAND AVENUE
SUITE 2900
LOS ANGELES, CA 90071
(213) 239-5800

RIGHT OF WAY NEEDS MAP
SHEET 5 OF 8

CONTRACT NO PS2415-3172
DRAWING NO RW-105
REV 0
SCALE 1"=40'
SHEET NO 28

Plot Driver=$PLTDRVS$ Pentable=PlotStamp.tbl USER = MESQUER 3:23:22 PM 2/21/2025 $FILE$

LEGEND:

- TCE
- POTENTIAL CONTRACTOR LAYDOWN AREA
- (XX) PARCEL DESIGNATION
- RIGHT OF WAY / PROPERTY LINE

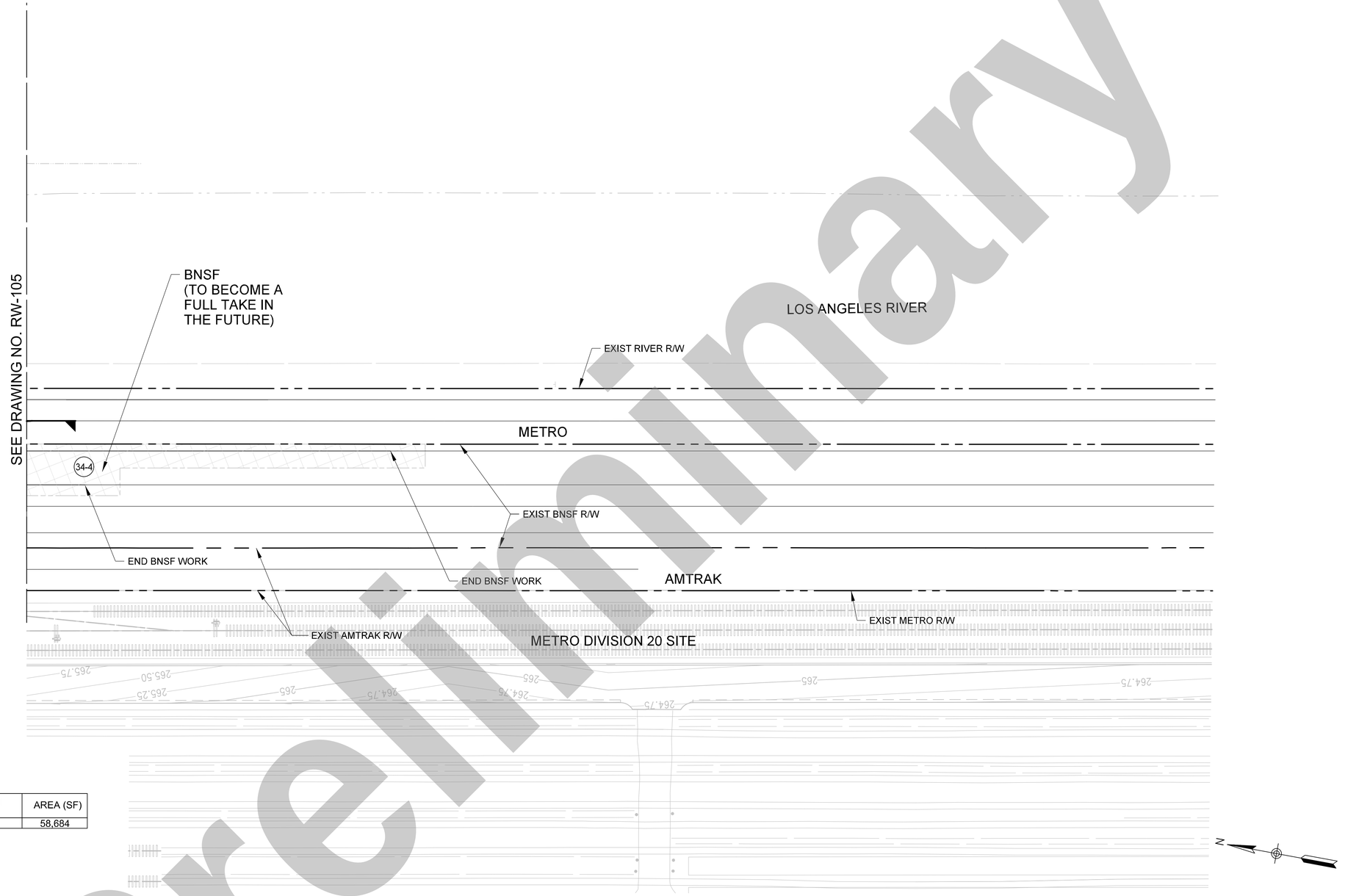

PARCEL I.D	APN	ACQUISITION TYPE	AREA (SF)
34-4	5163-017-806	TCE (BNSF)	58,684

NOT FOR CONSTRUCTION

Preliminary

THE PREPARATION OF THIS DRAWING HAS BEEN FINANCED IN PART THROUGH A GRANT FROM THE U.S. DEPARTMENT OF TRANSPORTATION, FEDERAL TRANSIT ADMINISTRATION (FTA), UNDER THE FEDERAL TRANSIT ACT OF 1964, AS AMENDED, AND IN PART BY THE TAXES OF THE CITIZENS OF LOS ANGELES COUNTY AND OF THE STATE OF CALIFORNIA.

REV	DATE	BY	APP	REG NO	EXPIRES	SEAL HOLDER	DESCRIPTION

DESIGNED BY D. WEDDELL
DRAWN BY J. MAY
CHECKED BY M. COOLEY
IN CHARGE A. MULL
DATE 02/13/2025

Metro
LOS ANGELES COUNTY
METROPOLITAN TRANSPORTATION AUTHORITY
HDR
350 S. GRAND AVENUE
SUITE 2900
LOS ANGELES, CA 90071
(213) 239-5800

RIGHT OF WAY NEEDS MAP
SHEET 6 OF 8

CONTRACT NO PS2415-3172
DRAWING NO RW-106
REV 0
SCALE 1"=40'
SHEET NO 29

Plot Driver=$PLTDRVS$ Pentable=PlotStamp.tbl USER = MESQUER 3:24:58 PM 2/21/2025 $FILE$

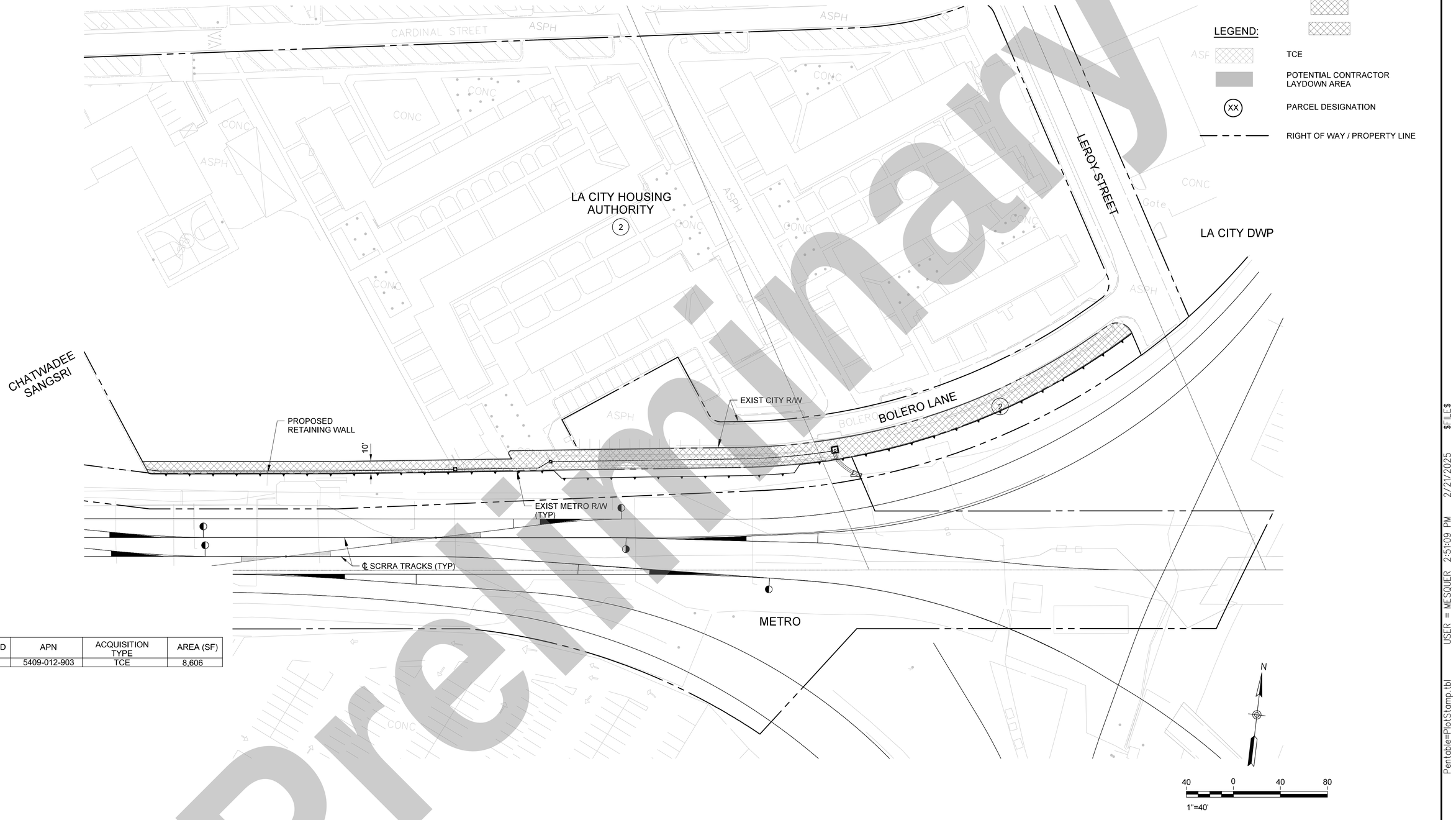

LEGEND:

- TCE
- POTENTIAL CONTRACTOR LAYDOWN AREA
- XX — PARCEL DESIGNATION
- RIGHT OF WAY / PROPERTY LINE

PARCEL I.D	APN	ACQUISITION TYPE	AREA (SF)
2.	5409-012-903	TCE	8,606

NOT FOR CONSTRUCTION

Preliminary

THE PREPARATION OF THIS DRAWING HAS BEEN FINANCED IN PART THROUGH A GRANT FROM THE U.S. DEPARTMENT OF TRANSPORTATION, FEDERAL TRANSIT ADMINISTRATION (FTA), UNDER THE FEDERAL TRANSIT ACT OF 1964, AS AMENDED, AND IN PART BY THE TAXES OF THE CITIZENS OF LOS ANGELES COUNTY AND OF THE STATE OF CALIFORNIA.

REV	DATE	BY	APP	REG NO	EXPIRES	SEAL HOLDER	DESCRIPTION

DESIGNED BY: D. WEDDELL
DRAWN BY: J. MAY
CHECKED BY: M. COOLEY
IN CHARGE: A. MULL
DATE: 02/13/2025

Metro
LOS ANGELES COUNTY
METROPOLITAN TRANSPORTATION AUTHORITY
HDR
350 S. GRAND AVENUE
SUITE 2900
LOS ANGELES, CA 90071
(213) 239-5800

RIGHT OF WAY MAP
SHEET 7 OF 8

CONTRACT NO: PS2415-3172
DRAWING NO: RW-107
REV: 0
SCALE: 1"=40'
SHEET NO: 30

Plot Driver=$PLTDRVS$ Pentable=PlotStamp.tbl USER = MESQUER 2:51:09 PM 2/21/2025 $FILE$



LEGEND:

- TCE
- POTENTIAL CONTRACTOR LAYDOWN AREA
- (XX) PARCEL DESIGNATION
- RIGHT OF WAY / PROPERTY LINE

N

40 0 40 80

1"=40'

NOT FOR CONSTRUCTION

Preliminary

THE PREPARATION OF THIS DRAWING HAS BEEN FINANCED IN PART THROUGH A GRANT FROM THE U.S. DEPARTMENT OF TRANSPORTATION, FEDERAL TRANSIT ADMINISTRATION (FTA), UNDER THE FEDERAL TRANSIT ACT OF 1964, AS AMENDED, AND IN PART BY THE TAXES OF THE CITIZENS OF LOS ANGELES COUNTY AND OF THE STATE OF CALIFORNIA.

REV	DATE	BY	APP	REG NO	EXPIRES	SEAL HOLDER	DESCRIPTION

DESIGNED BY	D. WEDDELL
DRAWN BY	J. MAY
CHECKED BY	M. COOLEY
IN CHARGE	A. MULL
DATE	02/13/2025

Metro
LOS ANGELES COUNTY
METROPOLITAN TRANSPORTATION AUTHORITY

HDR
350 S. GRAND AVENUE
SUITE 2900
LOS ANGELES, CA 90071
(213) 239-5800

RIGHT OF WAY NEEDS MAP SHEET 8 OF 8

CONTRACT NO	PS2415-3172
DRAWING NO	RW-108
REV	0
SCALE	1"=40'
SHEET NO	31

Plot Driver=$PLTDRV$$ Pentable=PlotStamp.tbl USER = MESQUER 2:57:06 PM 2/21/2025 $FILE$

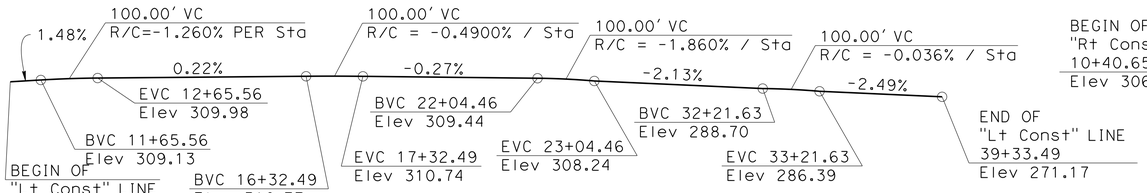

TOP OF RAIL PROFILE GRADE - "Lt Const" LINE

NO SCALE

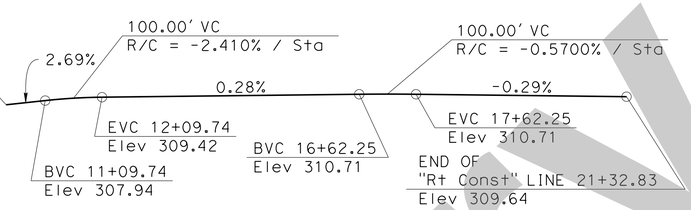

TOP OF RAIL PROFILE GRADE - "Rt Const" LINE

NO SCALE

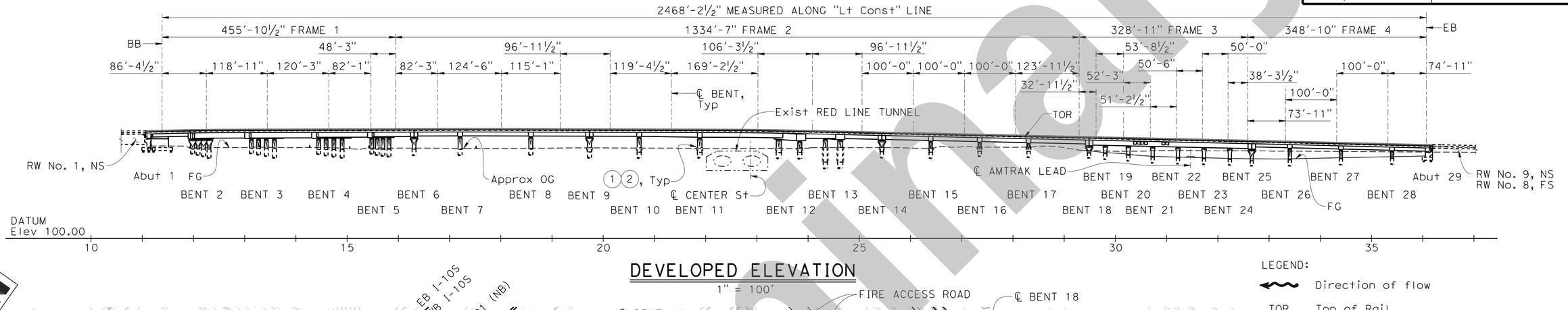

DEVELOPED ELEVATION

1" = 100'

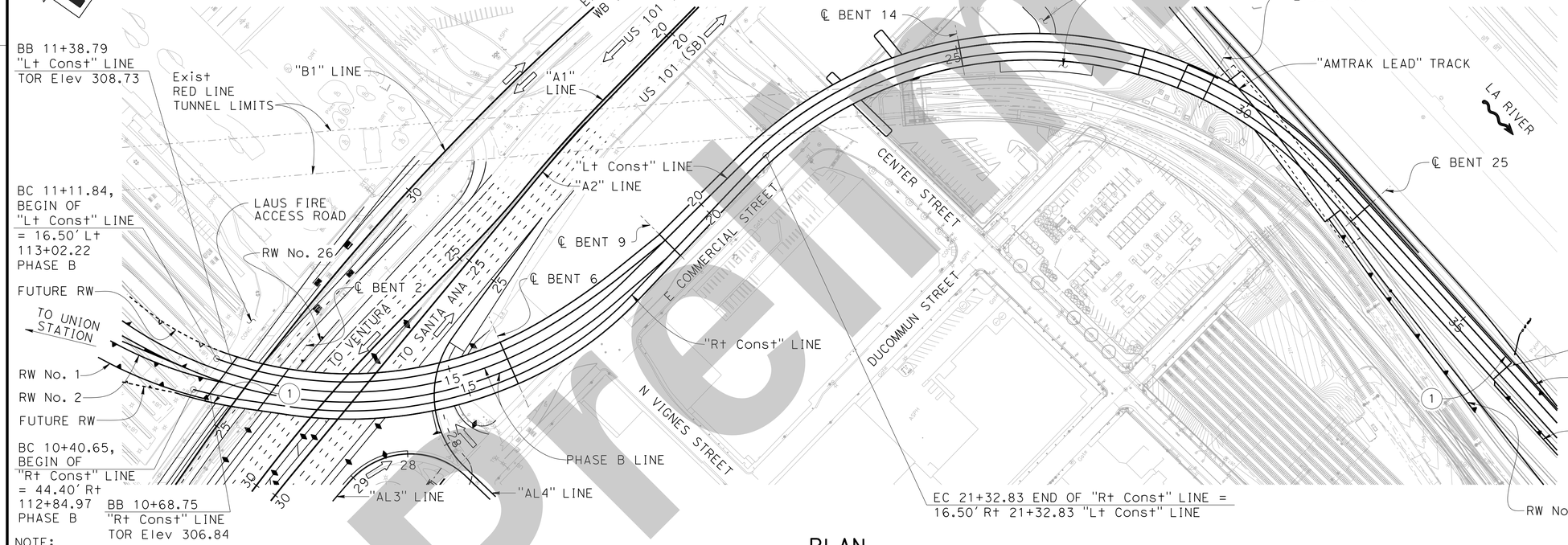

PLAN

1" = 100'

NOTE:
THE CONTRACTOR MUST VERIFY ALL CONTROLLING FIELD DIMENSIONS BEFORE ORDERING OR FABRICATING ANY MATERIAL.

LEGEND:

- Direction of flow
- TOR Top of Rail
- Deck Expansion Joint

NOTES:

1. For more information, see "STRUCTURE PLAN No. 1" thru "STRUCTURE PLAN No. 6" sheets.
2. For Typical Sections, see "GENERAL SECTIONS No. 1" thru "GENERAL SECTIONS No. 8" sheets.
3. For foundation info, see "FOUNDATION PLAN No. 1" thru "FOUNDATION PLAN No. 6" sheets. For "PILE DATA TABLE", see "FOUNDATION DATA" sheet.

(1) PAINT "BRIDGE NAME
BRIDGE No." XXXX
Year Constructed

(2) Paint Bent Number

FOR BRIDGE ARCHITECTURAL TREATMENT, SEE "ARCHITECTURAL CONCEPT" SHEETS.

INTERMEDIATE SUBMITTAL - 02/21/25

Dist	COUNTY	ROUTE	POST MILES TOTAL PROJECT	SHEET No.	TOTAL SHEETS
07	LA	105, 101	17.0/17.3, 04./0.7	X	X

REGISTERED CIVIL ENGINEER — DATE

X
PLANS APPROVAL DATE

REGISTERED PROFESSIONAL ENGINEER — Montserrat Martin — No. C64771 — Exp. 6/30/25 — CIVIL — STATE OF CALIFORNIA

THE STATE OF CALIFORNIA OR ITS OFFICERS OR AGENTS SHALL NOT BE RESPONSIBLE FOR THE ACCURACY OR COMPLETENESS OF SCANNED COPIES OF THIS PLAN SHEET.

HDR, INC
3220 EL CAMINO REAL
SUITE 200
IRVINE, CA 92602

LA METRO
ONE GATEWAY PLAZA
LOS ANGELES, CA 90012

X DESIGN OVERSIGHT	DESIGN	BY M. Martin/A. Banesh	CHECKED X	SEISMIC ANALYSIS	BY G. Knutson	CHECKED X	PREPARED FOR THE STATE OF CALIFORNIA DEPARTMENT OF TRANSPORTATION
X SIGN OFF DATE	DETAILS	BY R. Ewing	CHECKED X	LAYOUT	BY A. Banesh	CHECKED X	
	QUANTITIES	BY X	CHECKED X	SPECIFICATIONS	BY X	PLANS AND SPECS COMPARED	

Daniel Weddell
PROJECT ENGINEER

BRIDGE No.	LAUS VIADUCT OVER US-101
X	
POST MILE	GENERAL PLAN
0.56	

STRUCTURES DESIGN GENERAL PLAN SHEET (ENGLISH) (REVISION 2/8/2022)

DATE PLOTTED => 2/20/2025 TIME PLOTTED => 6:32:13 PM
FILE => General Plan No_1 USERNAME => ABANESH

ORIGINAL SCALE IN INCHES FOR REDUCED PLANS 0 1 2 3

PROJECT NUMBER & PHASE: 07150001191
COUNTY/ROUTE: LA/101
CONTRACT No.: 07-220001

DISREGARD PRINTS BEARING EARLIER REVISION DATES →

REVISION DATES				SHEET	OF
2/21/25				1	171

SHEET NO 32

Preliminary

Dist	COUNTY	ROUTE	POST MILES TOTAL PROJECT	SHEET No.	TOTAL SHEETS
07	LA	105, 101	17.0/17.3, 0.4/0.7	X	X

X
REGISTERED CIVIL ENGINEER — DATE

X
PLANS APPROVAL DATE

REGISTERED PROFESSIONAL ENGINEER — Montserrat Martin — No. C64771 — Exp. 6/30/25 — CIVIL — STATE OF CALIFORNIA

THE STATE OF CALIFORNIA OR ITS OFFICERS OR AGENTS SHALL NOT BE RESPONSIBLE FOR THE ACCURACY OR COMPLETENESS OF SCANNED COPIES OF THIS PLAN SHEET.

HDR, INC
3220 EL CAMINO REAL
SUITE 200
IRVINE, CA 92602

LA METRO
ONE GATEWAY PLAZA
LOS ANGELES, CA 90012

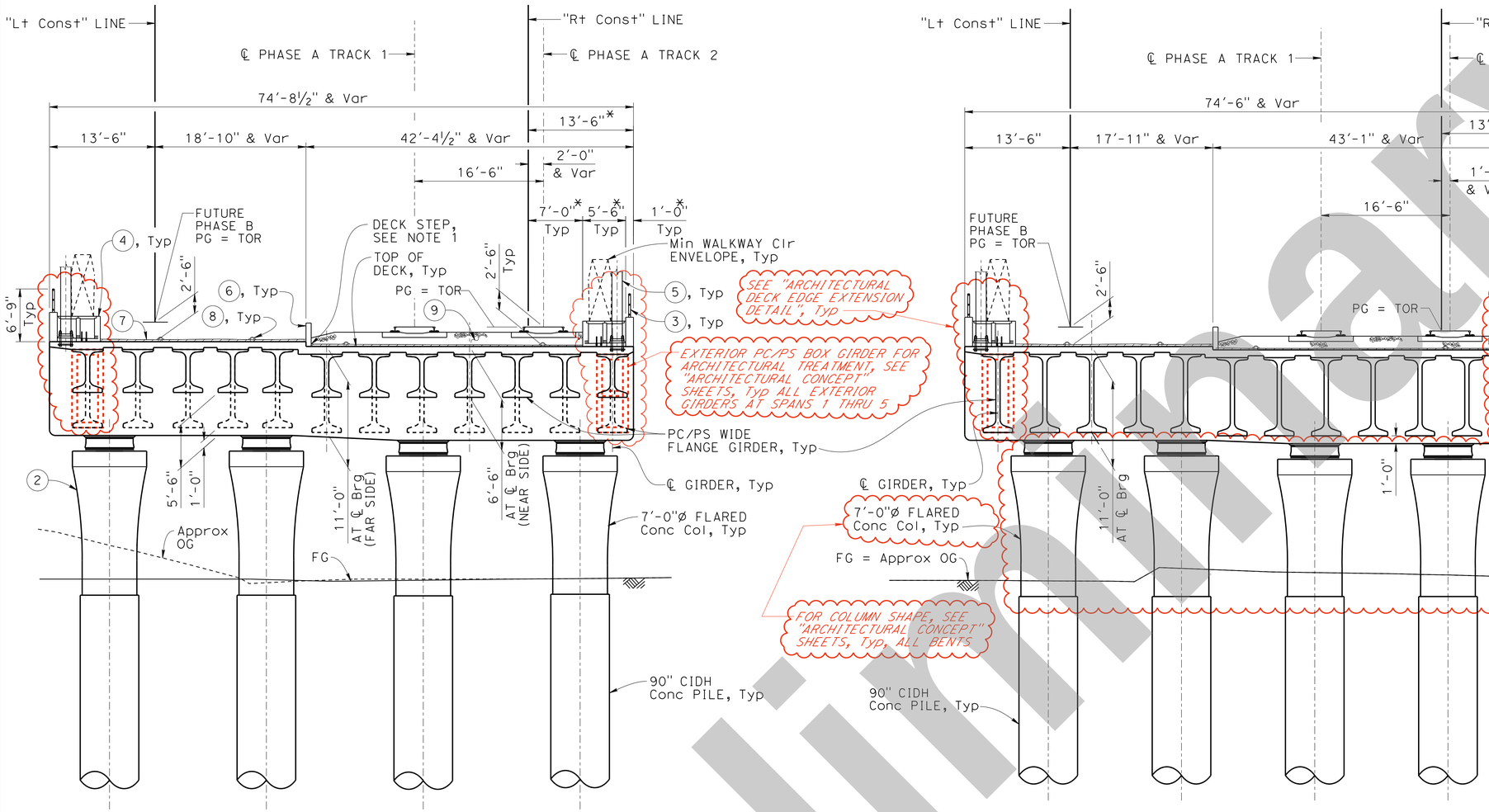

LEGEND:

* Measured normal to "Rt Const" Line

TOR Top Of Rail

NOTES:

1. For step dimensions, see "TOP OF DECK STEP DIMENSIONS" table.
2. All dimensions normal to "Lt Const" Line, unless noted otherwise. Dimensions shown are measured at each bent location.
3. Anchor bolts to be installed for OCS pole foundations and anchorages.

(2) Paint Bent Number
(3) Handrail
(4) Walkway/Duct Bank
(5) OCS Pole, see TRACK PLANS (Future)
(6) Concrete Ballast Curb
(7) HMA
(8) Drainage System
(9) Ballast

INTERMEDIATE SUBMITTAL - 02/21/25

BENT 2

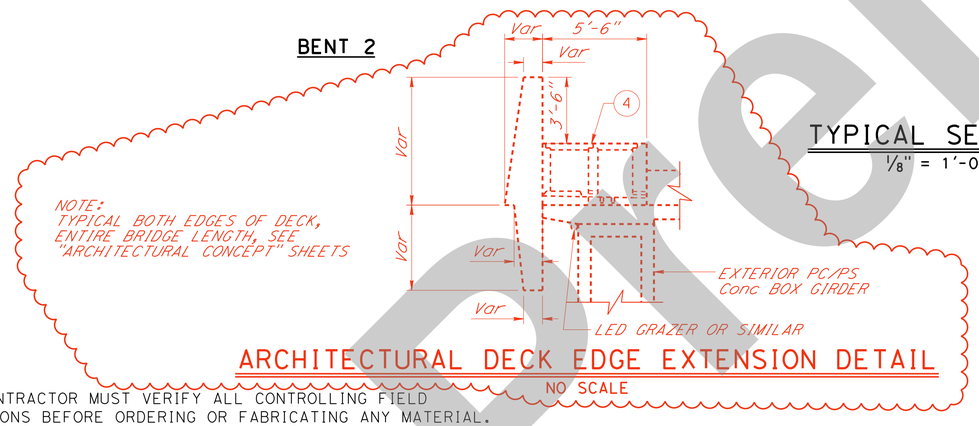

TYPICAL SECTION
⅛" = 1'-0"

ARCHITECTURAL DECK EDGE EXTENSION DETAIL
NO SCALE

NOTE:
THE CONTRACTOR MUST VERIFY ALL CONTROLLING FIELD DIMENSIONS BEFORE ORDERING OR FABRICATING ANY MATERIAL.

NOTE:
For information not shown, see "BENT 2". Bent 3 shown, Bents 4 and 5 are similar.

BENT 3

FOR BRIDGE ARCHITECTURAL TREATMENT, SEE "ARCHITECTURAL CONCEPT" SHEETS.

TOP OF DECK STEP DIMENSIONS	
LOCATIONS	STEP DIMENSIONS
℄ BEARING Abut 1	1'-2⅝"
℄ BENT 2	7⅜"
℄ BENT 3	5"
℄ BENT 4	3¼"
℄ BENT 5	2"

Preliminary

X
DESIGN OVERSIGHT

X
SIGN OFF DATE

	BY	CHECKED
DESIGN	A. Banesh	X
DETAILS	R. Ewing	X
QUANTITIES	X	X

PREPARED FOR THE STATE OF CALIFORNIA DEPARTMENT OF TRANSPORTATION

Daniel Weddell
PROJECT ENGINEER

BRIDGE No. X
POST MILE X

LAUS VIADUCT OVER US-101
GENERAL SECTIONS NO. 1

STRUCTURES DESIGN DETAIL SHEET (ENGLISH) (REVISION 8/16/2021)

DATE PLOTTED => 2/20/2025 TIME PLOTTED => 6:32:22 PM
FILE => General Sections No_1_B02 USERNAME => ABANESH
ORIGINAL SCALE IN INCHES FOR REDUCED PLANS 0 1 2 3

PROJECT NUMBER & PHASE: 07150001191
COUNTY/ROUTE: LA/101
CONTRACT No.: 07-220001

DISREGARD PRINTS BEARING EARLIER REVISION DATES →

REVISION DATES	SHEET	OF
2/21/25	2	171

Dist	COUNTY	ROUTE	POST MILES TOTAL PROJECT	SHEET No.	TOTAL SHEETS
07	LA	105, 101	17.0/17.3, 0.4/0.7	X	X

REGISTERED CIVIL ENGINEER — X DATE

PLANS APPROVAL DATE — X

REGISTERED PROFESSIONAL ENGINEER — Montserrat Martin — No. C64771 — Exp. 6/30/25 — CIVIL — STATE OF CALIFORNIA

THE STATE OF CALIFORNIA OR ITS OFFICERS OR AGENTS SHALL NOT BE RESPONSIBLE FOR THE ACCURACY OR COMPLETENESS OF SCANNED COPIES OF THIS PLAN SHEET.

HDR, INC
3220 EL CAMINO REAL
SUITE 200
IRVINE, CA 92602

LA METRO
ONE GATEWAY PLAZA
LOS ANGELES, CA 90012

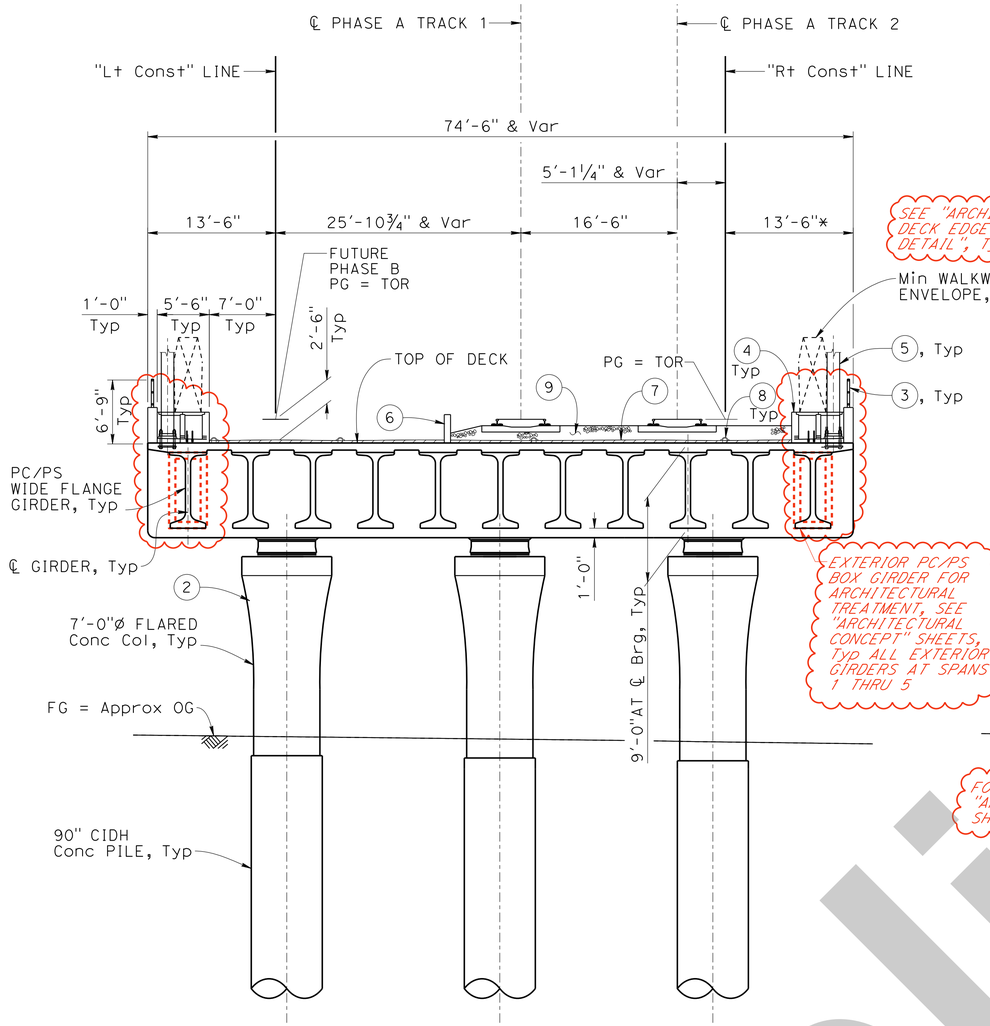

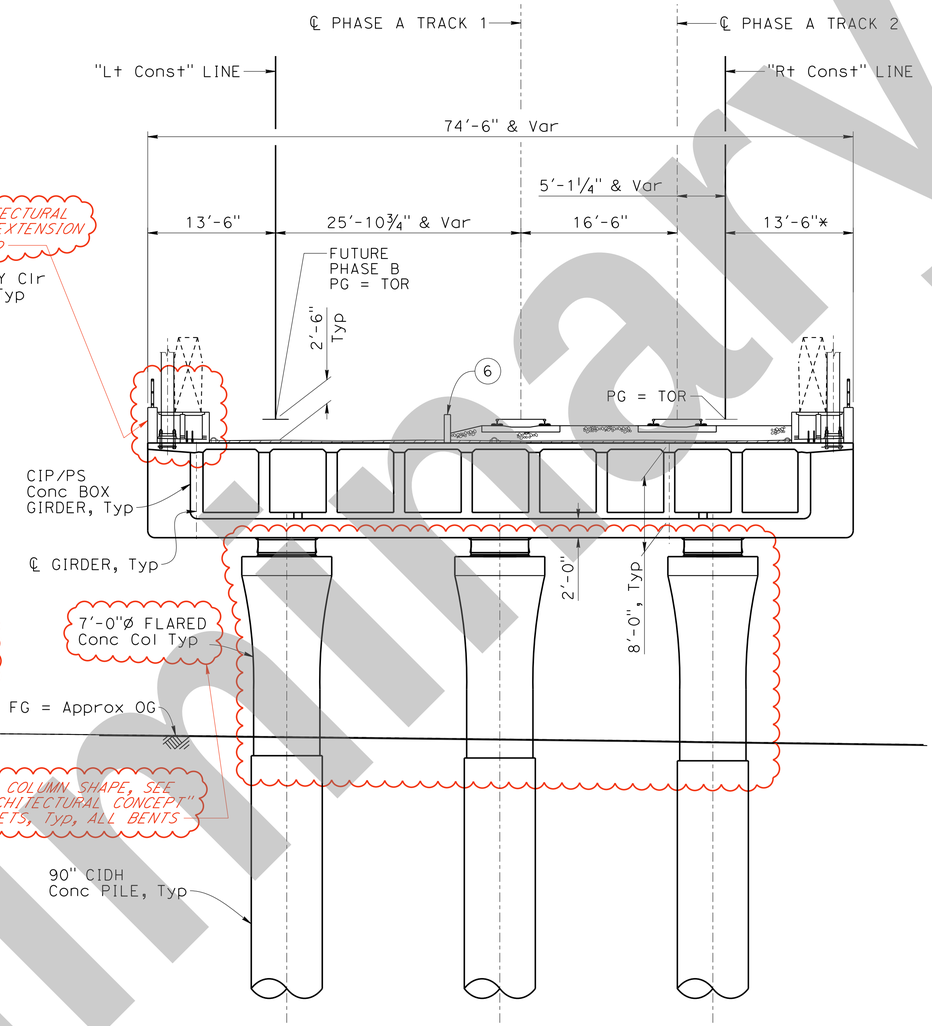

NOTE:
For information not shown, see "BENT 6 (NEAR SIDE)".

BENT 6 (NEAR SIDE)

TYPICAL SECTION
⅛" = 1'-0"

BENT 6 (FAR SIDE)

FOR BRIDGE ARCHITECTURAL TREATMENT, SEE "ARCHITECTURAL CONCEPT" SHEETS.

LEGEND:

* Measured normal to "Rt Const" Line

TOR Top Of Rail

NOTES:

1. All dimensions normal to "Lt Const" Line, unless noted otherwise. Dimensions shown are measured at each bent location.
2. Anchor bolts to be installed for OCS pole foundations and anchorages.

(2) Paint Bent Number
(3) Handrail
(4) Walkway/Duct Bank
(5) OCS Pole, see TRACK PLANS (Future)
(6) Concrete Ballast Curb
(7) HMA
(8) Drainage System
(9) Ballast

NOTES:

1. For step dimensions, see "TOP OF DECK STEP DIMENSIONS" table.
2. All dimensions normal to "Lt Const" Line, unless noted otherwise. Dimensions shown are measured at each bent location.
3. Anchor bolts to be installed for OCS pole foundations and anchorages.

NOTE:
THE CONTRACTOR MUST VERIFY ALL CONTROLLING FIELD DIMENSIONS BEFORE ORDERING OR FABRICATING ANY MATERIAL.

INTERMEDIATE SUBMITTAL - 02/21/25

Preliminary

X
DESIGN OVERSIGHT
X
SIGN OFF DATE

	BY	CHECKED
DESIGN	A. Banesh	X
DETAILS	R. Ewing	X
QUANTITIES	X	X

PREPARED FOR THE STATE OF CALIFORNIA DEPARTMENT OF TRANSPORTATION

Daniel Weddell
PROJECT ENGINEER

BRIDGE No. X
POST MILE X

LAUS VIADUCT OVER US-101
GENERAL SECTIONS NO. 2

STRUCTURES DESIGN DETAIL SHEET (ENGLISH) (REVISION 8/16/2021)

DATE PLOTTED => 2/20/2025 TIME PLOTTED => 6:32:27 PM
FILE => General Sections No_2_B06 USERNAME => ABANESH

ORIGINAL SCALE IN INCHES FOR REDUCED PLANS 0 1 2 3

PROJECT NUMBER & PHASE: 07150001191
COUNTY/ROUTE: LA/101
CONTRACT No.: 07-220001

DISREGARD PRINTS BEARING EARLIER REVISION DATES →

REVISION DATES	SHEET	OF
2/21/25	3	171

Dist	COUNTY	ROUTE	POST MILES TOTAL PROJECT	SHEET No.	TOTAL SHEETS
07	LA	105, 101	17.0/17.3, 0.4/0.7	X	X

REGISTERED CIVIL ENGINEER — X DATE

PLANS APPROVAL DATE — X

REGISTERED PROFESSIONAL ENGINEER — Montserrat Martin — No. C64771 — Exp. 6/30/25 — CIVIL — STATE OF CALIFORNIA

THE STATE OF CALIFORNIA OR ITS OFFICERS OR AGENTS SHALL NOT BE RESPONSIBLE FOR THE ACCURACY OR COMPLETENESS OF SCANNED COPIES OF THIS PLAN SHEET.

HDR, INC
3220 EL CAMINO REAL
SUITE 200
IRVINE, CA 92602

LA METRO
ONE GATEWAY PLAZA
LOS ANGELES, CA 90012

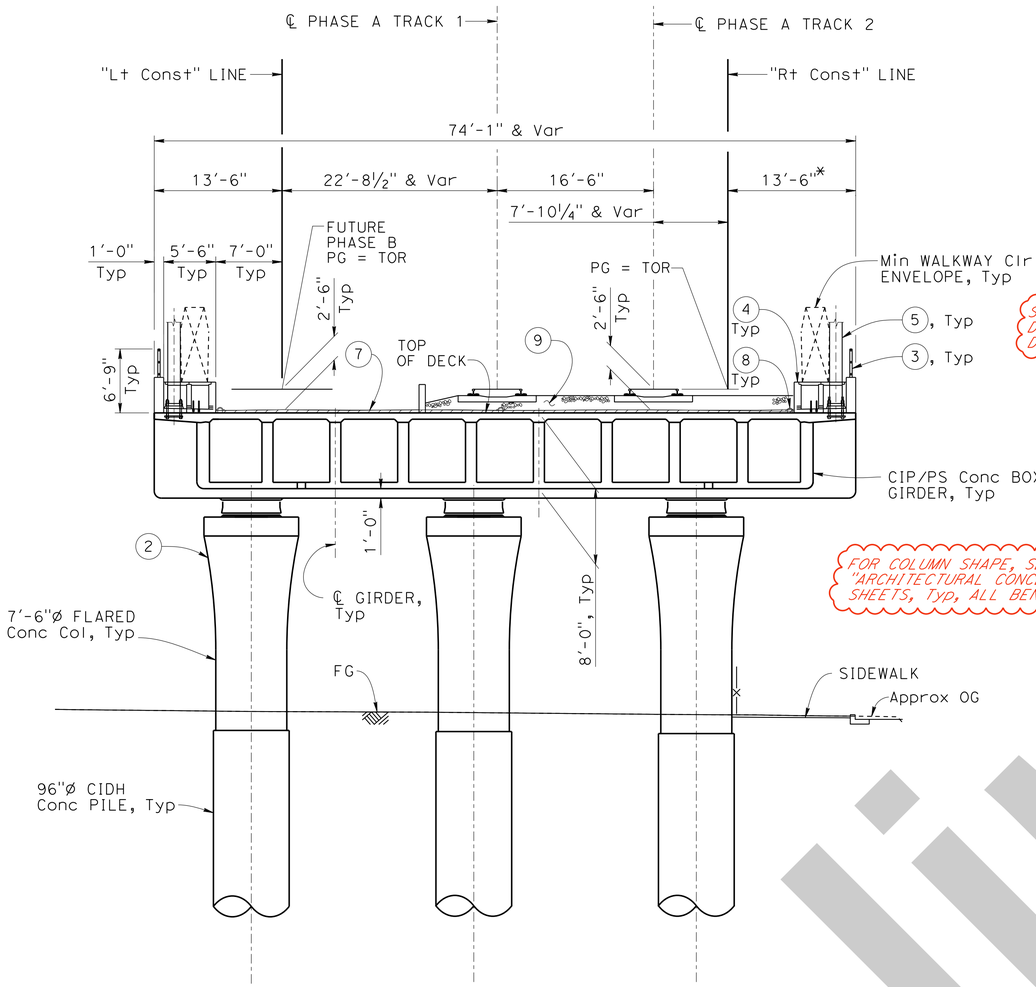

BENT 7

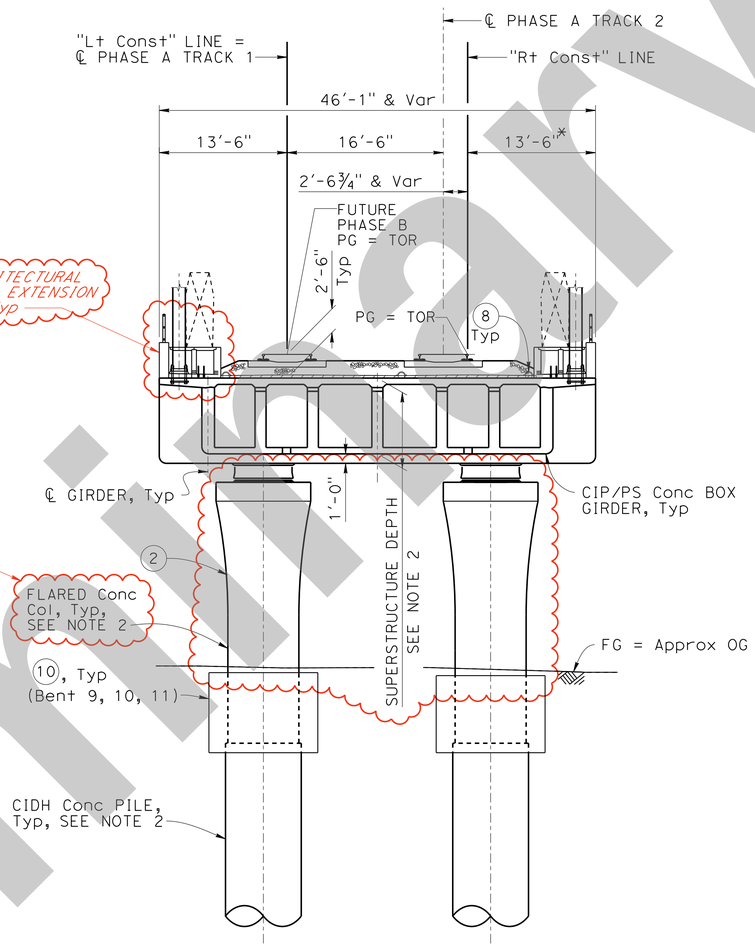

NOTE:
For information not shown, see "BENT 7".
Bent 10 shown, Bents 8, 9 and 11 similar except as noted.

BENT 10

LEGEND:

* Measured normal to "Rt Const" Line

TOR Top Of Rail

NOTES:

1. All dimensions normal to "Lt Const" Line, unless noted otherwise. Dimensions shown are measured at each bent location.
2. For column sizes, CIDH concrete pile sizes, and superstructure depths, see "BENT GEOMETRY TABLE".
3. Anchor bolts to be installed for OCS pole foundations and anchorages.

(2) Paint Bent Number
(3) Handrail
(4) Walkway/Duct Bank
(5) OCS Pole, see TRACK PLANS (Future)
(7) HMA
(8) Drainage System
(9) Ballast
(10) Column Isolation Casing

TYPICAL SECTION
⅛" = 1'-0"

FOR BRIDGE ARCHITECTURAL TREATMENT, SEE "ARCHITECTURAL CONCEPT" SHEETS.

BENT GEOMETRY TABLE

SUPPORT	COLUMN SIZE	CIDH PILE SIZE	SUPERSTRUCTURE DEPTH
BENT 8	7'-6"	96"	8'-0"
BENT 9	7'-6"	96"	8'-0"
BENT 10	7'-6"	96"	8'-0"
BENT 11	8'-6"	108"	9'-6"

NOTE:
THE CONTRACTOR MUST VERIFY ALL CONTROLLING FIELD DIMENSIONS BEFORE ORDERING OR FABRICATING ANY MATERIAL.

INTERMEDIATE SUBMITTAL - 02/21/25

Preliminary

X
DESIGN OVERSIGHT
X
SIGN OFF DATE

	BY	CHECKED
DESIGN	A. Banesh	X
DETAILS	R. Ewing	X
QUANTITIES	X	X

PREPARED FOR THE STATE OF CALIFORNIA DEPARTMENT OF TRANSPORTATION

Daniel Weddell
PROJECT ENGINEER

BRIDGE No. X
POST MILE X

LAUS VIADUCT OVER US-101
GENERAL SECTIONS NO. 3

STRUCTURES DESIGN DETAIL SHEET (ENGLISH) (REVISION 8/16/2021)

DATE PLOTTED => 2/20/2025 TIME PLOTTED => 6:32:32 PM
FILE => General Sections No_3_B07 USERNAME => ABANESH
ORIGINAL SCALE IN INCHES FOR REDUCED PLANS 0 1 2 3

PROJECT NUMBER & PHASE: 07150001191
COUNTY/ROUTE: LA/101
CONTRACT No.: 07-220001

DISREGARD PRINTS BEARING EARLIER REVISION DATES

REVISION DATES	SHEET	OF
2/21/25	4	171

Dist	COUNTY	ROUTE	POST MILES TOTAL PROJECT	SHEET No.	TOTAL SHEETS
07	LA	105, 101	17.0/17.3, 0.4/0.7	X	X

X
REGISTERED CIVIL ENGINEER — DATE

X
PLANS APPROVAL DATE

REGISTERED PROFESSIONAL ENGINEER — Montserrat Martin — No. C64771 — Exp. 6/30/25 — CIVIL — STATE OF CALIFORNIA

THE STATE OF CALIFORNIA OR ITS OFFICERS OR AGENTS SHALL NOT BE RESPONSIBLE FOR THE ACCURACY OR COMPLETENESS OF SCANNED COPIES OF THIS PLAN SHEET.

HDR, INC
3220 EL CAMINO REAL
SUITE 200
IRVINE, CA 92602

LA METRO
ONE GATEWAY PLAZA
LOS ANGELES, CA 90012

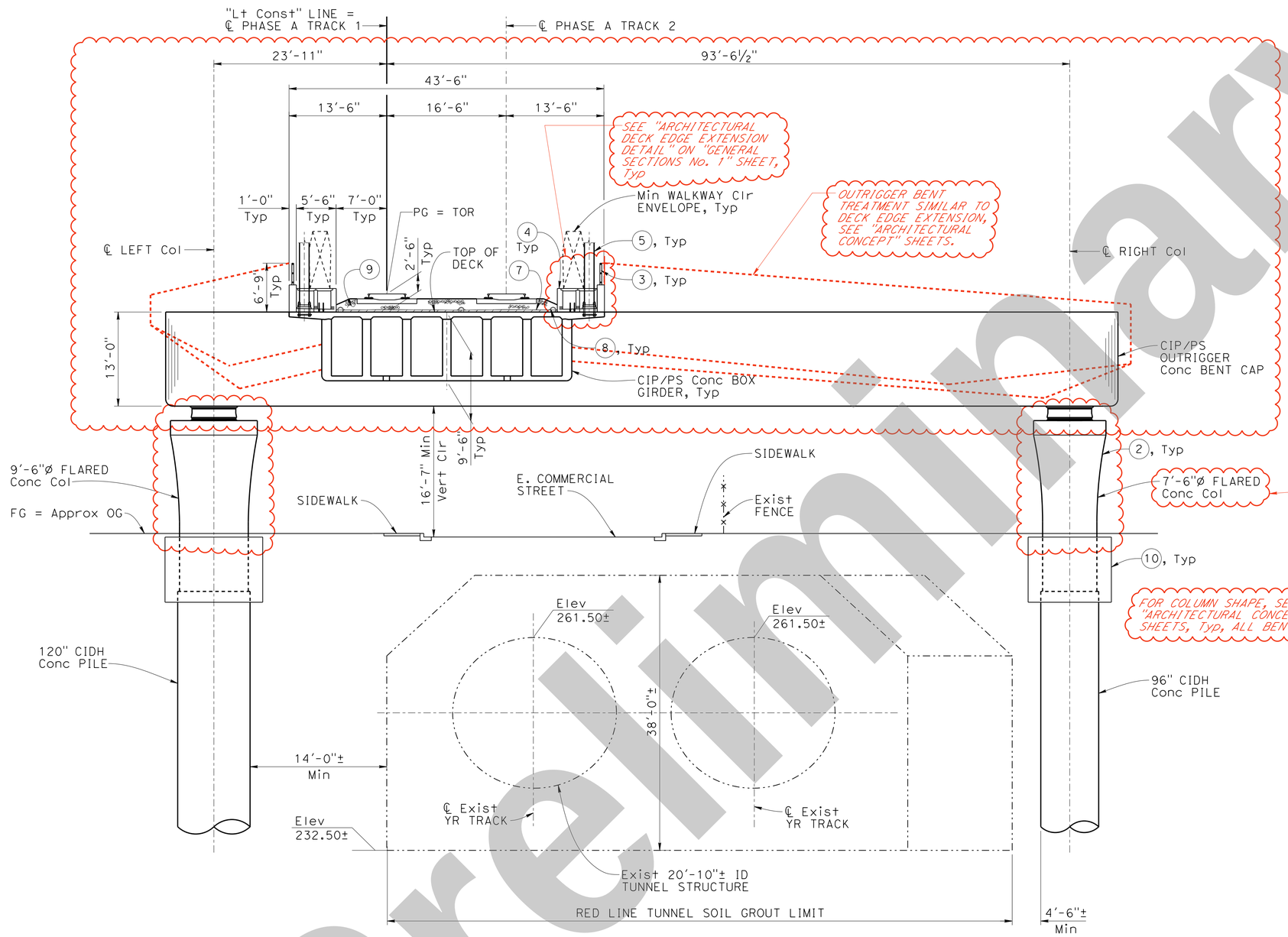

LEGEND:

TOR Top Of Rail

NOTES:

1. All dimensions normal to "Lt Const" Line, unless noted otherwise. Dimensions shown are measured at each bent location.
2. Anchor bolts to be installed for OCS pole foundations and anchorages.

(2) Paint Bent Number
(3) Handrail
(4) Walkway/Duct Bank
(5) OCS Pole, see TRACK PLANS (Future)
(7) HMA
(8) Drainage System
(9) Ballast
(10) Column Isolation Casing

BENT 12

TYPICAL SECTION

1/8" = 1'-0"

FOR BRIDGE ARCHITECTURAL TREATMENT, SEE "ARCHITECTURAL CONCEPT" SHEETS.

NOTE:
THE CONTRACTOR MUST VERIFY ALL CONTROLLING FIELD DIMENSIONS BEFORE ORDERING OR FABRICATING ANY MATERIAL.

INTERMEDIATE SUBMITTAL - 02/21/25

X
DESIGN OVERSIGHT

X
SIGN OFF DATE

	BY	CHECKED
DESIGN	A. Banesh	X
DETAILS	R. Ewing	X
QUANTITIES	X	X

PREPARED FOR THE STATE OF CALIFORNIA DEPARTMENT OF TRANSPORTATION

Daniel Weddell
PROJECT ENGINEER

BRIDGE NO. X
POST MILE X

LAUS VIADUCT OVER US-101
GENERAL SECTIONS NO. 4

STRUCTURES DESIGN DETAIL SHEET (ENGLISH) (REVISION 8/16/2021)

DATE PLOTTED => 2/20/2025 TIME PLOTTED => 6:32:40 PM
FILE => General Sections No_4_B12 USERNAME => ABANESH

ORIGINAL SCALE IN INCHES FOR REDUCED PLANS 0 1 2 3

PROJECT NUMBER & PHASE: 07150001191
COUNTY/ROUTE: LA/101
CONTRACT No.: 07-220001

DISREGARD PRINTS BEARING EARLIER REVISION DATES

REVISION DATES	SHEET	OF
2/21/25	5	171

SHEET NO 36

Preliminary

Dist	COUNTY	ROUTE	POST MILES TOTAL PROJECT	SHEET No.	TOTAL SHEETS
07	LA	105, 101	17.0/17.3, 0.4/0.7	X	X

X
REGISTERED CIVIL ENGINEER — DATE

X
PLANS APPROVAL DATE

REGISTERED PROFESSIONAL ENGINEER — Montserrat Martin — No. C64771 — Exp. 6/30/25 — CIVIL — STATE OF CALIFORNIA

THE STATE OF CALIFORNIA OR ITS OFFICERS OR AGENTS SHALL NOT BE RESPONSIBLE FOR THE ACCURACY OR COMPLETENESS OF SCANNED COPIES OF THIS PLAN SHEET.

HDR, INC
3220 EL CAMINO REAL
SUITE 200
IRVINE, CA 92602

LA METRO
ONE GATEWAY PLAZA
LOS ANGELES, CA 90012

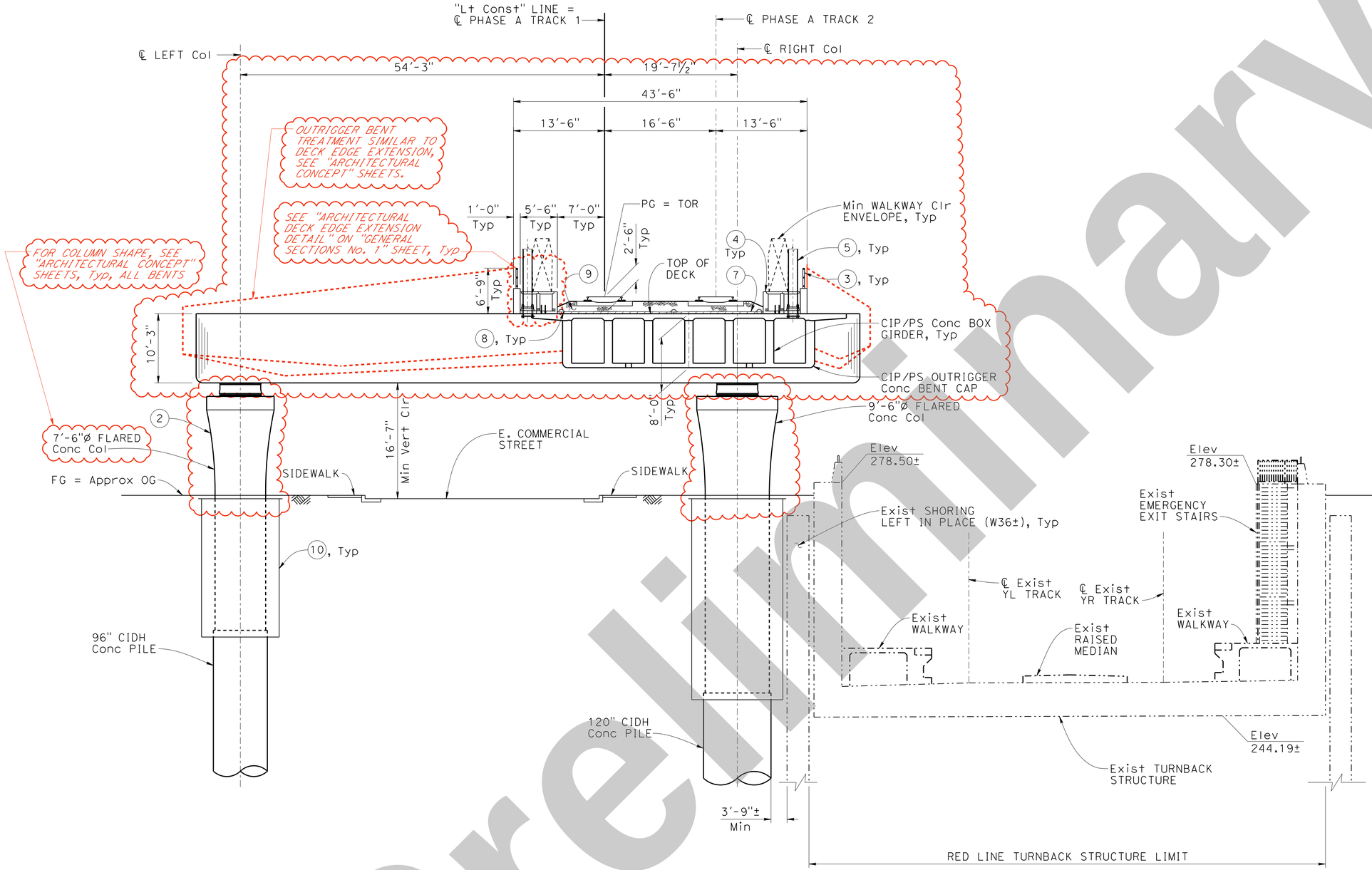

BENT 13

TYPICAL SECTION

1/8" = 1'-0"

LEGEND:

TOR Top Of Rail

NOTES:

1. All dimensions normal to "Lt Const" Line, unless noted otherwise. Dimensions shown are measured at each bent location.
2. Anchor bolts to be installed for OCS pole foundations and anchorages.

(2) Paint Bent Number
(3) Handrail
(4) Walkway/Duct Bank
(5) OCS Pole, see TRACK PLANS (Future)
(7) HMA
(8) Drainage System
(9) Ballast
(10) Column Isolation Casing

INTERMEDIATE SUBMITTAL - 02/21/25

NOTE:
THE CONTRACTOR MUST VERIFY ALL CONTROLLING FIELD DIMENSIONS BEFORE ORDERING OR FABRICATING ANY MATERIAL.

FOR BRIDGE ARCHITECTURAL TREATMENT, SEE "ARCHITECTURAL CONCEPT" SHEETS.

X
DESIGN OVERSIGHT

X
SIGN OFF DATE

	BY	CHECKED
DESIGN	A. Banesh	X
DETAILS	R. Ewing	X
QUANTITIES	X	X

PREPARED FOR THE STATE OF CALIFORNIA DEPARTMENT OF TRANSPORTATION

Daniel Weddell
PROJECT ENGINEER

BRIDGE No. X
POST MILE X

LAUS VIADUCT OVER US-101

GENERAL SECTIONS NO. 5

STRUCTURES DESIGN DETAIL SHEET (ENGLISH) (REVISION 8/16/2021)

DATE PLOTTED => 2/20/2025 TIME PLOTTED => 6:32:47 PM
FILE => General Sections No_5_B13 USERNAME => ABANESH
ORIGINAL SCALE IN INCHES FOR REDUCED PLANS 0 1 2 3

PROJECT NUMBER & PHASE: 07150001191
COUNTY/ROUTE: LA/101
CONTRACT No.: 07-220001

DISREGARD PRINTS BEARING EARLIER REVISION DATES

REVISION DATES	SHEET	OF
2/21/25	6	171

SHEET NO 37

Preliminary

Dist	COUNTY	ROUTE	POST MILES TOTAL PROJECT	SHEET No.	TOTAL SHEETS
07	LA	105, 101	17.0/17.3, 0.4/0.7	X	X

X
REGISTERED CIVIL ENGINEER — DATE

X
PLANS APPROVAL DATE

REGISTERED PROFESSIONAL ENGINEER — Montserrat Martin — No. C64771 — Exp. 6/30/25 — CIVIL — STATE OF CALIFORNIA

THE STATE OF CALIFORNIA OR ITS OFFICERS OR AGENTS SHALL NOT BE RESPONSIBLE FOR THE ACCURACY OR COMPLETENESS OF SCANNED COPIES OF THIS PLAN SHEET.

HDR, INC
3220 EL CAMINO REAL
SUITE 200
IRVINE, CA 92602

LA METRO
ONE GATEWAY PLAZA
LOS ANGELES, CA 90012

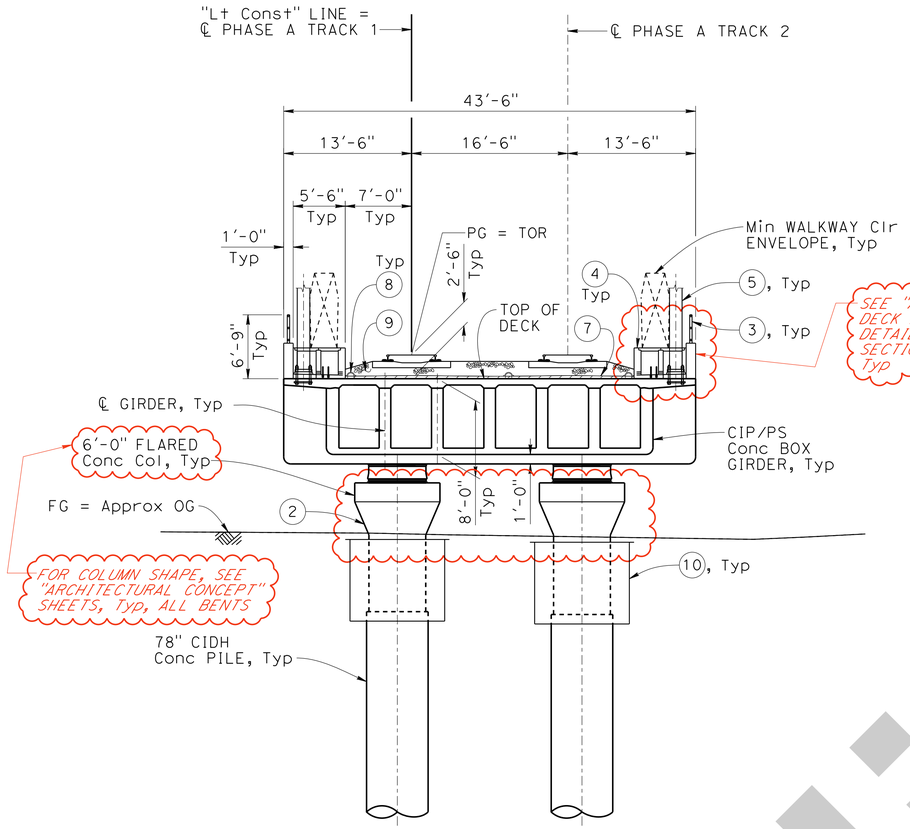

NOTE:
Bent 17 shown, Bents 14 to 16 are similar.

BENT 17

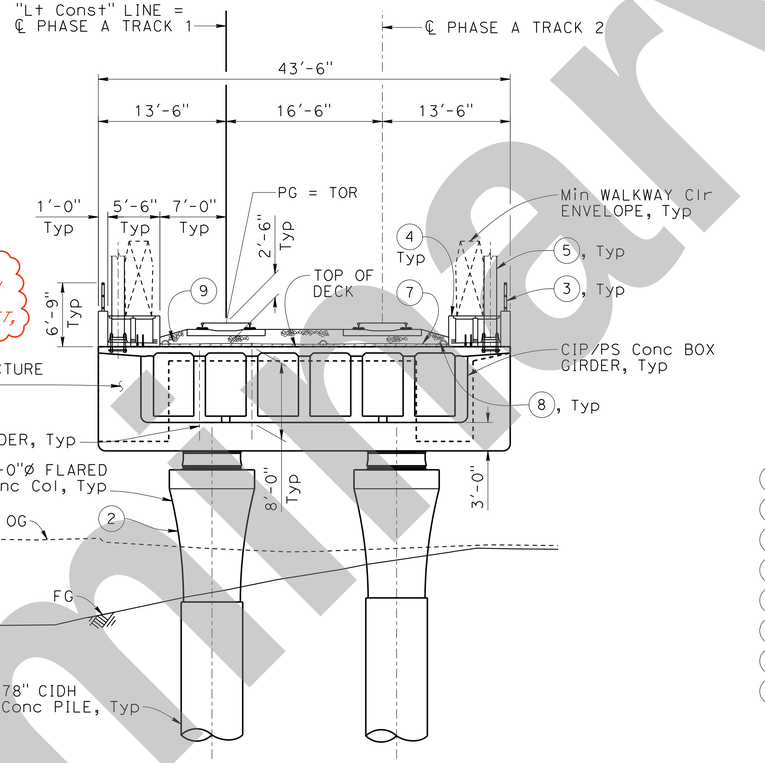

BENT 18 (NEAR SIDE)

TYPICAL SECTION

1/8" = 1'-0"

LEGEND:

TOR Top Of Rail

NOTES:

1. All dimensions normal to "Lt Const" Line, unless noted otherwise. Dimensions shown are measured at each bent location.
2. Anchor bolts to be installed for OCS pole foundations and anchorages.

(2) Paint Bent Number
(3) Handrail
(4) Walkway/Duct Bank
(5) OCS Pole, see TRACK PLANS (Future)
(7) HMA
(8) Drainage System
(9) Ballast
(10) Column Isolation Casing

1. All dimensions normal to "Lt Const" Line, unless noted otherwise. Dimensions shown are measured at each bent location.
2. Anchor bolts to be installed for OCS pole foundations and anchorages.

FOR BRIDGE ARCHITECTURAL TREATMENT, SEE "ARCHITECTURAL CONCEPT" SHEETS.

NOTE:
THE CONTRACTOR MUST VERIFY ALL CONTROLLING FIELD DIMENSIONS BEFORE ORDERING OR FABRICATING ANY MATERIAL.

INTERMEDIATE SUBMITTAL - 02/21/25

Preliminary

X
DESIGN OVERSIGHT

X
SIGN OFF DATE

	BY	CHECKED
DESIGN	A. Banesh	X
DETAILS	R. Ewing	X
QUANTITIES	X	X

PREPARED FOR THE STATE OF CALIFORNIA DEPARTMENT OF TRANSPORTATION

Daniel Weddell
PROJECT ENGINEER

BRIDGE No. X
POST MILE X

LAUS VIADUCT OVER US-101
GENERAL SECTIONS NO. 6

STRUCTURES DESIGN DETAIL SHEET (ENGLISH) (REVISION 8/16/2021)

DATE PLOTTED => 2/20/2025 TIME PLOTTED => 6:32:53 PM
FILE => General Sections No_6_B17 USERNAME => ABANESH

ORIGINAL SCALE IN INCHES FOR REDUCED PLANS 0 1 2 3

PROJECT NUMBER & PHASE: 07150001191
COUNTY/ROUTE: LA/101
CONTRACT No.: 07-220001

DISREGARD PRINTS BEARING EARLIER REVISION DATES

REVISION DATES					SHEET	OF
2/21/25					7	171

BENT GEOMETRY TABLE			
SUPPORT	COLUMN SIZE	CIDH PILE SIZE	SUPERSTRUCTURE DEPTH
BENT 19	6'-3"	78"	2'-9"
BENT 20	6'-3"	78"	3'-0"
BENT 21	6'-3"	78"	3'-0"
BENT 22	6'-3"	78"	3'-0"
BENT 23	6'-3"	78"	3'-0"
BENT 24	6'-3"	78"	3'-0"

LEGEND:

TOR Top Of Rail

NOTES:

1. All dimensions normal to "Lt Const" Line, unless noted otherwise. Dimensions shown are measured at each bent location.
2. For column sizes, CIDH concrete pile sizes, and superstructure depths, see "BENT GEOMETRY TABLE".
3. Anchor bolts to be installed for OCS pole foundations and anchorages.

(2) Paint Bent Number
(3) Handrail
(4) Walkway/Duct Bank
(5) OCS Pole, see TRACK PLANS (Future)
(7) HMA
(8) Drainage System
(9) Ballast
(10) Column Isolation Casing

Dist	COUNTY	ROUTE	POST MILES TOTAL PROJECT	SHEET No.	TOTAL SHEETS
07	LA	105, 101	17.0/17.3, 0.4/0.7	X	X

REGISTERED CIVIL ENGINEER — DATE X

PLANS APPROVAL DATE X

REGISTERED PROFESSIONAL ENGINEER — Montserrat Martin — No. C64771 — Exp. 6/30/25 — CIVIL — STATE OF CALIFORNIA

THE STATE OF CALIFORNIA OR ITS OFFICERS OR AGENTS SHALL NOT BE RESPONSIBLE FOR THE ACCURACY OR COMPLETENESS OF SCANNED COPIES OF THIS PLAN SHEET.

HDR, INC
3220 EL CAMINO REAL
SUITE 200
IRVINE, CA 92602

LA METRO
ONE GATEWAY PLAZA
LOS ANGELES, CA 90012

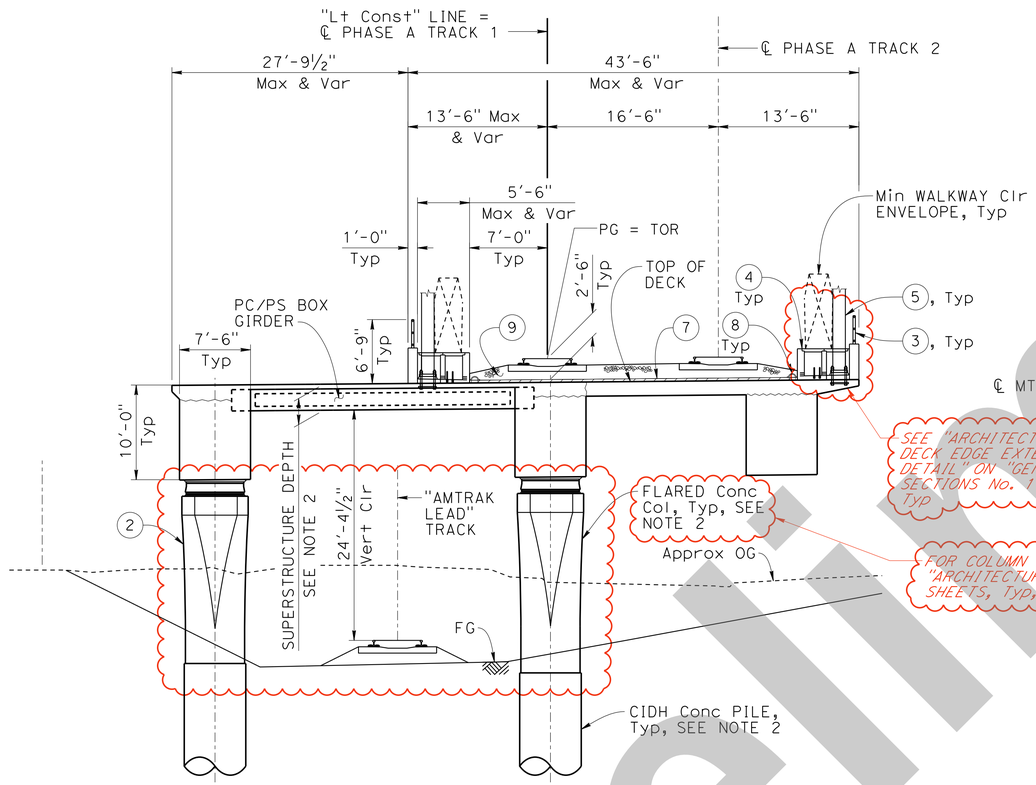

NOTE:
Bent 19 shown, Bents 20, 21 AND 22 similar.

BENT 19

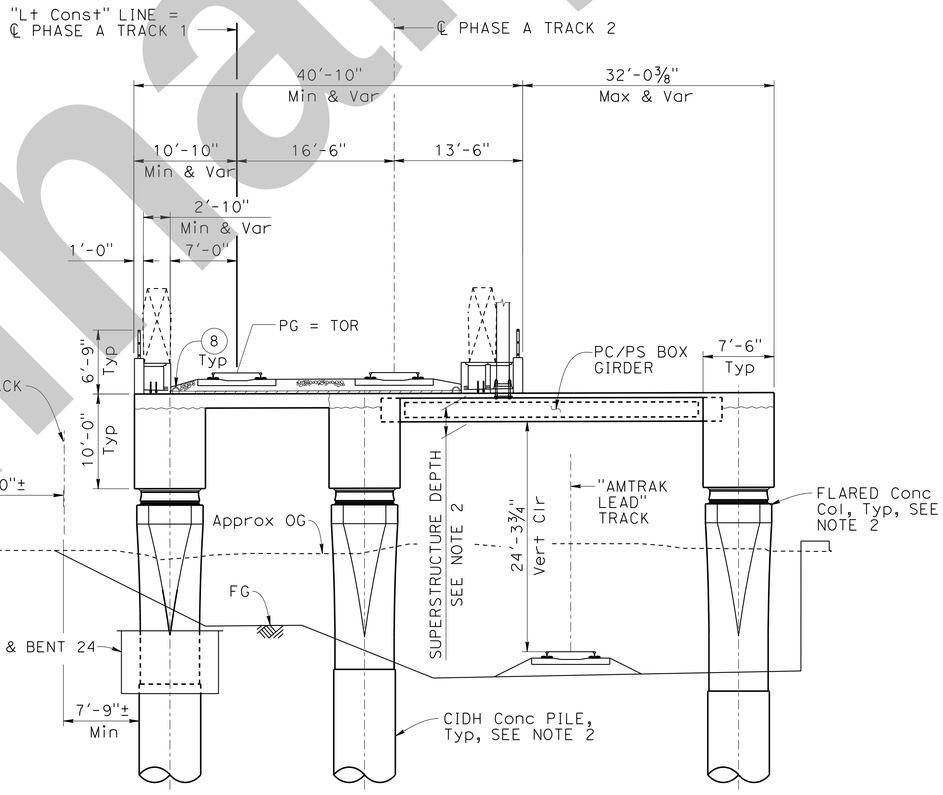

NOTE:
For information not showN, see "BENT 19"
Bent 23 shown, Bent 24 similar.

BENT 23

TYPICAL SECTION

⅛" = 1'-0"

FOR BRIDGE ARCHITECTURAL TREATMENT, SEE "ARCHITECTURAL CONCEPT" SHEETS.

NOTE:
THE CONTRACTOR MUST VERIFY ALL CONTROLLING FIELD DIMENSIONS BEFORE ORDERING OR FABRICATING ANY MATERIAL.

INTERMEDIATE SUBMITTAL - 02/21/25

Preliminary

X
DESIGN OVERSIGHT
X
SIGN OFF DATE

	BY	CHECKED
DESIGN	A. Banesh	X
DETAILS	R. Ewing	X
QUANTITIES	X	X

PREPARED FOR THE STATE OF CALIFORNIA DEPARTMENT OF TRANSPORTATION

Daniel Weddell
PROJECT ENGINEER

BRIDGE No. X
POST MILE X

LAUS VIADUCT OVER US-101
GENERAL SECTIONS NO. 7

STRUCTURES DESIGN DETAIL SHEET (ENGLISH) (REVISION 8/16/2021)

DATE PLOTTED => 2/20/2025 TIME PLOTTED => 6:32:59 PM
FILE => General Sections No_7_B19 USERNAME => ABANESH

ORIGINAL SCALE IN INCHES FOR REDUCED PLANS 0 1 2 3

PROJECT NUMBER & PHASE: 07150001191
COUNTY/ROUTE: LA/101
CONTRACT No.: 07-220001

DISREGARD PRINTS BEARING EARLIER REVISION DATES →

REVISION DATES				SHEET	OF
2/21/25				8	171

Dist	COUNTY	ROUTE	POST MILES TOTAL PROJECT	SHEET No.	TOTAL SHEETS
07	LA	105, 101	17.0/17.3, 0.4/0.7	X	X

X
REGISTERED CIVIL ENGINEER — DATE

X
PLANS APPROVAL DATE

REGISTERED PROFESSIONAL ENGINEER — Montserrat Martin — No. C64771 — Exp. 6/30/25 — CIVIL — STATE OF CALIFORNIA

THE STATE OF CALIFORNIA OR ITS OFFICERS OR AGENTS SHALL NOT BE RESPONSIBLE FOR THE ACCURACY OR COMPLETENESS OF SCANNED COPIES OF THIS PLAN SHEET.

HDR, INC
3220 EL CAMINO REAL
SUITE 200
IRVINE, CA 92602

LA METRO
ONE GATEWAY PLAZA
LOS ANGELES, CA 90012

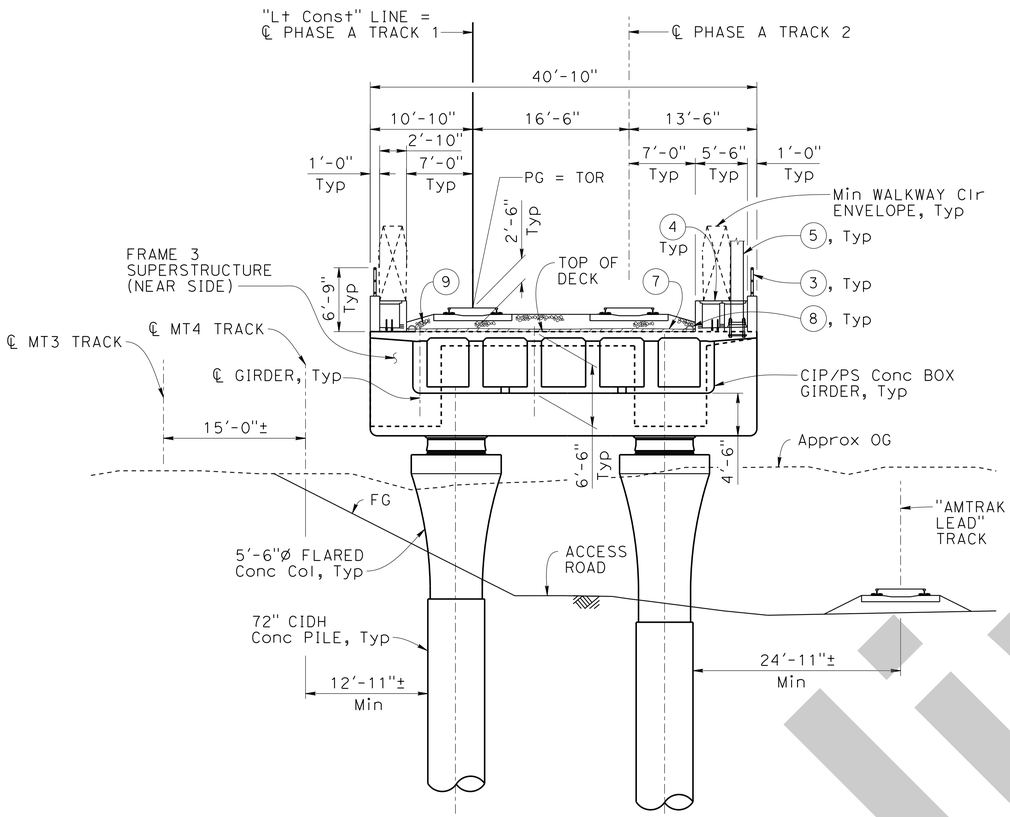

BENT 25 (FAR SIDE)

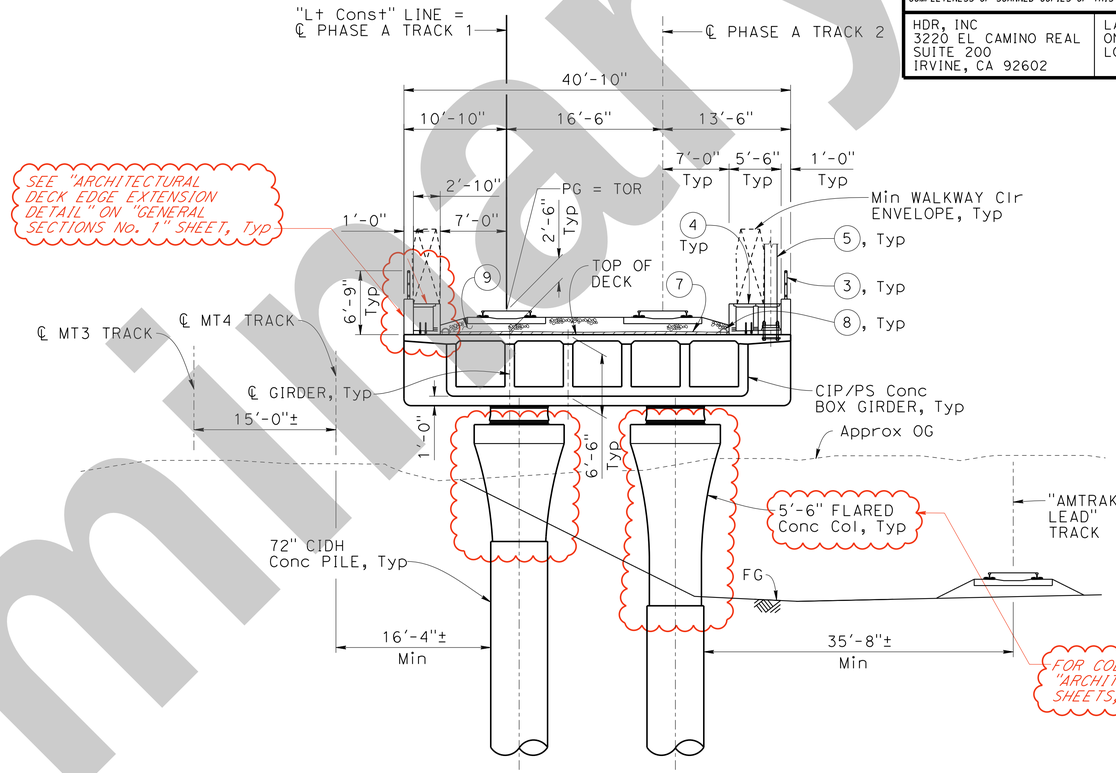

NOTE:
Bent 26 shown, Bents 27 and 28 are similar.

BENT 26

TYPICAL SECTION

1/8" = 1'-0"

LEGEND:

TOR Top Of Rail

NOTES:

1. All dimensions normal to "Lt Const" Line, unless noted otherwise. Dimensions shown are measured at each bent location.
2. Anchor bolts to be installed for OCS pole foundations and anchorages.

(2) Paint Bent Number
(3) Handrail
(4) Walkway/Duct Bank
(5) OCS Pole, see TRACK PLANS (Future)
(7) HMA
(8) Drainage System
(9) Ballast

FOR BRIDGE ARCHITECTURAL TREATMENT, SEE "ARCHITECTURAL CONCEPT" SHEETS.

NOTE:
THE CONTRACTOR MUST VERIFY ALL CONTROLLING FIELD DIMENSIONS BEFORE ORDERING OR FABRICATING ANY MATERIAL.

INTERMEDIATE SUBMITTAL - 02/21/25

Preliminary

X
DESIGN OVERSIGHT

X
SIGN OFF DATE

	BY	CHECKED
DESIGN	A. Banesh	X
DETAILS	R. Ewing	X
QUANTITIES	X	X

PREPARED FOR THE STATE OF CALIFORNIA DEPARTMENT OF TRANSPORTATION

Daniel Weddell
PROJECT ENGINEER

BRIDGE No. X
POST MILE X

LAUS VIADUCT OVER US-101
GENERAL SECTIONS NO. 8

STRUCTURES DESIGN DETAIL SHEET (ENGLISH) (REVISION 8/16/2021)

DATE PLOTTED => 2/20/2025 TIME PLOTTED => 6:33:05 PM
FILE => General Sections No_8_B25 USERNAME => ABANESH

ORIGINAL SCALE IN INCHES FOR REDUCED PLANS 0 1 2 3

PROJECT NUMBER & PHASE: 07150001191
COUNTY/ROUTE: LA/101
CONTRACT No.: 07-220001

DISREGARD PRINTS BEARING EARLIER REVISION DATES →

REVISION DATES	SHEET	OF
2/21/25	9	171

Dist	COUNTY	ROUTE	POST MILES TOTAL PROJECT	SHEET No.	TOTAL SHEETS
07	LA	105, 101	17.0/17.3, 0.4/0.7	X	X

REGISTERED CIVIL ENGINEER — X — DATE

PLANS APPROVAL DATE — X

REGISTERED PROFESSIONAL ENGINEER — Montserrat Martin — No. C64771 — Exp. 6/30/25 — CIVIL — STATE OF CALIFORNIA

THE STATE OF CALIFORNIA OR ITS OFFICERS OR AGENTS SHALL NOT BE RESPONSIBLE FOR THE ACCURACY OR COMPLETENESS OF SCANNED COPIES OF THIS PLAN SHEET.

HDR, INC
3220 EL CAMINO REAL
SUITE 200
IRVINE, CA 92602

LA METRO
ONE GATEWAY PLAZA
LOS ANGELES, CA 90012

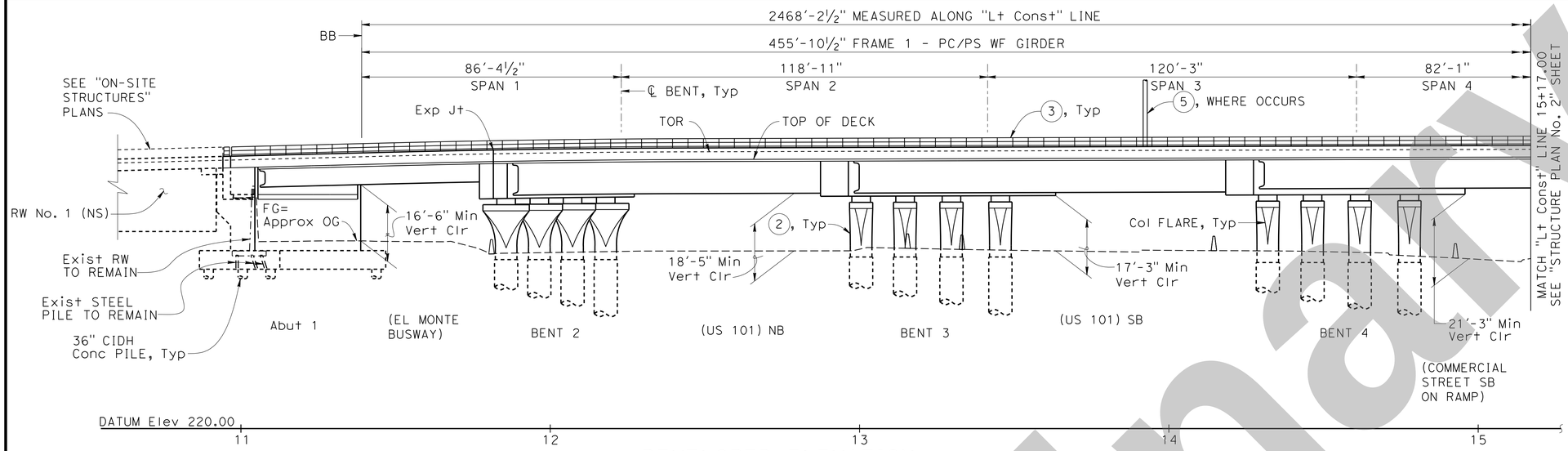

DEVELOPED ELEVATION

1" = 20'

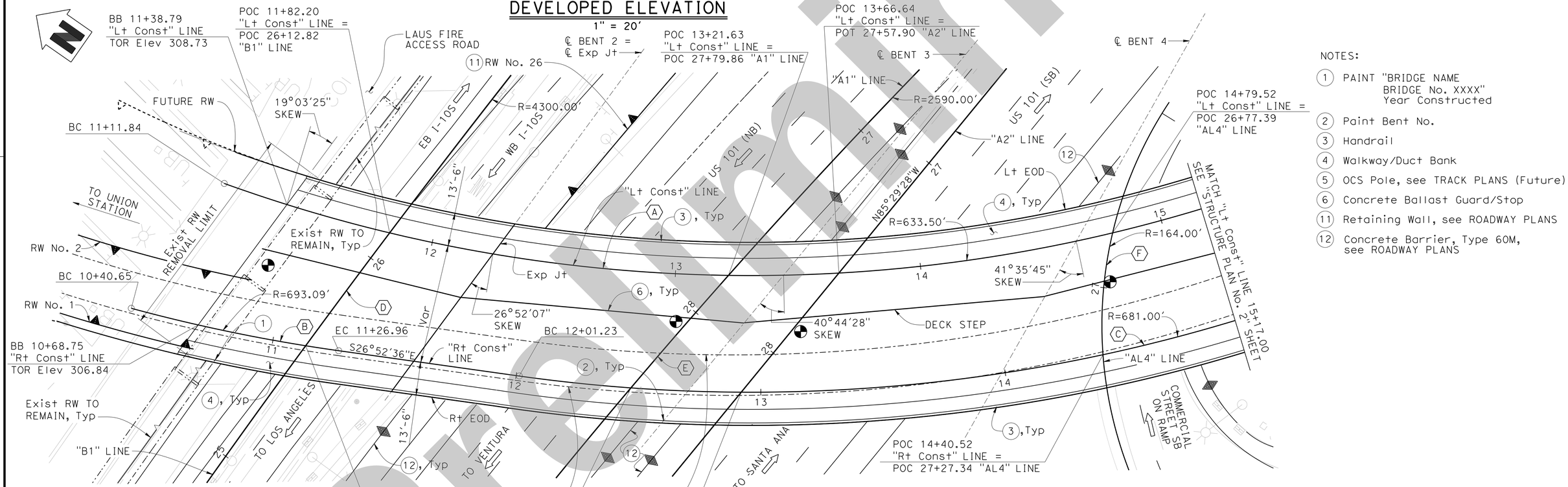

PLAN

1" = 20'

LEGEND:

⊕	Point of minimum vertical clearance
TOR	Top of Rail
——	Expansion Joint
WF	Wide Flange

NOTES:

1. PAINT "BRIDGE NAME BRIDGE No. XXXX" Year Constructed
2. Paint Bent No.
3. Handrail
4. Walkway/Duct Bank
5. OCS Pole, see TRACK PLANS (Future)
6. Concrete Ballast Guard/Stop
11. Retaining Wall, see ROADWAY PLANS
12. Concrete Barrier, Type 60M, see ROADWAY PLANS

CURVE DATA

(A) "Lt Const" LINE	(B) "Rt Const" LINE	(C) "Rt Const" LINE	(D) "B1" LINE	(E) "A1" LINE	(F) "AL4" LINE
R = 633.50'	R = 693.09'	R = 681.00'	R = 4300.00'	R = 2590.00'	R = 164.00'
Δ = 50°13'38"	Δ = 07°08'06"	Δ = 34°46'54"	Δ = 13°28'42"	Δ = 10°43'19"	Δ = 81°09'21"
T = 296.94'	T = 43.21'	T = 213.29'	T = 508.11'	T = 243.04'	T = 140.46'
L = 555.34'	L = 86.31'	L = 413.40'	L = 1011.54'	L = 484.67'	L = 232.30'

NOTE:
THE CONTRACTOR MUST VERIFY ALL CONTROLLING FIELD DIMENSIONS BEFORE ORDERING OR FABRICATING ANY MATERIAL.

INTERMEDIATE SUBMITTAL - 02/21/25

X
DESIGN OVERSIGHT
X
SIGN OFF DATE

	BY	CHECKED
DESIGN	A. Banesh	X
DETAILS	R. Ewing	X
QUANTITIES	X	X

PREPARED FOR THE STATE OF CALIFORNIA DEPARTMENT OF TRANSPORTATION

Daniel Weddell
PROJECT ENGINEER

BRIDGE No. X
POST MILE X

LAUS VIADUCT OVER US-101

STRUCTURE PLAN NO. 1

STRUCTURES DESIGN DETAIL SHEET (ENGLISH) (REVISION 8/16/2021)

DATE PLOTTED => 2/20/2025
FILE => Structure Plan No_1
TIME PLOTTED => 6:33:39 PM
USERNAME => ABANESH

ORIGINAL SCALE IN INCHES FOR REDUCED PLANS 0 1 2 3

PROJECT NUMBER & PHASE: 07150001191
COUNTY/ROUTE: LA/101
CONTRACT No.: 07-220001

DISREGARD PRINTS BEARING EARLIER REVISION DATES →

REVISION DATES	SHEET	OF
2/21/25	13	171

Preliminary

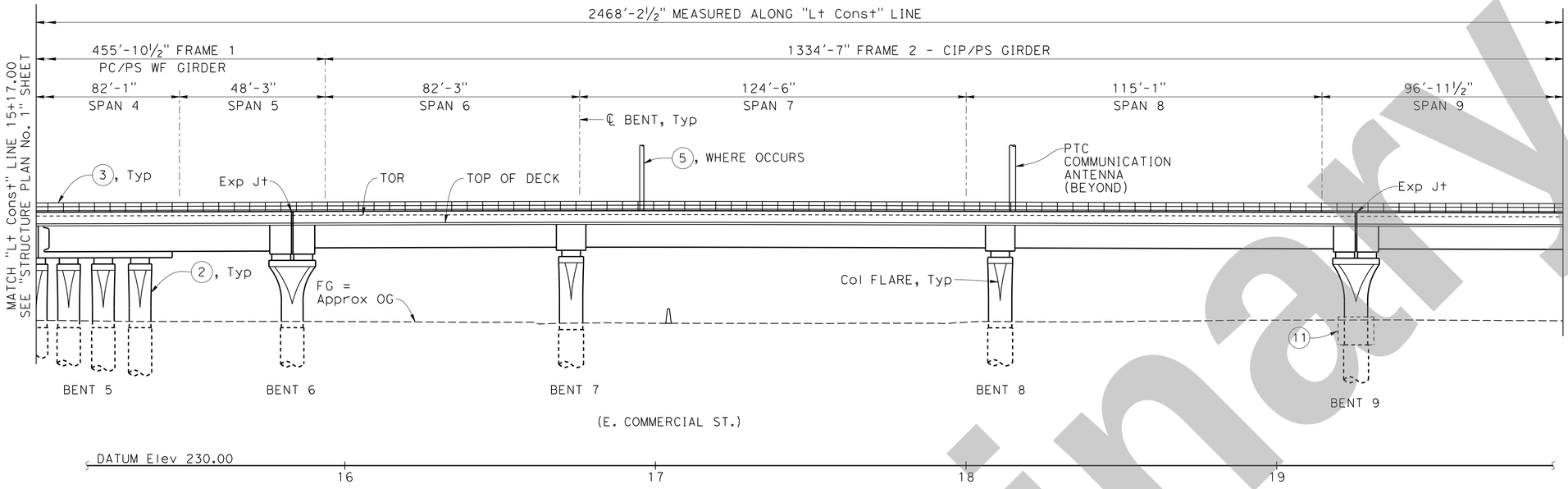

DEVELOPED ELEVATION

1" = 20'

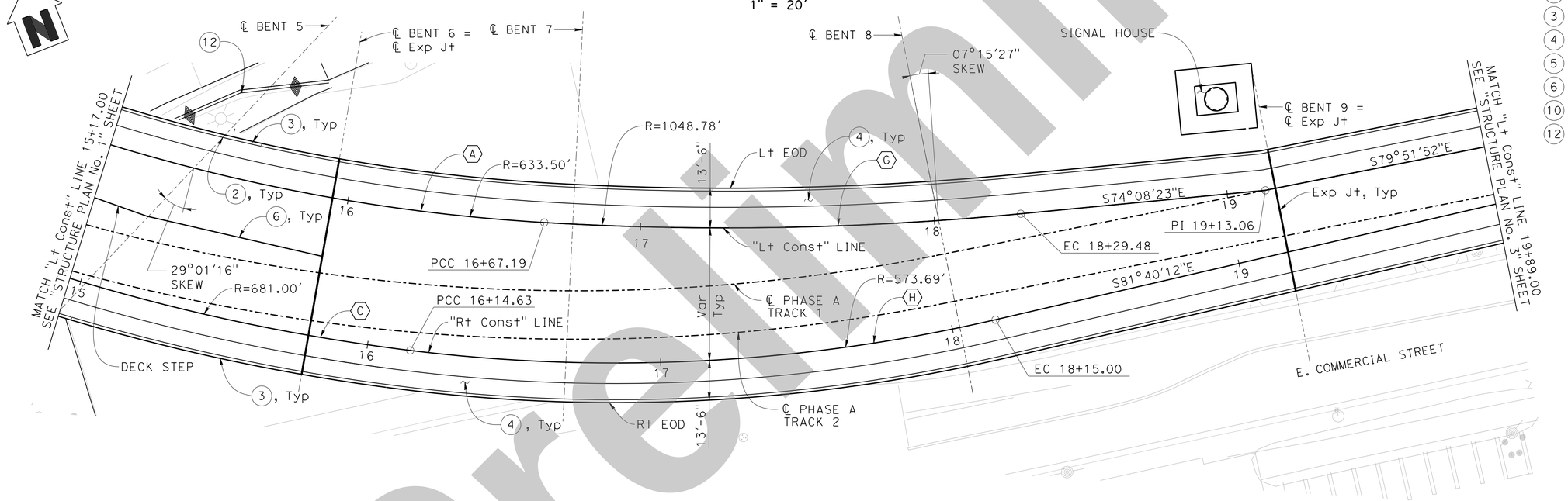

PLAN

1" = 20'

NOTE:
THE CONTRACTOR MUST VERIFY ALL CONTROLLING FIELD DIMENSIONS BEFORE ORDERING OR FABRICATING ANY MATERIAL.

CURVE DATA

Ⓐ "Lt Const" LINE	Ⓒ "Rt Const" LINE	Ⓖ "Lt Const" LINE	Ⓗ "Rt Const" LINE
R = 633.50′	R = 681.00′	R = 1048.78′	R = 573.69′
Δ = 50°13′38"	Δ = 34°46′54"	Δ = 08°52′01"	Δ = 20°00′42"
T = 296.94′	T = 213.29′	T = 81.31′	T = 101.22′
L = 555.34′	L = 413.40′	L = 162.31′	L = 200.37′

Dist	COUNTY	ROUTE	POST MILES TOTAL PROJECT	SHEET No.	TOTAL SHEETS
07	LA	105, 101	17.0/17.3, 0.4/0.7	X	X

X
REGISTERED CIVIL ENGINEER — DATE

X
PLANS APPROVAL DATE

Montserrat Martin
No. C64771
Exp. 6/30/25
CIVIL
REGISTERED PROFESSIONAL ENGINEER
STATE OF CALIFORNIA

THE STATE OF CALIFORNIA OR ITS OFFICERS OR AGENTS SHALL NOT BE RESPONSIBLE FOR THE ACCURACY OR COMPLETENESS OF SCANNED COPIES OF THIS PLAN SHEET.

HDR, INC
3220 EL CAMINO REAL
SUITE 200
IRVINE, CA 92602

LA METRO
ONE GATEWAY PLAZA
LOS ANGELES, CA 90012

LEGEND:

◒	Point of minimum vertical clearance
TOR	Top of Rail
——	Expansion Joint
WF	Wide Flange

NOTES:

(2) Paint Bent No.
(3) Handrail
(4) Walkway/Duct Bank
(5) OCS Pole, see TRACK PLANS (Future)
(6) Concrete Ballast Guard/Stop
(10) Column Isolation Casing
(12) Concrete Barrier, Type 60M, see ROADWAY PLANS

INTERMEDIATE SUBMITTAL - 02/21/25

DESIGN	BY A. Banesh	CHECKED X	PREPARED FOR THE STATE OF CALIFORNIA DEPARTMENT OF TRANSPORTATION	Daniel Weddell, PROJECT ENGINEER
DETAILS	BY R. Ewing	CHECKED X		BRIDGE No. X
QUANTITIES	BY X	CHECKED X		POST MILE X

X
DESIGN OVERSIGHT

X
SIGN OFF DATE

LAUS VIADUCT OVER US-101
STRUCTURE PLAN NO. 2

STRUCTURES DESIGN DETAIL SHEET (ENGLISH) (REVISION 8/16/2021)

DATE PLOTTED => 2/20/2025 TIME PLOTTED => 6:33:49 PM
FILE => Structure Plan No_2 USERNAME => ABANESH

ORIGINAL SCALE IN INCHES FOR REDUCED PLANS 0 1 2 3

PROJECT NUMBER & PHASE: 07150001191
COUNTY/ROUTE: LA/101
CONTRACT No.: 07-220001

DISREGARD PRINTS BEARING EARLIER REVISION DATES →

REVISION DATES				SHEET	OF
2/21/25				14	171

SHEET NO 42

Preliminary

Dist	COUNTY	ROUTE	POST MILES TOTAL PROJECT	SHEET No.	TOTAL SHEETS
07	LA	105, 101	17.0/17.3, 0.4/0.7	X	X

X
REGISTERED CIVIL ENGINEER — DATE

X
PLANS APPROVAL DATE

REGISTERED PROFESSIONAL ENGINEER — Montserrat Martin — No. C64771 — Exp. 6/30/25 — CIVIL — STATE OF CALIFORNIA

THE STATE OF CALIFORNIA OR ITS OFFICERS OR AGENTS SHALL NOT BE RESPONSIBLE FOR THE ACCURACY OR COMPLETENESS OF SCANNED COPIES OF THIS PLAN SHEET.

HDR, INC
3220 EL CAMINO REAL
SUITE 200
IRVINE, CA 92602

LA METRO
ONE GATEWAY PLAZA
LOS ANGELES, CA 90012

Preliminary

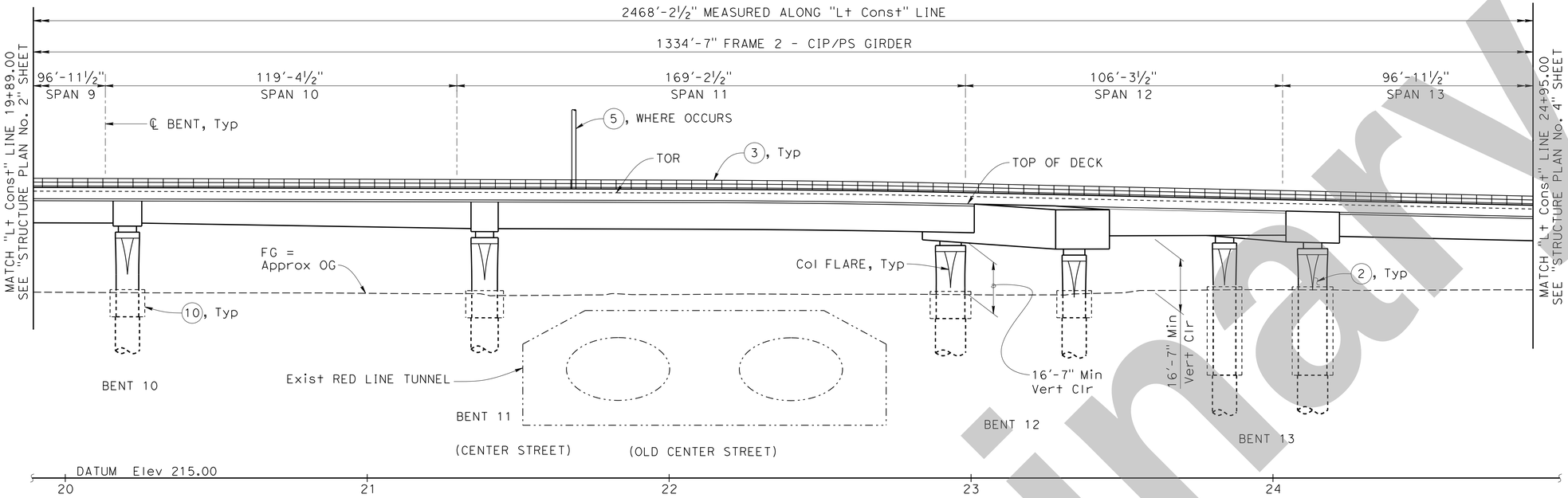

DEVELOPED ELEVATION
1" = 20'

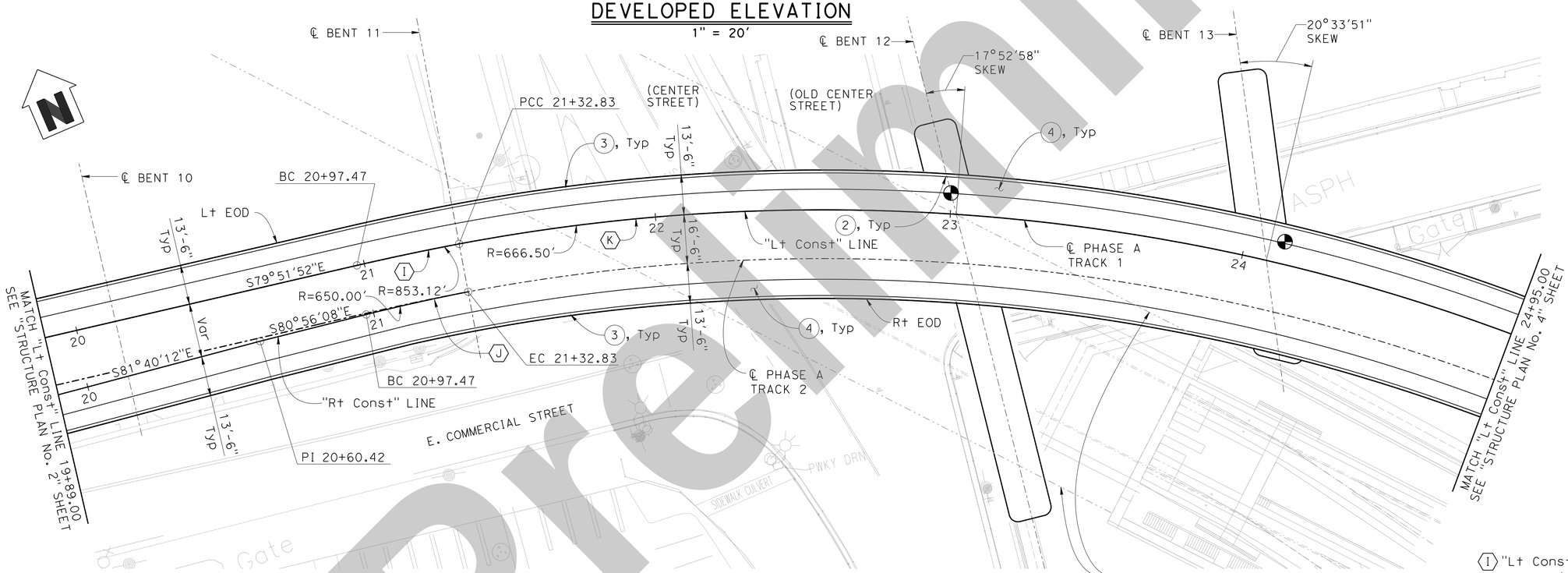

PLAN
1" = 20'

LEGEND:

Point of minimum vertical clearance

TOR Top of Rail

NOTES:

(2) Paint Bent No.
(3) Handrail
(4) Walkway/Duct Bank
(5) OCS Pole, see TRACK PLANS (Future)
(10) Column Isolation Casing

CURVE DATA

(I) "Lt Const" LINE	(J) "Rt Const" LINE	(K) "Lt Const" LINE
R = 853.12'	R = 650.00'	R = 666.50'
Δ = 02°22'28"	Δ = 03°07'00"	Δ = 88°12'03"
T = 17.68'	T = 17.68'	T = 645.89'
L = 35.36'	L = 35.36'	L = 1026.01'

NOTE:
THE CONTRACTOR MUST VERIFY ALL CONTROLLING FIELD DIMENSIONS BEFORE ORDERING OR FABRICATING ANY MATERIAL.

INTERMEDIATE SUBMITTAL - 02/21/25

X
DESIGN OVERSIGHT

X
SIGN OFF DATE

	BY	CHECKED
DESIGN	A. Banesh	X
DETAILS	R. Ewing	X
QUANTITIES	X	X

PREPARED FOR THE STATE OF CALIFORNIA DEPARTMENT OF TRANSPORTATION

Daniel Weddell
PROJECT ENGINEER

BRIDGE No. X
POST MILE X

LAUS VIADUCT OVER US-101
STRUCTURE PLAN NO. 3

STRUCTURES DESIGN DETAIL SHEET (ENGLISH) (REVISION 8/16/2021)

DATE PLOTTED => 2/20/2025 TIME PLOTTED => 6:33:57 PM
FILE => Structure Plan No_3 USERNAME => ABANESH

ORIGINAL SCALE IN INCHES FOR REDUCED PLANS 0 1 2 3

PROJECT NUMBER & PHASE: 07150001191
COUNTY/ROUTE: LA/101
CONTRACT No.: 07-220001

DISREGARD PRINTS BEARING EARLIER REVISION DATES →

REVISION DATES	SHEET	OF
2/21/25	15	171

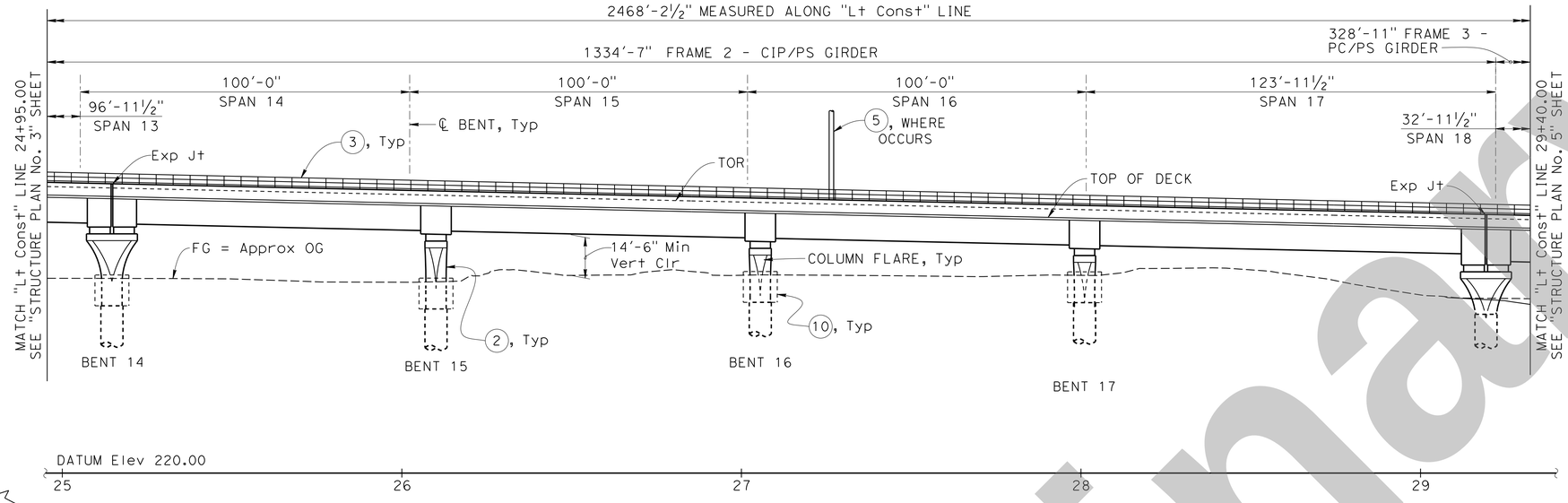

DEVELOPED ELEVATION
1" = 20'

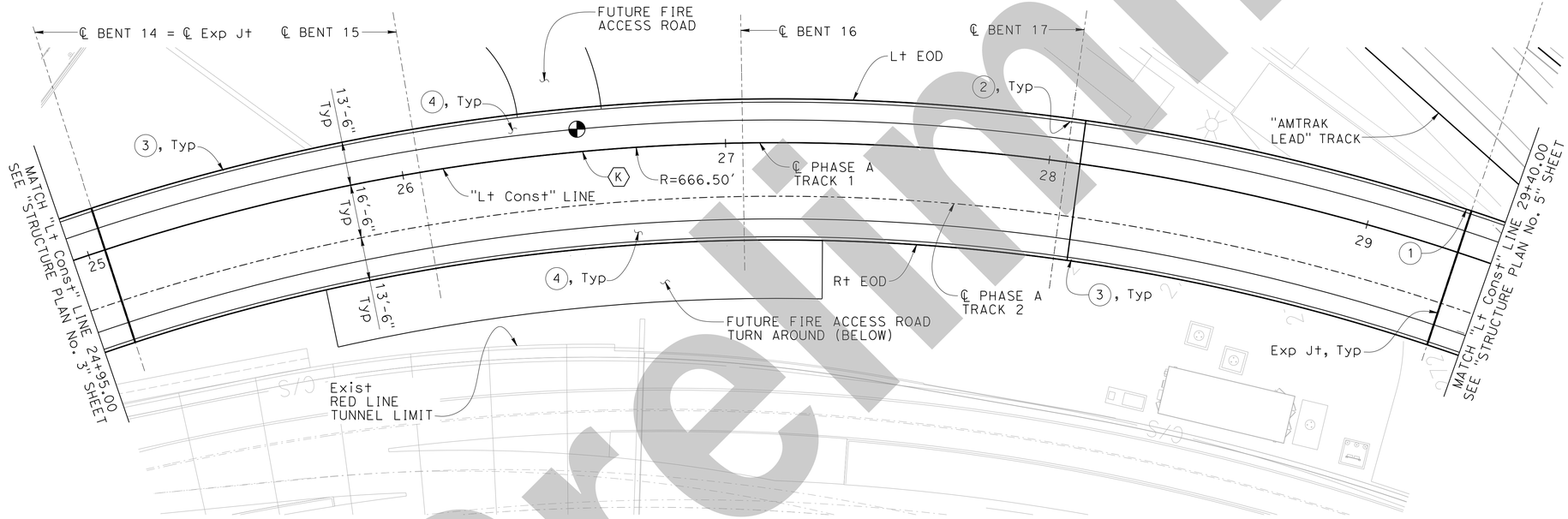

PLAN
1" = 20'

NOTE:
THE CONTRACTOR MUST VERIFY ALL CONTROLLING FIELD DIMENSIONS BEFORE ORDERING OR FABRICATING ANY MATERIAL.

Dist	COUNTY	ROUTE	POST MILES TOTAL PROJECT	SHEET No.	TOTAL SHEETS
07	LA	105, 101	17.0/17.3, 0.4/0.7	X	X

X
REGISTERED CIVIL ENGINEER — DATE

X
PLANS APPROVAL DATE

REGISTERED PROFESSIONAL ENGINEER — Montserrat Martin — No. C64771 — Exp. 6/30/25 — CIVIL — STATE OF CALIFORNIA

THE STATE OF CALIFORNIA OR ITS OFFICERS OR AGENTS SHALL NOT BE RESPONSIBLE FOR THE ACCURACY OR COMPLETENESS OF SCANNED COPIES OF THIS PLAN SHEET.

HDR, INC
3220 EL CAMINO REAL
SUITE 200
IRVINE, CA 92602

LA METRO
ONE GATEWAY PLAZA
LOS ANGELES, CA 90012

LEGEND:

◓	Point of minimum vertical clearance
TOR	Top of Rail
——	Expansion Joint

NOTES:

(2) Paint Bent No.
(3) Handrail
(4) Walkway/Duct Bank
(5) OCS Pole, see TRACK PLANS (Future)
(10) Column Isolation Casing

CURVE DATA

(K) "Lt Const" LINE
R = 666.50'
Δ = 88°12'03"
T = 645.89'
L = 1026.01'

INTERMEDIATE SUBMITTAL - 02/21/25

DESIGN	BY A. Banesh	CHECKED X	PREPARED FOR THE STATE OF CALIFORNIA DEPARTMENT OF TRANSPORTATION
DETAILS	BY R. Ewing	CHECKED X	
QUANTITIES	BY X	CHECKED X	

X
DESIGN OVERSIGHT
X
SIGN OFF DATE

Daniel Weddell
PROJECT ENGINEER

BRIDGE No. X
POST MILE X

LAUS VIADUCT OVER US-101
STRUCTURE PLAN NO. 4

STRUCTURES DESIGN DETAIL SHEET (ENGLISH) (REVISION 8/16/2021)
DATE PLOTTED => 2/20/2025 TIME PLOTTED => 6:34:09 PM
FILE => Structure Plan No_4 USERNAME => ABANESH
ORIGINAL SCALE IN INCHES FOR REDUCED PLANS 0 1 2 3
PROJECT NUMBER & PHASE: 07150001191
COUNTY/ROUTE: LA/101
CONTRACT No.: 07-220001
DISREGARD PRINTS BEARING EARLIER REVISION DATES →

REVISION DATES	SHEET	OF
2/21/25	16	171

SHEET NO 44

Preliminary

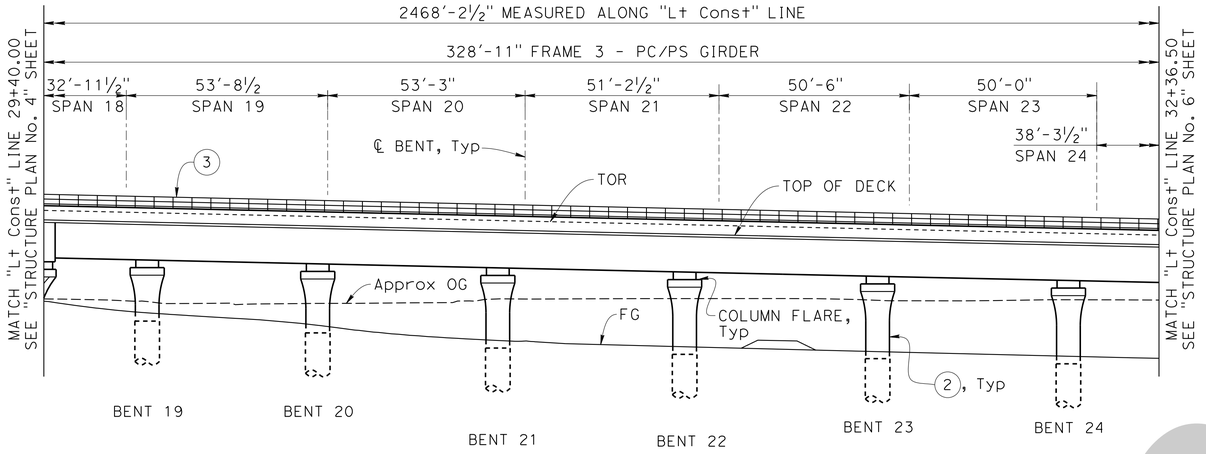

DEVELOPED ELEVATION
1" = 20'

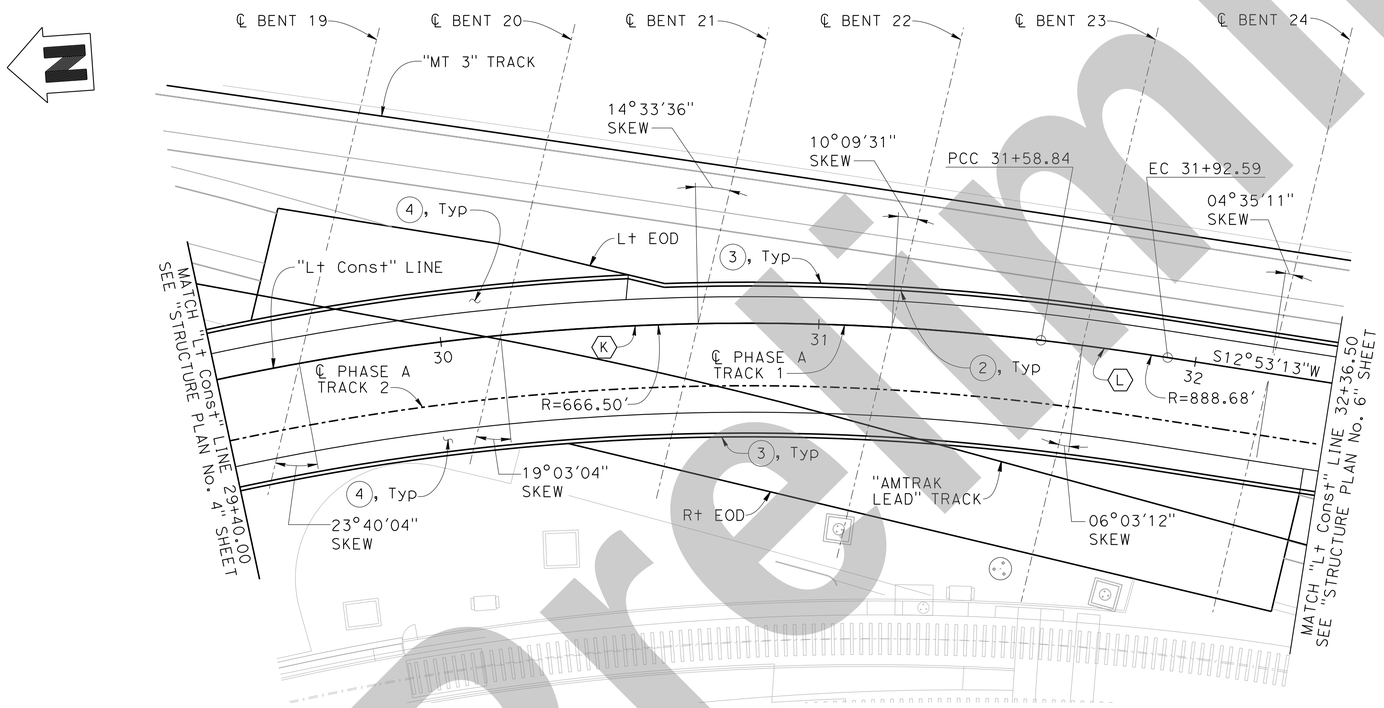

PLAN
1" = 20'

NOTE:
THE CONTRACTOR MUST VERIFY ALL CONTROLLING FIELD DIMENSIONS BEFORE ORDERING OR FABRICATING ANY MATERIAL.

Dist	COUNTY	ROUTE	POST MILES TOTAL PROJECT	SHEET No.	TOTAL SHEETS
07	LA	105, 101	17.0/17.3, 0.4/0.7	X	X

X
REGISTERED CIVIL ENGINEER — DATE

X
PLANS APPROVAL DATE

REGISTERED PROFESSIONAL ENGINEER — Montserrat Martin — No. C64771 — Exp. 6/30/25 — CIVIL — STATE OF CALIFORNIA

THE STATE OF CALIFORNIA OR ITS OFFICERS OR AGENTS SHALL NOT BE RESPONSIBLE FOR THE ACCURACY OR COMPLETENESS OF SCANNED COPIES OF THIS PLAN SHEET.

HDR, INC
3220 EL CAMINO REAL
SUITE 200
IRVINE, CA 92602

LA METRO
ONE GATEWAY PLAZA
LOS ANGELES, CA 90012

LEGEND:

◓	Point of minimum vertical clearance
TOR	Top of Rail

NOTES:

(2) Paint Bent No.
(3) Handrail
(4) Walkway/Duct Bank
(5) OCS Pole, see TRACK PLANS (Future)

CURVE DATA

(K) "Lt Const" LINE	(L) "Lt Const" LINE
R = 666.50′	R = 888.68′
Δ = 88°12′03"	Δ = 02°10′34"
T = 645.89′	T = 16.88′
L = 1026.01′	L = 33.75′

INTERMEDIATE SUBMITTAL - 02/21/25

Preliminary

X DESIGN OVERSIGHT	DESIGN	BY A. Banesh	CHECKED X
X SIGN OFF DATE	DETAILS	BY R. Ewing	CHECKED X
	QUANTITIES	BY X	CHECKED X

PREPARED FOR THE STATE OF CALIFORNIA DEPARTMENT OF TRANSPORTATION

Daniel Weddell
PROJECT ENGINEER

BRIDGE No. X
POST MILE X

LAUS VIADUCT OVER US-101
STRUCTURE PLAN NO. 5

STRUCTURES DESIGN DETAIL SHEET (ENGLISH) (REVISION 8/16/2021)

DATE PLOTTED => 2/20/2025 TIME PLOTTED => 6:34:18 PM
FILE => Structure Plan No_5 USERNAME => ABANESH

ORIGINAL SCALE IN INCHES FOR REDUCED PLANS 0 1 2 3

PROJECT NUMBER & PHASE: 07150001191
COUNTY/ROUTE: LA/101
CONTRACT No.: 07-220001

DISREGARD PRINTS BEARING EARLIER REVISION DATES →

REVISION DATES	SHEET	OF
2/21/25	17	171

Dist	COUNTY	ROUTE	POST MILES TOTAL PROJECT	SHEET No.	TOTAL SHEETS
07	LA	105, 101	17.0/17.3, 0.4/0.7	X	X

X
REGISTERED CIVIL ENGINEER — DATE

X
PLANS APPROVAL DATE

REGISTERED PROFESSIONAL ENGINEER — Montserrat Martin — No. C64771 — Exp. 6/30/25 — CIVIL — STATE OF CALIFORNIA

THE STATE OF CALIFORNIA OR ITS OFFICERS OR AGENTS SHALL NOT BE RESPONSIBLE FOR THE ACCURACY OR COMPLETENESS OF SCANNED COPIES OF THIS PLAN SHEET.

HDR, INC
3220 EL CAMINO REAL
SUITE 200
IRVINE, CA 92602

LA METRO
ONE GATEWAY PLAZA
LOS ANGELES, CA 90012

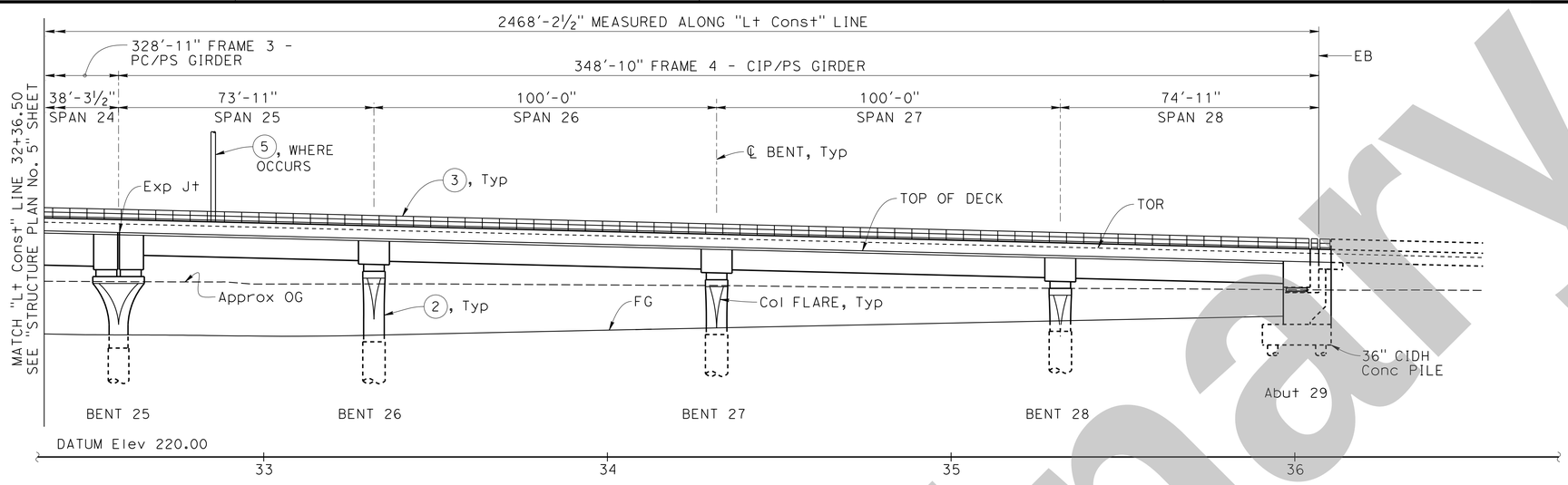

DEVELOPED ELEVATION
1" = 20'

LEGEND:

TOR Top of Rail

——— Expansion Joint

NOTES:

1. PAINT "BRIDGE NAME BRIDGE No. XXXX" Year Constructed
2. Paint Bent No.
3. Handrail
4. Walkway/Duct Bank
5. OCS Pole, see TRACK PLANS (Future)

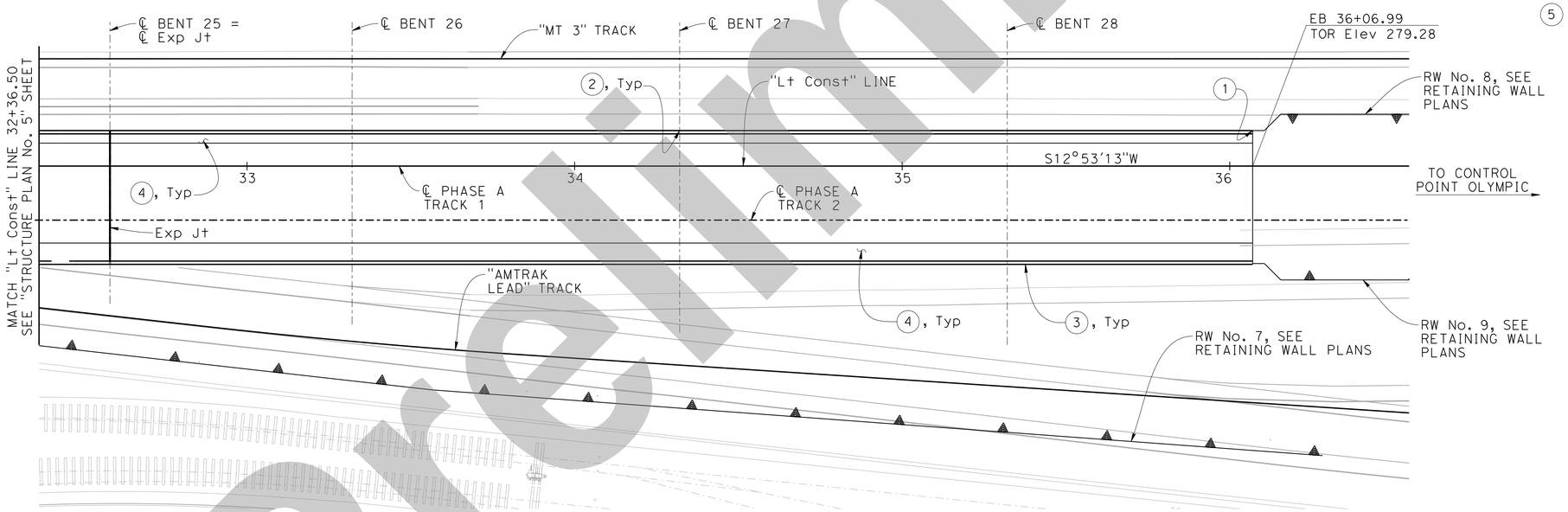

PLAN
1" = 20'

NOTE:
THE CONTRACTOR MUST VERIFY ALL CONTROLLING FIELD DIMENSIONS BEFORE ORDERING OR FABRICATING ANY MATERIAL.

INTERMEDIATE SUBMITTAL - 02/21/25

Preliminary

X
DESIGN OVERSIGHT

X
SIGN OFF DATE

	BY	CHECKED
DESIGN	A. Banesh	X
DETAILS	R. Ewing	X
QUANTITIES	X	X

PREPARED FOR THE STATE OF CALIFORNIA DEPARTMENT OF TRANSPORTATION

Daniel Weddell
PROJECT ENGINEER

BRIDGE No.	X
POST MILE	X

LAUS VIADUCT OVER US-101
STRUCTURE PLAN NO. 6

STRUCTURES DESIGN DETAIL SHEET (ENGLISH) (REVISION 8/16/2021)

DATE PLOTTED => 2/20/2025 TIME PLOTTED => 6:34:28 PM
FILE => Structure Plan No_6 USERNAME => ABANESH

ORIGINAL SCALE IN INCHES FOR REDUCED PLANS 0 1 2 3

PROJECT NUMBER & PHASE: 07150001191
COUNTY/ROUTE: LA/101
CONTRACT No.: 07-220001

DISREGARD PRINTS BEARING EARLIER REVISION DATES →

REVISION DATES				SHEET	OF
2/21/25				18	171

EXISTING UTILITIES (SEE NOTE 1):

1. EXISTING WATER
2. EXISTING GAS, ABANDONED
3. EXISTING SEWER, ABANDONED
4. EXISTING ELECTRICAL, ELECTROLIER
5. 36" APC
6. EXISTING STORM DRAIN
7. EXISTING FO, CALTRANS, RELOCATED

LEGEND:

- Existing Structure
- Existing Retaining Wall Removal (Portion)
- CIDH Concrete Pile (At Bents)
- 36" CIDH Concrete Pile (At Abutment)
- XXX.X — Bottom of Footing Elevation
- XXX.X± — Bottom of Existing Footing Elevation
- Existing Driven Steel Piles
- Existing Battered Driven Steel Pile

NOTES:

1. Types and locations of all utilities are provided for information only. The Contractor must verify all existing utilities and notify utility agencies prior to any removal, relocation, or new construction. see "ROADWAY PLANS" for utility details not shown.
2. Existing foundation elevations shown have been adjusted from the as-built datum to the NAVD88 datum by +2.4 feet.
3. For "PILE DATA TABLE", see "FOUNDATION DATA" sheet.
4. Not all piles shown for clarity.
5. For existing retaining wall removal limits and details, see "ABUTMENT DETAILS No. 1" sheet.

Dist	COUNTY	ROUTE	POST MILES TOTAL PROJECT	SHEET No.	TOTAL SHEETS
07	LA	105, 101	17.0/17.3, 0.4/0.7	X	X

X
REGISTERED CIVIL ENGINEER — DATE

X
PLANS APPROVAL DATE

REGISTERED PROFESSIONAL ENGINEER — Montserrat Martin — No. C64771 — Exp. 6/30/25 — CIVIL — STATE OF CALIFORNIA

THE STATE OF CALIFORNIA OR ITS OFFICERS OR AGENTS SHALL NOT BE RESPONSIBLE FOR THE ACCURACY OR COMPLETENESS OF SCANNED COPIES OF THIS PLAN SHEET.

HDR, INC
3220 EL CAMINO REAL
SUITE 200
IRVINE, CA 92602

LA METRO
ONE GATEWAY PLAZA
LOS ANGELES, CA 90012

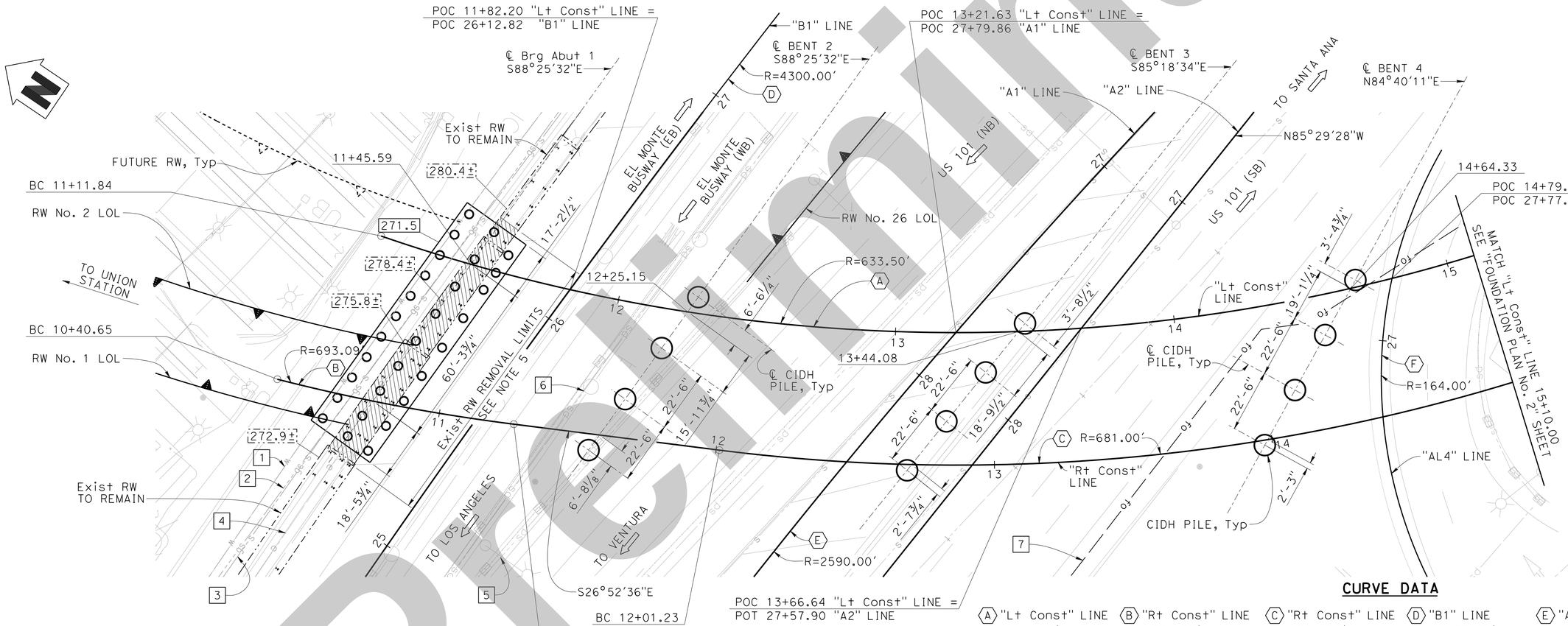

PLAN

CURVE DATA

(A) "Lt Const" LINE	(B) "Rt Const" LINE	(C) "Rt Const" LINE	(D) "B1" LINE	(E) "A1" LINE	(F) "AL4" LINE
R = 633.50′	R = 693.09′	R = 681.00′	R = 4300.00′	R = 2590.00′	R = 164.00′
Δ = 50°13'38"	Δ = 07°08'06"	Δ = 34°46'54"	Δ = 13°28'42"	Δ = 10°43'19"	Δ = 81°09'21"
T = 296.94′	T = 43.21′	T = 213.29′	T = 508.11′	T = 243.04′	T = 140.46′
L = 555.34′	L = 86.31′	L = 413.40′	L = 1011.54′	L = 484.67′	L = 232.30′

NOTE:
THE CONTRACTOR MUST VERIFY ALL CONTROLLING FIELD DIMENSIONS BEFORE ORDERING OR FABRICATING ANY MATERIAL.

INTERMEDIATE SUBMITTAL - 02/21/25

Preliminary

X
DESIGN OVERSIGHT

X
SIGN OFF DATE

SCALE: 1" = 20′ | VERT.DATUM NAVD 88 | HORZ.DATUM NAD 83
PHOTOGRAMMETRY AS OF: X | ALIGNMENT TIES: X
SURVEYED BY X | DRAFTED BY X
FIELD CHECKED BY X | CHECKED BY X

	BY	CHECKED
DESIGN	A. Banesh	X
DETAILS	R. Ewing	X
QUANTITIES	X	X

PREPARED FOR THE STATE OF CALIFORNIA DEPARTMENT OF TRANSPORTATION

Daniel Weddell
PROJECT ENGINEER

BRIDGE No. X
POST MILE X

LAUS VIADUCT OVER US-101
FOUNDATION PLAN NO. 1

STRUCTURES FOUNDATION PLAN SHEET (ENGLISH) (REVISION 8/16/2021)

DATE PLOTTED => 2/20/2025 TIME PLOTTED => 6:35:13 PM
FILE => Foundation Plan No_1 USERNAME => ABANESH
ORIGINAL SCALE IN INCHES FOR REDUCED PLANS 0 1 2 3

PROJECT NUMBER & PHASE: 07150001191
COUNTY/ROUTE: LA/101
CONTRACT No.: 07-220001

DISREGARD PRINTS BEARING EARLIER REVISION DATES →

REVISION DATES				SHEET	OF
2/21/25				23	171

EXISTING UTILITIES (SEE NOTE 1):

7 EXISTING ELECTRICAL BOSL

8 EXISTING TELECOM OH, TWC

9 EXISTING ELECTRICAL BOSL

10 EXISTING TELECOM OH, WILCON FREEDOM

11 EXISTING ELECTRICAL OH, DWP
EXISTING TELECOM OH, TWC

NOTES

1. Types and locations of all utilities are provided for information only. The Contractor must verify all existing utilities and notify utility agencies prior to any removal, relocation, or new construction. see "ROADWAY PLANS" for utility details not shown.

2. For "PILE DATA TABLE", see "FOUNDATION DATA" sheet.

Dist	COUNTY	ROUTE	POST MILES TOTAL PROJECT	SHEET No.	TOTAL SHEETS
07	LA	105, 101	17.0/17.3, 0.4/0.7	X	X

X
REGISTERED CIVIL ENGINEER — DATE

X
PLANS APPROVAL DATE

REGISTERED PROFESSIONAL ENGINEER — Montserrat Martin — No. C64771 — Exp. 6/30/25 — CIVIL — STATE OF CALIFORNIA

THE STATE OF CALIFORNIA OR ITS OFFICERS OR AGENTS SHALL NOT BE RESPONSIBLE FOR THE ACCURACY OR COMPLETENESS OF SCANNED COPIES OF THIS PLAN SHEET.

HDR, INC
3220 EL CAMINO REAL
SUITE 200
IRVINE, CA 92602

LA METRO
ONE GATEWAY PLAZA
LOS ANGELES, CA 90012

LEGEND:

○ CIDH Concrete Pile

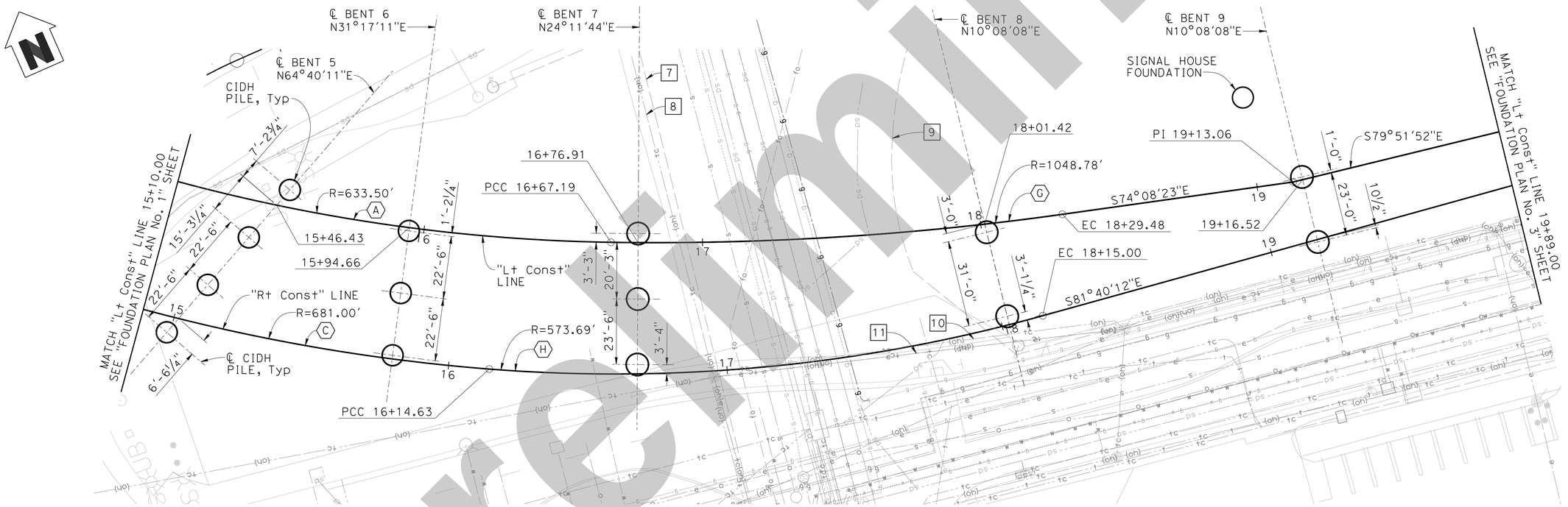

PLAN

CURVE DATA

A "Lt Const" LINE	C "Rt Const" LINE	G "Lt Const" LINE	H "Rt Const" LINE
R = 633.50′	R = 681.00′	R = 1048.78′	R = 573.69′
Δ = 50°13′38"	Δ = 34°46′54"	Δ = 08°52′01"	Δ = 20°00′42"
T = 296.94′	T = 213.29′	T = 81.31′	T = 101.22′
L = 555.34′	L = 413.40′	L = 162.31′	L = 200.37′

NOTE:
THE CONTRACTOR MUST VERIFY ALL CONTROLLING FIELD DIMENSIONS BEFORE ORDERING OR FABRICATING ANY MATERIAL.

INTERMEDIATE SUBMITTAL - 02/21/25

Preliminary

X
DESIGN OVERSIGHT

X
SIGN OFF DATE

SCALE: 1" = 20′ | VERT.DATUM NAVD 88 | HORZ.DATUM NAD 83
PHOTOGRAMMETRY AS OF: X | ALIGNMENT TIES: X
SURVEYED BY X | DRAFTED BY X
FIELD CHECKED BY X | CHECKED BY X

	BY	CHECKED
DESIGN	A. Banesh	X
DETAILS	R. Ewing	X
QUANTITIES	X	X

PREPARED FOR THE STATE OF CALIFORNIA DEPARTMENT OF TRANSPORTATION

Daniel Weddell
PROJECT ENGINEER

BRIDGE No. X
POST MILE X

LAUS VIADUCT OVER US-101
FOUNDATION PLAN NO. 2

STRUCTURES FOUNDATION PLAN SHEET (ENGLISH) (REVISION 8/16/2021)

DATE PLOTTED => 2/20/2025 TIME PLOTTED => 6:35:24 PM
FILE => Foundation Plan No_2 USERNAME => ABANESH

ORIGINAL SCALE IN INCHES FOR REDUCED PLANS 0 1 2 3

PROJECT NUMBER & PHASE: 07150001191
COUNTY/ROUTE: LA/101
CONTRACT No.: 07-220001

DISREGARD PRINTS BEARING EARLIER REVISION DATES →

REVISION DATES				SHEET	OF
2/21/25				24	171

SHEET NO 48

EXISTING UTILITIES (SEE NOTE 1):

12 EXISTING GAS SCG, ABANDONED

13 EXISTING TELECOM OH, WILCON FREEDOM
EXISTING ELECTRICAL OH, DWP
EXISTING TELECOM OH, TWC

14 EXISTING ELECTRICAL BOSL

15 EXISTING ELECTRICAL OH, DWP,
TO BE REMOVED (BY OTHERS)

NOTES

1. Types and locations of all utilities are provided for information only. The Contractor must verify all existing utilities and notify utility agencies prior to any removal, relocation, or new construction. see "ROADWAY PLANS" for utility details not shown.

2. For "PILE DATA TABLE", see "FOUNDATION DATA" sheet.

Dist	COUNTY	ROUTE	POST MILES TOTAL PROJECT	SHEET No.	TOTAL SHEETS
07	LA	105, 101	17.0/17.3, 0.4/0.7	X	X

X
REGISTERED CIVIL ENGINEER — DATE

X
PLANS APPROVAL DATE

REGISTERED PROFESSIONAL ENGINEER — Montserrat Martin — No. C64771 — Exp. 6/30/25 — CIVIL — STATE OF CALIFORNIA

THE STATE OF CALIFORNIA OR ITS OFFICERS OR AGENTS SHALL NOT BE RESPONSIBLE FOR THE ACCURACY OR COMPLETENESS OF SCANNED COPIES OF THIS PLAN SHEET.

HDR, INC
3220 EL CAMINO REAL
SUITE 200
IRVINE, CA 92602

LA METRO
ONE GATEWAY PLAZA
LOS ANGELES, CA 90012

LEGEND:

○ CIDH Concrete Pile

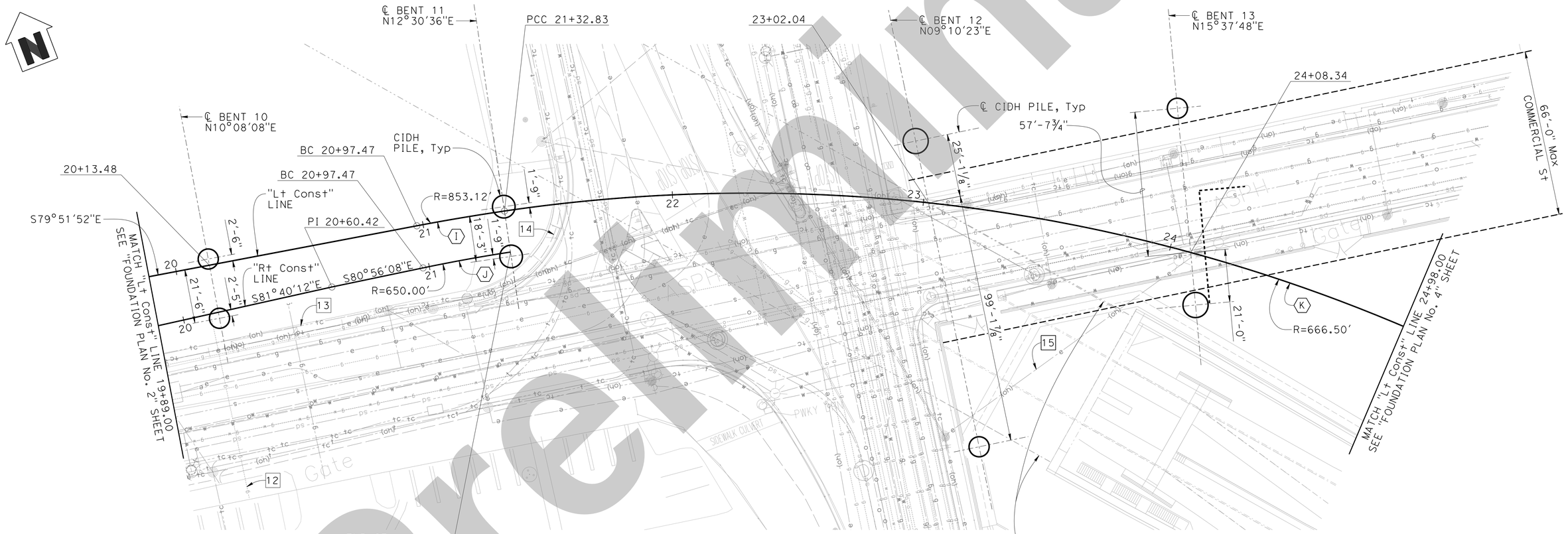

PLAN

CURVE DATA

Ⓘ "Lt Const" LINE	Ⓙ "Rt Const" LINE	Ⓚ "Lt Const" LINE
R = 853.12'	R = 650.00'	R = 666.50'
Δ = 02°22'28"	Δ = 03°07'00"	Δ = 88°12'03"
T = 17.68'	T = 17.68'	T = 645.89'
L = 35.36'	L = 35.36'	L = 1026.01'

NOTE:
THE CONTRACTOR MUST VERIFY ALL CONTROLLING FIELD DIMENSIONS BEFORE ORDERING OR FABRICATING ANY MATERIAL.

INTERMEDIATE SUBMITTAL - 02/21/25

Preliminary

X
DESIGN OVERSIGHT

X
SIGN OFF DATE

STRUCTURES FOUNDATION PLAN SHEET (ENGLISH) (REVISION 8/16/2021)

SCALE: 1" = 20' | VERT.DATUM NAVD 88 | HORZ.DATUM NAD 83
PHOTOGRAMMETRY AS OF: X | ALIGNMENT TIES: X
SURVEYED BY X | DRAFTED BY X
FIELD CHECKED BY X | CHECKED BY X

	BY	CHECKED
DESIGN	A. Banesh	X
DETAILS	R. Ewing	X
QUANTITIES	X	X

PREPARED FOR THE STATE OF CALIFORNIA DEPARTMENT OF TRANSPORTATION

Daniel Weddell
PROJECT ENGINEER

BRIDGE No. X
POST MILE X

LAUS VIADUCT OVER US-101
FOUNDATION PLAN NO. 3

DATE PLOTTED => 2/20/2025 TIME PLOTTED => 6:35:32 PM
FILE => Foundation Plan No_3 USERNAME => ABANESH
ORIGINAL SCALE IN INCHES FOR REDUCED PLANS 0 1 2 3

PROJECT NUMBER & PHASE: 07150001191
COUNTY/ROUTE: LA/101
CONTRACT No.: 07-220001

DISREGARD PRINTS BEARING EARLIER REVISION DATES →

REVISION DATES	SHEET	OF
2/21/25	25	171

EXISTING UTILITIES (SEE NOTE 1):

16 EXISTING GAS, SCG, ABANDONED
17 EXISTING GAS, SCG, ABANDONED
18 EXISTING GAS, SCG, ABANDONED
19 EXISTING GAS, SCG, ABANDONED
20 EXISTING GAS, SCG
21 EXISTING GAS, SCG, ABANDONED
22 EXISTING FO, METRO BLACK
23 EXISTING ELECTRICAL, METRO

NOTES

1. Types and locations of all utilities are provided for information only. The Contractor must verify all existing utilities and notify utility agencies prior to any removal, relocation, or new construction. see "ROADWAY PLANS" for utility details not shown.
2. For "PILE DATA TABLE", see "FOUNDATION DATA" sheet.

Dist	COUNTY	ROUTE	POST MILES TOTAL PROJECT	SHEET No.	TOTAL SHEETS
07	LA	105, 101	17.0/17.3, 0.4/0.7	X	X

X
REGISTERED CIVIL ENGINEER — DATE

X
PLANS APPROVAL DATE

REGISTERED PROFESSIONAL ENGINEER — Montserrat Martin — No. C64771 — Exp. 6/30/25 — CIVIL — STATE OF CALIFORNIA

THE STATE OF CALIFORNIA OR ITS OFFICERS OR AGENTS SHALL NOT BE RESPONSIBLE FOR THE ACCURACY OR COMPLETENESS OF SCANNED COPIES OF THIS PLAN SHEET.

HDR, INC
3220 EL CAMINO REAL
SUITE 200
IRVINE, CA 92602

LA METRO
ONE GATEWAY PLAZA
LOS ANGELES, CA 90012

LEGEND:

○ CIDH Concrete Pile

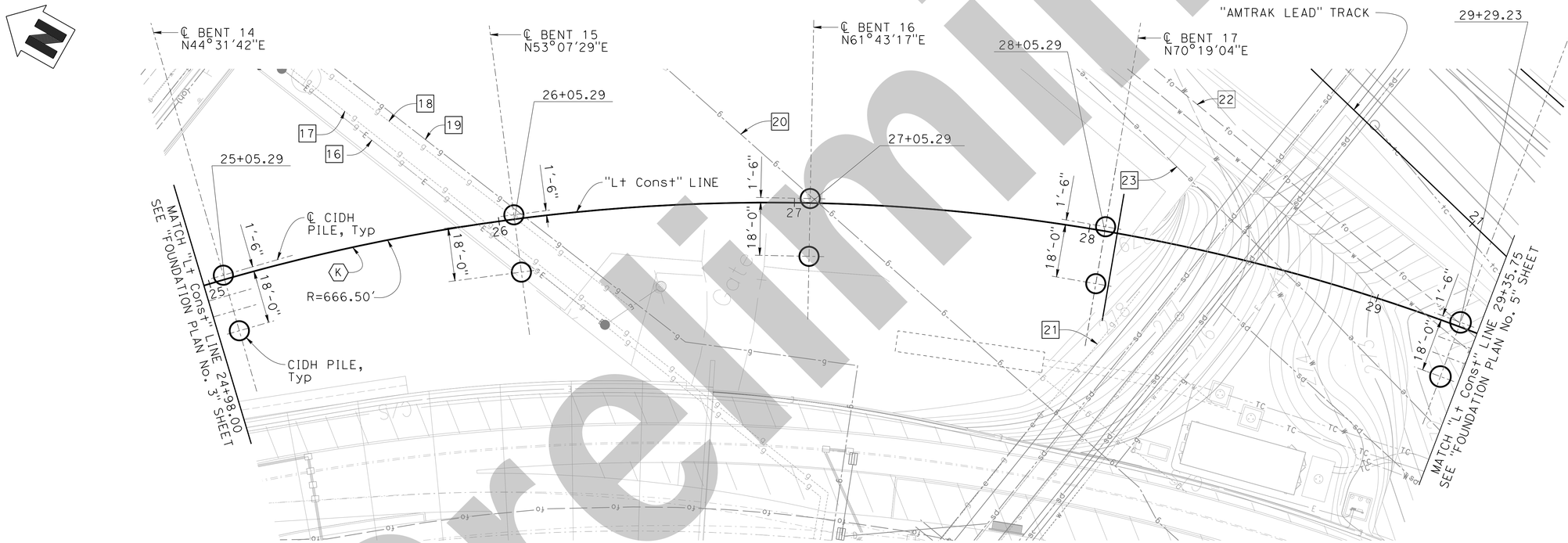

PLAN

CURVE DATA

(K) "Lt Const" LINE
R = 666.50'
Δ = 88°12'03"
T = 645.89'
L = 1026.01'

NOTE:
THE CONTRACTOR MUST VERIFY ALL CONTROLLING FIELD DIMENSIONS BEFORE ORDERING OR FABRICATING ANY MATERIAL.

INTERMEDIATE SUBMITTAL - 02/21/25

Preliminary

X DESIGN OVERSIGHT	SCALE: 1" = 20'	VERT.DATUM NAVD 88	HORZ.DATUM NAD 83	DESIGN	BY A. Banesh	CHECKED X	PREPARED FOR THE STATE OF CALIFORNIA DEPARTMENT OF TRANSPORTATION
X SIGN OFF DATE	PHOTOGRAMMETRY AS OF: X		ALIGNMENT TIES: X	DETAILS	BY R. Ewing	CHECKED X	
	SURVEYED BY X		DRAFTED BY X	QUANTITIES	BY X	CHECKED X	
	FIELD CHECKED BY X		CHECKED BY X				

Daniel Weddell
PROJECT ENGINEER

BRIDGE NO. X
POST MILE X

LAUS VIADUCT OVER US-101
FOUNDATION PLAN NO. 4

STRUCTURES FOUNDATION PLAN SHEET (ENGLISH) (REVISION 8/16/2021)

DATE PLOTTED => 2/20/2025 TIME PLOTTED => 6:35:43 PM
FILE => Foundation Plan No_4 USERNAME => ABANESH

ORIGINAL SCALE IN INCHES FOR REDUCED PLANS 0 1 2 3

PROJECT NUMBER & PHASE: 07150001191
COUNTY/ROUTE: LA/101
CONTRACT No.: 07-220001

DISREGARD PRINTS BEARING EARLIER REVISION DATES →

REVISION DATES				SHEET	OF
2/21/25				26	171

SHEET NO 50

EXISTING UTILITIES (SEE NOTE 1):

24 EXISTING TELECOM, VERIZON

25 EXISTING WATER, PVT

26 EXISTING FIBER OPTIC, METRO BLACK

27 EXISTING TELECOM, VERIZON

NOTES

1. Types and locations of all utilities are provided for information only. The Contractor must verify all existing utilities and notify utility agencies prior to any removal, relocation, or new construction. see "ROADWAY PLANS" for utility details not shown.

2. For "PILE DATA TABLE", see "FOUNDATION DATA" sheet.

Dist	COUNTY	ROUTE	POST MILES TOTAL PROJECT	SHEET No.	TOTAL SHEETS
07	LA	105, 101	17.0/17.3, 0.4/0.7	X	X

X
REGISTERED CIVIL ENGINEER — DATE

X
PLANS APPROVAL DATE

REGISTERED PROFESSIONAL ENGINEER — Montserrat Martin — No. C64771 — Exp. 6/30/25 — CIVIL — STATE OF CALIFORNIA

THE STATE OF CALIFORNIA OR ITS OFFICERS OR AGENTS SHALL NOT BE RESPONSIBLE FOR THE ACCURACY OR COMPLETENESS OF SCANNED COPIES OF THIS PLAN SHEET.

HDR, INC
3220 EL CAMINO REAL
SUITE 200
IRVINE, CA 92602

LA METRO
ONE GATEWAY PLAZA
LOS ANGELES, CA 90012

LEGEND:

○ CIDH Concrete Pile

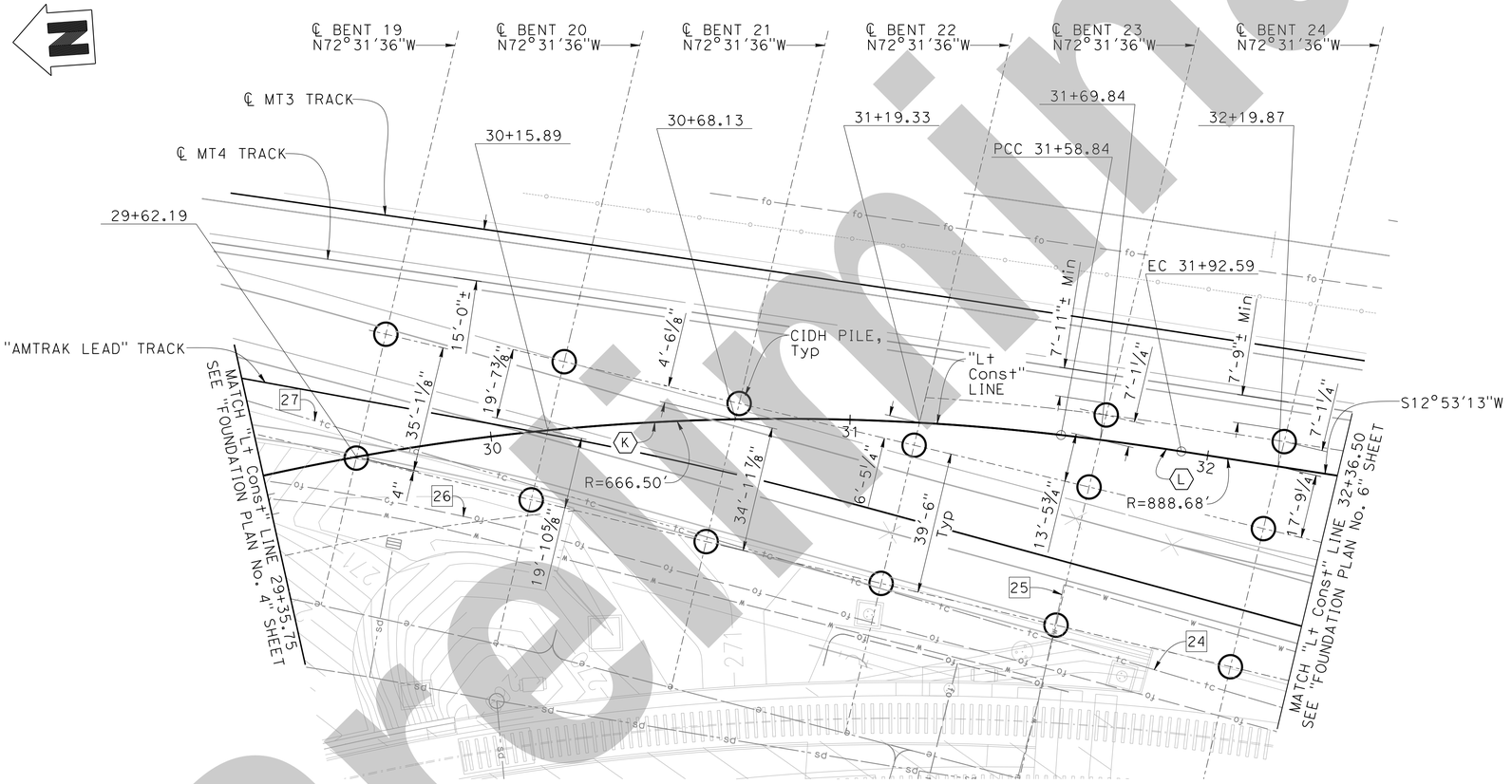

PLAN

CURVE DATA

(K) "Lt Const" LINE	(L) "Lt Const" LINE
R = 666.50'	R = 888.68'
Δ = 88°12'03"	Δ = 02°10'34"
T = 645.89'	T = 16.88'
L = 1026.01'	L = 33.75'

NOTE:
THE CONTRACTOR MUST VERIFY ALL CONTROLLING FIELD DIMENSIONS BEFORE ORDERING OR FABRICATING ANY MATERIAL.

X
DESIGN OVERSIGHT

X
SIGN OFF DATE

SCALE: 1" = 20'	VERT.DATUM NAVD 88	HORZ.DATUM NAD 83	DESIGN	BY A. Banesh	CHECKED X
PHOTOGRAMMETRY AS OF: X		ALIGNMENT TIES: X	DETAILS	BY R. Ewing	CHECKED X
SURVEYED BY X		DRAFTED BY X	QUANTITIES	BY X	CHECKED X
FIELD CHECKED BY X		CHECKED BY X			

PREPARED FOR THE STATE OF CALIFORNIA DEPARTMENT OF TRANSPORTATION

Daniel Weddell
PROJECT ENGINEER

BRIDGE No. X
POST MILE X

LAUS VIADUCT OVER US-101
FOUNDATION PLAN NO. 5

STRUCTURES FOUNDATION PLAN SHEET (ENGLISH) (REVISION 8/16/2021)

DATE PLOTTED => 2/20/2025 TIME PLOTTED => 6:35:55 PM
FILE => Foundation Plan No_5 USERNAME => ABANESH

ORIGINAL SCALE IN INCHES FOR REDUCED PLANS 0 1 2 3

PROJECT NUMBER & PHASE: 07150001191
COUNTY/ROUTE: LA/101
CONTRACT No.: 07-220001

DISREGARD PRINTS BEARING EARLIER REVISION DATES →

REVISION DATES	SHEET	OF
2/21/25	27	171

SHEET NO 51

INTERMEDIATE SUBMITTAL - 02/21/25

Preliminary

EXISTING UTILITIES (SEE NOTE 1):

28 EXISTING GAS, ABANDONED

29 EXISTING GAS, SCG

30 EXISTING TELECOM, ZAYO

NOTES

1. Types and locations of all utilities are provided for information only. The Contractor must verify all existing utilities and notify utility agencies prior to any removal, relocation, or new construction. see "ROADWAY PLANS" for utility details not shown.

2. For "PILE DATA TABLE", see "FOUNDATION DATA" sheet.

Dist	COUNTY	ROUTE	POST MILES TOTAL PROJECT	SHEET No.	TOTAL SHEETS
07	LA	105, 101	17.0/17.3, 0.4/0.7	X	X

X
REGISTERED CIVIL ENGINEER — DATE

X
PLANS APPROVAL DATE

REGISTERED PROFESSIONAL ENGINEER — Montserrat Martin — No. C64771 — Exp. 6/30/25 — CIVIL — STATE OF CALIFORNIA

THE STATE OF CALIFORNIA OR ITS OFFICERS OR AGENTS SHALL NOT BE RESPONSIBLE FOR THE ACCURACY OR COMPLETENESS OF SCANNED COPIES OF THIS PLAN SHEET.

HDR, INC
3220 EL CAMINO REAL
SUITE 200
IRVINE, CA 92602

LA METRO
ONE GATEWAY PLAZA
LOS ANGELES, CA 90012

LEGEND:

- CIDH Concrete Pile
- 36" CIDH Concrete Pile (At Abutment)
- XXX.X Bottom of Footing Elevation

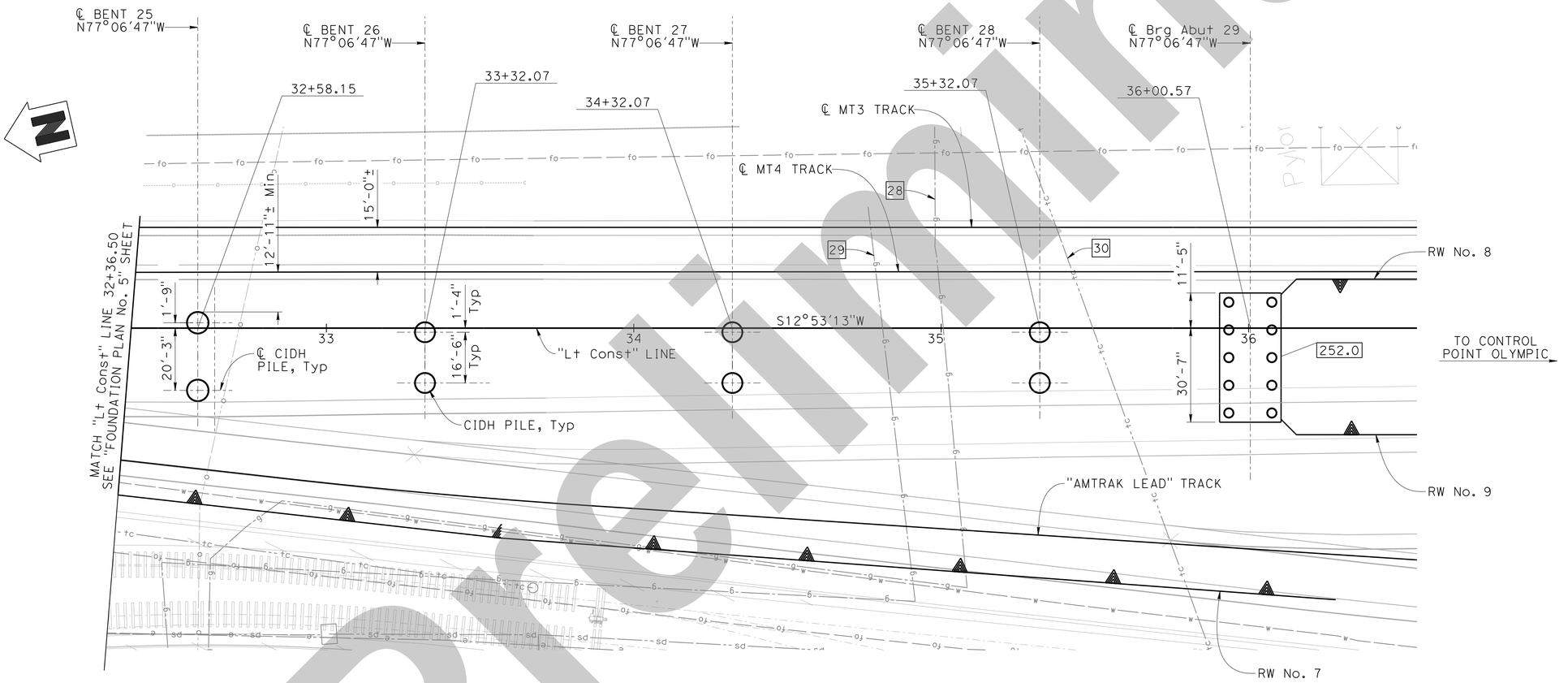

PLAN

NOTE:
THE CONTRACTOR MUST VERIFY ALL CONTROLLING FIELD DIMENSIONS BEFORE ORDERING OR FABRICATING ANY MATERIAL.

INTERMEDIATE SUBMITTAL - 02/21/25

Preliminary

X
DESIGN OVERSIGHT

X
SIGN OFF DATE

SCALE: 1" = 20' | VERT.DATUM NAVD 88 | HORZ.DATUM NAD 83
PHOTOGRAMMETRY AS OF: X | ALIGNMENT TIES: X
SURVEYED BY X | DRAFTED BY X
FIELD CHECKED BY X | CHECKED BY X

	BY	CHECKED
DESIGN	A. Banesh	X
DETAILS	R. Ewing	X
QUANTITIES	X	X

PREPARED FOR THE STATE OF CALIFORNIA DEPARTMENT OF TRANSPORTATION

Daniel Weddell
PROJECT ENGINEER

BRIDGE No. X
POST MILE X

LAUS VIADUCT OVER US-101
FOUNDATION PLAN NO. 6

STRUCTURES FOUNDATION PLAN SHEET (ENGLISH) (REVISION 8/16/2021)

DATE PLOTTED => 2/20/2025 TIME PLOTTED => 6:36:06 PM
FILE => Foundation Plan No_6 USERNAME => ABANESH

ORIGINAL SCALE IN INCHES FOR REDUCED PLANS 0 1 2 3

PROJECT NUMBER & PHASE: 07150001191
COUNTY/ROUTE: LA/101
CONTRACT No.: 07-220001

DISREGARD PRINTS BEARING EARLIER REVISION DATES →

REVISION DATES				SHEET	OF
2/21/25				28	171

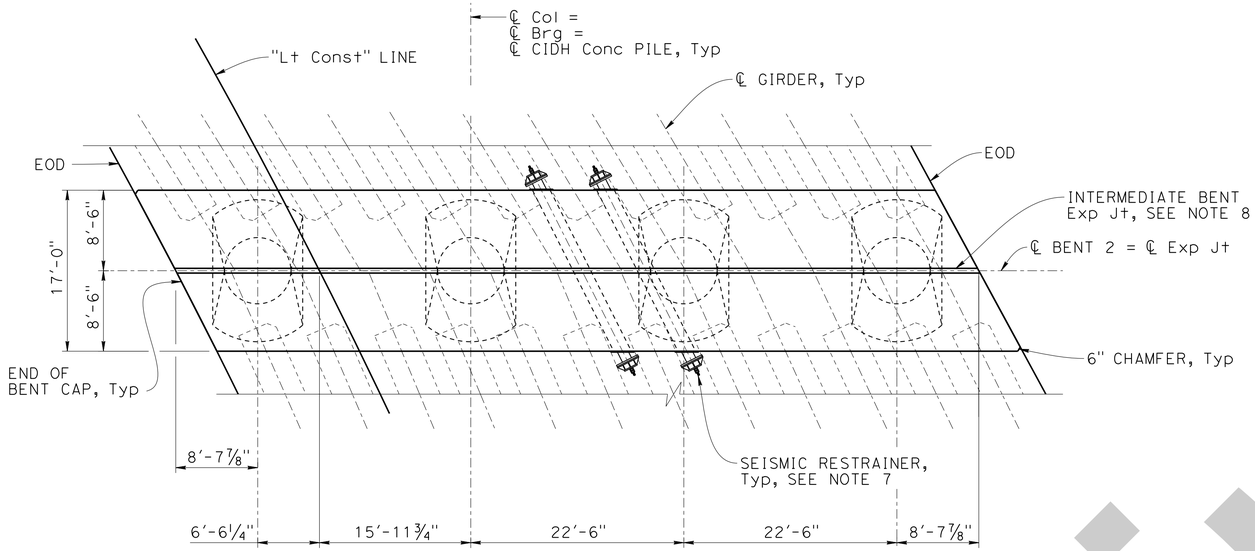

PLAN

⅛" = 1'-0"

NOTES:

1. For seismic isolation bearing details, see "SEISMIC ISOLATION BEARING DETAILS No. 1" thru "SEISMIC ISOLATION BEARING DETAILS No. 3" sheets.
2. For column flare geometry, see "COLUMN FLARE DETAILS No. 3" sheet.
3. For column and CIDH pile details, see "90 INCH CIDH PILE DETAILS" sheet.
4. For pile cutoff elevations, see "FOUNDATION DATA" sheet.
5. Bottom of bent cap is a constant offset from the top of deck, except at the deck step.
6. For bent cap reinforcement details, see "BENT DETAILS No. 7" sheet.
7. For seismic restrainer details, see "SEISMIC RESTRAINER DETAILS No. 1" and "SEISMIC RESTRAINER DETAILS No. 2" sheets.
8. For intermediate bent expansion joint details, see "INTERMEDIATE BENT EXPANSION JOINT" sheet.

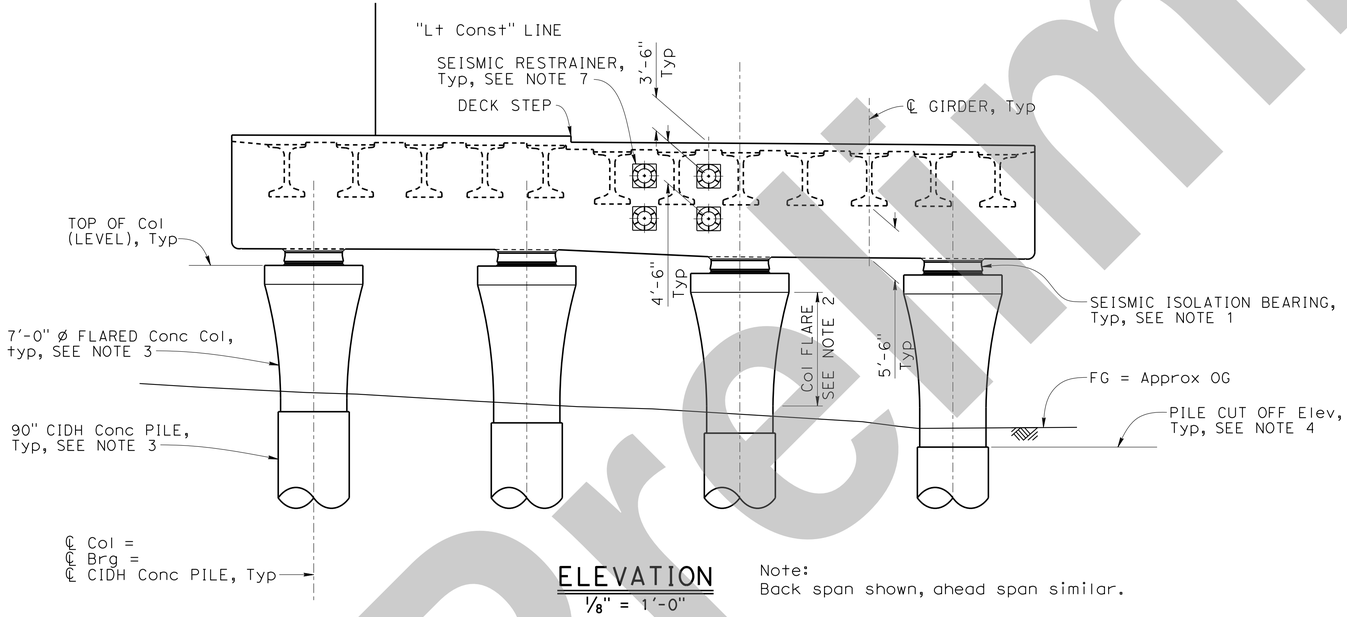

ELEVATION

⅛" = 1'-0"

Note:
Back span shown, ahead span similar.

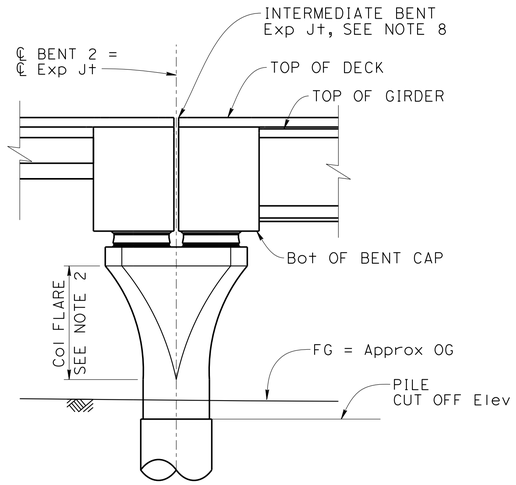

RIGHT END ELEVATION

⅛" = 1'-0"

NOTE:
THE CONTRACTOR MUST VERIFY ALL CONTROLLING FIELD DIMENSIONS BEFORE ORDERING OR FABRICATING ANY MATERIAL.

Dist	COUNTY	ROUTE	POST MILES TOTAL PROJECT	SHEET No.	TOTAL SHEETS
07	LA	105, 101	17.0/17.3, 0.4/0.7	X	X

X
REGISTERED CIVIL ENGINEER — DATE

X
PLANS APPROVAL DATE

REGISTERED PROFESSIONAL ENGINEER — Montserrat Martin — No. C64771 — Exp. 6/30/25 — CIVIL — STATE OF CALIFORNIA

THE STATE OF CALIFORNIA OR ITS OFFICERS OR AGENTS SHALL NOT BE RESPONSIBLE FOR THE ACCURACY OR COMPLETENESS OF SCANNED COPIES OF THIS PLAN SHEET.

HDR, INC
3220 EL CAMINO REAL
SUITE 200
IRVINE, CA 92602

LA METRO
ONE GATEWAY PLAZA
LOS ANGELES, CA 90012

INTERMEDIATE SUBMITTAL - 02/21/25

Preliminary

X
DESIGN OVERSIGHT

X
SIGN OFF DATE

	BY	CHECKED
DESIGN	A. Banesh	X
DETAILS	R. Ewing	X
QUANTITIES	X	X

PREPARED FOR THE STATE OF CALIFORNIA DEPARTMENT OF TRANSPORTATION

Daniel Weddell
PROJECT ENGINEER

BRIDGE No. X
POST MILE X

LAUS VIADUCT OVER US-101

BENT 2 LAYOUT

STRUCTURES DESIGN DETAIL SHEET (ENGLISH) (REVISION 8/16/2021)

DATE PLOTTED => 2/20/2025 TIME PLOTTED => 6:37:03 PM
FILE => Bent 2 Layout USERNAME => ABANESH

ORIGINAL SCALE IN INCHES FOR REDUCED PLANS 0 1 2 3

PROJECT NUMBER & PHASE: 07150001191
COUNTY/ROUTE: LA/101
CONTRACT No.: 07-220001

DISREGARD PRINTS BEARING EARLIER REVISION DATES →

REVISION DATES	SHEET	OF
2/21/25	36	171

Dist	COUNTY	ROUTE	POST MILES TOTAL PROJECT	SHEET No.	TOTAL SHEETS
07	LA	105, 101	17.0/17.3, 0.4/0.7	X	X

REGISTERED CIVIL ENGINEER — X DATE

X
PLANS APPROVAL DATE

Montserrat Martin
No. C64771
Exp. 6/30/25
CIVIL
REGISTERED PROFESSIONAL ENGINEER
STATE OF CALIFORNIA

THE STATE OF CALIFORNIA OR ITS OFFICERS OR AGENTS SHALL NOT BE RESPONSIBLE FOR THE ACCURACY OR COMPLETENESS OF SCANNED COPIES OF THIS PLAN SHEET.

HDR, INC
3220 EL CAMINO REAL
SUITE 200
IRVINE, CA 92602

LA METRO
ONE GATEWAY PLAZA
LOS ANGELES, CA 90012

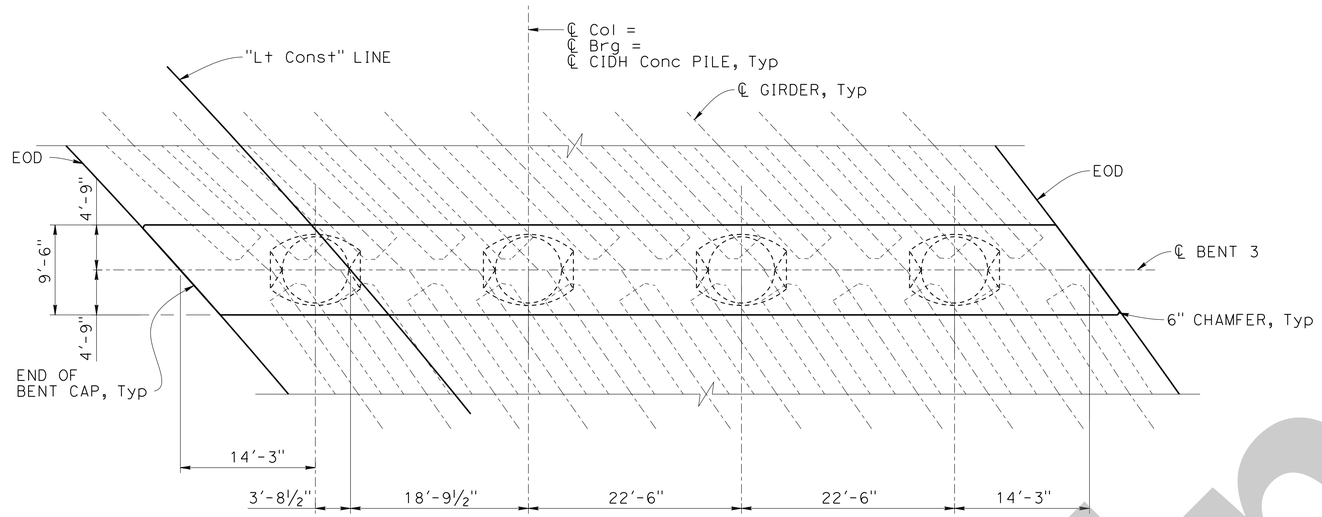

PLAN
⅛" = 1'-0"

NOTES:

1. Bent 3 shown, Bents 4 and 5 similar except as noted.
2. For seismic isolation bearing details, see "SEISMIC ISOLATION BEARING DETAILS No. 1" thru "SEISMIC ISOLATION BEARING DETAILS No. 3" sheets.
3. For column flare geometry, see "COLUMN FLARE DETAILS No. 3" sheet.
4. For column and CIDH pile details, see "90 INCH CIDH PILE DETAILS" sheet.
5. For pile cutoff elevations, see "FOUNDATION DATA" sheet.
6. Bottom of bent cap is a constant offset from the top of deck, except at the deck step.

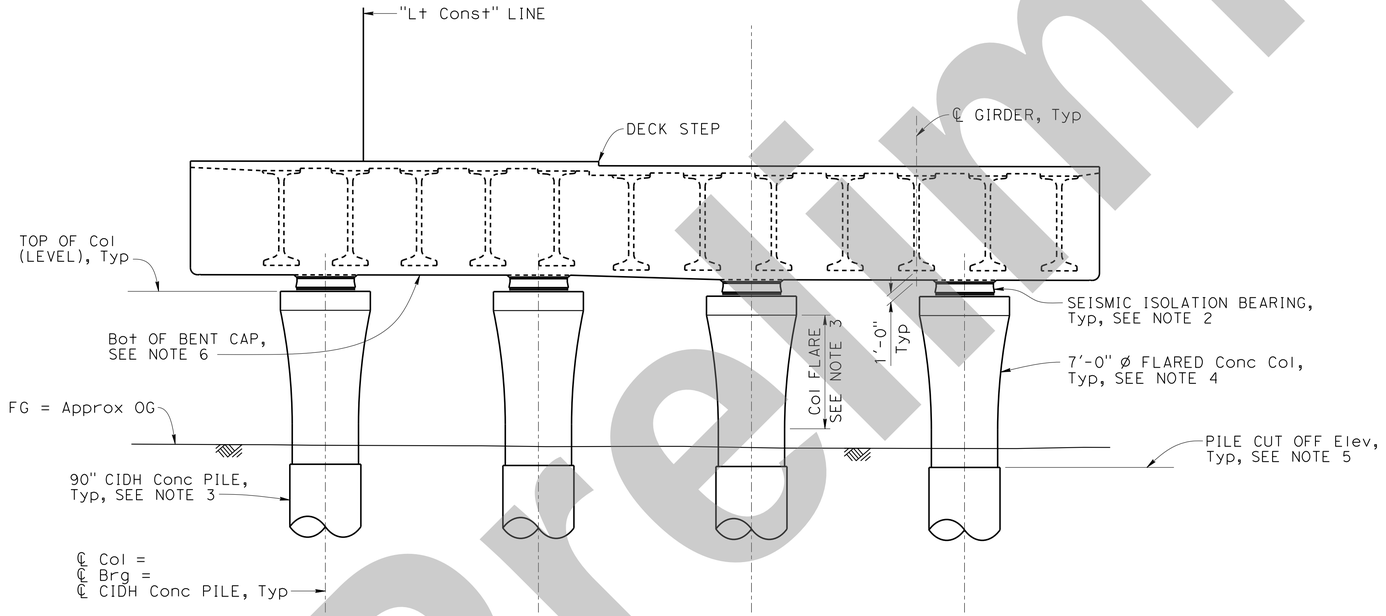

ELEVATION
⅛" = 1'-0"

Note: Back span shown, ahead span similar.

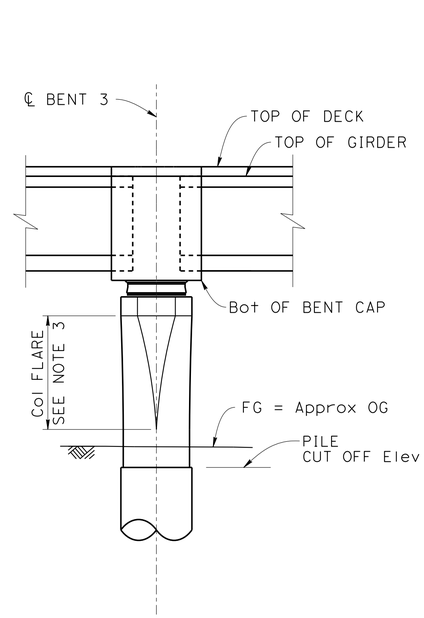

RIGHT END ELEVATION
⅛" = 1'-0"

NOTE:
THE CONTRACTOR MUST VERIFY ALL CONTROLLING FIELD DIMENSIONS BEFORE ORDERING OR FABRICATING ANY MATERIAL.

INTERMEDIATE SUBMITTAL - 02/21/25

Preliminary

X
DESIGN OVERSIGHT

X
SIGN OFF DATE

	BY	CHECKED
DESIGN	A. Banesh	X
DETAILS	R. Ewing	X
QUANTITIES	X	X

PREPARED FOR THE STATE OF CALIFORNIA DEPARTMENT OF TRANSPORTATION

Daniel Weddell
PROJECT ENGINEER

BRIDGE No. X
POST MILE X

LAUS VIADUCT OVER US-101
BENTS 3, 4 AND 5 LAYOUT

STRUCTURES DESIGN DETAIL SHEET (ENGLISH) (REVISION 8/16/2021)

DATE PLOTTED => 2/20/2025 TIME PLOTTED => 6:37:07 PM
FILE => Bents 3,4 and 5 Layout USERNAME => ABANESH

ORIGINAL SCALE IN INCHES FOR REDUCED PLANS 0 1 2 3

PROJECT NUMBER & PHASE: 07150001191
COUNTY/ROUTE: LA/101
CONTRACT No.: 07-220001

DISREGARD PRINTS BEARING EARLIER REVISION DATES →

REVISION DATES				SHEET	OF
2/21/25				37	171

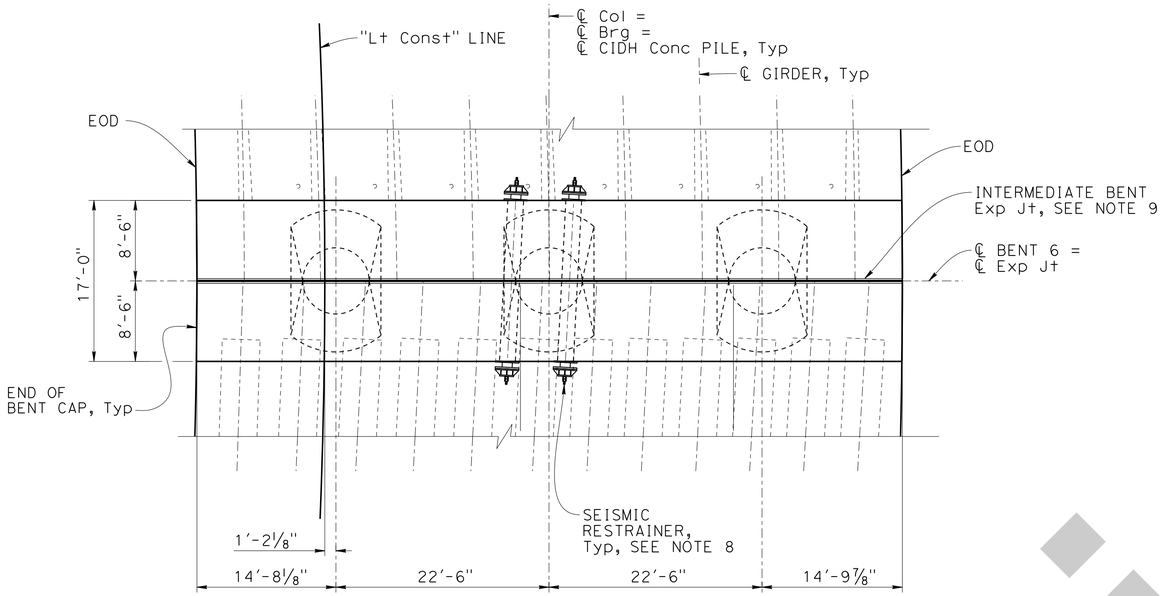

PLAN
⅛" = 1'-0"

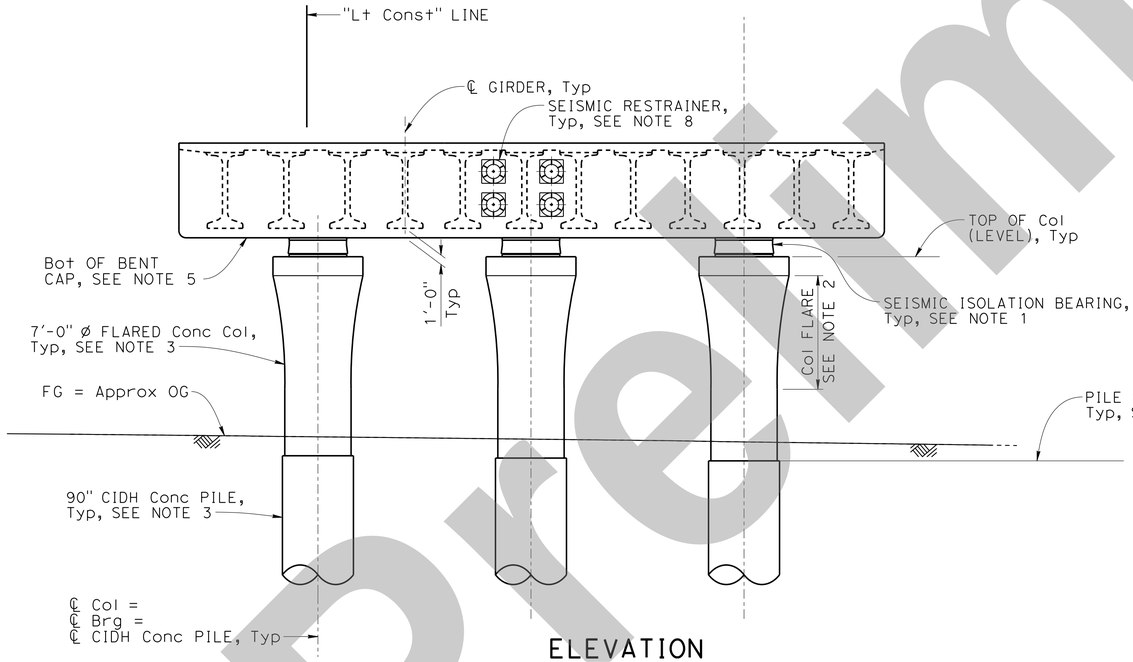

ELEVATION
⅛" = 1'-0"

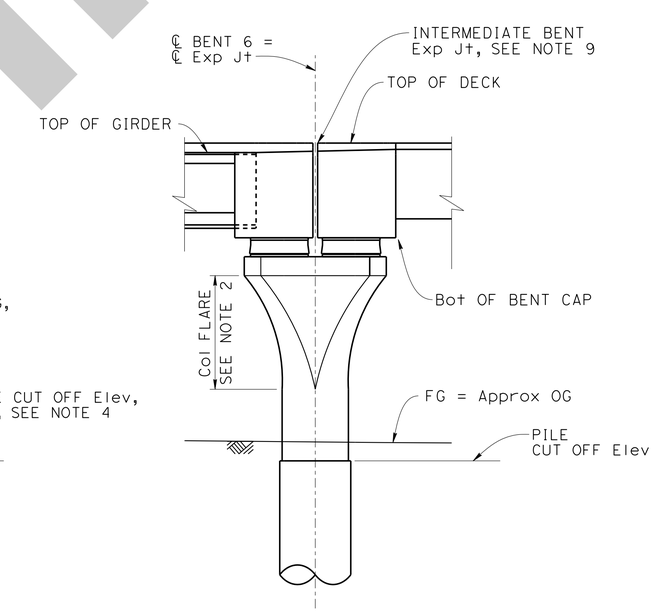

RIGHT END ELEVATION
⅛" = 1'-0"

NOTES:

1. For seismic isolation bearing details, see "SEISMIC ISOLATION BEARING DETAILS No. 1" thru "SEISMIC ISOLATION BEARING DETAILS No. 3" sheets.
2. For column flare geometry, see "COLUMN FLARE DETAILS No. 3" sheet.
3. For column and CIDH pile details, see "90 INCH CIDH PILE DETAILS" sheet.
4. For pile cutoff elevations, see "FOUNDATION DATA" sheet.
5. Bottom of bent cap is a constant offset from the top of deck.
6. For bent cap reinforcement details, see "BENT DETAILS No. 7" sheet.
7. For seismic restrainer details, see "SEISMIC RESTRAINER DETAILS No. 1" and "SEISMIC RESTRAINER DETAILS No. 2" sheets.
8. For intermediate bent expansion joint details, see "INTERMEDIATE BENT EXPANSION JOINT" sheet.

NOTE:
THE CONTRACTOR MUST VERIFY ALL CONTROLLING FIELD DIMENSIONS BEFORE ORDERING OR FABRICATING ANY MATERIAL.

Dist	COUNTY	ROUTE	POST MILES TOTAL PROJECT	SHEET No.	TOTAL SHEETS
07	LA	105, 101	17.0/17.3, 0.4/0.7	X	X

X
REGISTERED CIVIL ENGINEER — DATE

X
PLANS APPROVAL DATE

REGISTERED PROFESSIONAL ENGINEER — Montserrat Martin — No. C64771 — Exp. 6/30/25 — CIVIL — STATE OF CALIFORNIA

THE STATE OF CALIFORNIA OR ITS OFFICERS OR AGENTS SHALL NOT BE RESPONSIBLE FOR THE ACCURACY OR COMPLETENESS OF SCANNED COPIES OF THIS PLAN SHEET.

HDR, INC
3220 EL CAMINO REAL
SUITE 200
IRVINE, CA 92602

LA METRO
ONE GATEWAY PLAZA
LOS ANGELES, CA 90012

INTERMEDIATE SUBMITTAL - 02/21/25

Preliminary

X
DESIGN OVERSIGHT

X
SIGN OFF DATE

	BY	CHECKED
DESIGN	A. Banesh	X
DETAILS	R. Ewing	X
QUANTITIES	X	X

PREPARED FOR THE STATE OF CALIFORNIA DEPARTMENT OF TRANSPORTATION

Daniel Weddell
PROJECT ENGINEER

BRIDGE No. X
POST MILE X

LAUS VIADUCT OVER US-101
BENT 6 LAYOUT

STRUCTURES DESIGN DETAIL SHEET (ENGLISH) (REVISION 8/16/2021)

DATE PLOTTED => 2/20/2025 TIME PLOTTED => 6:37:12 PM
FILE => Bent 6 Layout USERNAME => ABANESH

ORIGINAL SCALE IN INCHES FOR REDUCED PLANS 0 1 2 3

PROJECT NUMBER & PHASE: 07150001191
COUNTY/ROUTE: LA/101
CONTRACT No.: 07-220001

DISREGARD PRINTS BEARING EARLIER REVISION DATES →

REVISION DATES				SHEET	OF
2/21/25				38	171

Dist	COUNTY	ROUTE	POST MILES TOTAL PROJECT	SHEET No.	TOTAL SHEETS
07	LA	105, 101	17.0/17.3, 0.4/0.7	X	X

REGISTERED CIVIL ENGINEER — X DATE

X
PLANS APPROVAL DATE

Montserrat Martin
No. C64771
Exp. 6/30/25
CIVIL
REGISTERED PROFESSIONAL ENGINEER
STATE OF CALIFORNIA

THE STATE OF CALIFORNIA OR ITS OFFICERS OR AGENTS SHALL NOT BE RESPONSIBLE FOR THE ACCURACY OR COMPLETENESS OF SCANNED COPIES OF THIS PLAN SHEET.

HDR, INC
3220 EL CAMINO REAL
SUITE 200
IRVINE, CA 92602

LA METRO
ONE GATEWAY PLAZA
LOS ANGELES, CA 90012

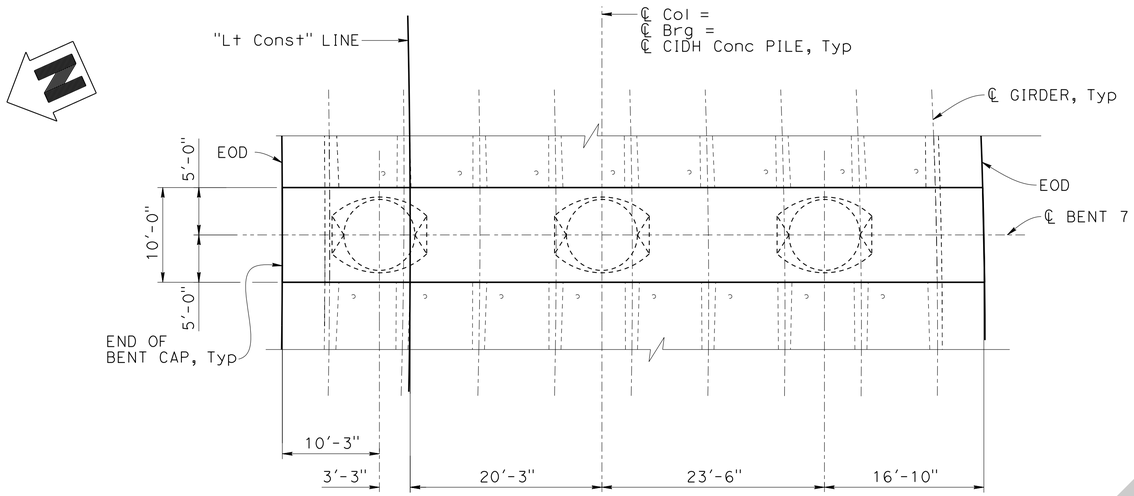

PLAN
1/8" = 1'-0"

NOTES:

1. For seismic isolation bearing details, see "SEISMIC ISOLATION BEARING DETAILS No. 1" thru "SEISMIC ISOLATION BEARING DETAILS No. 3" sheets.
2. For column flare geometry, see "COLUMN FLARE DETAILS No. 4" sheet.
3. For column and CIDH pile details, see "96 INCH CIDH PILE DETAILS" sheet.
4. For pile cutoff elevations, see "FOUNDATION DATA" sheet.
5. Bottom of bent cap is a constant offset from the top of deck.
6. For bent cap reinforcement details, see "BENT DETAILS No. 1" and "BENT DETAILS No. 2" sheets.

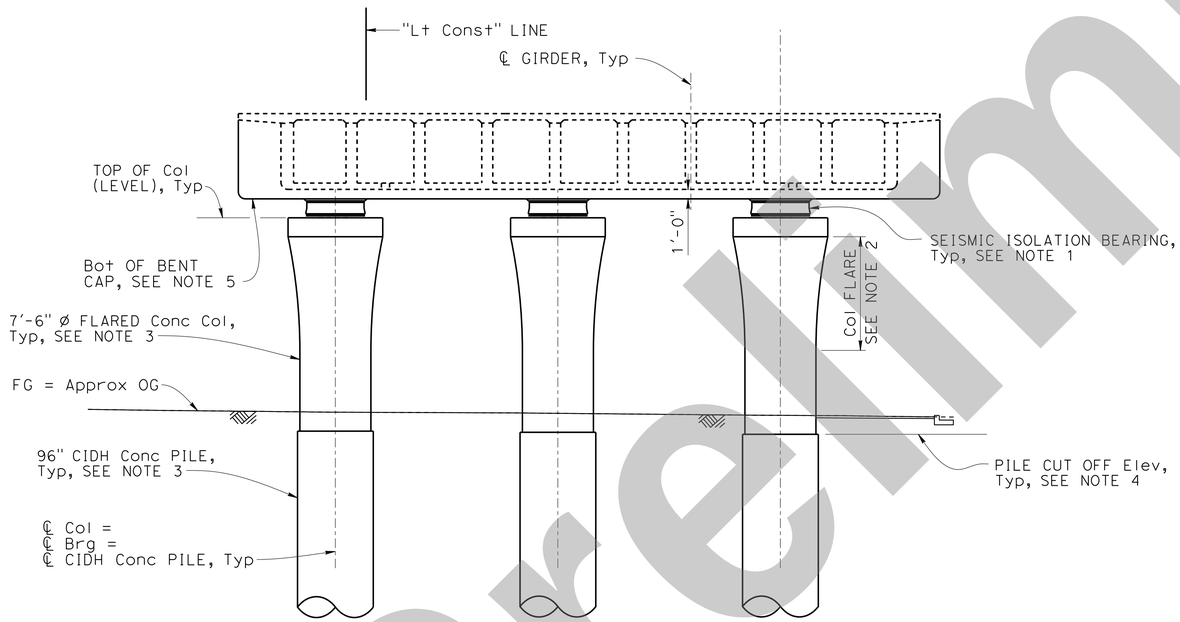

ELEVATION
1/8" = 1'-0"

Note: Back span shown, Ahead span similar.

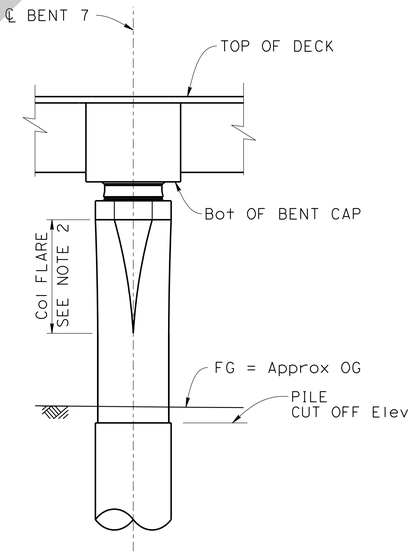

RIGHT END ELEVATION
1/8" = 1'-0"

NOTE:
THE CONTRACTOR MUST VERIFY ALL CONTROLLING FIELD DIMENSIONS BEFORE ORDERING OR FABRICATING ANY MATERIAL.

Preliminary

INTERMEDIATE SUBMITTAL - 02/21/25

X
DESIGN OVERSIGHT
X
SIGN OFF DATE

	BY	CHECKED
DESIGN	A. Banesh	X
DETAILS	R. Ewing	X
QUANTITIES	X	X

PREPARED FOR THE STATE OF CALIFORNIA DEPARTMENT OF TRANSPORTATION

Daniel Weddell
PROJECT ENGINEER

BRIDGE No. X
POST MILE X

LAUS VIADUCT OVER US-101
BENT 7 LAYOUT

STRUCTURES DESIGN DETAIL SHEET (ENGLISH) (REVISION 8/16/2021)

DATE PLOTTED => 2/20/2025
FILE => Bent 7 Layout
TIME PLOTTED => 6:37:17 PM
USERNAME => ABANESH

ORIGINAL SCALE IN INCHES FOR REDUCED PLANS 0 1 2 3

PROJECT NUMBER & PHASE: 07150001191
COUNTY/ROUTE: LA/101
CONTRACT No.: 07-220001

DISREGARD PRINTS BEARING EARLIER REVISION DATES →

REVISION DATES	SHEET	OF
2/21/25	39	171

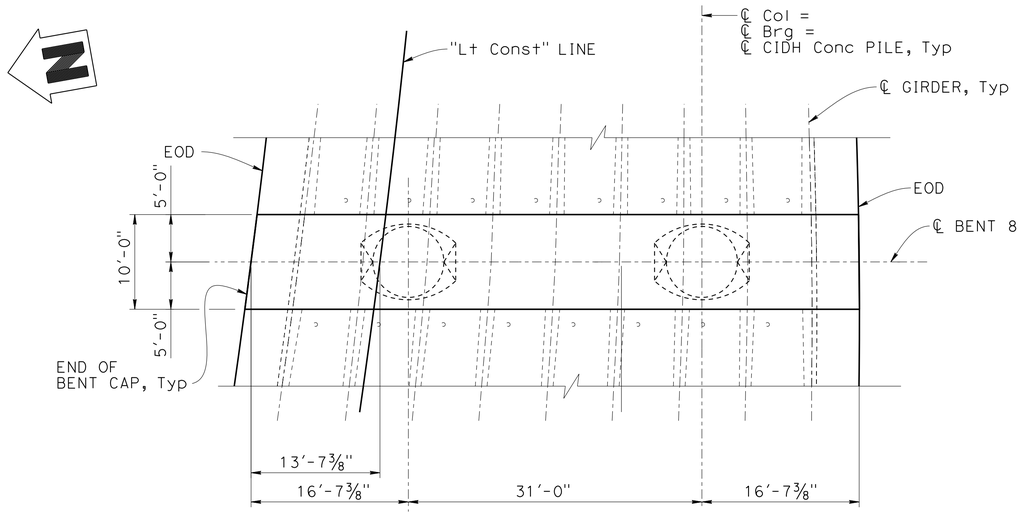

PLAN
⅛" = 1'-0"

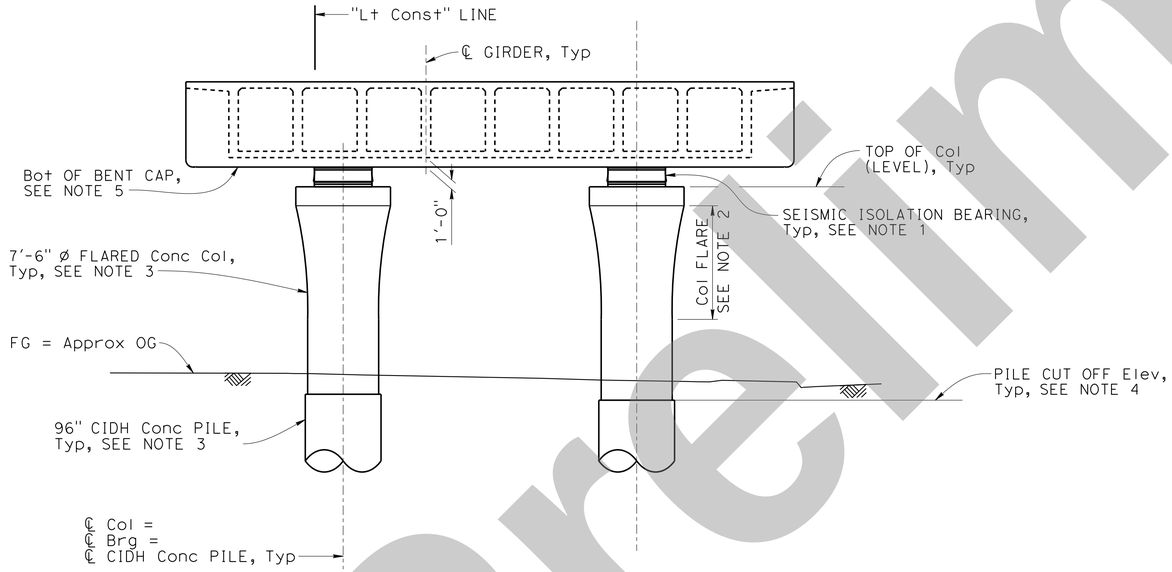

ELEVATION
⅛" = 1'-0"

Note: Back span shown, ahead span similar.

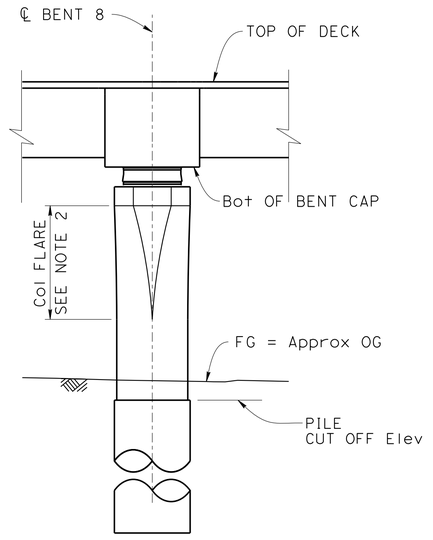

RIGHT END ELEVATION
⅛" = 1'-0"

NOTES:

1. For seismic isolation bearing details, see "SEISMIC ISOLATION BEARING DETAILS No. 1" thru "SEISMIC ISOLATION BEARING DETAILS No. 3" sheets.
2. For column flare geometry, see "COLUMN FLARE DETAILS No. 4" sheet.
3. For column and CIDH pile details, see "96 INCH CIDH PILE DETAILS" sheet.
4. For pile cutoff elevations, see "FOUNDATION DATA" sheet.
5. Bottom of bent cap is a constant offset from the top of deck.
6. For bent cap reinforcement details, see "BENT DETAILS No. 1" and BENT DETAILS No. 2" sheets.

NOTE:
THE CONTRACTOR MUST VERIFY ALL CONTROLLING FIELD DIMENSIONS BEFORE ORDERING OR FABRICATING ANY MATERIAL.

Dist	COUNTY	ROUTE	POST MILES TOTAL PROJECT	SHEET No.	TOTAL SHEETS
07	LA	105, 101	17.0/17.3, 0.4/0.7	X	X

X
REGISTERED CIVIL ENGINEER — DATE

X
PLANS APPROVAL DATE

REGISTERED PROFESSIONAL ENGINEER — Montserrat Martin — No. C64771 — Exp. 6/30/25 — CIVIL — STATE OF CALIFORNIA

THE STATE OF CALIFORNIA OR ITS OFFICERS OR AGENTS SHALL NOT BE RESPONSIBLE FOR THE ACCURACY OR COMPLETENESS OF SCANNED COPIES OF THIS PLAN SHEET.

HDR, INC
3220 EL CAMINO REAL
SUITE 200
IRVINE, CA 92602

LA METRO
ONE GATEWAY PLAZA
LOS ANGELES, CA 90012

INTERMEDIATE SUBMITTAL - 02/21/25

Preliminary

X
DESIGN OVERSIGHT

X
SIGN OFF DATE

	BY	CHECKED
DESIGN	A. Banesh	X
DETAILS	R. Ewing	X
QUANTITIES	X	X

PREPARED FOR THE STATE OF CALIFORNIA DEPARTMENT OF TRANSPORTATION

Daniel Weddell
PROJECT ENGINEER

BRIDGE No. X
POST MILE X

LAUS VIADUCT OVER US-101

BENT 8 LAYOUT

STRUCTURES DESIGN DETAIL SHEET (ENGLISH) (REVISION 8/16/2021)

DATE PLOTTED => 2/20/2025 TIME PLOTTED => 6:37:22 PM
FILE => Bent 8 Layout USERNAME => ABANESH

ORIGINAL SCALE IN INCHES FOR REDUCED PLANS 0 1 2 3

PROJECT NUMBER & PHASE: 07150001191
COUNTY/ROUTE: LA/101
CONTRACT No.: 07-220001

DISREGARD PRINTS BEARING EARLIER REVISION DATES →

REVISION DATES				SHEET	OF
2/21/25				40	171

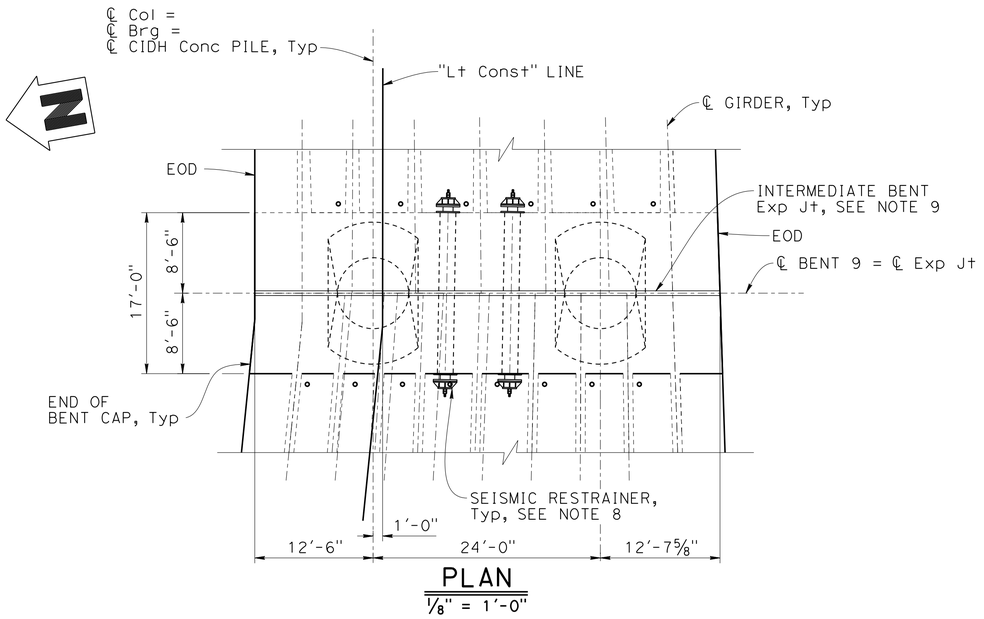

PLAN

⅛" = 1'-0"

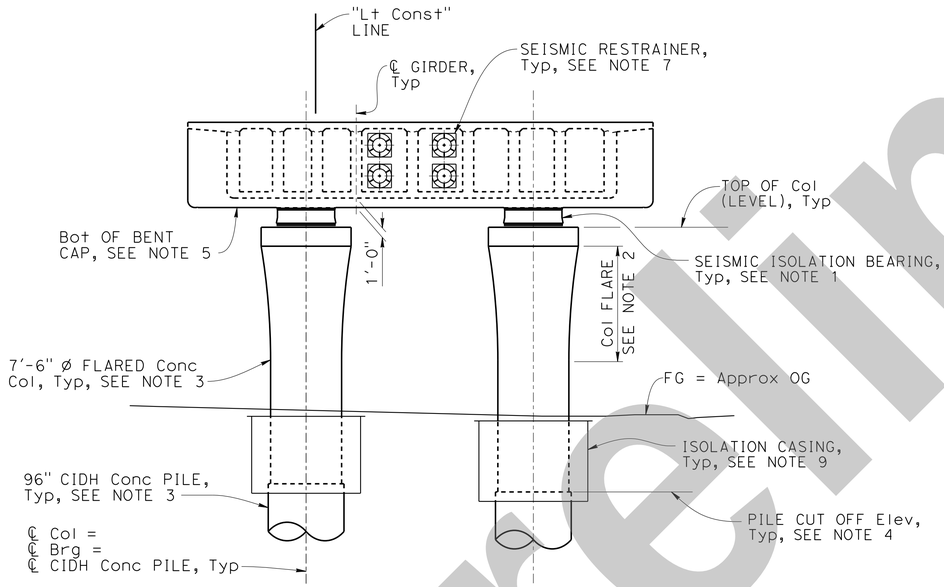

ELEVATION

⅛" = 1'-0"

Note:
Back span shown, ahead span similar.

NOTES:

1. For seismic isolation bearing details, see "SEISMIC ISOLATION BEARING DETAILS No. 1" thru "SEISMIC ISOLATION BEARING DETAILS No. 3" sheets.
2. For column flare geometry, see "COLUMN FLARE DETAILS No. 4" sheet.
3. For column and CIDH pile details, see "96 INCH CIDH PILE DETAILS" sheet.
4. For pile cutoff elevations, see "FOUNDATION DATA" sheet.
5. Bottom of bent cap is a constant offset from the top of deck.
6. For bent cap reinforcement details, see "BENT DETAILS No. 7" sheet.
7. For seismic restrainer details, see "SEISMIC RESTRAINER DETAILS No. 1" and "SEISMIC RESTRAINER DETAILS No. 2" sheets.
8. For intermediate bent expansion joint details, see "INTERMEDIATE BENT EXPANSION JOINT" sheet.
9. For isolation casing length and details, see "COLUMN ISOLATION CASING DETAILS" sheet.

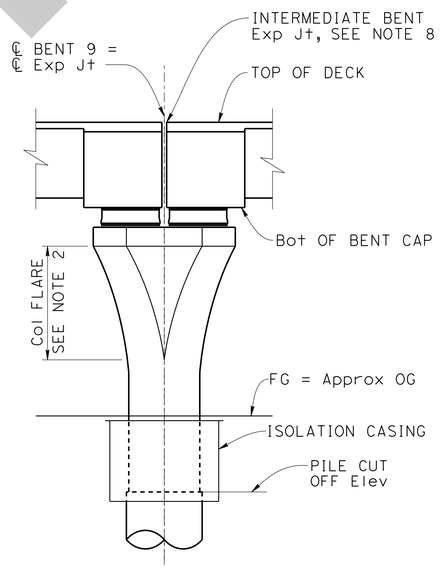

RIGHT END ELEVATION

⅛" = 1'-0"

NOTE:
THE CONTRACTOR MUST VERIFY ALL CONTROLLING FIELD DIMENSIONS BEFORE ORDERING OR FABRICATING ANY MATERIAL.

Dist	COUNTY	ROUTE	POST MILES TOTAL PROJECT	SHEET No.	TOTAL SHEETS
07	LA	105, 101	17.0/17.3, 0.4/0.7	X	X

X
REGISTERED CIVIL ENGINEER — DATE

X
PLANS APPROVAL DATE

REGISTERED PROFESSIONAL ENGINEER — Montserrat Martin — No. C64771 — Exp. 6/30/25 — CIVIL — STATE OF CALIFORNIA

THE STATE OF CALIFORNIA OR ITS OFFICERS OR AGENTS SHALL NOT BE RESPONSIBLE FOR THE ACCURACY OR COMPLETENESS OF SCANNED COPIES OF THIS PLAN SHEET.

HDR, INC
3220 EL CAMINO REAL
SUITE 200
IRVINE, CA 92602

LA METRO
ONE GATEWAY PLAZA
LOS ANGELES, CA 90012

INTERMEDIATE SUBMITTAL - 02/21/25

X
DESIGN OVERSIGHT

X
SIGN OFF DATE

	BY	CHECKED
DESIGN	A. Banesh	X
DETAILS	R. Ewing	X
QUANTITIES	X	X

PREPARED FOR THE STATE OF CALIFORNIA DEPARTMENT OF TRANSPORTATION

Daniel Weddell
PROJECT ENGINEER

BRIDGE No. X
POST MILE X

LAUS VIADUCT OVER US-101

BENT 9 LAYOUT

STRUCTURES DESIGN DETAIL SHEET (ENGLISH) (REVISION 8/16/2021)

DATE PLOTTED => 2/20/2025 TIME PLOTTED => 6:37:29 PM
FILE => Bent 9 Layout USERNAME => ABANESH

ORIGINAL SCALE IN INCHES FOR REDUCED PLANS 0 1 2 3

PROJECT NUMBER & PHASE: 07150001191
COUNTY/ROUTE: LA/101
CONTRACT No.: 07-220001

DISREGARD PRINTS BEARING EARLIER REVISION DATES →

REVISION DATES	SHEET	OF
2/21/25	41	171

Preliminary

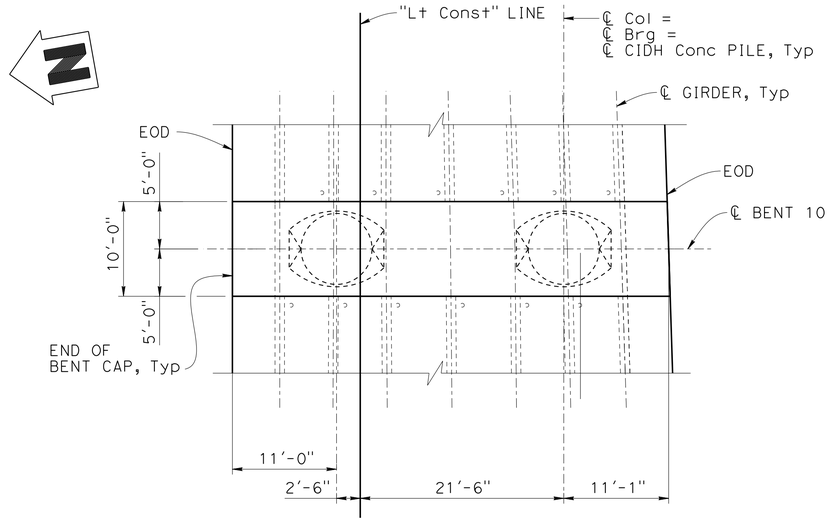

PLAN
1/8" = 1'-0"

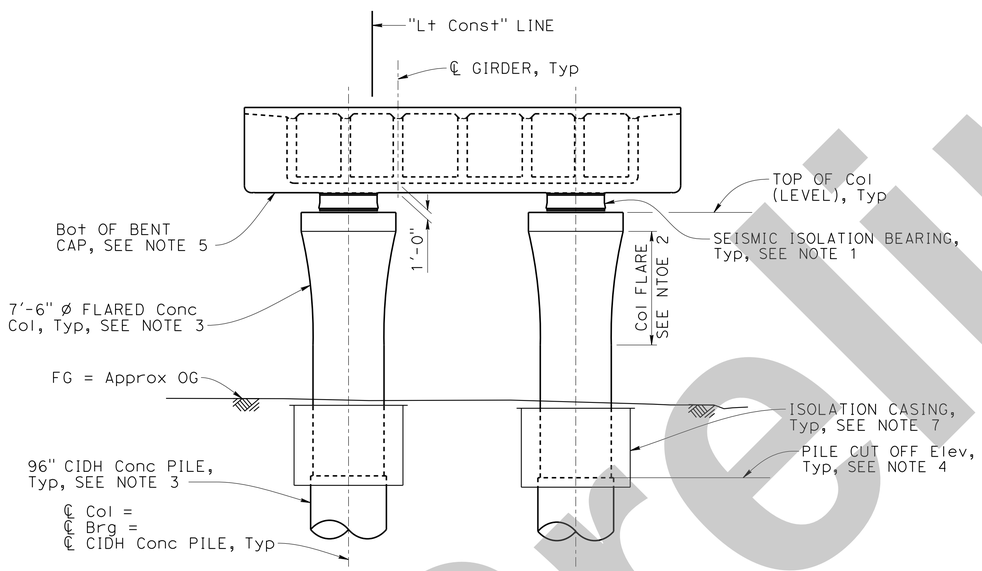

ELEVATION
1/8" = 1'-0"

Note: Back span shown, ahead span similar.

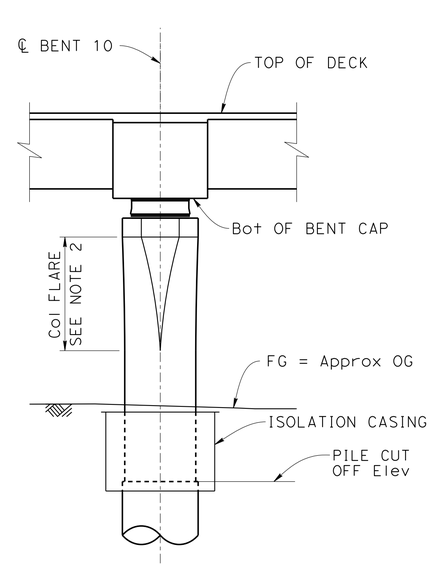

RIGHT END ELEVATION
1/8" = 1'-0"

NOTES:

1. For seismic isolation bearing details, see "SEISMIC ISOLATION BEARING DETAILS No. 1" thru "SEISMIC ISOLATION BEARING DETAILS No. 3" sheets.
2. For column flare geometry, see "COLUMN FLARE DETAILS No. 4" sheet.
3. For column and CIDH pile details, see "96 INCH CIDH PILE DETAILS" sheet.
4. For pile cutoff elevations, see "FOUNDATION DATA" sheet.
5. Bottom of bent cap is a constant offset from the top of deck.
6. For bent cap reinforcement details, see "BENT DETAILS No. 1" and "BENT DETAILS No. 2" sheets.
7. For isolation casing length and details, see "COLUMN ISOLATION CASING DETAILS" sheet.

NOTE:
THE CONTRACTOR MUST VERIFY ALL CONTROLLING FIELD DIMENSIONS BEFORE ORDERING OR FABRICATING ANY MATERIAL.

Dist	COUNTY	ROUTE	POST MILES TOTAL PROJECT	SHEET No.	TOTAL SHEETS
07	LA	105, 101	17.0/17.3, 0.4/0.7	X	X

REGISTERED CIVIL ENGINEER — DATE X

PLANS APPROVAL DATE X

REGISTERED PROFESSIONAL ENGINEER — Montserrat Martin — No. C64771 — Exp. 6/30/25 — CIVIL — STATE OF CALIFORNIA

THE STATE OF CALIFORNIA OR ITS OFFICERS OR AGENTS SHALL NOT BE RESPONSIBLE FOR THE ACCURACY OR COMPLETENESS OF SCANNED COPIES OF THIS PLAN SHEET.

HDR, INC
3220 EL CAMINO REAL
SUITE 200
IRVINE, CA 92602

LA METRO
ONE GATEWAY PLAZA
LOS ANGELES, CA 90012

INTERMEDIATE SUBMITTAL - 02/21/25

Preliminary

X
DESIGN OVERSIGHT
X
SIGN OFF DATE

	BY	CHECKED
DESIGN	A. Banesh	X
DETAILS	R. Ewing	X
QUANTITIES	X	X

PREPARED FOR THE
STATE OF CALIFORNIA
DEPARTMENT OF TRANSPORTATION

Daniel Weddell
PROJECT ENGINEER

BRIDGE No. X
POST MILE X

LAUS VIADUCT OVER US-101
BENT 10 LAYOUT

STRUCTURES DESIGN DETAIL SHEET (ENGLISH) (REVISION 8/16/2021)

DATE PLOTTED => 2/20/2025 TIME PLOTTED => 6:37:34 PM
FILE => Bent 10 Layout USERNAME => ABANESH

ORIGINAL SCALE IN INCHES FOR REDUCED PLANS 0 1 2 3

PROJECT NUMBER & PHASE: 07150001191
COUNTY/ROUTE: LA/101
CONTRACT No.: 07-220001

DISREGARD PRINTS BEARING EARLIER REVISION DATES →

REVISION DATES				SHEET	OF
2/21/25				42	171

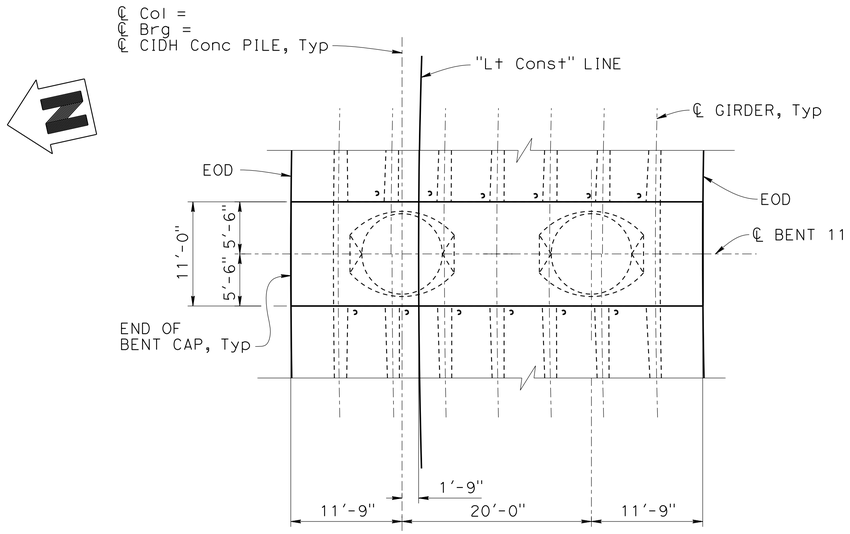

PLAN
1/8" = 1'-0"

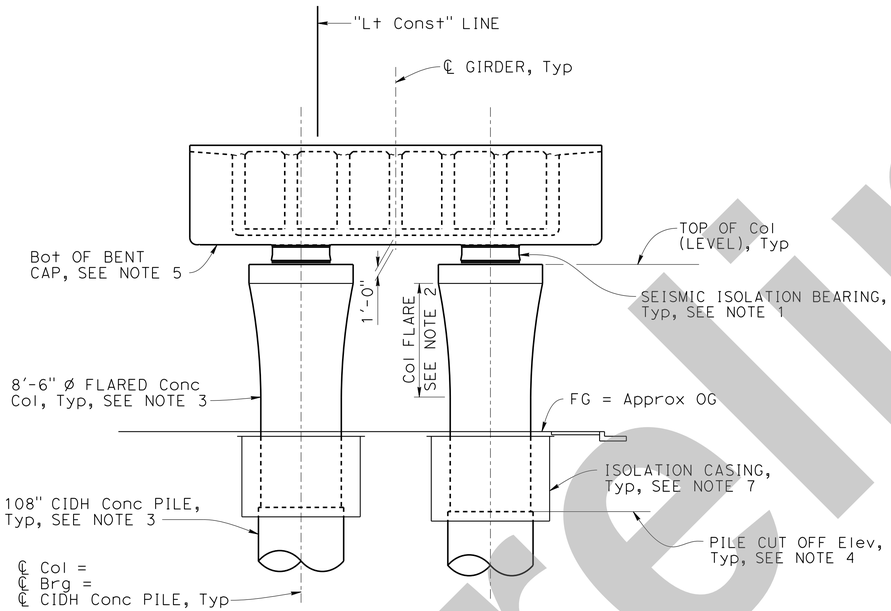

ELEVATION
1/8" = 1'-0"

Note: Back span shown, ahead span similar.

NOTES:

1. For seismic isolation bearing details, see "SEISMIC ISOLATION BEARING DETAILS No. 1" thru "SEISMIC ISOLATION BEARING DETAILS No. 3" sheets.
2. For column flare geometry, see "COLUMN FLARE DETAILS No. 5" sheet.
3. For column and CIDH pile details, see "108 INCH CIDH PILE DETAILS" sheet.
4. For pile cutoff elevations, see "FOUNDATION DATA" sheet.
5. Bottom of bent cap is a constant offset from the top of deck.
6. For bent cap reinforcement details, see "BENT DETAILS No. 1" and "BENT DETAILS No. 2" sheets.
7. For isolation casing length and details, see "COLUMN ISOLATION CASING DETAILS" sheet.

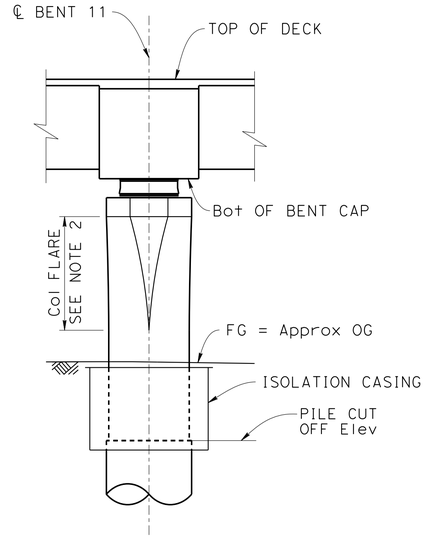

RIGHT END ELEVATION
1/8" = 1'-0"

NOTE:
THE CONTRACTOR MUST VERIFY ALL CONTROLLING FIELD DIMENSIONS BEFORE ORDERING OR FABRICATING ANY MATERIAL.

Dist	COUNTY	ROUTE	POST MILES TOTAL PROJECT	SHEET No.	TOTAL SHEETS
07	LA	105, 101	17.0/17.3, 0.4/0.7	X	X

X
REGISTERED CIVIL ENGINEER — DATE

X
PLANS APPROVAL DATE

REGISTERED PROFESSIONAL ENGINEER — Montserrat Martin — No. C64771 — Exp. 6/30/25 — CIVIL — STATE OF CALIFORNIA

THE STATE OF CALIFORNIA OR ITS OFFICERS OR AGENTS SHALL NOT BE RESPONSIBLE FOR THE ACCURACY OR COMPLETENESS OF SCANNED COPIES OF THIS PLAN SHEET.

HDR, INC
3220 EL CAMINO REAL
SUITE 200
IRVINE, CA 92602

LA METRO
ONE GATEWAY PLAZA
LOS ANGELES, CA 90012

INTERMEDIATE SUBMITTAL - 02/21/25

Preliminary

X
DESIGN OVERSIGHT

X
SIGN OFF DATE

	BY	CHECKED
DESIGN	A. Banesh	X
DETAILS	R. Ewing	X
QUANTITIES	X	X

PREPARED FOR THE STATE OF CALIFORNIA DEPARTMENT OF TRANSPORTATION

Daniel Weddell
PROJECT ENGINEER

BRIDGE No. X
POST MILE X

LAUS VIADUCT OVER US-101
BENT 11 LAYOUT

STRUCTURES DESIGN DETAIL SHEET (ENGLISH) (REVISION 8/16/2021)

DATE PLOTTED => 2/20/2025 TIME PLOTTED => 6:37:39 PM
FILE => Bent 11 Layout USERNAME => ABANESH

ORIGINAL SCALE IN INCHES FOR REDUCED PLANS 0 1 2 3

PROJECT NUMBER & PHASE: 07150001191
COUNTY/ROUTE: LA/101
CONTRACT No.: 07-220001

DISREGARD PRINTS BEARING EARLIER REVISION DATES →

REVISION DATES					SHEET	OF
2/21/25					43	171

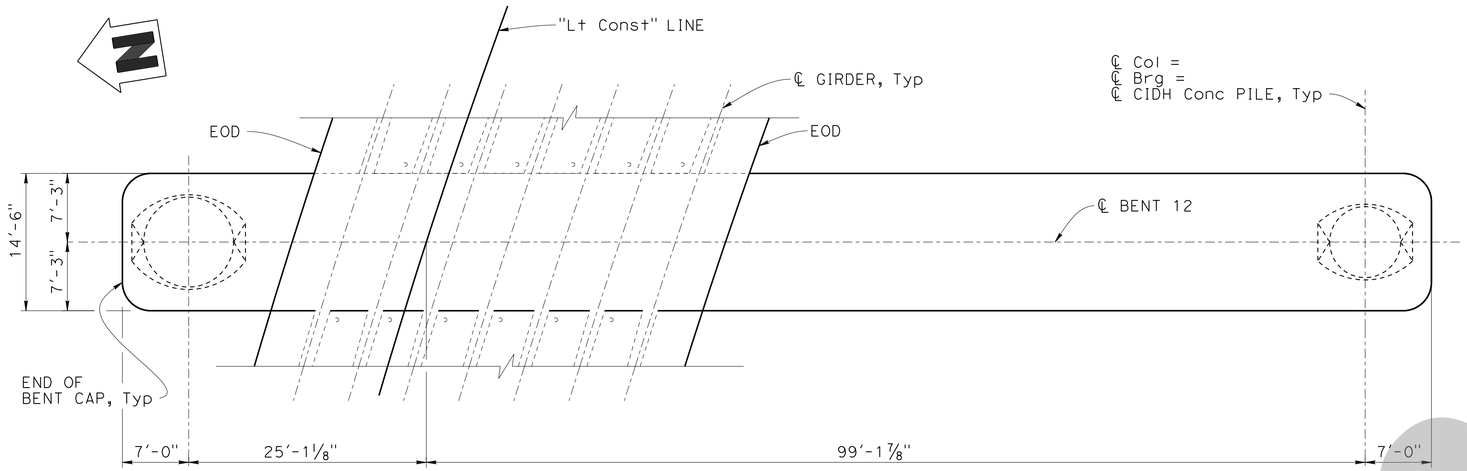

PLAN
⅛" = 1'-0"

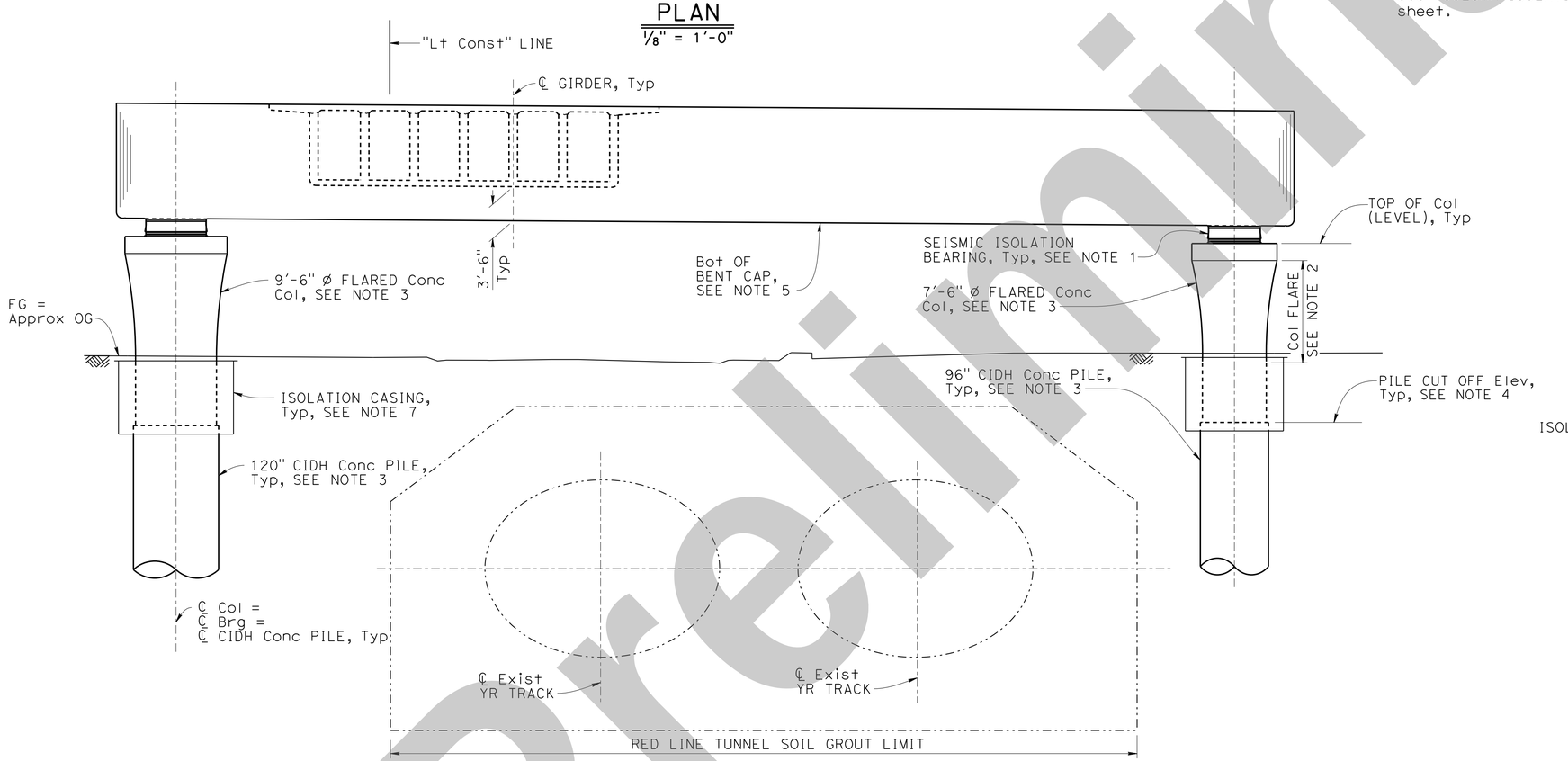

ELEVATION
⅛" = 1'-0"

NOTES:

1. For seismic isolation bearing details, see "SEISMIC ISOLATION BEARING DETAILS No. 1" thru "SEISMIC ISOLATION BEARING DETAILS No. 3" sheets.
2. For column flare geometry, see "COLUMN FLARE DETAILS No. 4" and "COLUMN FLARE DETAILS No. 5" sheets.
3. For column and CIDH pile details, see "96 INCH CIDH PILE DETAILS" and "120 INCH CIDH PILE DETAILS" sheets.
4. For pile cutoff elevations, see "FOUNDATION DATA" sheet.
5. Bottom of bent cap is a constant offset from the top of deck.
6. For bent cap reinforcement details, see "BENT DETAILS No. 3" and "BENT DETAILS No. 4" sheets.
7. For isolation casing length and details, see "COLUMN ISOLATION CASING DETAILS" sheet.

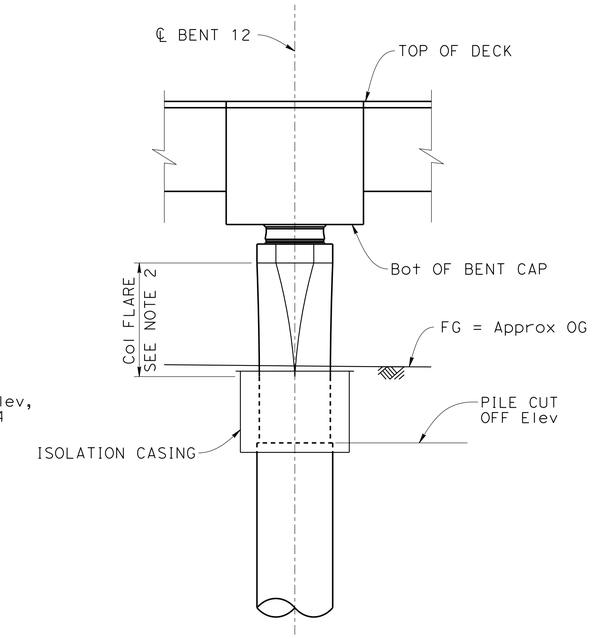

RIGHT END ELEVATION
⅛" = 1'-0"

NOTE:
THE CONTRACTOR MUST VERIFY ALL CONTROLLING FIELD DIMENSIONS BEFORE ORDERING OR FABRICATING ANY MATERIAL.

Dist	COUNTY	ROUTE	POST MILES TOTAL PROJECT	SHEET No.	TOTAL SHEETS
07	LA	105, 101	17.0/17.3, 0.4/0.7	X	X

REGISTERED CIVIL ENGINEER — DATE X

PLANS APPROVAL DATE X

Montserrat Martin
No. C64771
Exp. 6/30/25
CIVIL
REGISTERED PROFESSIONAL ENGINEER
STATE OF CALIFORNIA

THE STATE OF CALIFORNIA OR ITS OFFICERS OR AGENTS SHALL NOT BE RESPONSIBLE FOR THE ACCURACY OR COMPLETENESS OF SCANNED COPIES OF THIS PLAN SHEET.

HDR, INC
3220 EL CAMINO REAL
SUITE 200
IRVINE, CA 92602

LA METRO
ONE GATEWAY PLAZA
LOS ANGELES, CA 90012

INTERMEDIATE SUBMITTAL - 02/21/25

X
DESIGN OVERSIGHT
X
SIGN OFF DATE

	BY	CHECKED
DESIGN	A. Banesh	X
DETAILS	R. Ewing	X
QUANTITIES	X	X

PREPARED FOR THE STATE OF CALIFORNIA DEPARTMENT OF TRANSPORTATION

Daniel Weddell
PROJECT ENGINEER

BRIDGE No. X
POST MILE X

LAUS VIADUCT OVER US-101
BENT 12 LAYOUT

STRUCTURES DESIGN DETAIL SHEET (ENGLISH) (REVISION 8/16/2021)

DATE PLOTTED => 2/20/2025
FILE => Bent 12 Layout
TIME PLOTTED => 6:37:44 PM
USERNAME => ABANESH
ORIGINAL SCALE IN INCHES FOR REDUCED PLANS 0 1 2 3

PROJECT NUMBER & PHASE: 07150001191
COUNTY/ROUTE: LA/101
CONTRACT No.: 07-220001

DISREGARD PRINTS BEARING EARLIER REVISION DATES →

REVISION DATES	SHEET	OF
2/21/25	44	171

SHEET NO 61

Preliminary

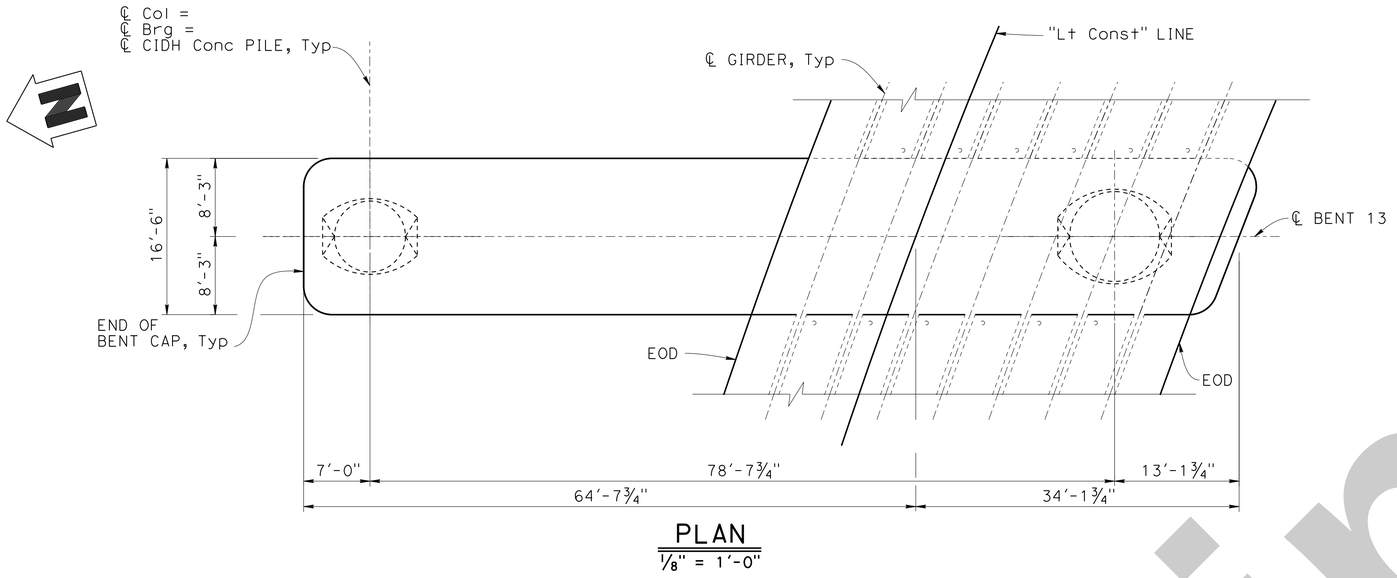

PLAN
1/8" = 1'-0"

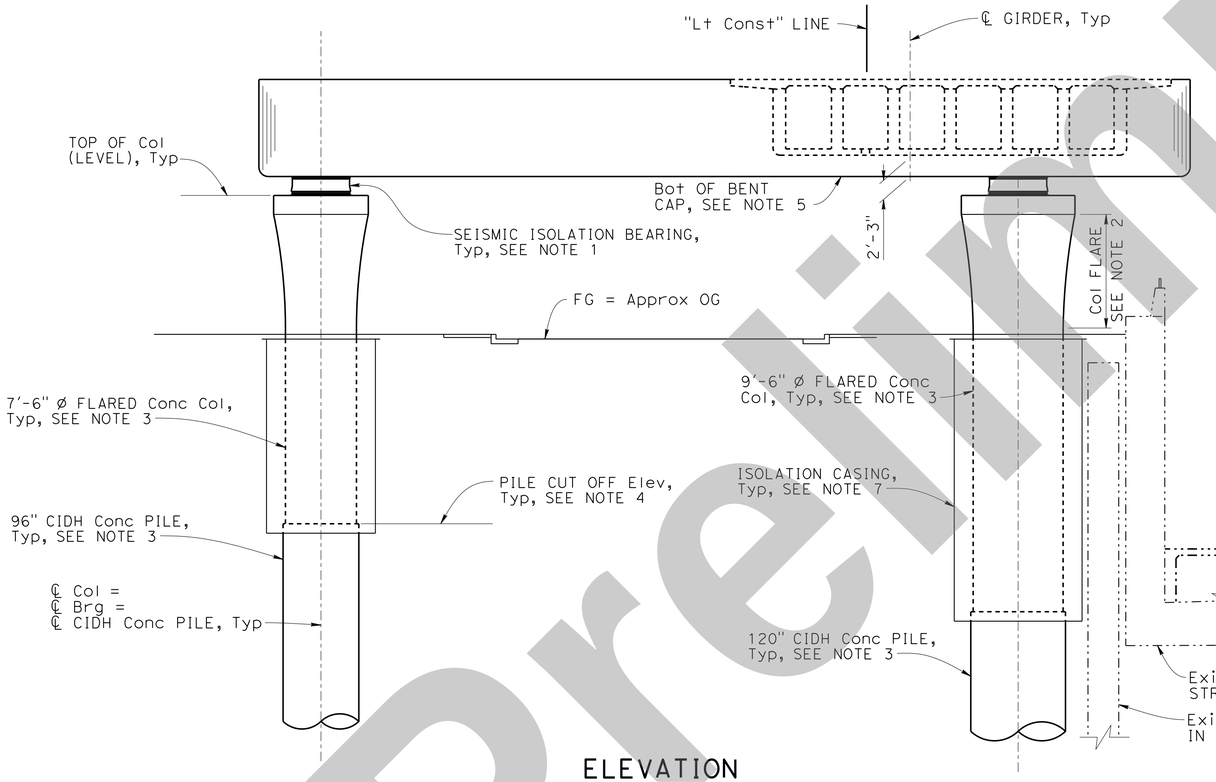

ELEVATION
1/8" = 1'-0"

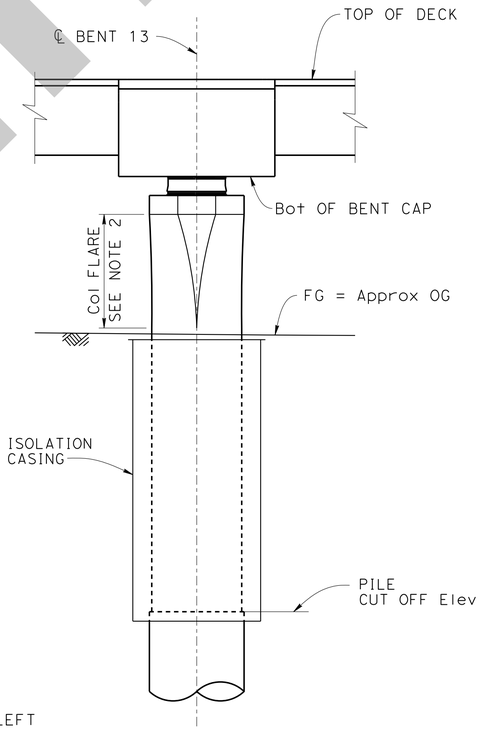

RIGHT END ELEVATION
1/8" = 1'-0"

NOTE:
THE CONTRACTOR MUST VERIFY ALL CONTROLLING FIELD DIMENSIONS BEFORE ORDERING OR FABRICATING ANY MATERIAL.

Dist	COUNTY	ROUTE	POST MILES TOTAL PROJECT	SHEET No.	TOTAL SHEETS
07	LA	105, 101	17.0/17.3, 0.4/0.7	X	X

X
REGISTERED CIVIL ENGINEER — DATE

X
PLANS APPROVAL DATE

Montserrat Martin
No. C64771
Exp. 6/30/25
CIVIL
REGISTERED PROFESSIONAL ENGINEER
STATE OF CALIFORNIA

THE STATE OF CALIFORNIA OR ITS OFFICERS OR AGENTS SHALL NOT BE RESPONSIBLE FOR THE ACCURACY OR COMPLETENESS OF SCANNED COPIES OF THIS PLAN SHEET.

HDR, INC
3220 EL CAMINO REAL
SUITE 200
IRVINE, CA 92602

LA METRO
ONE GATEWAY PLAZA
LOS ANGELES, CA 90012

NOTES:

1. For seismic isolation bearing details, see "SEISMIC ISOLATION BEARING DETAILS No. 1" thru "SEISMIC ISOLATION BEARING DETAILS No. 3" sheets.
2. For column flare geometry, see "COLUMN FLARE DETAILS No. 4" and "COLUMN FLARE DETAILS No. 5" sheets.
3. For column and CIDH pile details, see "96 INCH CIDH PILE DETAILS" and "120 INCH CIDH PILE DETAILS" sheets.
4. For pile cutoff elevations, see "FOUNDATION DATA" sheet.
5. Bottom of bent cap is a constant offset from the top of deck.
6. For bent cap reinforcement details, see "BENT DETAILS No. 5" and "BENT DETAILS No. 6" sheets.
7. For isolation casing length and details, see "COLUMN ISOLATION CASING DETAILS" sheet.

INTERMEDIATE SUBMITTAL - 02/21/25

Preliminary

X
DESIGN OVERSIGHT

X
SIGN OFF DATE

	BY	CHECKED
DESIGN	A. Banesh	X
DETAILS	R. Ewing	X
QUANTITIES	X	X

PREPARED FOR THE STATE OF CALIFORNIA DEPARTMENT OF TRANSPORTATION

Daniel Weddell
PROJECT ENGINEER

BRIDGE No. X
POST MILE X

LAUS VIADUCT OVER US-101
BENT 13 LAYOUT

STRUCTURES DESIGN DETAIL SHEET (ENGLISH) (REVISION 8/16/2021)

DATE PLOTTED => 2/20/2025 TIME PLOTTED => 6:37:48 PM
FILE => Bent 13 Layout USERNAME => ABANESH

ORIGINAL SCALE IN INCHES FOR REDUCED PLANS 0 1 2 3

PROJECT NUMBER & PHASE: 07150001191
COUNTY/ROUTE: LA/101
CONTRACT No.: 07-220001

DISREGARD PRINTS BEARING EARLIER REVISION DATES →

REVISION DATES				SHEET	OF
2/21/25				45	171

SHEET NO 62

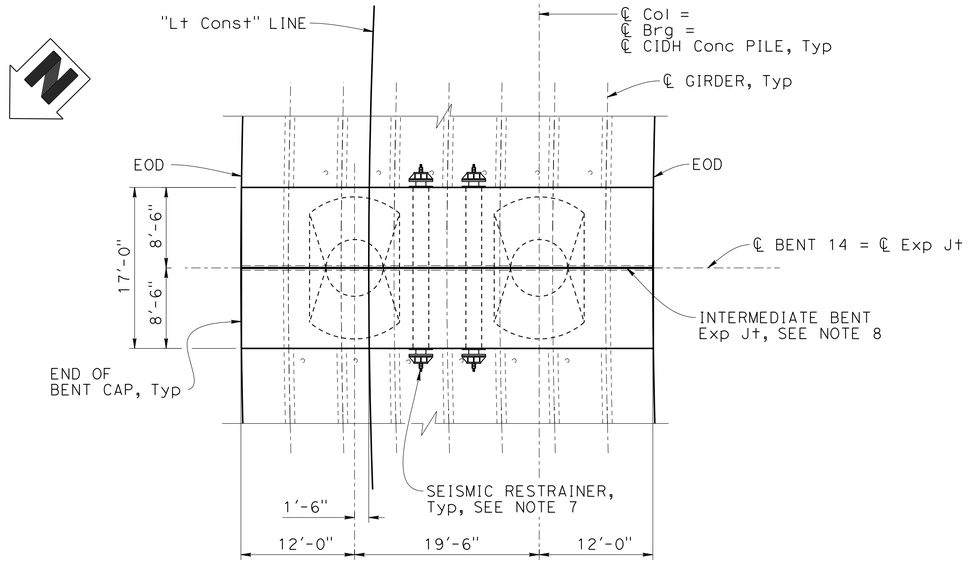

PLAN
1/8" = 1'-0"

NOTES:

1. For seismic isolation bearing details, see "SEISMIC ISOLATION BEARING DETAILS No. 1" thru "SEISMIC ISOLATION BEARING DETAILS No. 3" sheets.
2. For column flare geometry, see "COLUMN FLARE DETAILS No. 2" sheet.
3. For column and CIDH pile details, see "84 INCH CIDH PILE DETAILS" sheet.
4. For pile cutoff elevations, see "FOUNDATION DATA" sheet.
5. Bottom of bent cap is a constant offset from the top of deck.
6. For bent cap reinforcement details, see "BENT DETAILS No. 7" sheet.
7. For seismic restrainer details, see "SEISMIC RESTRAINER DETAILS No. 1" and "SEISMIC RESTRAINER DETAILS No. 2" sheets.
8. For intermediate bent expansion joint details, see "INTERMEDIATE BENT EXPANSION JOINT" sheet.
9. For isolation casing length and details, see "COLUMN ISOLATION CASING DETAILS" sheet.

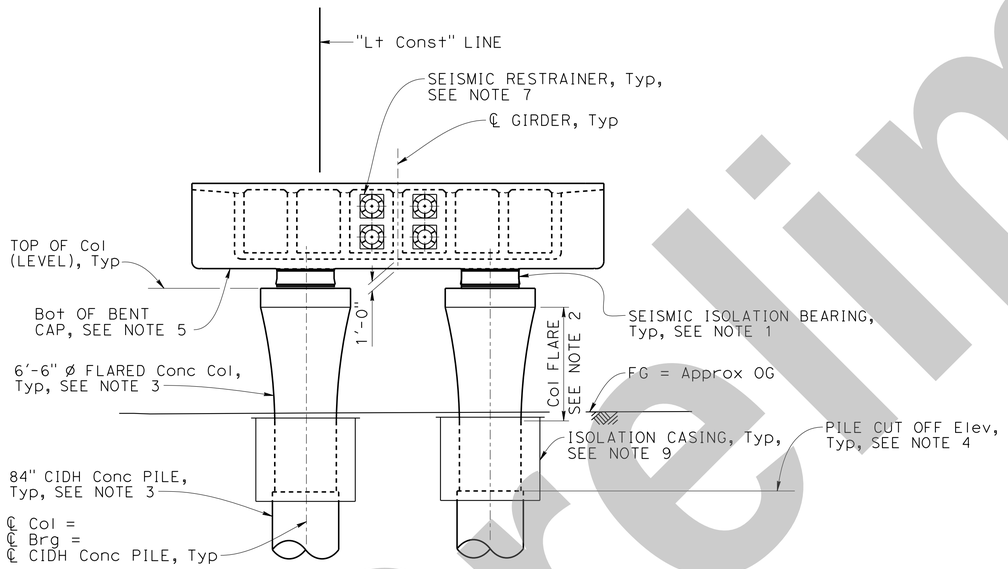

ELEVATION
1/8" = 1'-0"

Note:
Back span shown, ahead span similar

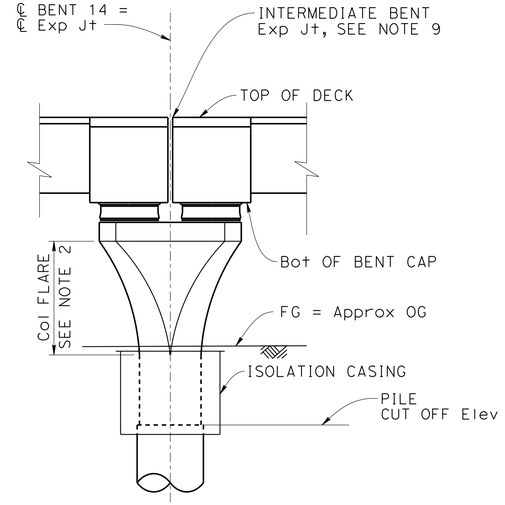

RIGHT END ELEVATION
1/8" = 1'-0"

NOTE:
THE CONTRACTOR MUST VERIFY ALL CONTROLLING FIELD DIMENSIONS BEFORE ORDERING OR FABRICATING ANY MATERIAL.

Dist	COUNTY	ROUTE	POST MILES TOTAL PROJECT	SHEET No.	TOTAL SHEETS
07	LA	105, 101	17.0/17.3, 0.4/0.7	X	X

X
REGISTERED CIVIL ENGINEER — DATE

X
PLANS APPROVAL DATE

REGISTERED PROFESSIONAL ENGINEER — Montserrat Martin — No. C64771 — Exp. 6/30/25 — CIVIL — STATE OF CALIFORNIA

THE STATE OF CALIFORNIA OR ITS OFFICERS OR AGENTS SHALL NOT BE RESPONSIBLE FOR THE ACCURACY OR COMPLETENESS OF SCANNED COPIES OF THIS PLAN SHEET.

HDR, INC
3220 EL CAMINO REAL
SUITE 200
IRVINE, CA 92602

LA METRO
ONE GATEWAY PLAZA
LOS ANGELES, CA 90012

INTERMEDIATE SUBMITTAL - 02/21/25

Preliminary

X
DESIGN OVERSIGHT

X
SIGN OFF DATE

	BY	CHECKED
DESIGN	A. Banesh	X
DETAILS	R. Ewing	X
QUANTITIES	X	X

PREPARED FOR THE
STATE OF CALIFORNIA
DEPARTMENT OF TRANSPORTATION

Daniel Weddell
PROJECT ENGINEER

BRIDGE No. X
POST MILE X

LAUS VIADUCT OVER US-101
BENT 14 LAYOUT

STRUCTURES DESIGN DETAIL SHEET (ENGLISH) (REVISION 8/16/2021)

DATE PLOTTED => 2/20/2025 TIME PLOTTED => 6:37:53 PM
FILE => Bent 14 Layout USERNAME => ABANESH

ORIGINAL SCALE IN INCHES FOR REDUCED PLANS 0 1 2 3

PROJECT NUMBER & PHASE: 07150001191
COUNTY/ROUTE: LA/101
CONTRACT No.: 07-220001

DISREGARD PRINTS BEARING EARLIER REVISION DATES →

REVISION DATES	SHEET	OF
2/21/25	46	171

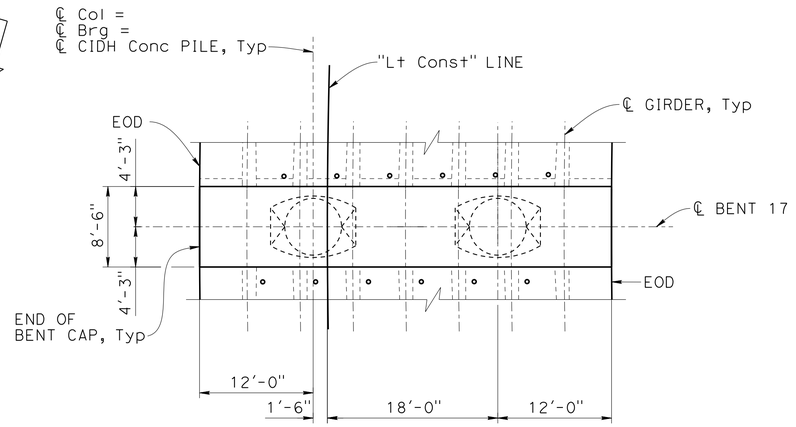

PLAN
1/8" = 1'-0"

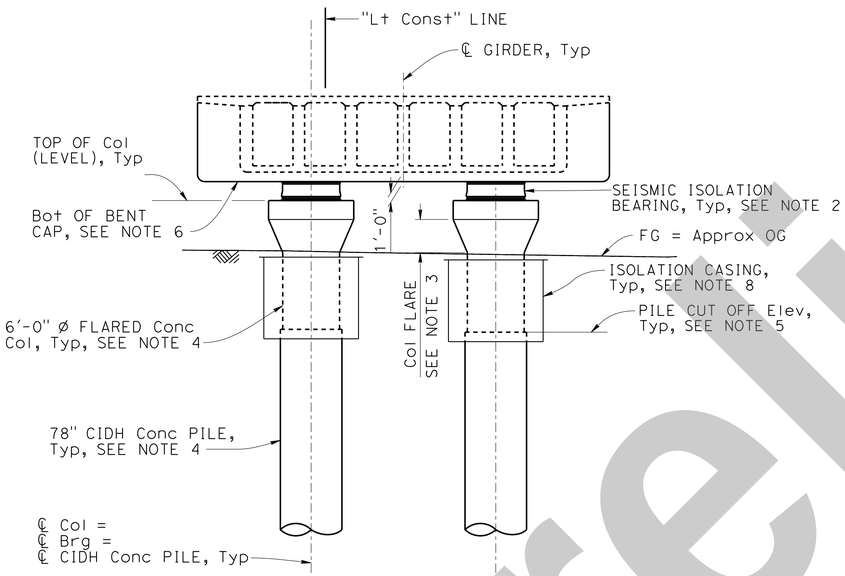

NOTE:
Back span shown, ahead span similar.

ELEVATION
1/8" = 1'-0"

NOTES:

1. Bent 17 shown, Bents 15 and 16 similar except as noted.
2. For seismic isolation bearing details, see "SEISMIC ISOLATION BEARING DETAILS No. 1" thru "SEISMIC ISOLATION BEARING DETAILS No. 3" sheets.
3. For column flare geometry, see "COLUMN FLARE DETAILS No. 1" sheet.
4. For column and CIDH pile details, see "78 INCH CIDH PILE DETAILS" sheet.
5. For pile cutoff elevations, see "FOUNDATION DATA" sheet.
6. Bottom of bent cap is a constant offset from the top of deck.
7. For bent cap reinforcement details, see "BENT DETAILS No. 1" and "BENT DETAILS No. 2" sheets.
8. For isolation casing length and details, see "COLUMN ISOLATION CASING DETAILS" sheet.

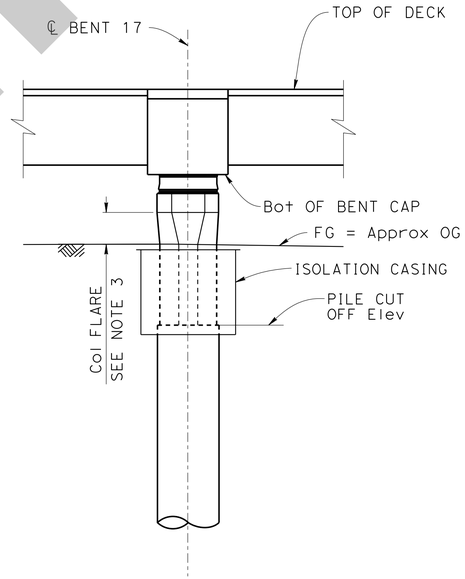

RIGHT END ELEVATION
1/8" = 1'-0"

NOTE:
THE CONTRACTOR MUST VERIFY ALL CONTROLLING FIELD DIMENSIONS BEFORE ORDERING OR FABRICATING ANY MATERIAL.

Dist	COUNTY	ROUTE	POST MILES TOTAL PROJECT	SHEET No.	TOTAL SHEETS
07	LA	105, 101	17.0/17.3, 0.4/0.7	X	X

X
REGISTERED CIVIL ENGINEER — DATE

X
PLANS APPROVAL DATE

REGISTERED PROFESSIONAL ENGINEER — Montserrat Martin — No. C64771 — Exp. 6/30/25 — CIVIL — STATE OF CALIFORNIA

THE STATE OF CALIFORNIA OR ITS OFFICERS OR AGENTS SHALL NOT BE RESPONSIBLE FOR THE ACCURACY OR COMPLETENESS OF SCANNED COPIES OF THIS PLAN SHEET.

HDR, INC
3220 EL CAMINO REAL
SUITE 200
IRVINE, CA 92602

LA METRO
ONE GATEWAY PLAZA
LOS ANGELES, CA 90012

INTERMEDIATE SUBMITTAL - 02/21/25

X
DESIGN OVERSIGHT

X
SIGN OFF DATE

	BY	CHECKED
DESIGN	A. Banesh	X
DETAILS	R. Ewing	X
QUANTITIES	X	X

PREPARED FOR THE STATE OF CALIFORNIA DEPARTMENT OF TRANSPORTATION

Daniel Weddell
PROJECT ENGINEER

BRIDGE No. X
POST MILE X

LAUS VIADUCT OVER US-101
BENTS 15, 16 AND 17 LAYOUT

STRUCTURES DESIGN DETAIL SHEET (ENGLISH) (REVISION 8/16/2021)

DATE PLOTTED => 2/20/2025 TIME PLOTTED => 6:37:58 PM
FILE => Bents 15, 16 and 17 Layou USERNAME => ABANESH

ORIGINAL SCALE IN INCHES FOR REDUCED PLANS 0 1 2 3

PROJECT NUMBER & PHASE: 07150001191
COUNTY/ROUTE: LA/101
CONTRACT No.: 07-220001

DISREGARD PRINTS BEARING EARLIER REVISION DATES →

REVISION DATES	SHEET	OF
2/21/25	47	171

SHEET NO 64

Preliminary

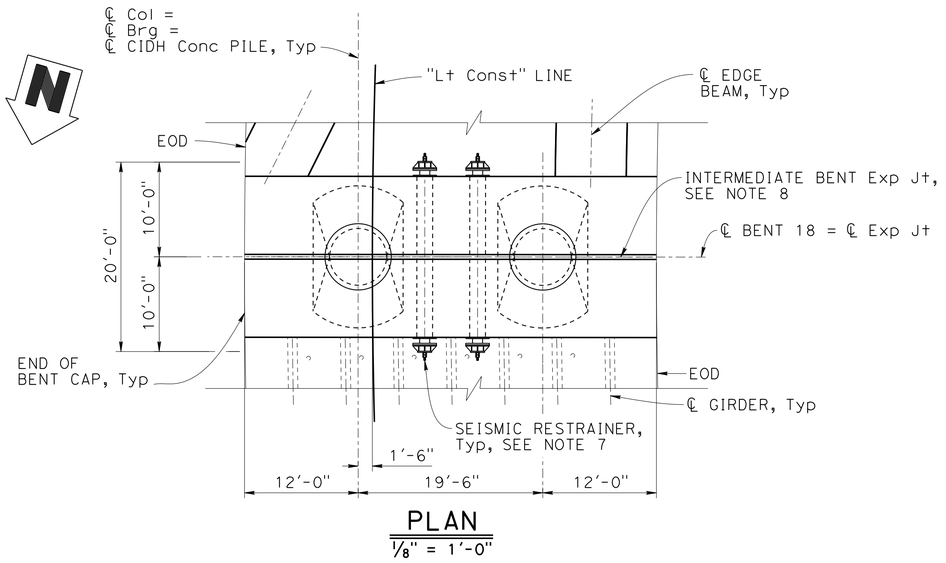

PLAN

1/8" = 1'-0"

NOTES:

1. For seismic isolation bearing details, see "SEISMIC ISOLATION BEARING DETAILS No. 1" thru "SEISMIC ISOLATION BEARING DETAILS No. 3" sheets.
2. For column flare geometry, see "COLUMN FLARE DETAILS No. 2" sheet.
3. For column and CIDH pile details, see "84 INCH CIDH PILE DETAILS" sheet.
4. For pile cutoff elevations, see "FOUNDATION DATA" sheet.
5. Bottom of bent cap is a constant offset from the top of deck.
6. For bent cap reinforcement details, see "BENT DETAILS No. 7" sheet.
7. For seismic restrainer details, see "SEISMIC RESTRAINER DETAILS No. 1" and "SEISMIC RESTRAINER DETAILS No. 2" sheets.
8. For intermediate bent expansion joint details, see "INTERMEDIATE BENT EXPANSION JOINT" sheet.

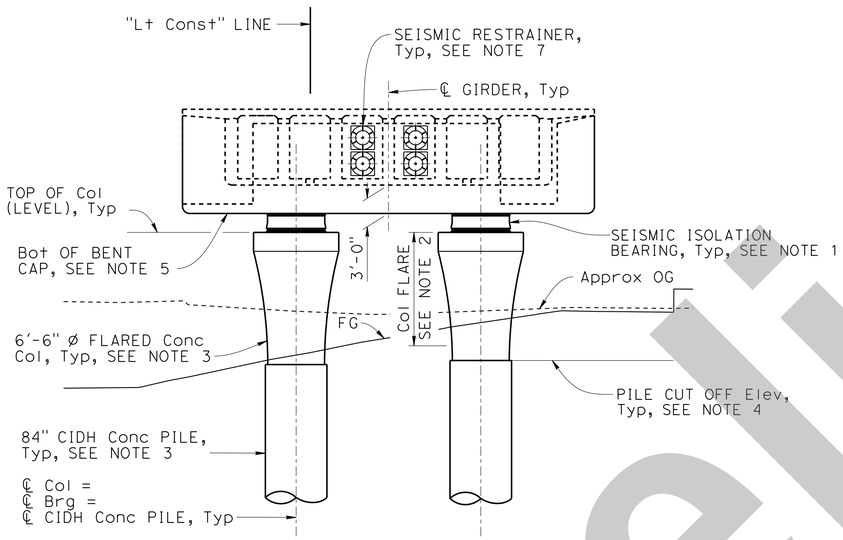

ELEVATION

1/8" = 1'-0"

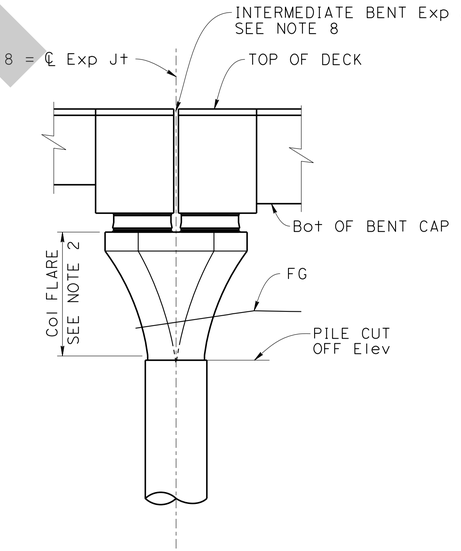

RIGHT END ELEVATION

1/8" = 1'-0"

NOTE:
THE CONTRACTOR MUST VERIFY ALL CONTROLLING FIELD DIMENSIONS BEFORE ORDERING OR FABRICATING ANY MATERIAL.

Dist	COUNTY	ROUTE	POST MILES TOTAL PROJECT	SHEET No.	TOTAL SHEETS
07	LA	105, 101	17.0/17.3, 0.4/0.7	X	X

X
REGISTERED CIVIL ENGINEER — DATE

X
PLANS APPROVAL DATE

Montserrat Martin
No. C64771
Exp. 6/30/25
CIVIL
REGISTERED PROFESSIONAL ENGINEER
STATE OF CALIFORNIA

THE STATE OF CALIFORNIA OR ITS OFFICERS OR AGENTS SHALL NOT BE RESPONSIBLE FOR THE ACCURACY OR COMPLETENESS OF SCANNED COPIES OF THIS PLAN SHEET.

HDR, INC
3220 EL CAMINO REAL
SUITE 200
IRVINE, CA 92602

LA METRO
ONE GATEWAY PLAZA
LOS ANGELES, CA 90012

INTERMEDIATE SUBMITTAL - 02/21/25

X
DESIGN OVERSIGHT

X
SIGN OFF DATE

	BY	CHECKED
DESIGN	A. Banesh	X
DETAILS	R. Ewing	X
QUANTITIES	X	X

PREPARED FOR THE STATE OF CALIFORNIA DEPARTMENT OF TRANSPORTATION

Daniel Weddell
PROJECT ENGINEER

BRIDGE No. X
POST MILE X

LAUS VIADUCT OVER US-101
BENT 18 LAYOUT

STRUCTURES DESIGN DETAIL SHEET (ENGLISH) (REVISION 8/16/2021)

DATE PLOTTED => 2/20/2025
FILE => Bent 18 Layout
TIME PLOTTED => 6:38:05 PM
USERNAME => ABANESH

ORIGINAL SCALE IN INCHES FOR REDUCED PLANS 0 1 2 3

PROJECT NUMBER & PHASE: 07150001191
COUNTY/ROUTE: LA/101
CONTRACT No.: 07-220001

DISREGARD PRINTS BEARING EARLIER REVISION DATES →

REVISION DATES				SHEET	OF
2/21/25				48	171

SHEET NO 65

Preliminary

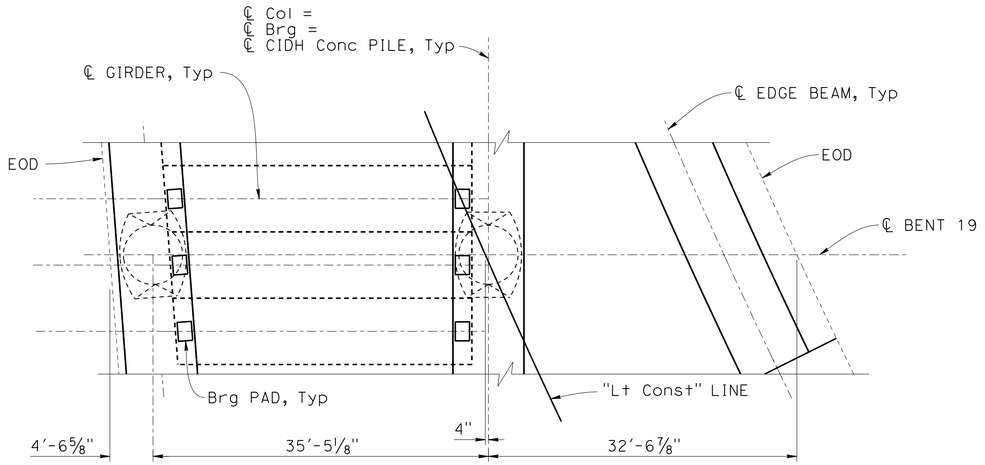

PLAN
⅛" = 1'-0"

NOTES:

1. For seismic isolation bearing details, see "SEISMIC ISOLATION BEARING DETAILS No. 1" thru "SEISMIC ISOLATION BEARING DETAILS No. 3" sheets.
2. For column flare geometry, see "COLUMN FLARE DETAILS No. 1" sheet.
3. For column and CIDH pile details, see "78 INCH CIDH PILE DETAILS" sheet.
4. For pile cutoff elevations, see "FOUNDATION DATA" sheet.
5. For edge beam reinforcement details, see "GIRDER DETAILS No. 9" thru "GIRDER DETAILS No. 13" sheets.

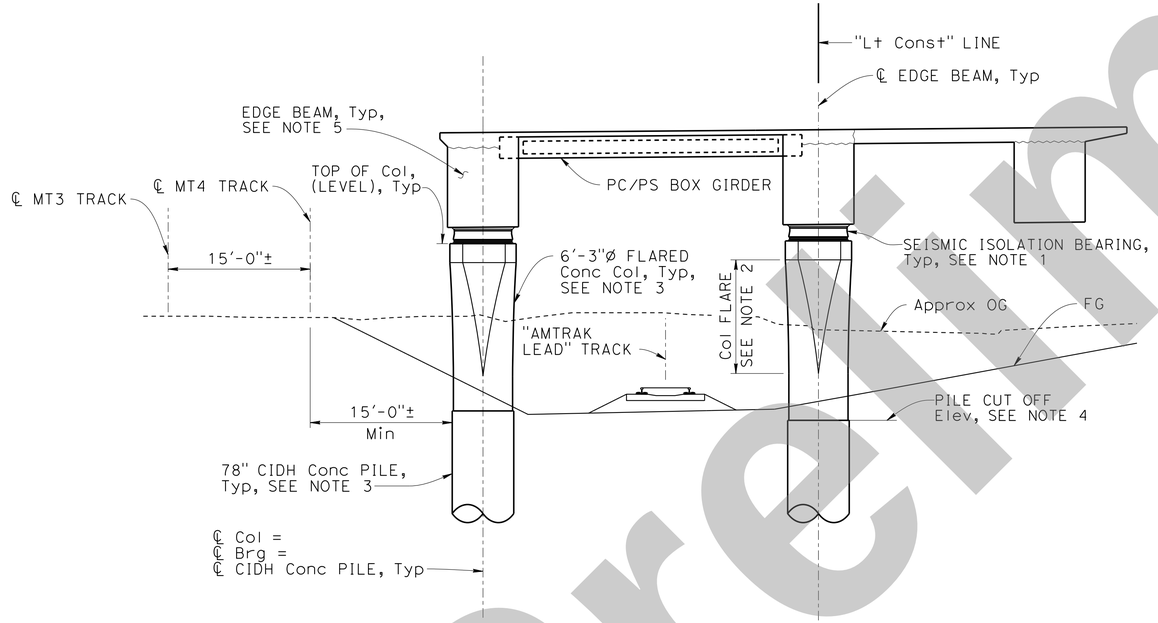

ELEVATION
⅛" = 1'-0"

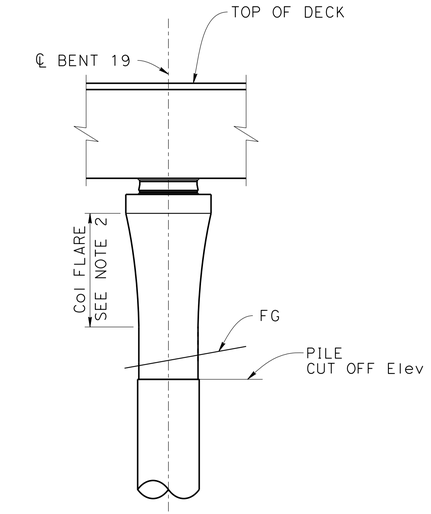

RIGHT END ELEVATION
⅛" = 1'-0"

NOTE:
THE CONTRACTOR MUST VERIFY ALL CONTROLLING FIELD DIMENSIONS BEFORE ORDERING OR FABRICATING ANY MATERIAL.

Dist	COUNTY	ROUTE	POST MILES TOTAL PROJECT	SHEET No.	TOTAL SHEETS
07	LA	105, 101	17.0/17.3, 0.4/0.7	X	X

X
REGISTERED CIVIL ENGINEER — DATE

X
PLANS APPROVAL DATE

Montserrat Martin
No. C64771
Exp. 6/30/25
CIVIL
REGISTERED PROFESSIONAL ENGINEER
STATE OF CALIFORNIA

THE STATE OF CALIFORNIA OR ITS OFFICERS OR AGENTS SHALL NOT BE RESPONSIBLE FOR THE ACCURACY OR COMPLETENESS OF SCANNED COPIES OF THIS PLAN SHEET.

HDR, INC
3220 EL CAMINO REAL
SUITE 200
IRVINE, CA 92602

LA METRO
ONE GATEWAY PLAZA
LOS ANGELES, CA 90012

INTERMEDIATE SUBMITTAL - 02/21/25

Preliminary

X
DESIGN OVERSIGHT
X
SIGN OFF DATE

	BY	CHECKED
DESIGN	A. Banesh	X
DETAILS	R. Ewing	X
QUANTITIES	X	X

PREPARED FOR THE STATE OF CALIFORNIA DEPARTMENT OF TRANSPORTATION

Daniel Weddell
PROJECT ENGINEER

BRIDGE No. X
POST MILE X

LAUS VIADUCT OVER US-101
BENT 19 LAYOUT

STRUCTURES DESIGN DETAIL SHEET (ENGLISH) (REVISION 8/16/2021)

DATE PLOTTED => 2/20/2025 TIME PLOTTED => 6:38:10 PM
FILE => Bent 19 Layout USERNAME => ABANESH

ORIGINAL SCALE IN INCHES FOR REDUCED PLANS 0 1 2 3

PROJECT NUMBER & PHASE: 07150001191
COUNTY/ROUTE: LA/101
CONTRACT No.: 07-220001

DISREGARD PRINTS BEARING EARLIER REVISION DATES →

REVISION DATES	SHEET	OF
2/21/25	49	171

Dist	COUNTY	ROUTE	POST MILES TOTAL PROJECT	SHEET No.	TOTAL SHEETS
07	LA	105, 101	17.0/17.3, 0.4/0.7	X	X

X
REGISTERED CIVIL ENGINEER — DATE

X
PLANS APPROVAL DATE

REGISTERED PROFESSIONAL ENGINEER — Montserrat Martin — No. C64771 — Exp. 6/30/25 — CIVIL — STATE OF CALIFORNIA

THE STATE OF CALIFORNIA OR ITS OFFICERS OR AGENTS SHALL NOT BE RESPONSIBLE FOR THE ACCURACY OR COMPLETENESS OF SCANNED COPIES OF THIS PLAN SHEET.

HDR, INC
3220 EL CAMINO REAL
SUITE 200
IRVINE, CA 92602

LA METRO
ONE GATEWAY PLAZA
LOS ANGELES, CA 90012

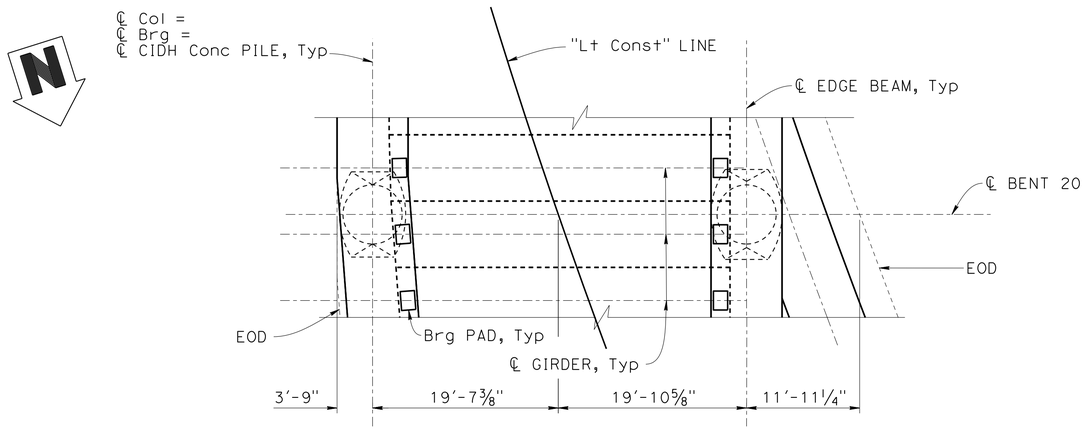

PLAN
⅛" = 1'-0"

NOTES:

1. For seismic isolation bearing details, see "SEISMIC ISOLATION BEARING DETAILS No. 1" thru "SEISMIC ISOLATION BEARING DETAILS No. 3" sheets.
2. For column flare geometry, see "COLUMN FLARE DETAILS No. 1" sheet.
3. For column and CIDH pile details, see "78 INCH CIDH PILE DETAILS" sheet.
4. For pile cutoff elevations, see "FOUNDATION DATA" sheet.
5. For edge beam reinforcement details, see "GIRDER DETAILS No. 9" thru "GIRDER DETAILS No. 13" sheets.

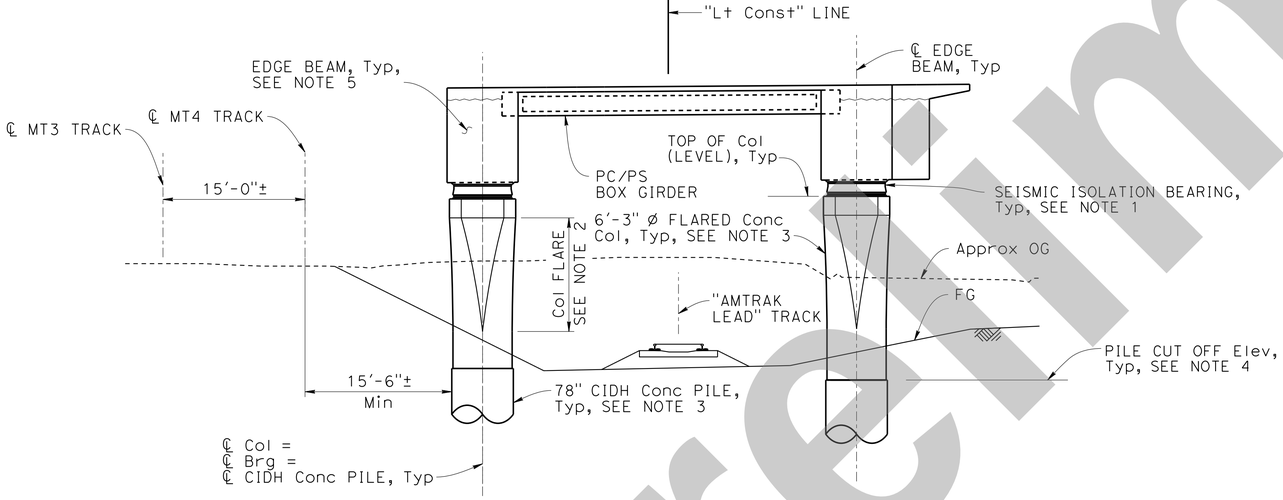

ELEVATION
⅛" = 1'-0"

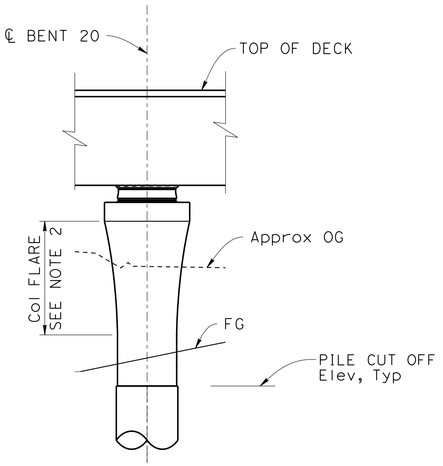

RIGHT END ELEVATION
⅛" = 1'-0"

NOTE:
THE CONTRACTOR MUST VERIFY ALL CONTROLLING FIELD DIMENSIONS BEFORE ORDERING OR FABRICATING ANY MATERIAL.

INTERMEDIATE SUBMITTAL - 02/21/25

Preliminary

X
DESIGN OVERSIGHT

X
SIGN OFF DATE

	BY	CHECKED
DESIGN	A. Banesh	X
DETAILS	R. Ewing	X
QUANTITIES	X	X

PREPARED FOR THE STATE OF CALIFORNIA DEPARTMENT OF TRANSPORTATION

Daniel Weddell
PROJECT ENGINEER

BRIDGE No. X
POST MILE X

LAUS VIADUCT OVER US-101
BENT 20 LAYOUT

STRUCTURES DESIGN DETAIL SHEET (ENGLISH) (REVISION 8/16/2021)

DATE PLOTTED => 2/20/2025 TIME PLOTTED => 6:38:15 PM
FILE => Bent 20 Layout USERNAME => ABANESH

ORIGINAL SCALE IN INCHES FOR REDUCED PLANS 0 1 2 3

PROJECT NUMBER & PHASE: 07150001191
COUNTY/ROUTE: LA/101
CONTRACT No.: 07-220001

DISREGARD PRINTS BEARING EARLIER REVISION DATES →

REVISION DATES				SHEET	OF
2/21/25				50	171

SHEET NO 67

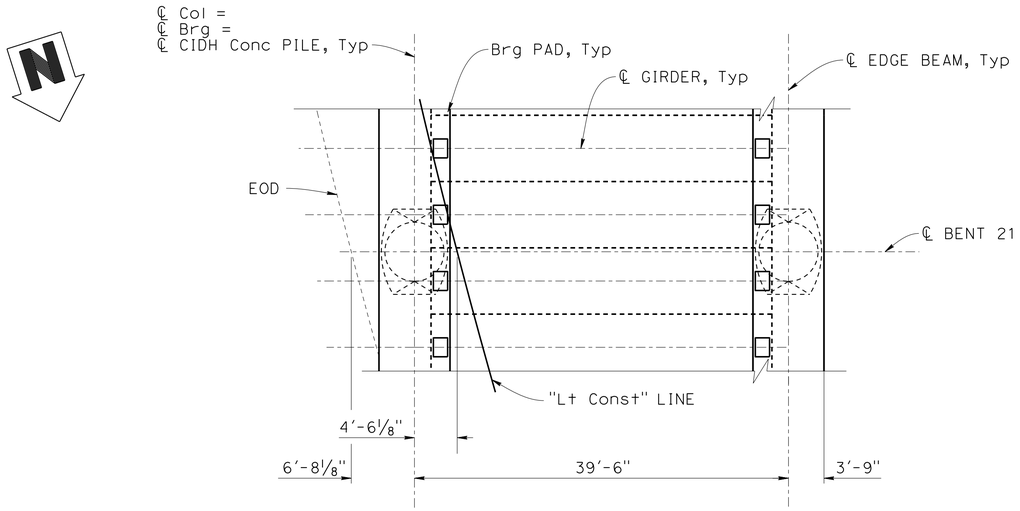

PLAN
1/8" = 1'-0"

NOTES:

1. For seismic isolation bearing details, see "SEISMIC ISOLATION BEARING DETAILS No. 1" thru "SEISMIC ISOLATION BEARING DETAILS No. 3" sheets.
2. For column flare geometry, see "COLUMN FLARE DETAILS No. 1" sheet.
3. For column and CIDH pile details, see "78 INCH CIDH PILE DETAILS" sheet.
4. For pile cutoff elevations, see "FOUNDATION DATA" sheet.
5. For edge beam reinforcement details, see "GIRDER DETAILS No. 9" thru "GIRDER DETAILS No. 13" sheets.

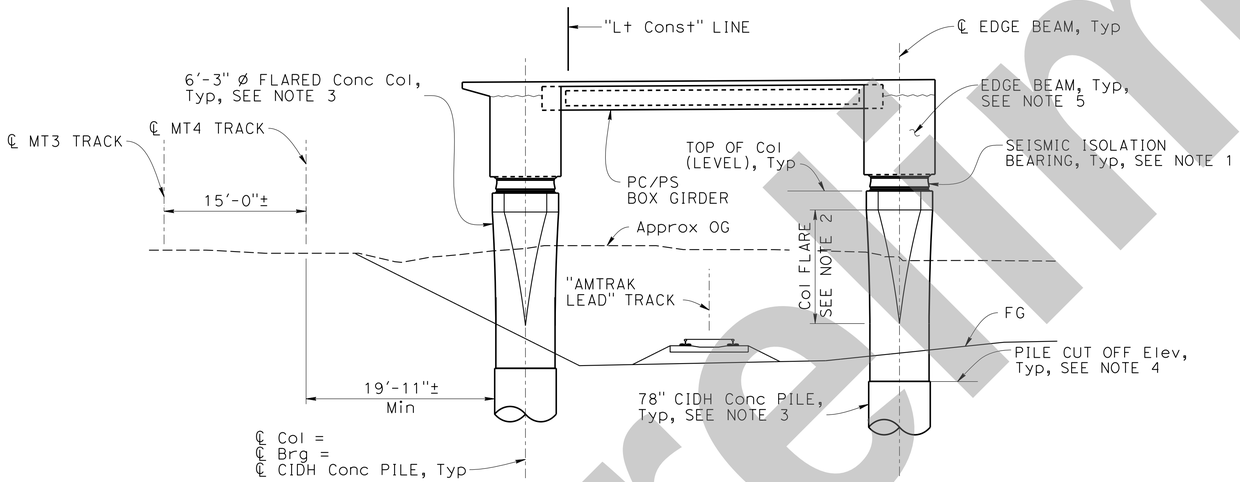

ELEVATION
1/8" = 1'-0"

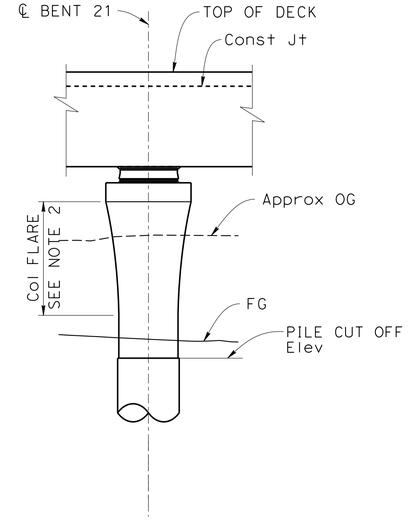

RIGHT END ELEVATION
1/8" = 1'-0"

NOTE:
THE CONTRACTOR MUST VERIFY ALL CONTROLLING FIELD DIMENSIONS BEFORE ORDERING OR FABRICATING ANY MATERIAL.

Dist	COUNTY	ROUTE	POST MILES TOTAL PROJECT	SHEET No.	TOTAL SHEETS
07	LA	105, 101	17.0/17.3, 0.4/0.7	X	X

REGISTERED CIVIL ENGINEER — DATE: X

PLANS APPROVAL DATE: X

REGISTERED PROFESSIONAL ENGINEER — Montserrat Martin — No. C64771 — Exp. 6/30/25 — CIVIL — STATE OF CALIFORNIA

THE STATE OF CALIFORNIA OR ITS OFFICERS OR AGENTS SHALL NOT BE RESPONSIBLE FOR THE ACCURACY OR COMPLETENESS OF SCANNED COPIES OF THIS PLAN SHEET.

HDR, INC
3220 EL CAMINO REAL
SUITE 200
IRVINE, CA 92602

LA METRO
ONE GATEWAY PLAZA
LOS ANGELES, CA 90012

INTERMEDIATE SUBMITTAL - 02/21/25

Preliminary

X
DESIGN OVERSIGHT
X
SIGN OFF DATE

	BY	CHECKED
DESIGN	A. Banesh	X
DETAILS	R. Ewing	X
QUANTITIES	X	X

PREPARED FOR THE STATE OF CALIFORNIA DEPARTMENT OF TRANSPORTATION

Daniel Weddell
PROJECT ENGINEER

BRIDGE No. X
POST MILE X

LAUS VIADUCT OVER US-101
BENT 21 LAYOUT

STRUCTURES DESIGN DETAIL SHEET (ENGLISH) (REVISION 8/16/2021)

DATE PLOTTED => 2/20/2025 TIME PLOTTED => 6:38:20 PM
FILE => Bent 21 Layout USERNAME => ABANESH

ORIGINAL SCALE IN INCHES FOR REDUCED PLANS 0 1 2 3

PROJECT NUMBER & PHASE: 07150001191
COUNTY/ROUTE: LA/101
CONTRACT No.: 07-220001

DISREGARD PRINTS BEARING EARLIER REVISION DATES →

REVISION DATES	SHEET	OF
2/21/25	51	171

Dist	COUNTY	ROUTE	POST MILES TOTAL PROJECT	SHEET No.	TOTAL SHEETS
07	LA	105, 101	17.0/17.3, 0.4/0.7	X	X

REGISTERED CIVIL ENGINEER — X DATE

X
PLANS APPROVAL DATE

REGISTERED PROFESSIONAL ENGINEER — Montserrat Martin — No. C64771 — Exp. 6/30/25 — CIVIL — STATE OF CALIFORNIA

THE STATE OF CALIFORNIA OR ITS OFFICERS OR AGENTS SHALL NOT BE RESPONSIBLE FOR THE ACCURACY OR COMPLETENESS OF SCANNED COPIES OF THIS PLAN SHEET.

HDR, INC
3220 EL CAMINO REAL
SUITE 200
IRVINE, CA 92602

LA METRO
ONE GATEWAY PLAZA
LOS ANGELES, CA 90012

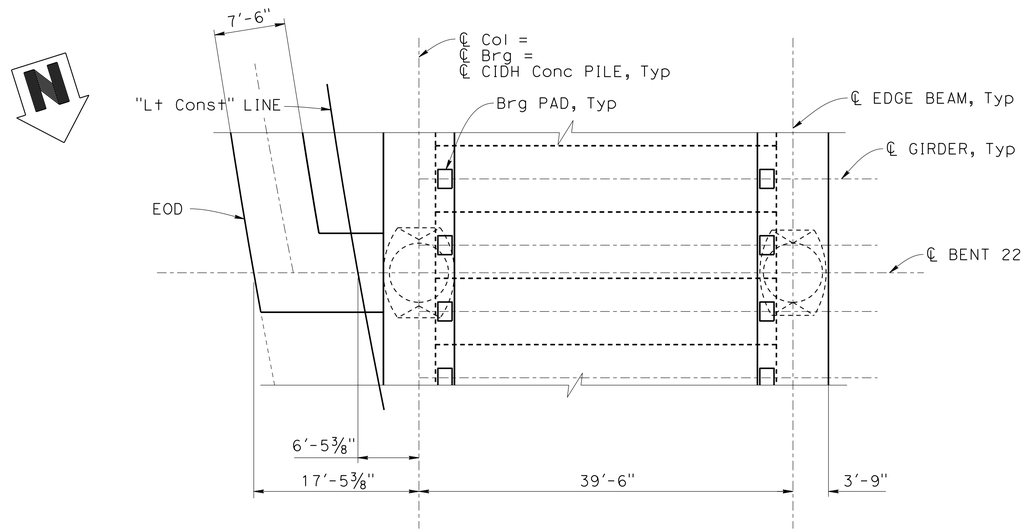

PLAN
⅛" = 1'-0"

NOTES:

1. For seismic isolation bearing details, see "SEISMIC ISOLATION BEARING DETAILS No. 1" thru "SEISMIC ISOLATION BEARING DETAILS No. 3" sheets.
2. For column flare geometry, see "COLUMN FLARE DETAILS No. 1" sheet.
3. For column and CIDH pile details, see "78 INCH CIDH PILE DETAILS" sheet.
4. For pile cutoff elevations, see "FOUNDATION DATA" sheet.
5. For edge beam reinforcement details, see "GIRDER DETAILS No. 9" thru "GIRDER DETAILS No. 13" sheets.

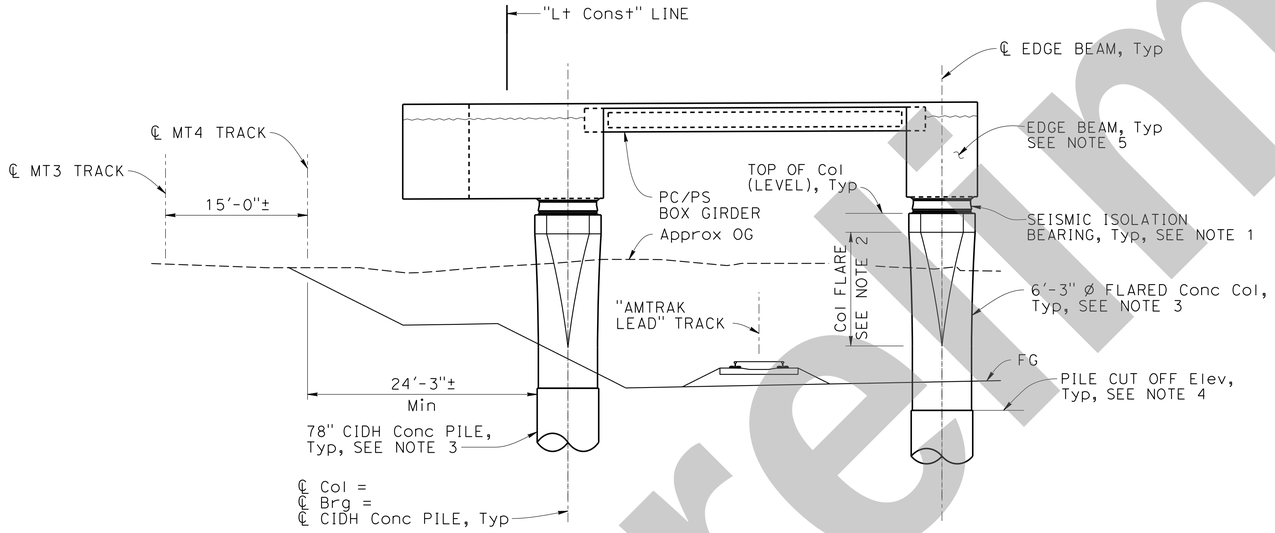

ELEVATION
⅛" = 1'-0"

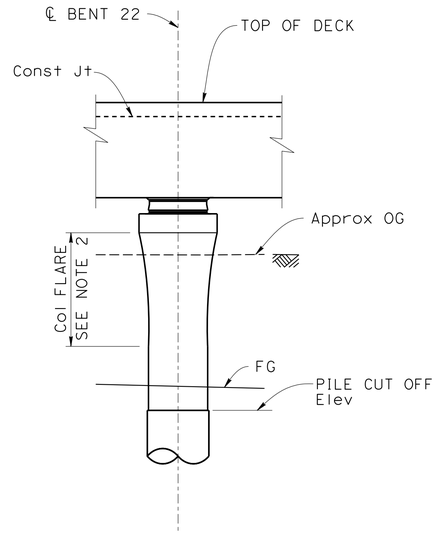

RIGHT END ELEVATION
⅛" = 1'-0"

NOTE:
THE CONTRACTOR MUST VERIFY ALL CONTROLLING FIELD DIMENSIONS BEFORE ORDERING OR FABRICATING ANY MATERIAL.

INTERMEDIATE SUBMITTAL - 02/21/25

Preliminary

X
DESIGN OVERSIGHT
X
SIGN OFF DATE

	BY	CHECKED
DESIGN	A. Banesh	X
DETAILS	R. Ewing	X
QUANTITIES	X	X

PREPARED FOR THE
STATE OF CALIFORNIA
DEPARTMENT OF TRANSPORTATION

Daniel Weddell
PROJECT ENGINEER

BRIDGE No. X
POST MILE X

LAUS VIADUCT OVER US-101
BENT 22 LAYOUT

STRUCTURES DESIGN DETAIL SHEET (ENGLISH) (REVISION 8/16/2021)

DATE PLOTTED => 2/20/2025 TIME PLOTTED => 6:38:26 PM
FILE => Bent 22 Layout USERNAME => ABANESH

ORIGINAL SCALE IN INCHES FOR REDUCED PLANS 0 1 2 3

PROJECT NUMBER & PHASE: 07150001191
COUNTY/ROUTE: LA/101
CONTRACT No.: 07-220001

DISREGARD PRINTS BEARING EARLIER REVISION DATES →

REVISION DATES				SHEET	OF
2/21/25				52	171

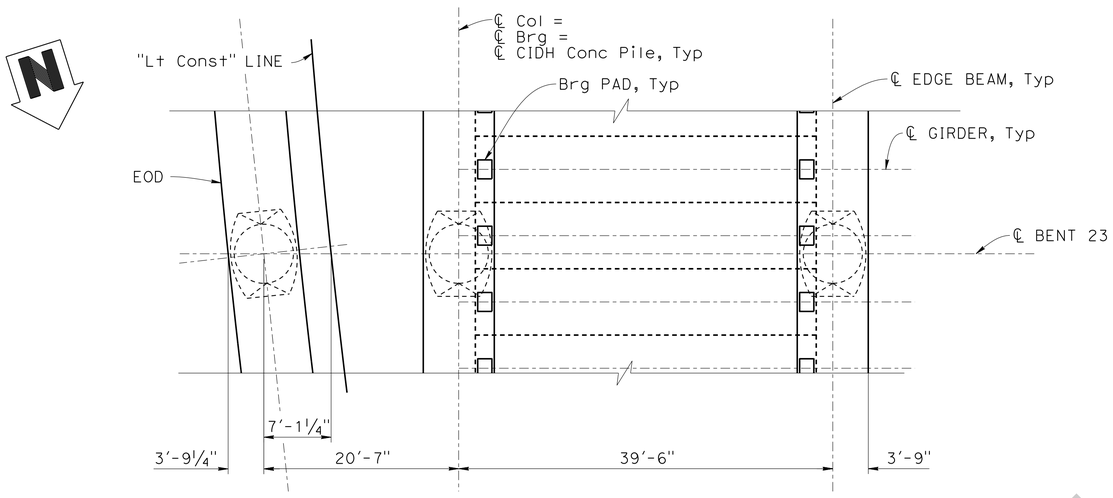

PLAN
⅛" = 1'-0"

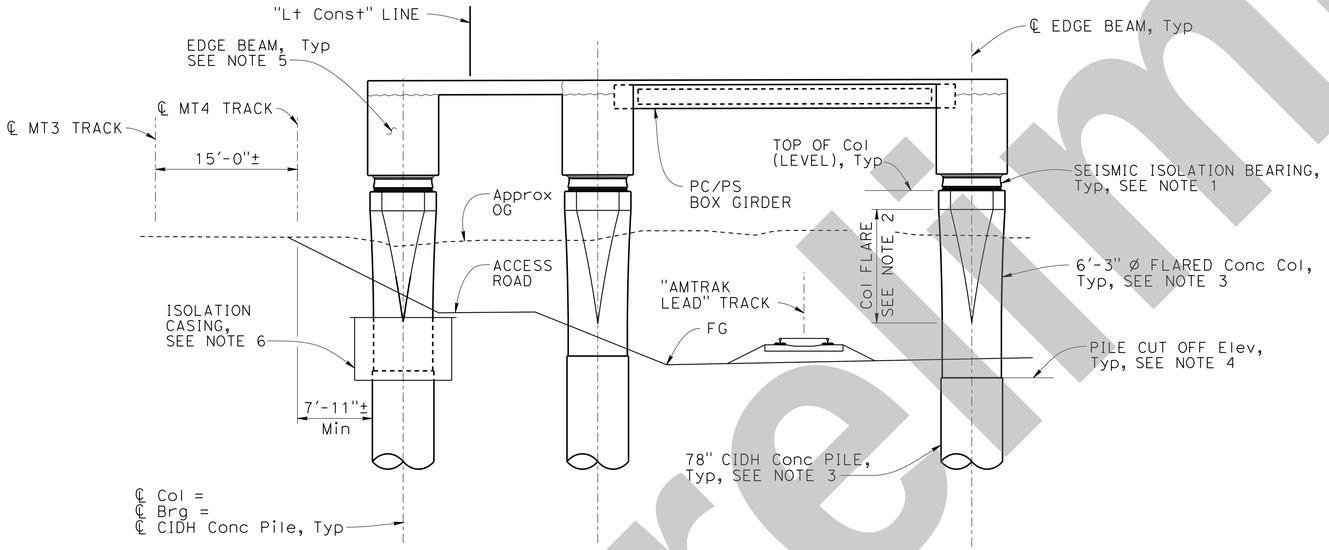

ELEVATION
⅛" = 1'-0"

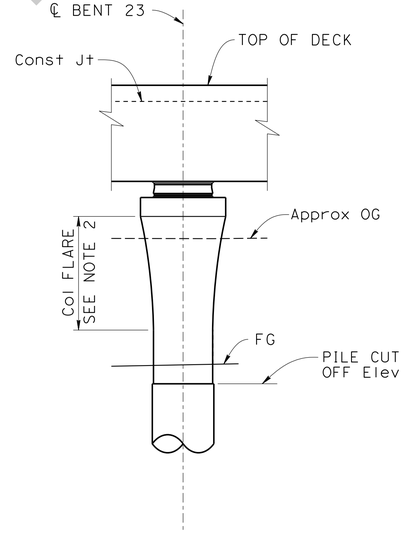

RIGHT END ELEVATION
⅛" = 1'-0"

NOTES:

1. For seismic isolation bearing details, see "SEISMIC ISOLATION BEARING DETAILS No. 1" thru "SEISMIC ISOLATION BEARING DETAILS No. 3" sheets.
2. For column flare geometry, see "COLUMN FLARE DETAILS No. 1" sheet.
3. For column and CIDH pile details, see "78 INCH CIDH PILE DETAILS" sheet.
4. For pile cutoff elevations, see "FOUNDATION DATA" sheet.
5. For edge beam reinforcement details, see "GIRDER DETAILS No. 9" thru "GIRDER DETAILS No. 13" sheets.
6. For isolation casing length and details, see "COLUMN ISOLATION CASING DETAILS" sheet.

NOTE:
THE CONTRACTOR MUST VERIFY ALL CONTROLLING FIELD DIMENSIONS BEFORE ORDERING OR FABRICATING ANY MATERIAL.

Dist	COUNTY	ROUTE	POST MILES TOTAL PROJECT	SHEET No.	TOTAL SHEETS
07	LA	105, 101	17.0/17.3, 0.4/0.7	X	X

X
REGISTERED CIVIL ENGINEER — DATE

X
PLANS APPROVAL DATE

REGISTERED PROFESSIONAL ENGINEER — Montserrat Martin — No. C64771 — Exp. 6/30/25 — CIVIL — STATE OF CALIFORNIA

THE STATE OF CALIFORNIA OR ITS OFFICERS OR AGENTS SHALL NOT BE RESPONSIBLE FOR THE ACCURACY OR COMPLETENESS OF SCANNED COPIES OF THIS PLAN SHEET.

HDR, INC
3220 EL CAMINO REAL
SUITE 200
IRVINE, CA 92602

LA METRO
ONE GATEWAY PLAZA
LOS ANGELES, CA 90012

INTERMEDIATE SUBMITTAL - 02/21/25

Preliminary

X
DESIGN OVERSIGHT

X
SIGN OFF DATE

	BY	CHECKED
DESIGN	A. Banesh	X
DETAILS	R. Ewing	X
QUANTITIES	X	X

PREPARED FOR THE STATE OF CALIFORNIA DEPARTMENT OF TRANSPORTATION

Daniel Weddell
PROJECT ENGINEER

BRIDGE No. X
POST MILE X

LAUS VIADUCT OVER US-101
BENT 23 LAYOUT

STRUCTURES DESIGN DETAIL SHEET (ENGLISH) (REVISION 8/16/2021)

DATE PLOTTED => 2/20/2025 TIME PLOTTED => 6:38:31 PM
FILE => Bent 23 Layout USERNAME => ABANESH

ORIGINAL SCALE IN INCHES FOR REDUCED PLANS 0 1 2 3

PROJECT NUMBER & PHASE: 07150001191
COUNTY/ROUTE: LA/101
CONTRACT No.: 07-220001

DISREGARD PRINTS BEARING EARLIER REVISION DATES →

REVISION DATES				SHEET	OF
2/21/25				53	171

Dist	COUNTY	ROUTE	POST MILES TOTAL PROJECT	SHEET No.	TOTAL SHEETS
07	LA	105, 101	17.0/17.3, 0.4/0.7	X	X

REGISTERED CIVIL ENGINEER — DATE X

PLANS APPROVAL DATE X

Montserrat Martin, No. C64771, Exp. 6/30/25, CIVIL — REGISTERED PROFESSIONAL ENGINEER — STATE OF CALIFORNIA

THE STATE OF CALIFORNIA OR ITS OFFICERS OR AGENTS SHALL NOT BE RESPONSIBLE FOR THE ACCURACY OR COMPLETENESS OF SCANNED COPIES OF THIS PLAN SHEET.

HDR, INC
3220 EL CAMINO REAL
SUITE 200
IRVINE, CA 92602

LA METRO
ONE GATEWAY PLAZA
LOS ANGELES, CA 90012

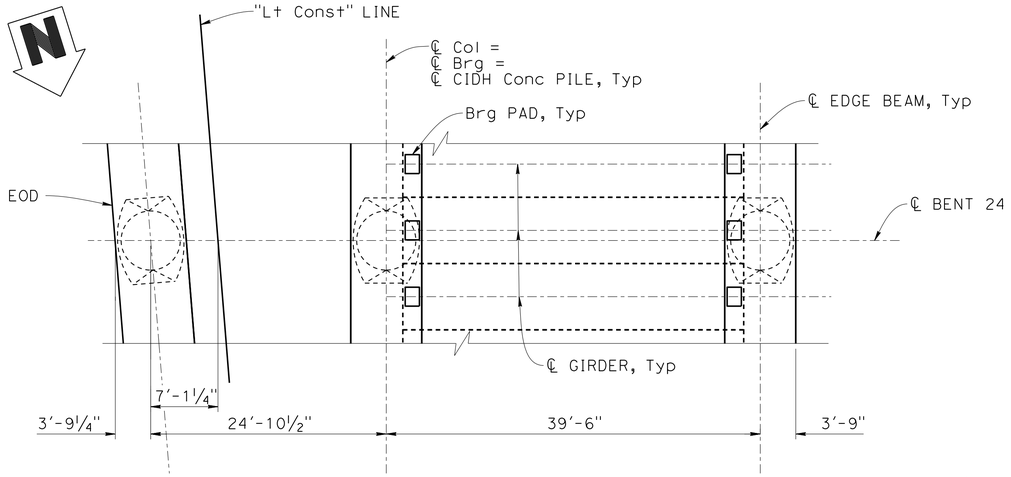

PLAN
⅛" = 1'-0"

NOTES:

1. For seismic isolation bearing details, see "SEISMIC ISOLATION BEARING DETAILS No. 1" thru "SEISMIC ISOLATION BEARING DETAILS No. 3" sheets.
2. For column flare geometry, see "COLUMN FLARE DETAILS No.1" sheet.
3. For column and CIDH pile details, see "78 INCH CIDH PILE DETAILS" sheet.
4. For pile cutoff elevations, see "FOUNDATION DATA" sheet.
5. For edge beam reinforcement details, see "GIRDER DETAILS No. 9" thru "GIRDER DETAILS No. 13" sheets.
6. For isolation casing length and details, see "COLUMN ISOLATION CASING DETAILS" sheet.

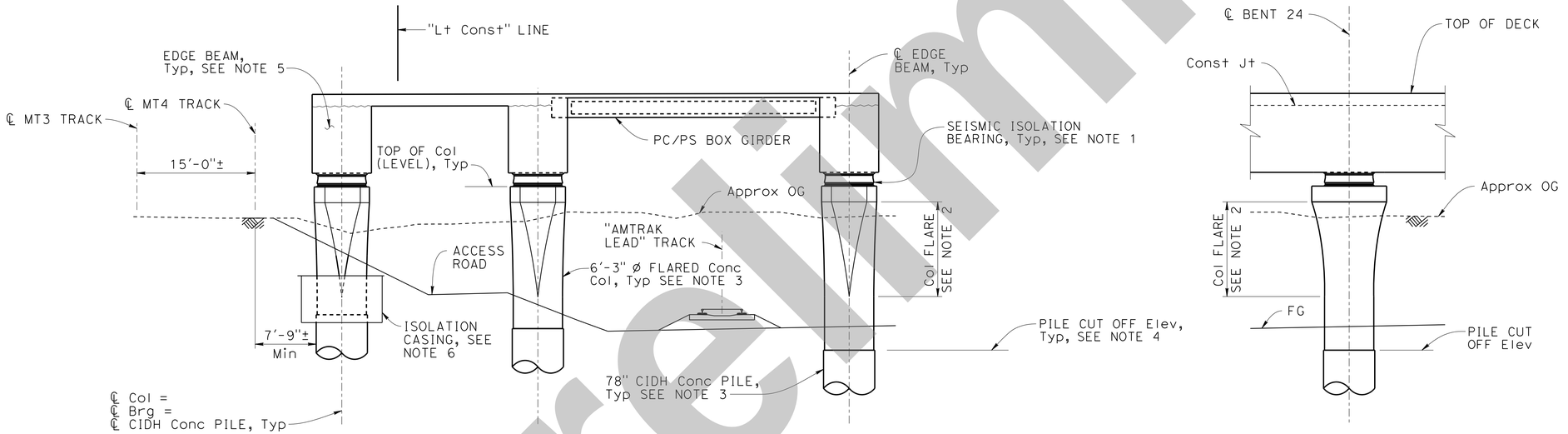

ELEVATION
⅛" = 1'-0"

RIGHT END ELEVATION
⅛" = 1'-0"

NOTE:
THE CONTRACTOR MUST VERIFY ALL CONTROLLING FIELD DIMENSIONS BEFORE ORDERING OR FABRICATING ANY MATERIAL.

INTERMEDIATE SUBMITTAL - 02/21/25

Preliminary

X
DESIGN OVERSIGHT
X
SIGN OFF DATE

	BY	CHECKED
DESIGN	A. Banesh	X
DETAILS	R. Ewing	X
QUANTITIES	X	X

PREPARED FOR THE STATE OF CALIFORNIA DEPARTMENT OF TRANSPORTATION

Daniel Weddell
PROJECT ENGINEER

BRIDGE No. X
POST MILE X

LAUS VIADUCT OVER US-101
BENT 24 LAYOUT

STRUCTURES DESIGN DETAIL SHEET (ENGLISH) (REVISION 8/16/2021)

DATE PLOTTED => 2/20/2025 TIME PLOTTED => 6:38:38 PM
FILE => Bent 24 Layout USERNAME => ABANESH

ORIGINAL SCALE IN INCHES FOR REDUCED PLANS 0 1 2 3

PROJECT NUMBER & PHASE: 07150001191
COUNTY/ROUTE: LA/101
CONTRACT No.: 07-220001

DISREGARD PRINTS BEARING EARLIER REVISION DATES →

REVISION DATES	SHEET	OF
2/21/25	54	171

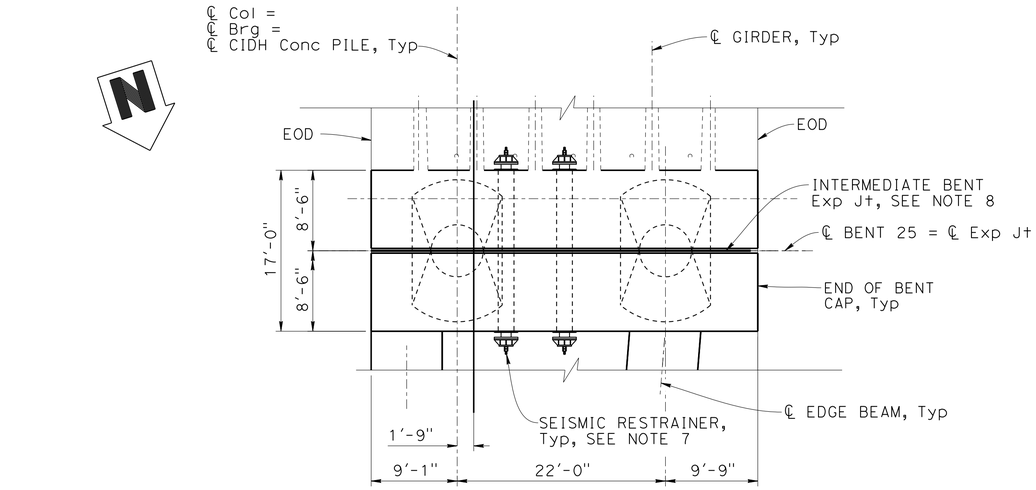

PLAN
1/8" = 1'-0"

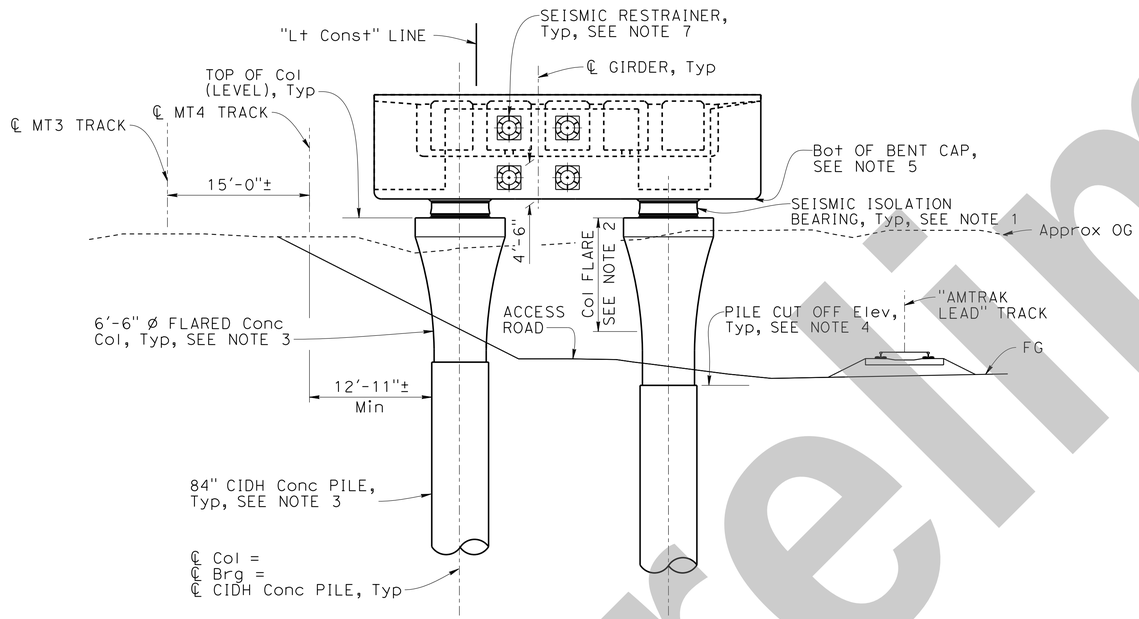

ELEVATION
1/8" = 1'-0"

NOTES:

1. For seismic isolation bearing details, see "SEISMIC ISOLATION BEARING DETAILS No. 1" thru "SEISMIC ISOLATION BEARING DETAILS No. 3" sheets.
2. For column flare geometry, see "COLUMN FLARE DETAILS No. 2" sheet.
3. For column and CIDH pile details, see "84 INCH CIDH PILE DETAILS" sheet.
4. For pile cutoff elevations, see "FOUNDATION DATA" sheet.
5. Bottom of bent cap is a constant offset from the top of deck.
6. For bent cap reinforcement details, see "BENT DETAILS No. 7" sheet.
7. For seismic restrainer details, see "SEISMIC RESTRAINER DETAILS No. 1" and "SEISMIC RESTRAINER DETAILS No. 2" sheets.
8. For intermediate bent expansion joint details, see "INTERMEDIATE BENT EXPANSION JOINT" sheet.

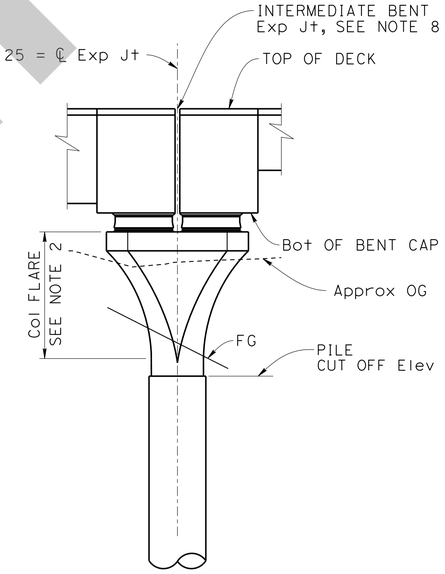

RIGHT END ELEVATION
1/8" = 1'-0"

NOTE:
THE CONTRACTOR MUST VERIFY ALL CONTROLLING FIELD DIMENSIONS BEFORE ORDERING OR FABRICATING ANY MATERIAL.

Dist	COUNTY	ROUTE	POST MILES TOTAL PROJECT	SHEET No.	TOTAL SHEETS
07	LA	105, 101	17.0/17.3, 0.4/0.7	X	X

REGISTERED CIVIL ENGINEER — DATE X

PLANS APPROVAL DATE X

REGISTERED PROFESSIONAL ENGINEER — Montserrat Martin — No. C64771 — Exp. 6/30/25 — CIVIL — STATE OF CALIFORNIA

THE STATE OF CALIFORNIA OR ITS OFFICERS OR AGENTS SHALL NOT BE RESPONSIBLE FOR THE ACCURACY OR COMPLETENESS OF SCANNED COPIES OF THIS PLAN SHEET.

HDR, INC
3220 EL CAMINO REAL
SUITE 200
IRVINE, CA 92602

LA METRO
ONE GATEWAY PLAZA
LOS ANGELES, CA 90012

INTERMEDIATE SUBMITTAL - 02/21/25

X
DESIGN OVERSIGHT

X
SIGN OFF DATE

	BY	CHECKED
DESIGN	A. Banesh	X
DETAILS	R. Ewing	X
QUANTITIES	X	X

PREPARED FOR THE STATE OF CALIFORNIA DEPARTMENT OF TRANSPORTATION

Daniel Weddell
PROJECT ENGINEER

BRIDGE NO. X
POST MILE X

LAUS VIADUCT OVER US-101
BENT 25 LAYOUT

STRUCTURES DESIGN DETAIL SHEET (ENGLISH) (REVISION 8/16/2021)

DATE PLOTTED => 2/20/2025
FILE => Bent 25 Layout
TIME PLOTTED => 6:38:44 PM
USERNAME => ABANESH

ORIGINAL SCALE IN INCHES FOR REDUCED PLANS 0 1 2 3

PROJECT NUMBER & PHASE: 07150001191
COUNTY/ROUTE: LA/101
CONTRACT No.: 07-220001

DISREGARD PRINTS BEARING EARLIER REVISION DATES →

REVISION DATES				SHEET	OF
2/21/25				55	171

SHEET NO 72

Preliminary

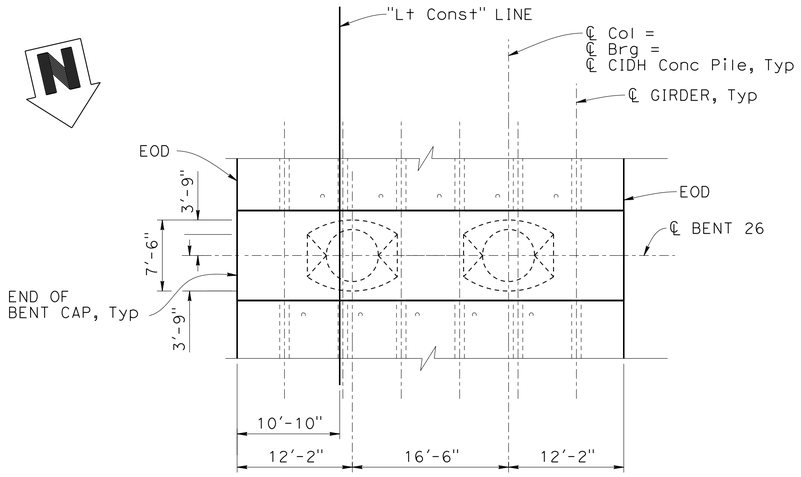

PLAN
1/8" = 1'-0"

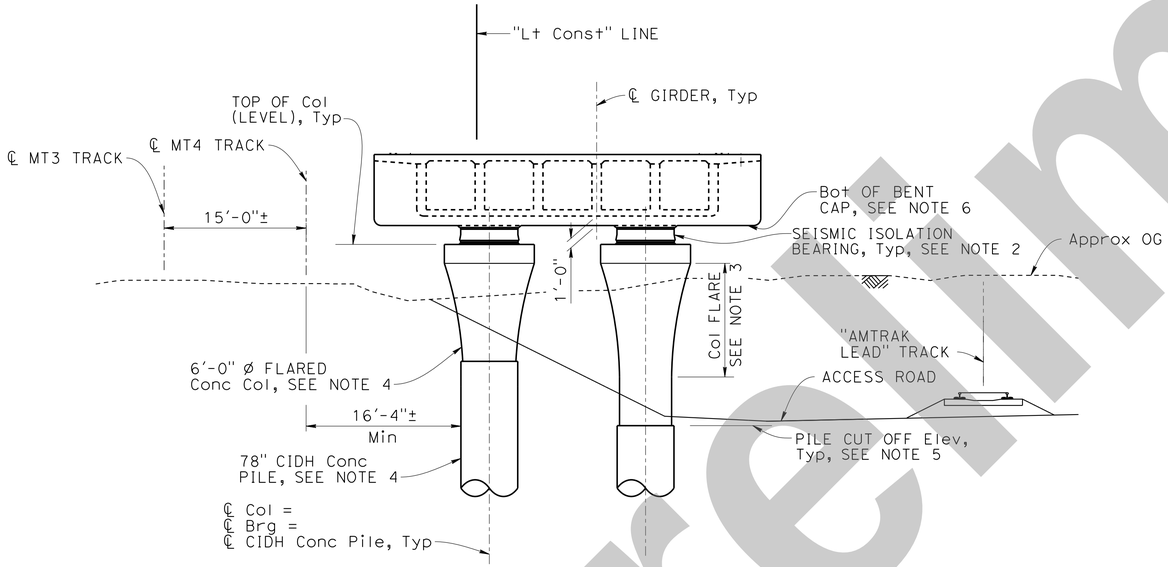

ELEVATION
1/8" = 1'-0"

Note: Back span shown, ahead span similar

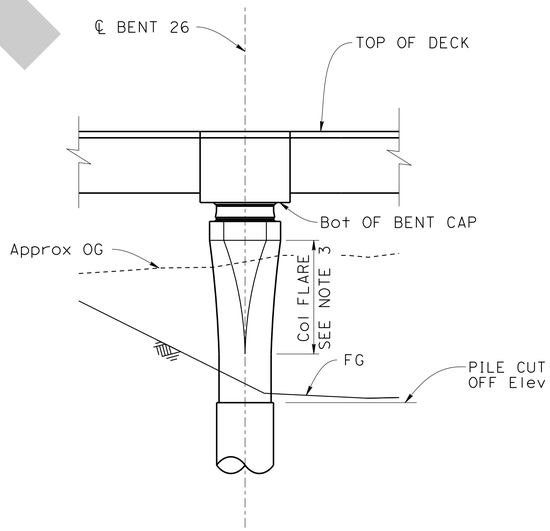

RIGHT END ELEVATION
1/8" = 1'-0"

NOTES:

1. Bent 26 shown, Bents 27 and 28 similar except as noted.
2. For seismic isolation bearing details, see "SEISMIC ISOLATION BEARING DETAILS No. 1" thru "SEISMIC ISOLATION BEARING DETAILS No. 3" sheets.
3. For column flare geometry, see "COLUMN FLARE DETAILS No. 1" sheet.
4. For column and CIDH pile details, see "78 INCH CIDH PILE DETAILS" sheet.
5. For pile cutoff elevations, see "FOUNDATION DATA" sheet.
6. Bottom of bent cap is a constant offset from the top of deck.
7. For bent cap reinforcement details, see "BENT DETAILS No. 1" and "BENT DETAILS NO. 2" sheets.

NOTE:
THE CONTRACTOR MUST VERIFY ALL CONTROLLING FIELD DIMENSIONS BEFORE ORDERING OR FABRICATING ANY MATERIAL.

Dist	COUNTY	ROUTE	POST MILES TOTAL PROJECT	SHEET No.	TOTAL SHEETS
07	LA	105, 101	17.0/17.3, 0.4/0.7	X	X

X
REGISTERED CIVIL ENGINEER — DATE

X
PLANS APPROVAL DATE

REGISTERED PROFESSIONAL ENGINEER — Montserrat Martin — No. C64771 — Exp. 6/30/25 — CIVIL — STATE OF CALIFORNIA

THE STATE OF CALIFORNIA OR ITS OFFICERS OR AGENTS SHALL NOT BE RESPONSIBLE FOR THE ACCURACY OR COMPLETENESS OF SCANNED COPIES OF THIS PLAN SHEET.

HDR, INC
3220 EL CAMINO REAL
SUITE 200
IRVINE, CA 92602

LA METRO
ONE GATEWAY PLAZA
LOS ANGELES, CA 90012

INTERMEDIATE SUBMITTAL - 02/21/25

Preliminary

DESIGN	BY A. Banesh	CHECKED X	PREPARED FOR THE STATE OF CALIFORNIA DEPARTMENT OF TRANSPORTATION	Daniel Weddell, PROJECT ENGINEER
DETAILS	BY R. Ewing	CHECKED X		
QUANTITIES	BY X	CHECKED X		

X
DESIGN OVERSIGHT

X
SIGN OFF DATE

BRIDGE No. X
POST MILE X

LAUS VIADUCT OVER US-101
BENT 26, 27 AND 28 LAYOUT

STRUCTURES DESIGN DETAIL SHEET (ENGLISH) (REVISION 8/16/2021)

DATE PLOTTED => 2/20/2025 TIME PLOTTED => 6:38:50 PM
FILE => Bents 26, 27 and 28 Layou USERNAME => ABANESH

ORIGINAL SCALE IN INCHES FOR REDUCED PLANS 0 1 2 3

PROJECT NUMBER & PHASE: 07150001191
COUNTY/ROUTE: LA/101
CONTRACT No.: 07-220001

DISREGARD PRINTS BEARING EARLIER REVISION DATES →

REVISION DATES	SHEET	OF
2/21/25	56	171

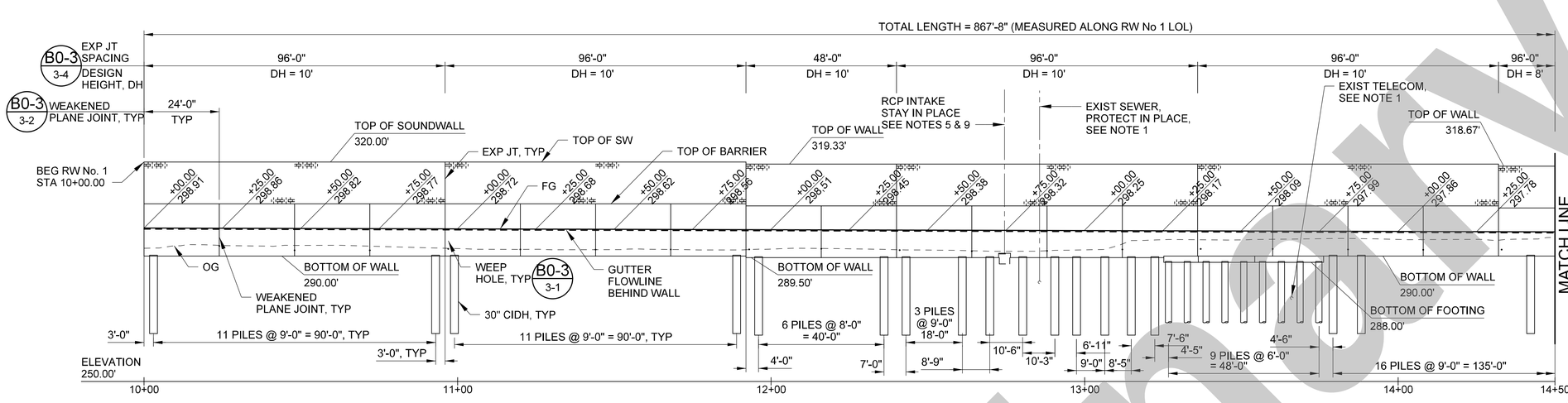

DEVELOPED ELEVATION

SCALE: 1"=20'

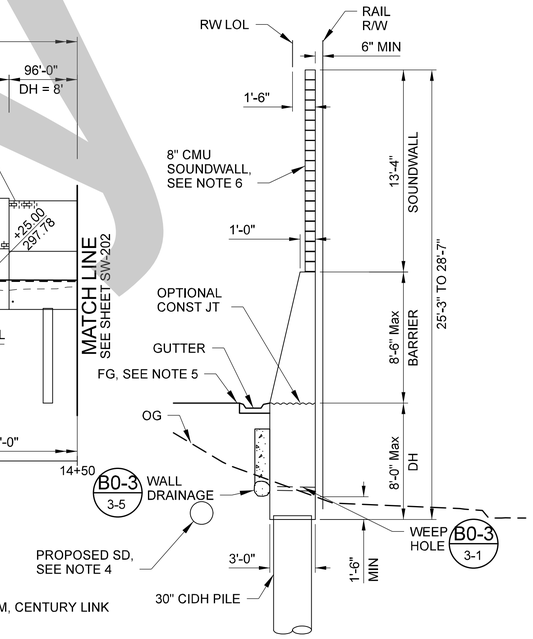

TYPICAL SECTION 1

SCALE: 1"=5'

CURVE DATA				
NO.	RADIUS	△	LENGTH	TANGENT
1	567.50'	30°58'34"	306.81'	157.25'
2	574.00'	04°39'24"	46.65'	23.34'

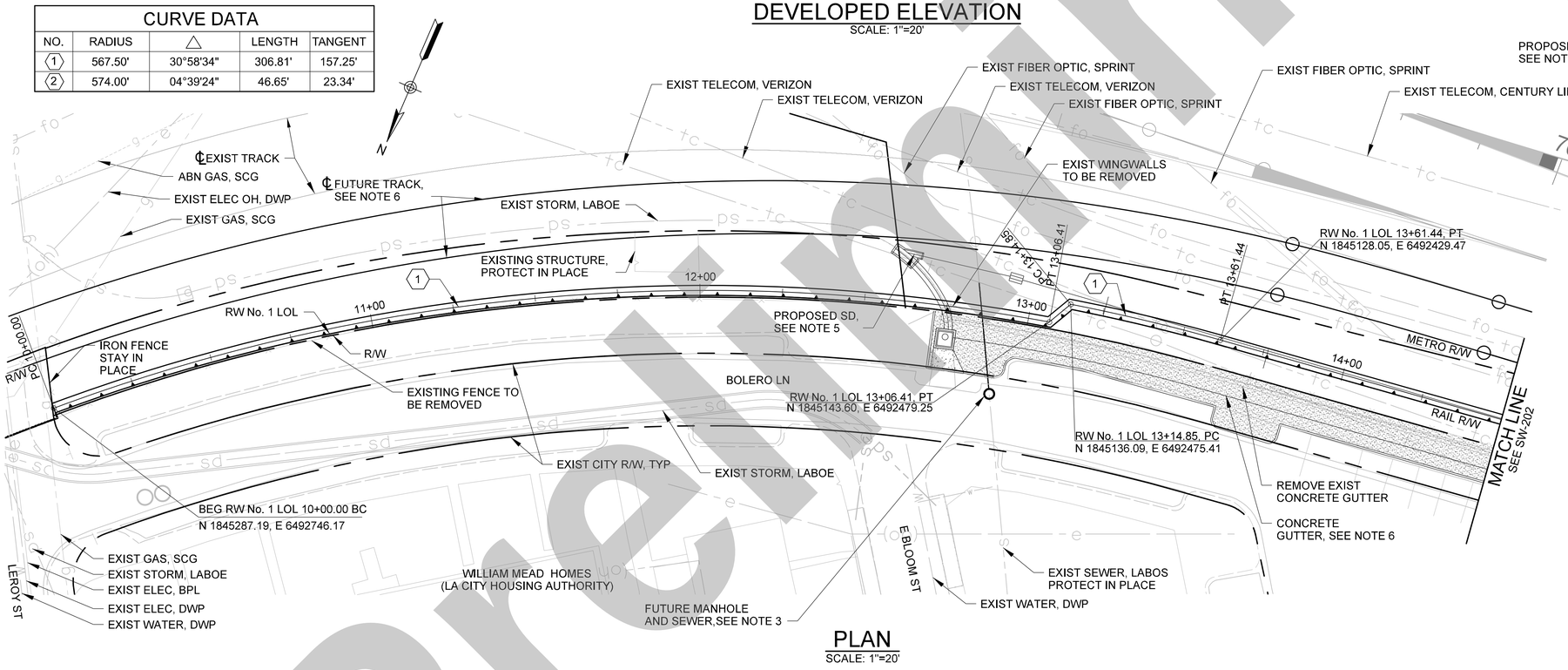

PLAN

SCALE: 1"=20'

NOTES:

1. THE CONTRACTOR SHALL VERIFY ALL CONTROLLING FIELD DIMENSIONS BEFORE ORDERING OR FABRICATING ANY MATERIAL.
2. THE CONTRACTOR SHALL VERIFY THE LOCATION OF EXISTING UTILITIES CROSSING THE PROPOSED WALL. THE CONTRACTOR SHALL POTHOLE ALL UTILITIES IN EVERY INTERSECTION CROSSING THE PROPOSED WALL.
3. SEE UTILITY PLANS FOR EXISTING AND PROPOSED UTILITIES.
4. REMOVE EXISTING WROUGHT IRON FENCE ALONG BOLERO LANE AT LIMITS OF RETAINING WALL.
5. SEE ON-SITE DRAINAGE PLANS FOR PROPOSED, STORM DRAIN BEHIND WALL.
6. SEE OFF-SITE DRAINAGE PLANS FOR RELOCATION OF DRAINAGE CHANNEL.
7. WALL DESIGNED TO ACCOMMODATE FUTURE SIXTH LEAD TRACK.
8. SEE TRACK SECTION FOR MAINTENANCE ROAD FINISHED GRADE.
9. AESTHETICS FOR OF THE WALL FACING AT THE WILLIAM MEAD HOMES (WMH) PROPERTY TO BE DETERMINED. SEE SHEET SW-206 AND SW-207 FOR CIDH AND WALL DETAILS.
10. CONSTRUCT WALL AROUND PROPOSED CONCRETE INTAKE STRUCTURE. PROTECT TOP AND BOTH SIDES WITH 2" DEGRADABLE VOID FORM.

NOT FOR CONSTRUCTION

Preliminary

THE PREPARATION OF THIS DRAWING HAS BEEN FINANCED IN PART THROUGH A GRANT FROM THE U.S. DEPARTMENT OF TRANSPORTATION, FEDERAL TRANSIT ADMINISTRATION (FTA), UNDER THE FEDERAL TRANSIT ACT OF 1964, AS AMENDED, AND IN PART BY THE TAXES OF THE CITIZENS OF LOS ANGELES COUNTY AND OF THE STATE OF CALIFORNIA.

REV	DATE	BY	APP	REG NO	EXPIRES	SEAL HOLDER	DESCRIPTION

DESIGNED BY	E. YUE
DRAWN BY	G. WEI
CHECKED BY	G. DREESZEN
IN CHARGE	T. KIM
DATE	2/21/2025

Metro — LOS ANGELES COUNTY METROPOLITAN TRANSPORTATION AUTHORITY

INNOVATIVE DESIGN COMPANY

HDR ENGINEERING
350 S. GRAND AVENUE
SUITE 1400
LOS ANGELES, CA 90071
(213) 239-5800

LINK UNION STATION PROJECT

OFFSITE STRUCTURES

WILLIAM MEAD HOMES
RETAINING WALL
GENERAL PLAN No. 1

CONTRACT NO	PS2415-3172
DRAWING NO	SW-201
REV	0
SCALE	1"=20'
SHEET NO	74

Plot Driver=$PLTDRV$$ Pentable=PlotStamp.tbl USER = gwei 7:21:38 PM 2/20/2025 $FILE$

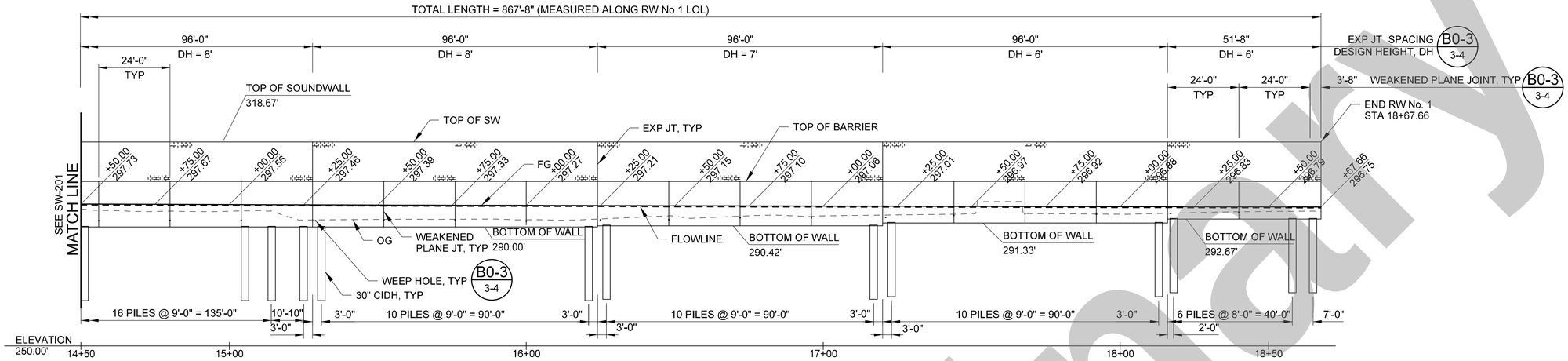

DEVELOPED ELEVATION

SCALE: 1"=20'

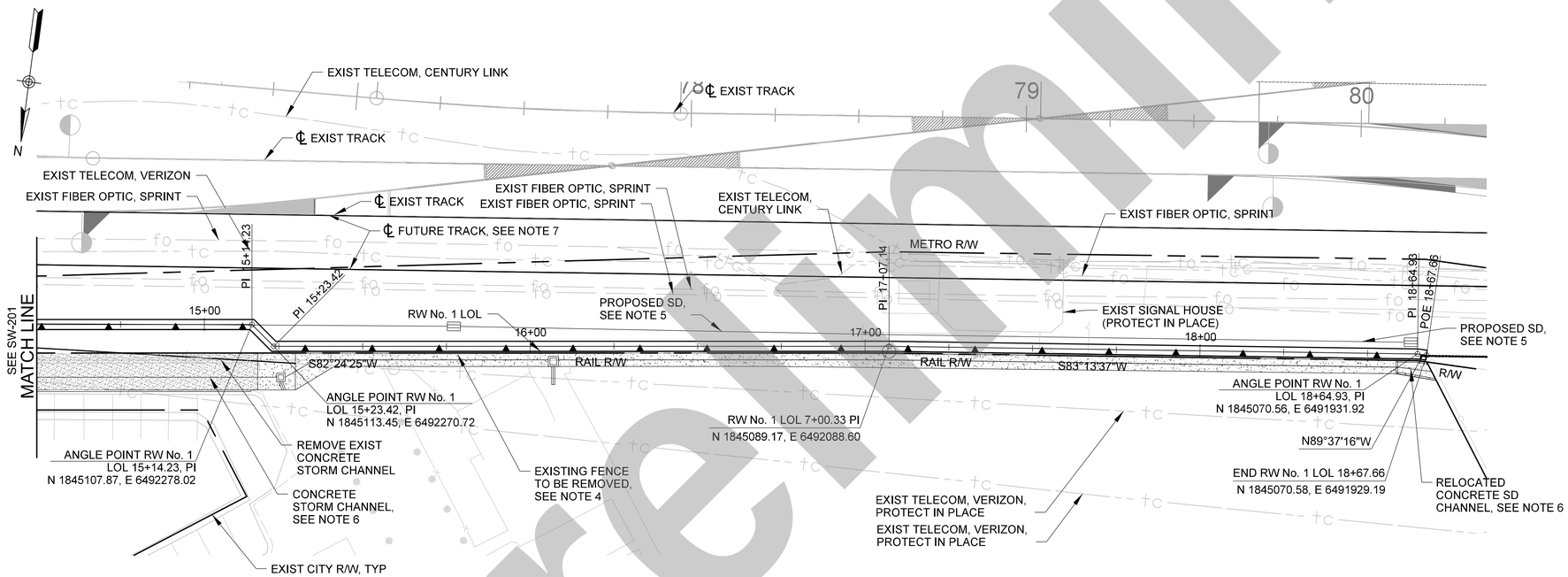

PLAN

SCALE: 1"=20'

NOTES:

1. THE CONTRACTOR SHALL VERIFY ALL CONTROLLING FIELD DIMENSIONS BEFORE ORDERING OR FABRICATING ANY MATERIAL.
2. THE CONTRACTOR SHALL VERIFY THE LOCATION OF EXISTING UTILITIES CROSSING THE PROPOSED WALL. THE CONTRACTOR SHALL POTHOLE ALL UTILITIES IN EVERY INTERSECTION CROSSING THE PROPOSED WALL.
3. SEE UTILITY PLANS FOR EXISTING AND PROPOSED UTILITIES.
4. REMOVE EXISTING WROUGHT IRON FENCE ALONG BOLERO LANE AT LIMITS OF RETAINING WALL.
5. SEE ON-SITE DRAINAGE PLANS FOR PROPOSED, STORM DRAIN BEHIND WALL.
6. SEE OFF-SITE DRAINAGE PLANS FOR RELOCATION OF DRAINAGE CHANNEL.
7. WALL DESIGNED TO ACCOMMODATE FUTURE SIXTH LEAD TRACK.
8. SEE TRACK SECTION FOR MAINTENANCE ROAD FINISHED GRADE.
9. AESTHETICS FOR OF THE WALL FACING AT THE WILLIAM MEAD HOMES (WMH) PROPERTY TO BE DETERMINED. SEE SHEET SW-206 AND SW-207 FOR CIDH AND WALL DETAILS.
10. CONSTRUCT WALL AROUND PROPOSED CONCRETE INTAKE STRUCTURE. PROTECT TOP AND BOTH SIDES WITH 2" DEGRADABLE VOID FORM.

Preliminary

NOT FOR CONSTRUCTION

THE PREPARATION OF THIS DRAWING HAS BEEN FINANCED IN PART THROUGH A GRANT FROM THE U.S. DEPARTMENT OF TRANSPORTATION, FEDERAL TRANSIT ADMINISTRATION (FTA), UNDER THE FEDERAL TRANSIT ACT OF 1964, AS AMENDED, AND IN PART BY THE TAXES OF THE CITIZENS OF LOS ANGELES COUNTY AND OF THE STATE OF CALIFORNIA.

REV	DATE	BY	APP	REG NO	EXPIRES	SEAL HOLDER	DESCRIPTION

DESIGNED BY E. YUE
DRAWN BY G. WEI
CHECKED BY G. DREESZEN
IN CHARGE T. KIM
DATE 2/21/2025

Metro
LOS ANGELES COUNTY METROPOLITAN TRANSPORTATION AUTHORITY
INNOVATIVE DESIGN COMPANY
HDR ENGINEERING
350 S. GRAND AVENUE
SUITE 2600
LOS ANGELES, CA 90071
(213) 239-5800

LINK UNION STATION PROJECT

OFFSITE STRUCTURES

WILLIAM MEAD HOMES
RETAINING WALL
GENERAL PLAN No. 2

CONTRACT NO PS2415-3172
DRAWING NO SW-202
REV 0
SCALE 1"=20'
SHEET NO 75

Plot Driver=$PLTDRV$$ Pentable=PlotStamp.tbl USER = gwei 7:22:00 PM 2/20/2025 $FILE$

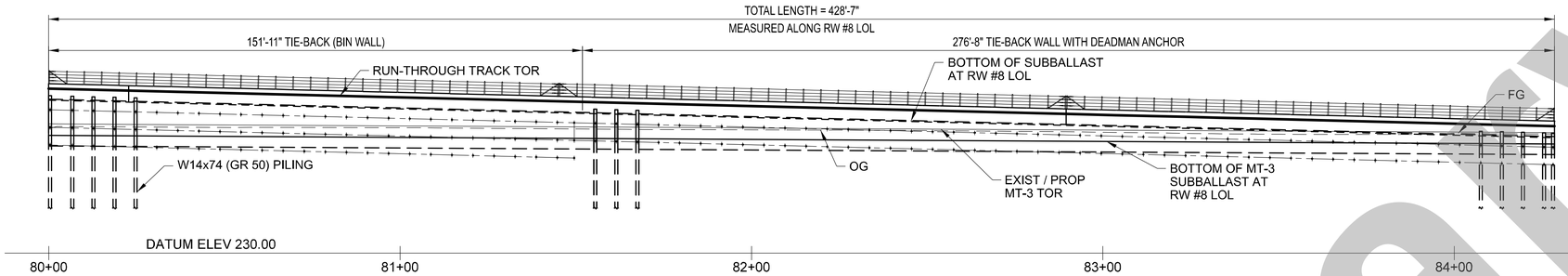

DEVELOPED MIRRORED ELEVATION - RW #8

SCALE: 1"=20'

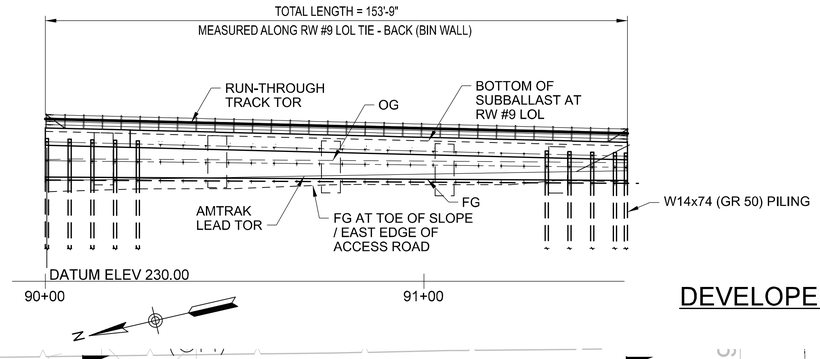

CURVE DATA								
NO.	RADIUS	△	LENGTH	TANGENT	Ls	Ea	Eu	V
1	742.50'	17°27'32"	226.25'	114.01'	110.00'	1.75"	3.12"	30MPH

DEVELOPED ELEVATION - RW #9

SCALE: 1"=20'

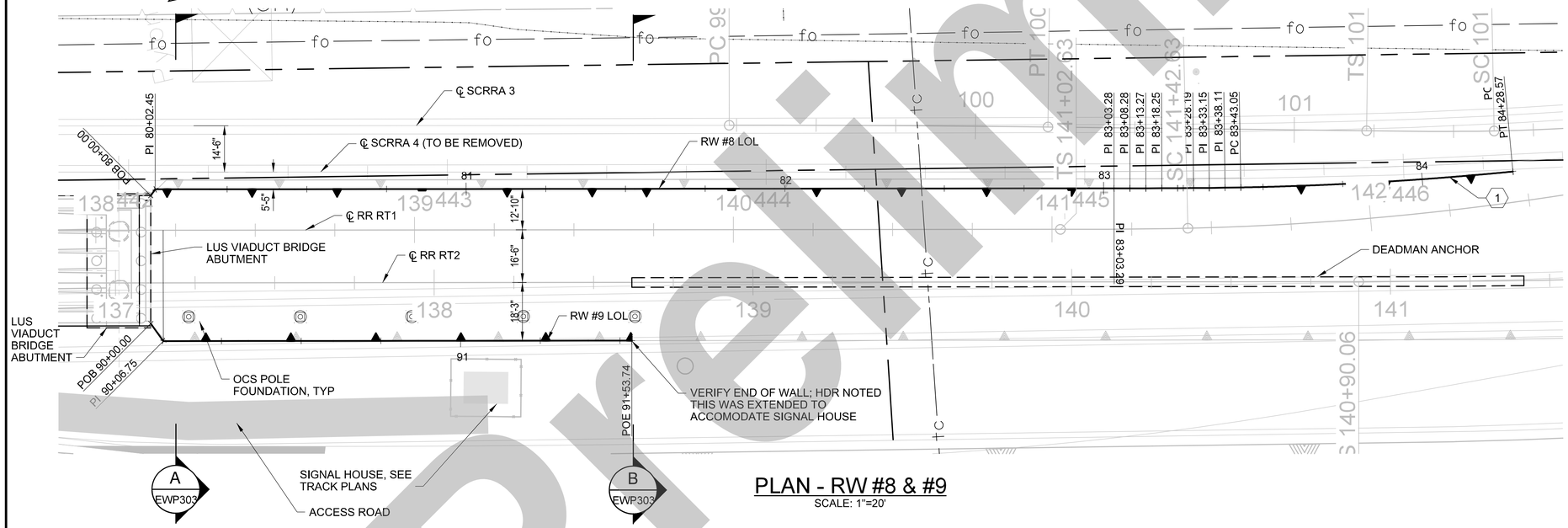

PLAN - RW #8 & #9

SCALE: 1"=20'

NOTES:

1. THIS PLAN ACCURATE FOR WALL WORK ONLY.
2. THE CONTRACTOR SHALL VERIFY ALL CONTROLLING FIELD DIMENSIONS BEFORE ORDERING OR FABRICATING ANY MATERIAL.
3. THE CONTRACTOR SHALL VERIFY THE LOCATION OF EXISTING UTILITIES CROSSING THE PROPOSED WALL. THE CONTRACTOR SHALL POTHOLE ALL UTILITIES IN EVERY INTERSECTION CROSSING THE PROPOSED WALL.
4. THE CONTRACTOR SHALL VERIFY ALL CONTROLLING FIELD DIMENSIONS BEFORE ORDERING OR FABRICATING ANY MATERIAL.
5. THE CONTRACTOR SHALL VERIFY THE LOCATION OF EXISTING UTILITIES CROSSING THE PROPOSED WALL. THE CONTRACTOR SHALL POTHOLE ALL UTILITIES IN EVERY INTERSECTION CROSSING THE PROPOSED WALL.
6. SEE DRAINAGE PLANS FOR TRACK UNDERDRAIN AND DRAINAGE INFORMATION.
7. SEE UTILITY PLANS FOR EXISTING UTILITY INFORMATION.
8. FOR RETAINING WALL TYPICAL SECTIONS, SEE "GENERAL SECTIONS" SHEET.
9. SEE ROADWAY PLANS FOR MAINTENANCE ACCESS ROADWAY INFORMATION.
10. SEE TRACK PLANS FOR DETAILS OF PROPOSED TRACK CONSTRUCTION.
11. SEE LUS VADUCT PLANS FOR BRIDGE AND ABUTMENT CONSTRUCTION.
12. FOR STRUCTURAL NOTES AND LEGEND, SEE "INDEX TO PLANS" SHEET.
13. ARCHITECTURAL FINISH TO BE PROVIDED IN NEXT PHASE.
14. FOR PROJECT WIDE ABBREVIATIONS, SEE SHEETS "INDEX TO PLANS" SHEET.
15. FOR RETAINING WALL DETAILS, SEE SHEETS EWP3-311 TO EWP3-319.

NOT FOR CONSTRUCTION

Preliminary

THE PREPARATION OF THIS DRAWING HAS BEEN FINANCED IN PART THROUGH A GRANT FROM THE U.S. DEPARTMENT OF TRANSPORTATION, FEDERAL TRANSIT ADMINISTRATION (FTA), UNDER THE FEDERAL TRANSIT ACT OF 1964, AS AMENDED, AND IN PART BY THE TAXES OF THE CITIZENS OF LOS ANGELES COUNTY AND OF THE STATE OF CALIFORNIA.

REV	DATE	BY	APP	REG NO	EXPIRES	SEAL HOLDER	DESCRIPTION

DESIGNED BY	E. YUE
DRAWN BY	G. WEI
CHECKED BY	G. DREESZEN
IN CHARGE	T. KIM
DATE	2/21/2025

Metro — LOS ANGELES COUNTY METROPOLITAN TRANSPORTATION AUTHORITY

INNOVATIVE DESIGN COMPANY

HDR ENGINEERING
350 S. GRAND AVENUE
SUITE 2900
LOS ANGELES, CA 90071
(213) 239-5800

LINK UNION STATION PROJECT
OFFSITE STRUCTURES
RW #8 & #9 GENERAL PLAN

CONTRACT NO	PS2415-3172
DRAWING NO	EWP3-302
REV	0
SCALE	1"=20'
SHEET NO	76

$FILE$ 2/21/2025 2:29:13 AM USER = gwei Pentable=PlotStamp.tbl Plot Driver=$PLTDRVS$

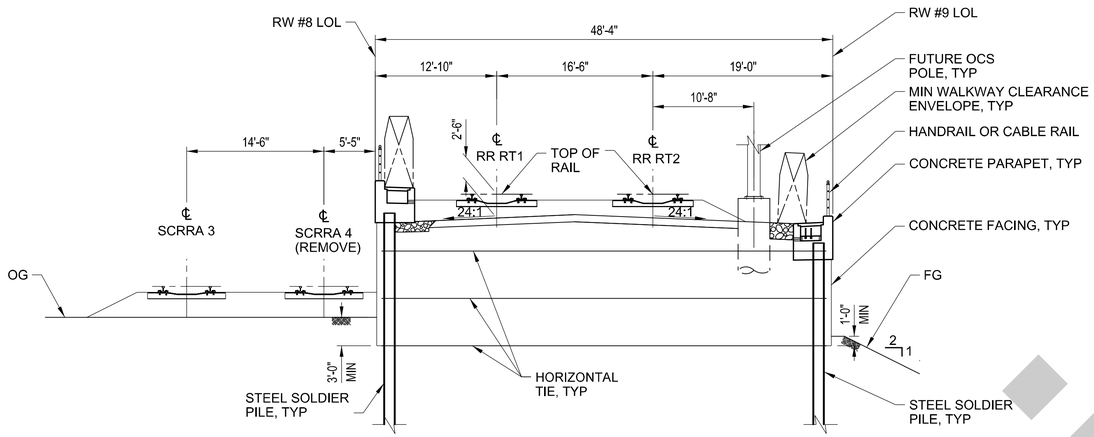

SECTION - RW #8 & #9

NO SCALE
(RW #8 LOL 80+00.00~81+51.94
RW #9 LOL 90+00~91+53.74)

A — EWP3-302 / EWP3-309

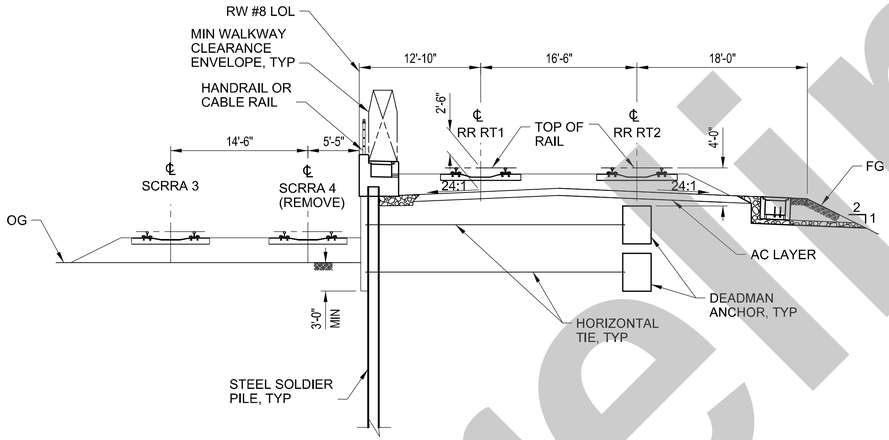

SECTION - RW #8

NO SCALE
(RW #8 LOL 81+51.94~84+28.57)

B — EWP3-302

NOTES:

1. SEE DRANAGE PLANS FOR UNDERDRAIN DETAILS.
2. SEE TRACK PLANS FOR DETAILS OF PROPOSED TRACK CONSTRUCTION AND GRADING INFORMATION.

Preliminary

NOT FOR CONSTRUCTION

THE PREPARATION OF THIS DRAWING HAS BEEN FINANCED IN PART THROUGH A GRANT FROM THE U.S. DEPARTMENT OF TRANSPORTATION, FEDERAL TRANSIT ADMINISTRATION (FTA), UNDER THE FEDERAL TRANSIT ACT OF 1964, AS AMENDED, AND IN PART BY THE TAXES OF THE CITIZENS OF LOS ANGELES COUNTY AND OF THE STATE OF CALIFORNIA.

REV	DATE	BY	APP	REG NO	EXPIRES	SEAL HOLDER	DESCRIPTION

DESIGNED BY	E. YUE
DRAWN BY	G. WEI
CHECKED BY	G. DREESZEN
IN CHARGE	T. KIM
DATE	2/21/2025

Metro
LOS ANGELES COUNTY METROPOLITAN TRANSPORTATION AUTHORITY
INNOVATIVE DESIGN COMPANY
HDR ENGINEERING
350 S. GRAND AVENUE SUITE 2500 LOS ANGELES, CA 90071 (213) 2394800

LINK UNION STATION PROJECT
OFFSITE STRUCTURES
RW #8 & #9 GENERAL SECTIONS

CONTRACT NO	PS2415-3172
DRAWING NO	EWP3-303
REV	0
SCALE	NO SCALE
SHEET NO	77

Plot Driver=$PLTDRVS$ Pentable=PlotStamp.tbl USER = gwei 2:07:43 AM 2/21/2025 $FILE$

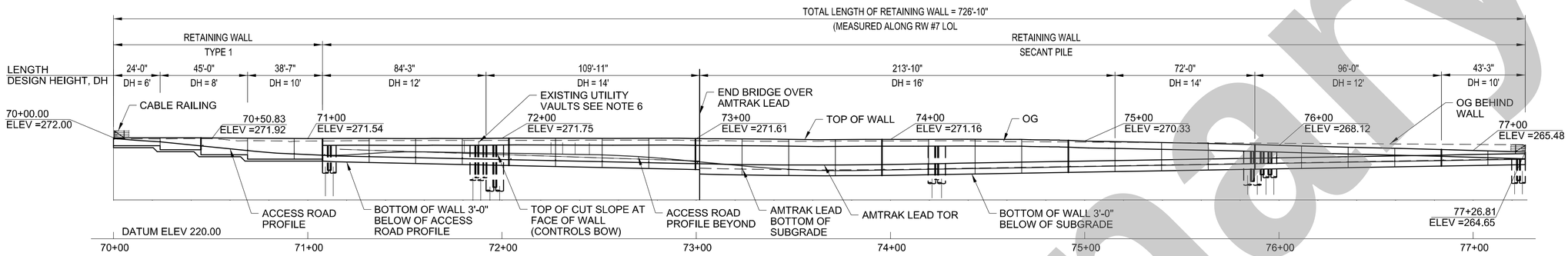

NOTES:

1. THIS PLAN ACCURATE FOR WALL WORK ONLY.
2. SEE DRAINAGE PLANS FOR TRACK UNDER DRAIN AND DRAINAGE INFORMATION.
3. SEE UTILITY PLANS FOR EXISTING UTILITY INFORMATION.
4. EXISTING UTILITY VAULTS TO BE PROTECTED IN PLACE.
5. SEE ROADWAY PLANS FOR MAINTENANCE ACCESS ROADWAY INFORMATION.
6. SEE TRACK PLANS FOR DETAILS OF PROPOSED TRACK CONSTRUCTION.
7. SEE LUS VIADUCT PLANS FOR BRIDGE AND COLUMN CONSTRUCTION.
8. FOR STRUCTURAL NOTES AND LEGEND, SEE "INDEX TO PLANS" SHEET.
9. ARCHITECTURAL FINISH TO BE PROVIDED IN NEXT PHASE.
10. FOR PROJECT WIDE ABBREVIATIONS, SEE SHEETS XX.
11. FOR RETAINING WALL DETAILS, SEE SHEETS EWP3-334 TO EWP3-337.

MIRRORED DEVELOPED ELEVATION - RW #7

SCALE: 1"=30'

CURVE DATA				
NO.	RADIUS	△	LENGTH	TANGENT
1	30.00'	33°18'53"	17.44'	8.97'
2	32.00'	39°04'04"	21.82'	11.35'

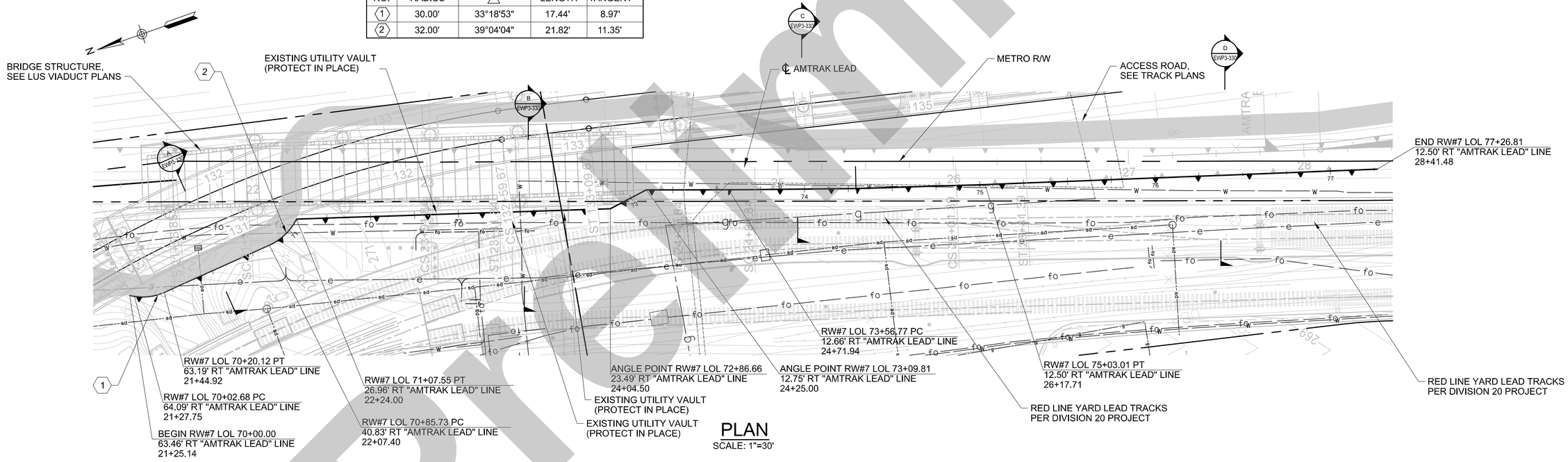

PLAN

SCALE: 1"=30'

NOT FOR CONSTRUCTION

Preliminary

THE PREPARATION OF THIS DRAWING HAS BEEN FINANCED IN PART THROUGH A GRANT FROM THE U.S. DEPARTMENT OF TRANSPORTATION, FEDERAL TRANSIT ADMINISTRATION (FTA), UNDER THE FEDERAL TRANSIT ACT OF 1964, AS AMENDED, AND IN PART BY THE TAXES OF THE CITIZENS OF LOS ANGELES COUNTY AND OF THE STATE OF CALIFORNIA.

REV	DATE	BY	APP	REG NO	EXPIRES	SEAL HOLDER	DESCRIPTION

DESIGNED BY E. YUE
DRAWN BY G. WEI
CHECKED BY G. DREESZEN
IN CHARGE T. KIM
DATE 2/21/2025

Metro
LOS ANGELES COUNTY METROPOLITAN TRANSPORTATION AUTHORITY
INNOVATIVE DESIGN COMPANY
HDR ENGINEERING
350 S. GRAND AVENUE SUITE 2900 LOS ANGELES, CA 90071 (213) 239-5800

LINK UNION STATION PROJECT
OFFSITE STRUCTURES
RW #7
GENERAL PLAN

CONTRACT NO PS2415-3172
DRAWING NO EWP3-329
REV 0
SCALE 1"=30'
SHEET NO 78

Plot Driver=$PLTDRVS$ Pentable=PlotStamp.tbl USER = gwei 3:37:40 AM 2/21/2025 $FILE$

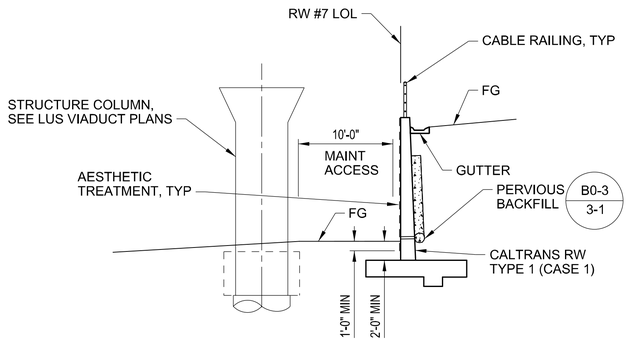

SECTION - RW #7 (A)

1/8" = 1'-0"

EWP3-330

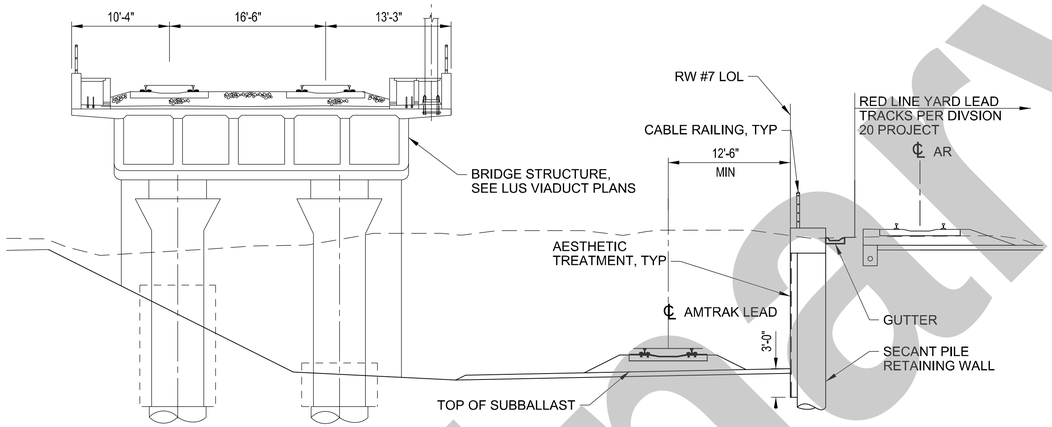

SECTION - RW #7 (C)

1/8" = 1'-0"

EWP3-330

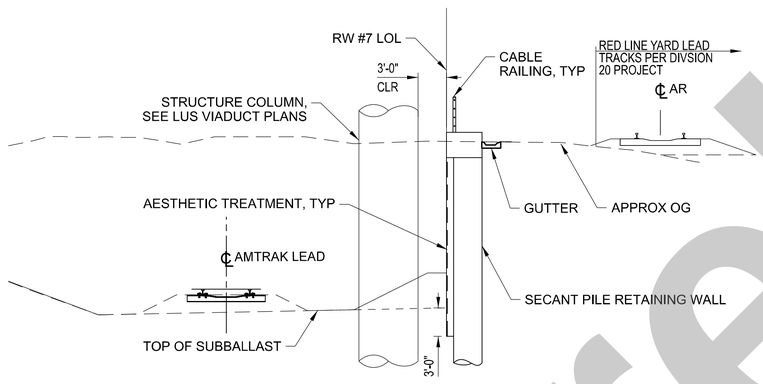

SECTION - RW #7 (B)

1/8" = 1'-0"

EWP3-330

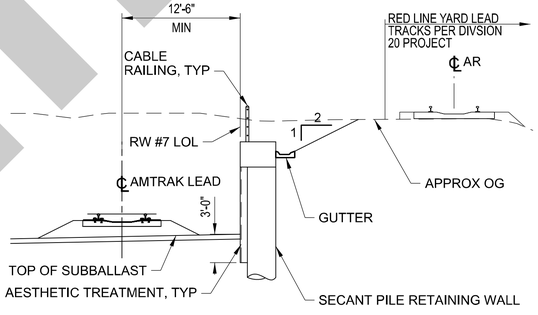

SECTION - RW #7 (D)

1/8" = 1'-0"

EWP3-330

NOTES:

1. SEE DRANAGE PLANS FOR UNDERDRAIN DETAILS.
2. RW #7 CIDH PILE SECANT WALL:
3. SEE TRACK PLANS FOR DETAILS OF PROPOSED TRACK CONSTRUCTION.

Preliminary

NOT FOR CONSTRUCTION

THE PREPARATION OF THIS DRAWING HAS BEEN FINANCED IN PART THROUGH A GRANT FROM THE U.S. DEPARTMENT OF TRANSPORTATION, FEDERAL TRANSIT ADMINISTRATION (FTA), UNDER THE FEDERAL TRANSIT ACT OF 1964, AS AMENDED, AND IN PART BY THE TAXES OF THE CITIZENS OF LOS ANGELES COUNTY AND OF THE STATE OF CALIFORNIA.

REV	DATE	BY	APP	REG NO	EXPIRES	SEAL HOLDER	DESCRIPTION

DESIGNED BY E. YUE
DRAWN BY G. WEI
CHECKED BY G. DREESZEN
IN CHARGE T. KIM
DATE 2/21/2025

Metro
LOS ANGELES COUNTY
METROPOLITAN TRANSPORTATION AUTHORITY
INNOVATIVE DESIGN COMPANY
HDR ENGINEERING
350 S. GRAND AVENUE
SUITE 3200
LOS ANGELES, CA 90071
(213) 236-0800

LINK UNION STATION PROJECT
OFFSITE STRUCTURES
RW #7
GENERAL SECTIONS

CONTRACT NO PS2415-3172
DRAWING NO EWP3-330
REV 0
SCALE 1/8"=1'-0"
SHEET NO 79

Plot Driver=$PLTDRVS$ Pentable=PlotStamp.tbl USER = gwei 3:37:53 AM 2/21/2025 $FILE$

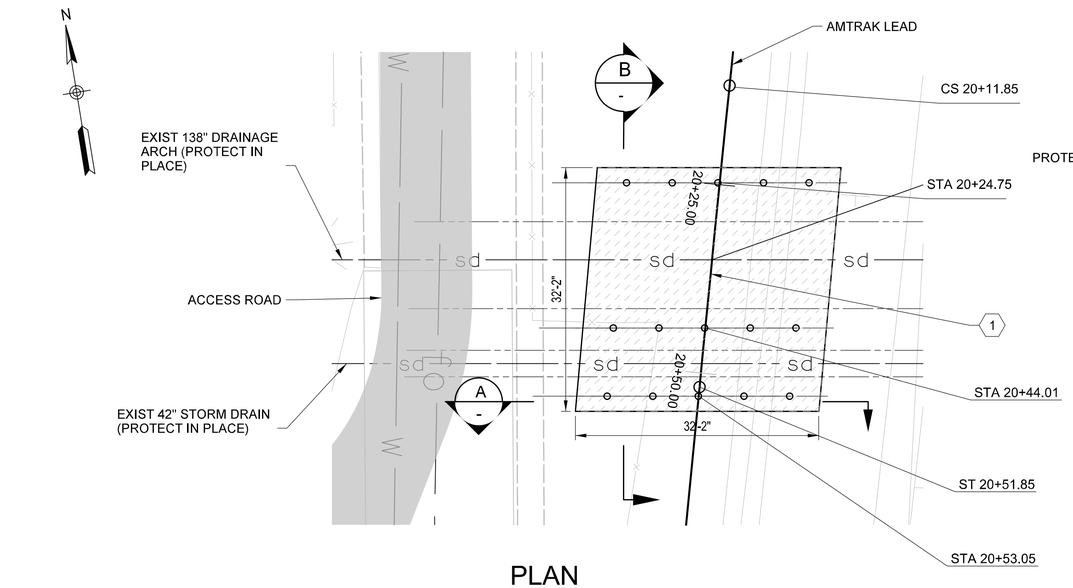

PLAN

SCALE: 1"= 10'

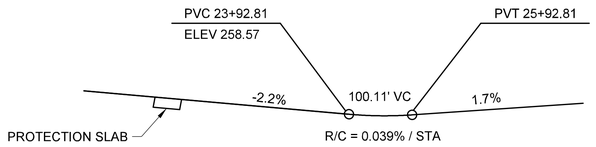

PROFILE GRADE

CURVE DATA								
NO.	RADIUS	△	LENGTH	TANGENT	Ls	Ea	Eu	V
1	4330'	01°23'00"	105'	_	40'	0.00"	1.4'	35MPH

NOTES:

1. SEE UTILITY PLANS FOR EXISTING UTILITIES.
2. SEE DRAINAGE PLANS FOR UNDERDRAIN LOCATIONS.
3. SEE TRACK PLANS FOR DETAILS OF PROPOSED TRACK CONSTRUCTION.
4. CONTRACTOR TO PROVIDE ANY SHORING AND EXCAVATION DESIGN REQUIRED IN ORDER TO EXCAVATE AND CONSTRUCT THE PROTECTION SLAB
5. SEE TYPICAL SECTIONS SHEET FOR REINFORCING DETAILS
6. EXISITING COLA 42" CONCRETE PIPE TO HAVE STRUCTURAL LINER INSTALLED PRIOR TO AMTRAK LEAD ACTIVE SERVICE. SEE UTILITY PLANS FOR ADDITIONAL INFORMATION.

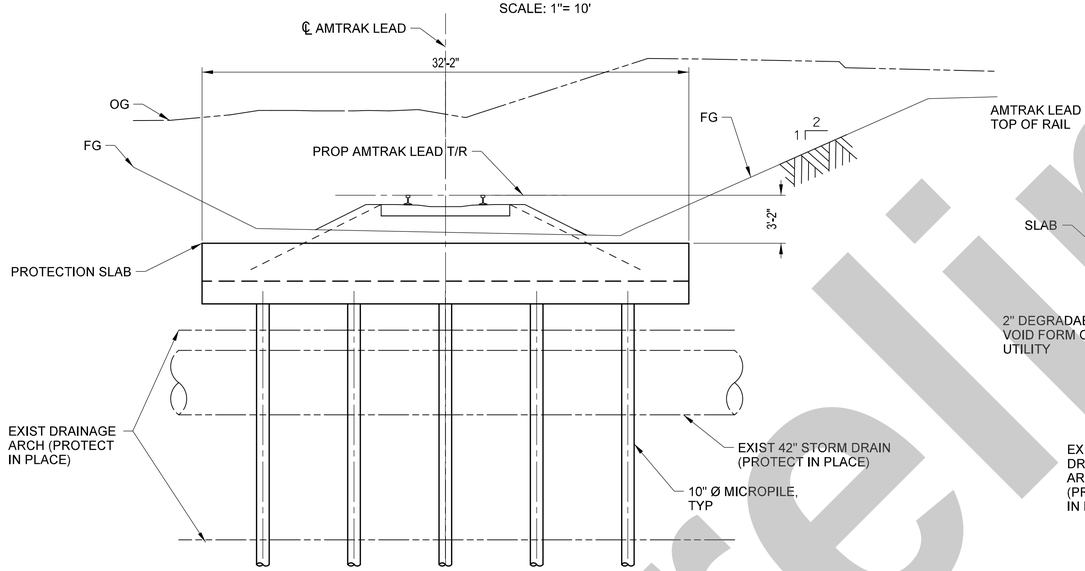

SECTION A

SCALE: 1"= 5'

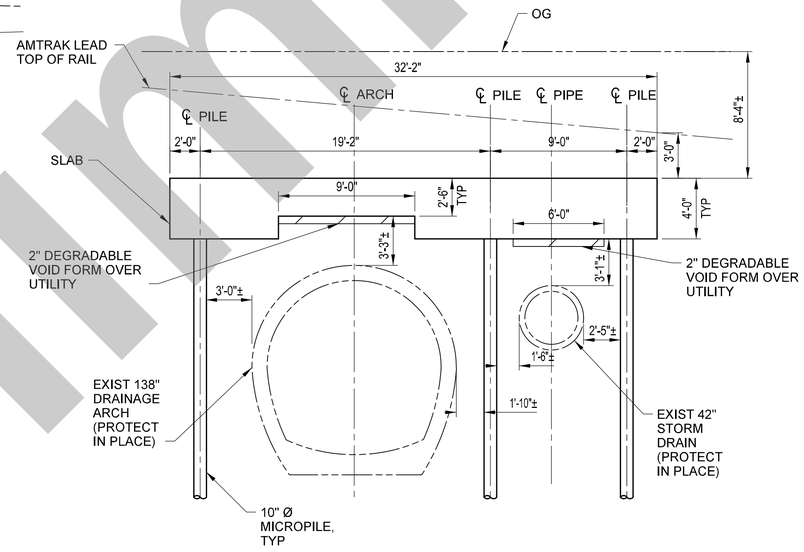

SECTION B

SCALE: 1"= 5'

NOT FOR CONSTRUCTION

THE PREPARATION OF THIS DRAWING HAS BEEN FINANCED IN PART THROUGH A GRANT FROM THE U.S. DEPARTMENT OF TRANSPORTATION, FEDERAL TRANSIT ADMINISTRATION (FTA), UNDER THE FEDERAL TRANSIT ACT OF 1964, AS AMENDED, AND IN PART BY THE TAXES OF THE CITIZENS OF LOS ANGELES COUNTY AND OF THE STATE OF CALIFORNIA.

REV	DATE	BY	APP	REG NO	EXPIRES	SEAL HOLDER	DESCRIPTION

DESIGNED BY	E. YUE
DRAWN BY	G. WEI
CHECKED BY	G. DREESZEN
IN CHARGE	T. KIM
DATE	2/21/2025

Metro
LOS ANGELES COUNTY METROPOLITAN TRANSPORTATION AUTHORITY
INNOVATIVE DESIGN COMPANY
HDR ENGINEERING
350 S. GRAND AVENUE
FORTY-EIGHTH FL
LOS ANGELES, CA 90071
(213) 239-5800

LINK UNION STATION PROJECT

OFFSITE STRUCTURES

DUCOMMUN ST STORM DRAIN PROTECTION SLAB GENERAL PLAN

CONTRACT NO	PS2415-3172
DRAWING NO	EWP3-343
REV	0
SCALE	1"=10'
SHEET NO	80

Preliminary

Plot Driver=$PLTDRV$$ Pentable=PlotStamp.tbl USER = GabrielHowdf69:11 AM 2/19/2025 $FILE$

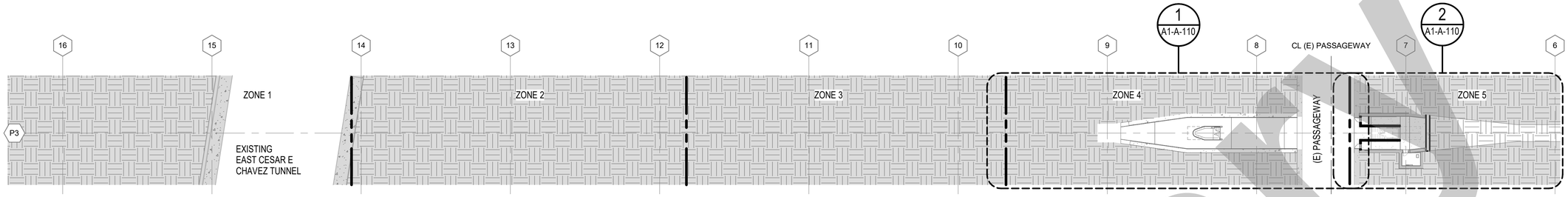

OVERALL PLAN - PLATFORM 3 - PASSAGEWAY

1" = 30'-0"

1 A1-A-104

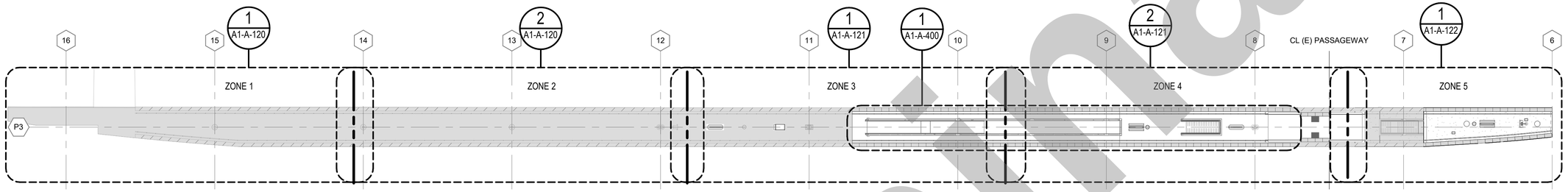

OVERALL PLAN - PLATFORM 3

1" = 30'-0"

2 A1-A-104

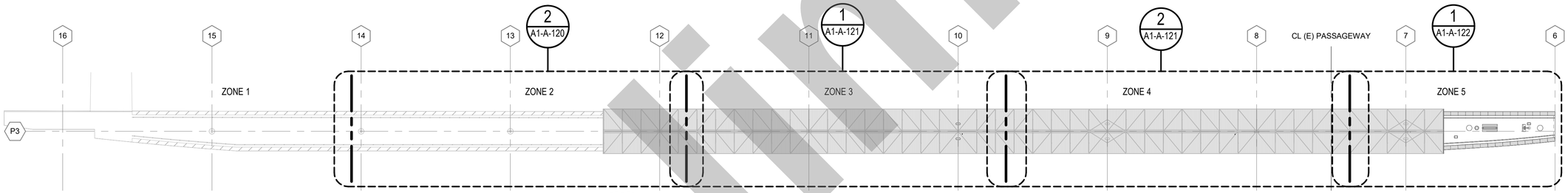

OVERALL ROOF PLAN - PLATFORM 3

1" = 30'-0"

3 A1-A-104

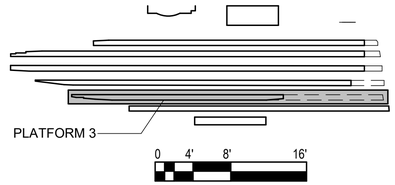

NOT FOR CONSTRUCTION

Preliminary

THE PREPARATION OF THIS DRAWING HAS BEEN FINANCED IN PART THROUGH A GRANT FROM THE U.S. DEPARTMENT OF TRANSPORTATION, FEDERAL TRANSIT ADMINISTRATION (FTA), UNDER THE FEDERAL TRANSIT ACT OF 1964, AS AMENDED, AND IN PART BY THE TAXES OF THE CITIZENS OF LOS ANGELES COUNTY AND OF THE STATE OF CALIFORNIA.

REV	DATE	BY	APP	REG NO	EXPIRES	SEAL HOLDER	DESCRIPTION

DESIGNED BY N. GANGE
DRAWN BY D. MURPHY
CHECKED BY D. VAZQUEZ
IN CHARGE T. KIM
DATE 2/21/2025

Metro
LOS ANGELES COUNTY
METROPOLITAN TRANSPORTATION AUTHORITY

V C A ENGINEERS INC
2151 Michelson Dr. #240
Irvine, CA 92612
Tel. 949.679.0870
Fax. 949.679.9370
Project No. C184

HDR ENGINEERING
350 S GRAND AVENUE
SUITE 2900
LOS ANGELES, CA 90071
(213) 239-5800

LINK UNION STATION PROJECT
EARLY WORKS PACKAGE 3 - PHASE A1

ARCHITECTURE
OVERALL PLANS - PLATFORM 3

CONTRACT NO PS2415-3172
DRAWING NO A1-A-104
REV 0
SCALE 1" = 30'-0"
SHEET NO 81

Autodesk Docs://11004870_LINK_USA-LUS-220-CONTAINER_PHASE_A.rvt
2/19/2025 10:36:08 AM

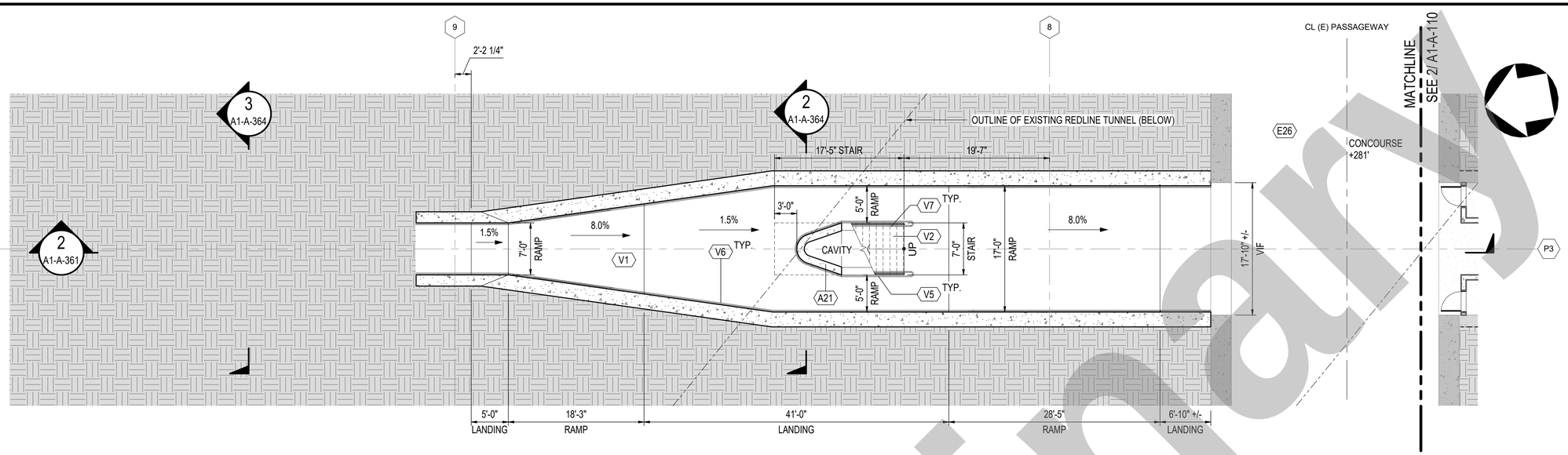

ENLARGED PLAN - PLATFORM 3 - PASSAGEWAY - ZONE 4

1/8" = 1'-0"

1
A1-A-110

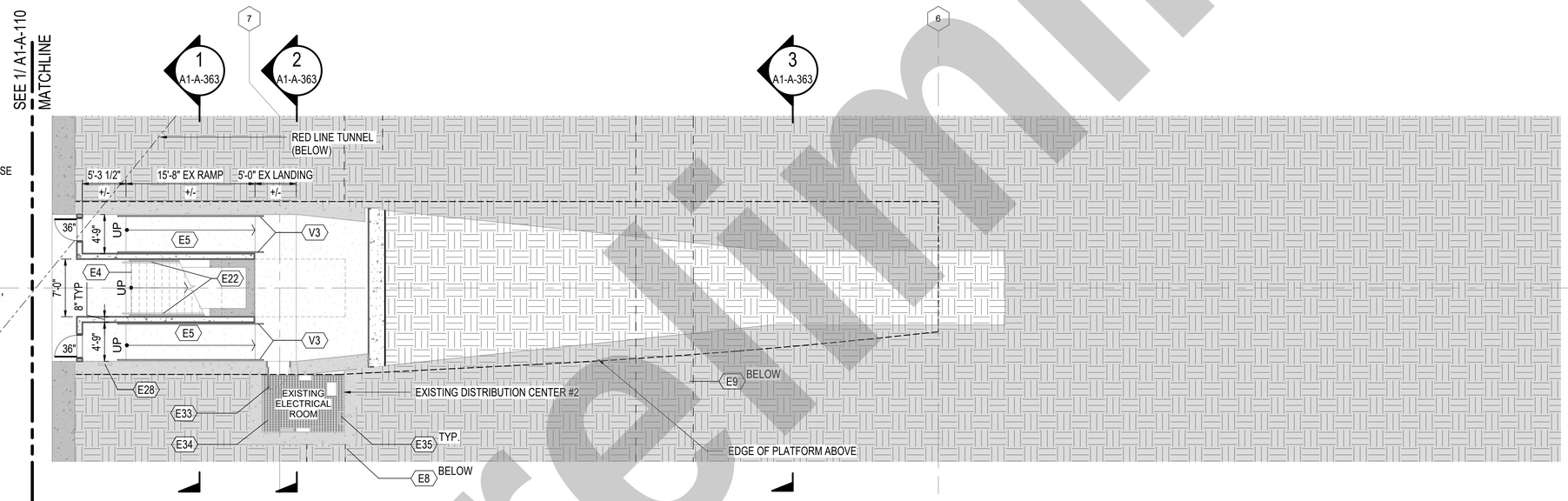

ENLARGED PLAN - PLATFORM 3 - PASSAGEWAY - ZONE 5

1/8" = 1'-0"

2
A1-A-110

GENERAL NOTES

1. EXISTING PASSAGEWAY TUNNEL TO REMAIN IN SERVICE. CONTRACTOR TO PROVIDE PEDESTRIAN PROTECTION AGAINST ALL HAZARDS. PEDESTRIAN PROTECTION SHALL CONFORM TO ALL APPLICABLE RULES AND REGULATIONS.
2. FOR DETAILS AND DIMENSIONS, REFER TO METRO RAIL STANDARD DRAWINGS FOR NON-PLATFORM AREAS.
3. FOR LEVEL DATUMS, SEE CIVIL DRAWINGS.
4. FOR DETAILS OF THE FIRE ACCESS ROAD, SEE CIVIL DRAWINGS.
5. FOR DETAILS OF TRACK ALIGNMENT, SEE TRACK DRAWINGS.
6. FOR DRAINAGE DETAILS, SEE DRAINAGE/UTILITY DRAWINGS.
7. FOR EXISTING CONDITIONS, SEE METRO RAIL PROJECT CONTRACT A135 REFERENCE DRAWINGS.
8. SALVAGE OF CANOPY TO BE COORDINATED WITH METRO.
9. THE DIMENSION OF CENTERLINE TRACK TO EDGE OF PLATFORM IS THE CRITICAL DIMENSION. ALL EXISTING PLATFORM DIMENSIONS ARE TO BE VERIFIED BY THE CONTRACTOR IN THE FIELD.
10. PROVIDE DETECTABLE WARNING TILE ON EACH SIDE OF PLATFORM AND ON EACH EDGE CONDITION OF DESIGNATED SUBSTATION AREA.
11. REFERENCE STRUCTURAL FOR CANOPY FRAMING AND DEMO EXTENT.
12. FOR CONCRETE WORK, REFER TO THE ON-SITE STRUCTURAL SET.
13. CONTRACTOR TO VERIFY ALL MEASUREMENTS TO EXISTING INFRASTRUCTURE IN FIELD.

PLAN GRAPHIC LEGEND

- EXISTING TO REMAIN
- EARTH
- CONCRETE
- STRUCTURE BELOW
- STRUCTURE ABOVE
- ON-SITE CIVIL IMPROVEMENT
- EXISTING TACTILE WARNING SURFACE
- TACTILE WARNING SURFACE AT PLATFORM EDGE
- TRACK CENTERLINE

SHEET KEYNOTES

⬡	SYMBOL
A21	CAST-IN-PLACE CONCRETE WALLS BELOW STAIR. SEE STRUCTURAL DRAWINGS.
E4	EXISTING STAIR.
E5	EXISTING RAMP.
E8	EXISTING DUCT BANK. SEE UTILITY DRAWINGS.
E9	EXISTING UTILITY TUNNEL. SEE UTILITY DRAWINGS.
E22	EXISTING GUARDRAIL WITH POST-MOUNTED HANDRAIL.
E26	EXISTING PASSAGEWAY TUNNEL
E28	EXISTING ELECTRICAL PANEL. SEE ELECTRICAL DRAWINGS.
E33	EXISTING DOOR AND FRAME.
E34	EXISTING GRATE FLOORING.
E35	EXISTING ELECTRICAL EQUIPMENT. SEE ELECTRICAL DRAWINGS.
V1	CAST-IN-PLACE CONCRETE RAMP AND LANDINGS
V2	CAST-IN-PLACE CONCRETE STAIR
V3	WALL-MOUNTED HANDRAIL
V5	POST-MOUNTED HANDRAIL
V6	WALL-MOUNTED ILLUMINATED HANDRAIL. SEE ELECTRICAL DRAWINGS.
V7	STAIR -MOUNTED GUARDRAIL WITH POST-MOUNTED HANDRAIL.

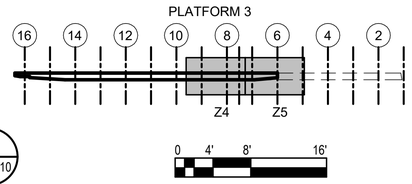

NOT FOR CONSTRUCTION

Preliminary

THE PREPARATION OF THIS DRAWING HAS BEEN FINANCED IN PART THROUGH A GRANT FROM THE U.S. DEPARTMENT OF TRANSPORTATION, FEDERAL TRANSIT ADMINISTRATION (FTA), UNDER THE FEDERAL TRANSIT ACT OF 1964, AS AMENDED, AND IN PART BY THE TAXES OF THE CITIZENS OF LOS ANGELES COUNTY AND OF THE STATE OF CALIFORNIA.

REV	DATE	BY	APP	REG NO	EXPIRES	SEAL HOLDER	DESCRIPTION

DESIGNED BY N. GANGE
DRAWN BY D. MURPHY
CHECKED BY D. VAZQUEZ
IN CHARGE T. KIM
DATE 2/21/2025

Metro
LOS ANGELES COUNTY
METROPOLITAN TRANSPORTATION AUTHORITY

HDR
HDR ENGINEERING INC.
HDR LOS ANGELES
350 S GRAND AVE, SUITE 2900
LOS ANGELES, CA 90071

LINK UNION STATION PROJECT
EARLY WORKS PACKAGE 3 - PHASE A1
ARCHITECTURE
ENLARGED PLANS - PASSAGEWAY

CONTRACT NO PS2415-3172
DRAWING NO A1-A-110
REV 0
SCALE As indicated
SHEET NO 82

2/19/2025 10:38:33 AM Autodesk Docs://I004470_LINK_USA-LUS-ZIG-CONTAINER_PHASE_A.rvt

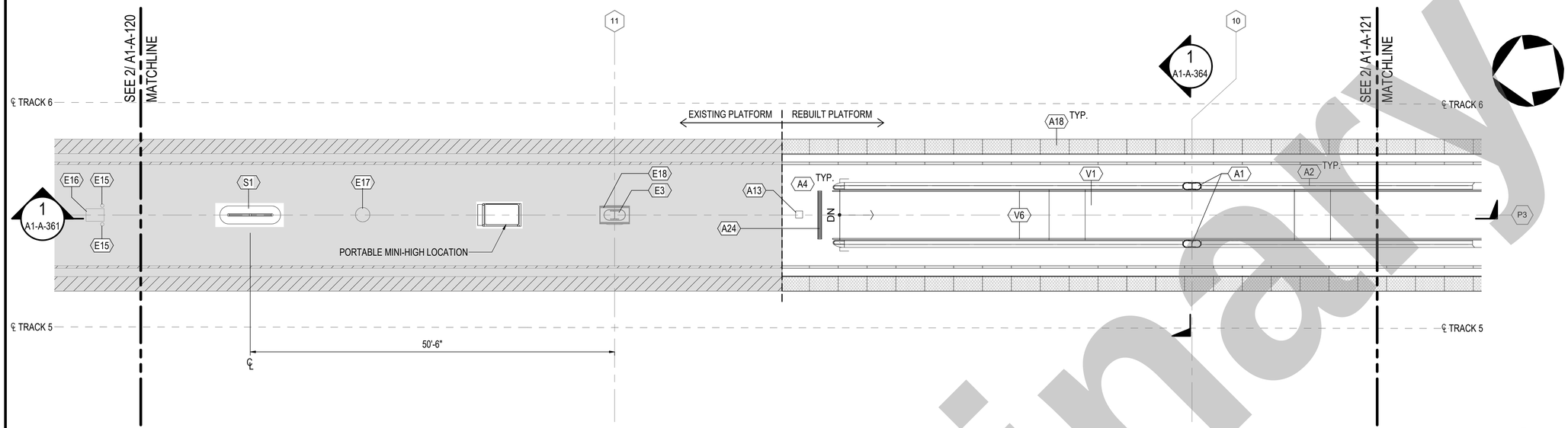

ENLARGED PLAN - PLATFORM 3 - ZONE 3

1/8" = 1'-0"

1
A1-A-121

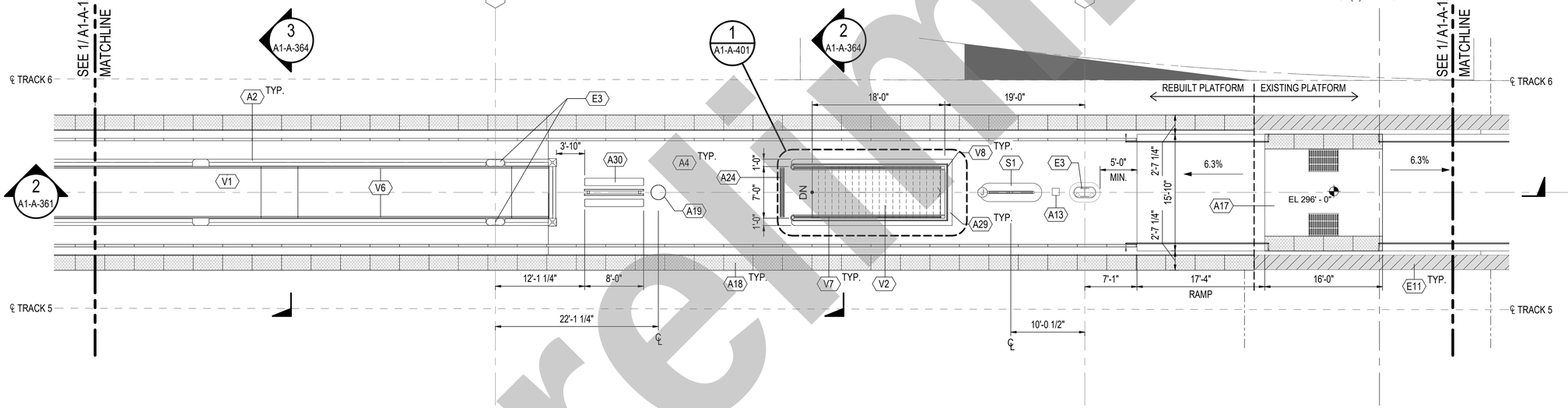

ENLARGED PLAN - PLATFORM 3 - ZONE 4

1/8" = 1'-0"

2
A1-A-121

GENERAL NOTES

1. EXISTING PASSAGEWAY TUNNEL TO REMAIN IN SERVICE. CONTRACTOR TO PROVIDE PEDESTRIAN PROTECTION AGAINST ALL HAZARDS. PEDESTRIAN PROTECTION SHALL CONFORM TO ALL APPLICABLE RULES AND REGULATIONS.
2. FOR DETAILS AND DIMENSIONS, REFER TO METRO RAIL STANDARD DRAWINGS FOR NON-PLATFORM AREAS.
3. FOR LEVEL DATUMS, SEE CIVIL DRAWINGS.
4. FOR DETAILS OF THE FIRE ACCESS ROAD, SEE CIVIL DRAWINGS.
5. FOR DETAILS OF TRACK ALIGNMENT, SEE TRACK DRAWINGS.
6. FOR DRAINAGE DETAILS, SEE DRAINAGE/UTILITY DRAWINGS.
7. FOR EXISTING CONDITIONS, SEE METRO RAIL PROJECT CONTRACT A135 REFERENCE DRAWINGS.
8. SALVAGE OF CANOPY TO BE COORDINATED WITH METRO.
9. THE DIMENSION OF CENTERLINE TRACK TO EDGE OF PLATFORM IS THE CRITICAL DIMENSION. ALL EXISTING PLATFORM DIMENSIONS ARE TO BE VERIFIED BY THE CONTRACTOR IN THE FIELD.
10. PROVIDE DETECTABLE WARNING TILE ON EACH SIDE OF PLATFORM AND ON EACH EDGE CONDITION OF DESIGNATED SUBSTATION AREA.
11. REFERENCE STRUCTURAL FOR CANOPY FRAMING AND DEMO EXTENT.
12. FOR CONCRETE WORK, REFER TO THE ON-SITE STRUCTURAL SET.
13. CONTRACTOR TO VERIFY ALL MEASUREMENTS TO EXISTING INFRASTRUCTURE IN FIELD.

PLAN GRAPHIC LEGEND

- EXISTING TO REMAIN
- EARTH
- CONCRETE
- STRUCTURE BELOW
- STRUCTURE ABOVE
- ON-SITE CIVIL IMPROVEMENT
- EXISTING TACTILE WARNING SURFACE
- TACTILE WARNING SURFACE AT PLATFORM EDGE
- TRACK CENTERLINE

SHEET KEYNOTES

⬡	SYMBOL
A1	CANOPY COLUMNS. SEE STRUCTURAL DRAWINGS
A2	PARTIAL HEIGHT CONCRETE WALL/GUARD. SEE STRUCTURAL DRAWINGS.
A4	BROOM FINISH ON CONCRETE SURFACE
A13	RECESSED HYDRANT. SEE PLUMBING DRAWINGS.
A17	PRE-ENGINEERED ALUMINUM MINI-HIGH WITH RAILINGS.
A18	END OF PLATFORM TACTILE WARNING STRIP TO RUN FULL LENGTH OF PLATFORM.
A19	FLOOR-MOUNTED TRASH RECEPTACLE (DHS COMPLIANT).
A24	TRENCH DRAIN. SEE PLUMBING DRAWINGS.
A29	CONCRETE CURB.
A30	PLATFORM-MOUNTED DOUBLE SIDED BENCH TO MATCH EXISTING.
E3	EXISTING CANOPY COLUMN.
E11	EXISTING 2'W TACTILE WARNING STRIP.
E15	EXISTING BOLLARD.
E16	EXISTING FLOOR-MOUNTED SIGNAL CABINET.
E17	EXISTING FLOOR-MOUNTED TRASH RECEPTACLE.
E18	EXISTING COLUMN-MOUNTED MAP CASE.
S1	CURB-MOUNTED INFORMATION PANELS/SIGNAGE.
V1	CAST-IN-PLACE CONCRETE RAMP AND LANDINGS
V2	CAST-IN-PLACE CONCRETE STAIR
V6	WALL-MOUNTED ILLUMINATED HANDRAIL. SEE ELECTRICAL DRAWINGS.
V7	STAIR -MOUNTED GUARDRAIL WITH POST-MOUNTED HANDRAIL.
V8	CURB-MOUNTED GUARDRAIL.

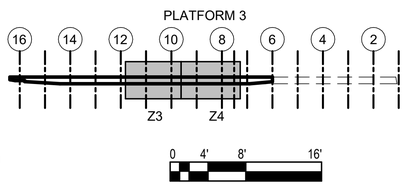

NOT FOR CONSTRUCTION

Preliminary

THE PREPARATION OF THIS DRAWING HAS BEEN FINANCED IN PART THROUGH A GRANT FROM THE U.S. DEPARTMENT OF TRANSPORTATION, FEDERAL TRANSIT ADMINISTRATION (FTA), UNDER THE FEDERAL TRANSIT ACT OF 1964, AS AMENDED, AND IN PART BY THE TAXES OF THE CITIZENS OF LOS ANGELES COUNTY AND OF THE STATE OF CALIFORNIA.

REV	DATE	BY	APP	REG NO	EXPIRES	SEAL HOLDER	DESCRIPTION

DESIGNED BY N. GANGE
DRAWN BY D. MURPHY
CHECKED BY D. VAZQUEZ
IN CHARGE T. KIM
DATE 2/21/2025

LOS ANGELES COUNTY METROPOLITAN TRANSPORTATION AUTHORITY

HDR ENGINEERING INC.
HDR LOS ANGELES
350 S GRAND AVE, SUITE 2900
LOS ANGELES, CA 90071

LINK UNION STATION PROJECT
EARLY WORKS PACKAGE 3 - PHASE A1

ARCHITECTURE
ENLARGED PLANS - PLATFORM 3
SHEET 2 OF 3

CONTRACT NO PS2415-3172
DRAWING NO A1-A-121
REV 0
SCALE As indicated
SHEET NO 83

2/19/2025 10:57:52 AM Autodesk Docs://I004470_LINK_USA-LUS-ZG-CONTAINER_PHASE_A.rvt

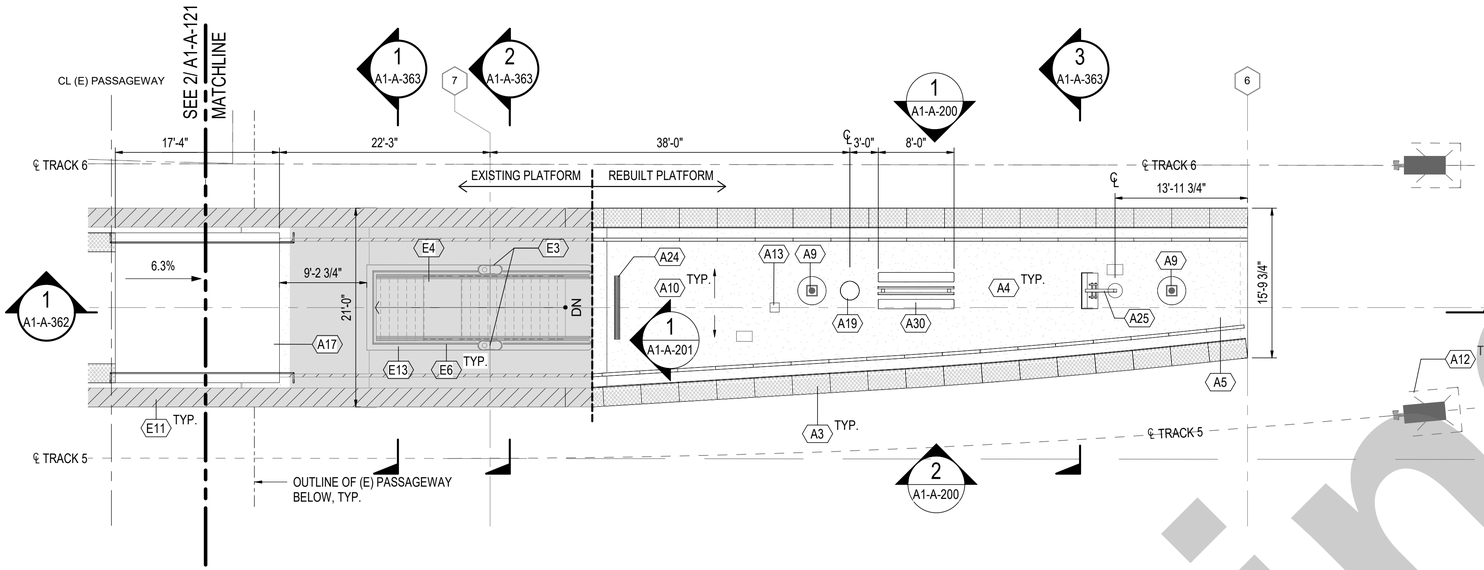

ENLARGED PLAN - PLATFORM 3 - ZONE 5

1/8" = 1'-0"

1 A1-A-122

GENERAL NOTES

1. EXISTING PASSAGEWAY TUNNEL TO REMAIN IN SERVICE. CONTRACTOR TO PROVIDE PEDESTRIAN PROTECTION AGAINST ALL HAZARDS. PEDESTRIAN PROTECTION SHALL CONFORM TO ALL APPLICABLE RULES AND REGULATIONS.
2. FOR DETAILS AND DIMENSIONS, REFER TO METRO RAIL STANDARD DRAWINGS FOR NON-PLATFORM AREAS.
3. FOR LEVEL DATUMS, SEE CIVIL DRAWINGS.
4. FOR DETAILS OF THE FIRE ACCESS ROAD, SEE CIVIL DRAWINGS.
5. FOR DETAILS OF TRACK ALIGNMENT, SEE TRACK DRAWINGS.
6. FOR DRAINAGE DETAILS, SEE DRAINAGE/UTILITY DRAWINGS.
7. FOR EXISTING CONDITIONS, SEE METRO RAIL PROJECT CONTRACT A135 REFERENCE DRAWINGS.
8. SALVAGE OF CANOPY TO BE COORDINATED WITH METRO.
9. THE DIMENSION OF CENTERLINE TRACK TO EDGE OF PLATFORM IS THE CRITICAL DIMENSION. ALL EXISTING PLATFORM DIMENSIONS ARE TO BE VERIFIED BY THE CONTRACTOR IN THE FIELD.
10. PROVIDE DETECTABLE WARNING TILE ON EACH SIDE OF PLATFORM AND ON EACH EDGE CONDITION OF DESIGNATED SUBSTATION AREA.
11. REFERENCE STRUCTURAL FOR CANOPY FRAMING AND DEMO EXTENT.
12. FOR CONCRETE WORK, REFER TO THE ON-SITE STRUCTURAL SET.
13. CONTRACTOR TO VERIFY ALL MEASUREMENTS TO EXISTING INFRASTRUCTURE IN FIELD.

PLAN GRAPHIC LEGEND

- EXISTING TO REMAIN
- EARTH
- CONCRETE
- STRUCTURE BELOW
- STRUCTURE ABOVE
- ON-SITE CIVIL IMPROVEMENT
- EXISTING TACTILE WARNING SURFACE
- TACTILE WARNING SURFACE AT PLATFORM EDGE
- TRACK CENTERLINE

SHEET KEYNOTES

⬡	SYMBOL
A3	2'W TACTILE WARNING STRIP
A4	BROOM FINISH ON CONCRETE SURFACE
A5	REBUILT PORTION OF PLATFORM. SEE STRUCTURAL DRAWINGS.
A9	POST-MOUNTED LIGHT FIXTURE. SEE ELECTRICAL DRAWINGS.
A10	PITCH NEW PORTION OF PLATFORM ALONG SAME RIDGE PROFILE AS THE EXISTING PLATFORM (MAX SLOPE 2%)
A12	RELOCATED BUMPER POST, SEE TRACK WORK DWGS FOR LOCATIONS.
A13	RECESSED HYDRANT. SEE PLUMBING DRAWINGS.
A17	PRE-ENGINEERED ALUMINUM MINI-HIGH WITH RAILINGS.
A19	FLOOR-MOUNTED TRASH RECEPTACLE (DHS COMPLIANT).
A24	TRENCH DRAIN. SEE PLUMBING DRAWINGS.
A25	REINSTALL EXISTING PLATFORM MESSAGE BOARD, SEE ELECTRICAL AND COMMS DRAWINGS.
A30	PLATFORM-MOUNTED DOUBLE SIDED BENCH TO MATCH EXISTING.
E3	EXISTING CANOPY COLUMN.
E4	EXISTING STAIR.
E6	EXISTING GUARDRAIL.
E11	EXISTING 2'W TACTILE WARNING STRIP.
E13	EXISTING CONCRETE CURB.

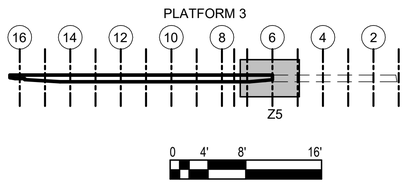

NOT FOR CONSTRUCTION

Preliminary

THE PREPARATION OF THIS DRAWING HAS BEEN FINANCED IN PART THROUGH A GRANT FROM THE U.S. DEPARTMENT OF TRANSPORTATION, FEDERAL TRANSIT ADMINISTRATION (FTA), UNDER THE FEDERAL TRANSIT ACT OF 1964, AS AMENDED, AND IN PART BY THE TAXES OF THE CITIZENS OF LOS ANGELES COUNTY AND OF THE STATE OF CALIFORNIA.

REV	DATE	BY	APP	REG NO	EXPIRES	SEAL HOLDER	DESCRIPTION

DESIGNED BY N. GANGE
DRAWN BY D. MURPHY
CHECKED BY D. VAZQUEZ
IN CHARGE T. KIM
DATE 2/21/2025

LOS ANGELES COUNTY METROPOLITAN TRANSPORTATION AUTHORITY

HDR ENGINEERING INC.
HDR LOS ANGELES
350 S GRAND AVE, SUITE 2900
LOS ANGELES, CA 90071

LINK UNION STATION PROJECT
EARLY WORKS PACKAGE 3 - PHASE A1

ARCHITECTURE
ENLARGED PLANS - PLATFORM 3
SHEET 3 OF 3

CONTRACT NO PS2415-3172
DRAWING NO A1-A-122
REV 0
SCALE As indicated
SHEET NO 84

2/19/2025 10:58:04 AM Autodesk Docs://11004870_LINK_USA/A1US-220-CONTAINER_PHASE_A.rvt

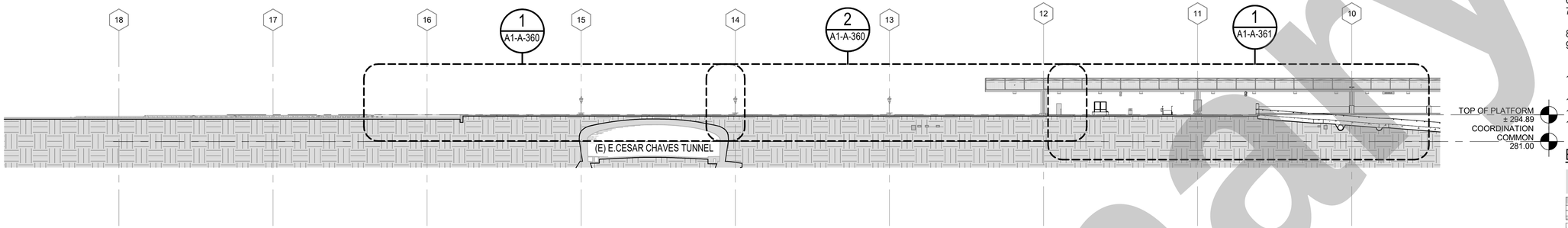

OVERALL SECTION - PLATFORM 3 - NORTH (ZONES 1, 2 & 3)

1" = 30'-0"

1 A1-A-300

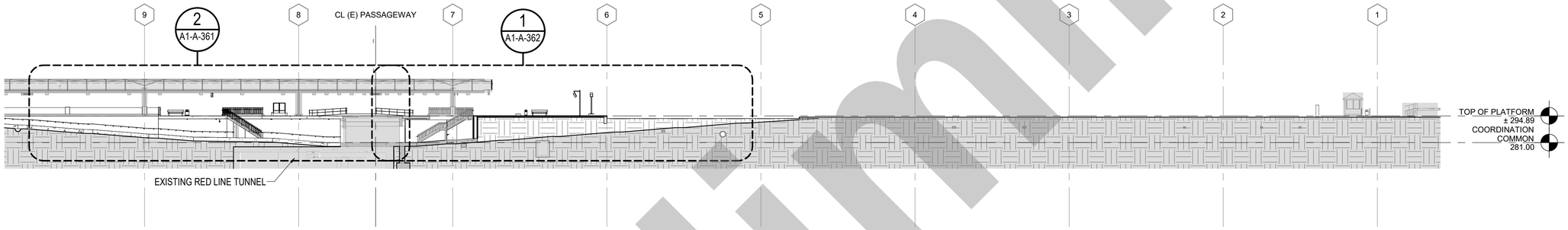

OVERALL SECTION - PLATFORM 3 - CENTER (ZONES 4 , 5, 6 & 7)

1" = 30'-0"

2 A1-A-300

GENERAL NOTES

1. EXISTING PASSAGEWAY TUNNEL TO REMAIN IN SERVICE. CONTRACTOR TO PROVIDE PEDESTRIAN PROTECTION AGAINST ALL HAZARDS. PEDESTRIAN PROTECTION SHALL CONFORM TO ALL APPLICABLE RULES AND REGULATIONS.
2. FOR DETAILS AND DIMENSIONS, REFER TO METRO RAIL STANDARD DRAWINGS FOR NON-PLATFORM AREAS.
3. FOR LEVEL DATUMS, SEE CIVIL DRAWINGS.
4. FOR DETAILS OF THE FIRE ACCESS ROAD, SEE CIVIL DRAWINGS.
5. FOR DETAILS OF TRACK ALIGNMENT, SEE TRACK DRAWINGS.
6. FOR DRAINAGE DETAILS, SEE DRAINAGE/UTILITY DRAWINGS.
7. FOR EXISTING CONDITIONS, SEE METRO RAIL PROJECT CONTRACT A135 REFERENCE DRAWINGS.
8. SALVAGE OF CANOPY TO BE COORDINATED WITH METRO.
9. THE DIMENSION OF CENTERLINE TRACK TO EDGE OF PLATFORM IS THE CRITICAL DIMENSION. ALL EXISTING PLATFORM DIMENSIONS ARE TO BE VERIFIED BY THE CONTRACTOR IN THE FIELD.
10. PROVIDE DETECTABLE WARNING TILE ON EACH SIDE OF PLATFORM AND ON EACH EDGE CONDITION OF DESIGNATED SUBSTATION AREA.
11. REFERENCE STRUCTURAL FOR CANOPY FRAMING AND DEMO EXTENT.
12. FOR CONCRETE WORK, REFER TO THE ON-SITE STRUCTURAL SET.
13. CONTRACTOR TO VERIFY ALL MEASUREMENTS TO EXISTING INFRASTRUCTURE IN FIELD.

ELEVATION / SECTION GRAPHIC LEGEND

- EXISTING TO REMAIN
- EARTH
- CONCRETE

0 15' 30' 60'

NOT FOR CONSTRUCTION

Preliminary

THE PREPARATION OF THIS DRAWING HAS BEEN FINANCED IN PART THROUGH A GRANT FROM THE U.S. DEPARTMENT OF TRANSPORTATION, FEDERAL TRANSIT ADMINISTRATION (FTA), UNDER THE FEDERAL TRANSIT ACT OF 1964, AS AMENDED, AND IN PART BY THE TAXES OF THE CITIZENS OF LOS ANGELES COUNTY AND OF THE STATE OF CALIFORNIA.

REV	DATE	BY	APP	REG NO	EXPIRES	SEAL HOLDER	DESCRIPTION

DESIGNED BY N. GANGE
DRAWN BY R. ZHANG
CHECKED BY D. VAZQUEZ
IN CHARGE T. KIM
DATE 2/21/2025

LOS ANGELES COUNTY METROPOLITAN TRANSPORTATION AUTHORITY

HDR ENGINEERING INC.
HDR LOS ANGELES
350 S GRAND AVE, SUITE 2900
LOS ANGELES, CA 90071

LINK UNION STATION PROJECT
EARLY WORKS PACKAGE 3 - PHASE A1

ARCHITECTURE
OVERALL SECTIONS

CONTRACT NO PS2415-3172
DRAWING NO A1-A-300
REV 0
SCALE As indicated
SHEET NO 85

2/14/2025 3:42:48 PM Autodesk Docs://17004870_LINK_USA-LUS-202-CONTAINER_PHASE_A.rvt

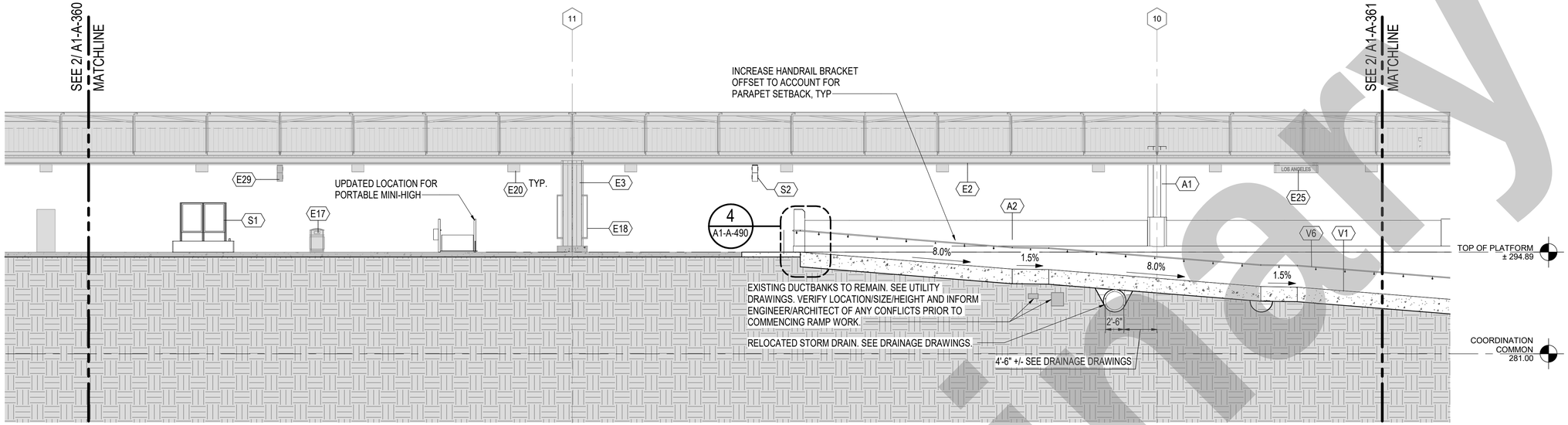

ENLARGED SECTION - PLATFORM 3 - ZONE 3

1/8" = 1'-0"

1
A1-A-361

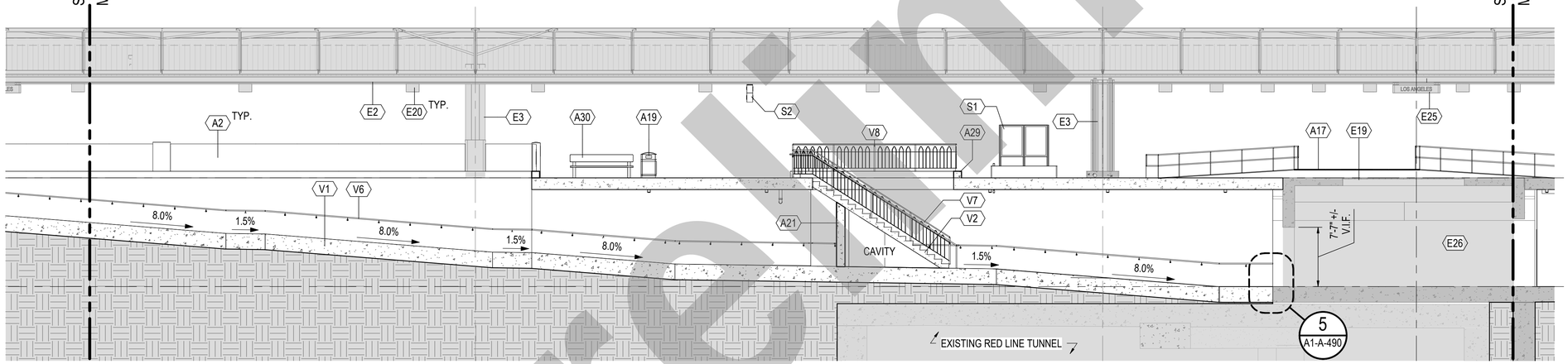

ENLARGED SECTION - PLATFORM 3 - ZONE 4

1/8" = 1'-0"

2
A1-A-361

GENERAL NOTES

1. EXISTING PASSAGEWAY TUNNEL TO REMAIN IN SERVICE. CONTRACTOR TO PROVIDE PEDESTRIAN PROTECTION AGAINST ALL HAZARDS. PEDESTRIAN PROTECTION SHALL CONFORM TO ALL APPLICABLE RULES AND REGULATIONS.
2. FOR DETAILS AND DIMENSIONS, REFER TO METRO RAIL STANDARD DRAWINGS FOR NON-PLATFORM AREAS.
3. FOR LEVEL DATUMS, SEE CIVIL DRAWINGS.
4. FOR DETAILS OF THE FIRE ACCESS ROAD, SEE CIVIL DRAWINGS.
5. FOR DETAILS OF TRACK ALIGNMENT, SEE TRACK DRAWINGS.
6. FOR DRAINAGE DETAILS, SEE DRAINAGE/UTILITY DRAWINGS.
7. FOR EXISTING CONDITIONS, SEE METRO RAIL PROJECT CONTRACT A135 REFERENCE DRAWINGS.
8. SALVAGE OF CANOPY TO BE COORDINATED WITH METRO.
9. THE DIMENSION OF CENTERLINE TRACK TO EDGE OF PLATFORM IS THE CRITICAL DIMENSION. ALL EXISTING PLATFORM DIMENSIONS ARE TO BE VERIFIED BY THE CONTRACTOR IN THE FIELD.
10. PROVIDE DETECTABLE WARNING TILE ON EACH SIDE OF PLATFORM AND ON EACH EDGE CONDITION OF DESIGNATED SUBSTATION AREA.
11. REFERENCE STRUCTURAL FOR CANOPY FRAMING AND DEMO EXTENT.
12. FOR CONCRETE WORK, REFER TO THE ON-SITE STRUCTURAL SET.
13. CONTRACTOR TO VERIFY ALL MEASUREMENTS TO EXISTING INFRASTRUCTURE IN FIELD.

ELEVATION / SECTION GRAPHIC LEGEND

- EXISTING TO REMAIN
- EARTH
- CONCRETE

SHEET KEYNOTES

	SYMBOL
A1	CANOPY COLUMNS. SEE STRUCTURAL DRAWINGS
A2	PARTIAL HEIGHT CONCRETE WALL/GUARD. SEE STRUCTURAL DRAWINGS.
A17	PRE-ENGINEERED ALUMINUM MINI-HIGH WITH RAILINGS.
A19	FLOOR-MOUNTED TRASH RECEPTACLE (DHS COMPLIANT).
A21	CAST-IN-PLACE CONCRETE WALLS BELOW STAIR. SEE STRUCTURAL DRAWINGS.
A29	CONCRETE CURB.
A30	PLATFORM-MOUNTED DOUBLE SIDED BENCH TO MATCH EXISTING.
E2	EXISTING CANOPY.
E3	EXISTING CANOPY COLUMN.
E17	EXISTING FLOOR-MOUNTED TRASH RECEPTACLE.
E18	EXISTING COLUMN-MOUNTED MAP CASE.
E19	EXISTING PLATFORM SKYLIGHT.
E20	EXISTING GUTTER-MOUNTED LIGHT FIXTURE.
E25	EXISTING GUTTER-MOUNTED STATION SIGNAGE.
E26	EXISTING PASSAGEWAY TUNNEL
E29	EXISTING CANOPY-MOUNTED DIRECTIONAL SIGNAGE W/ VMS AND STROBE. SEE COMMS DRAWINGS.
S1	CURB-MOUNTED INFORMATION PANELS/SIGNAGE.
S2	REINSTALLED CANOPY-MOUNTED DIRECTIONAL SIGNAGE W/ VMS AND STROBE. SEE COMMS DRAWINGS. MODIFY LETTERING AS NEEDED FOR NEW LOCATION.
V1	CAST-IN-PLACE CONCRETE RAMP AND LANDINGS
V2	CAST-IN-PLACE CONCRETE STAIR
V6	WALL-MOUNTED ILLUMINATED HANDRAIL. SEE ELECTRICAL DRAWINGS.
V7	STAIR -MOUNTED GUARDRAIL WITH POST-MOUNTED HANDRAIL.
V8	CURB-MOUNTED GUARDRAIL.

0 4' 8' 16'

NOT FOR CONSTRUCTION

Preliminary

THE PREPARATION OF THIS DRAWING HAS BEEN FINANCED IN PART THROUGH A GRANT FROM THE U.S. DEPARTMENT OF TRANSPORTATION, FEDERAL TRANSIT ADMINISTRATION (FTA), UNDER THE FEDERAL TRANSIT ACT OF 1964, AS AMENDED, AND IN PART BY THE TAXES OF THE CITIZENS OF LOS ANGELES COUNTY AND OF THE STATE OF CALIFORNIA.

REV	DATE	BY	APP	REG NO	EXPIRES	SEAL HOLDER	DESCRIPTION

DESIGNED BY	N. GANGE
DRAWN BY	R. ZHANG
CHECKED BY	D. VAZQUEZ
IN CHARGE	T. KIM
DATE	2/21/2025

LOS ANGELES COUNTY METROPOLITAN TRANSPORTATION AUTHORITY

HDR ENGINEERING INC.
HDR LOS ANGELES
350 S GRAND AVE, SUITE 2900
LOS ANGELES, CA 90071

LINK UNION STATION PROJECT
EARLY WORKS PACKAGE 3 - PHASE A1

ARCHITECTURE
ENLARGED SECTIONS - PLATFORM 3
SHEET 2 OF 5

CONTRACT NO	PS2415-3172
DRAWING NO	A1-A-361
REV	0
SCALE	AS NOTED
SHEET NO	86

Autodesk Docs://11004870_LINK_USA-LUS-202-CONTAINER_PHASE_A.rvt
2/14/2025 3:43:01 PM

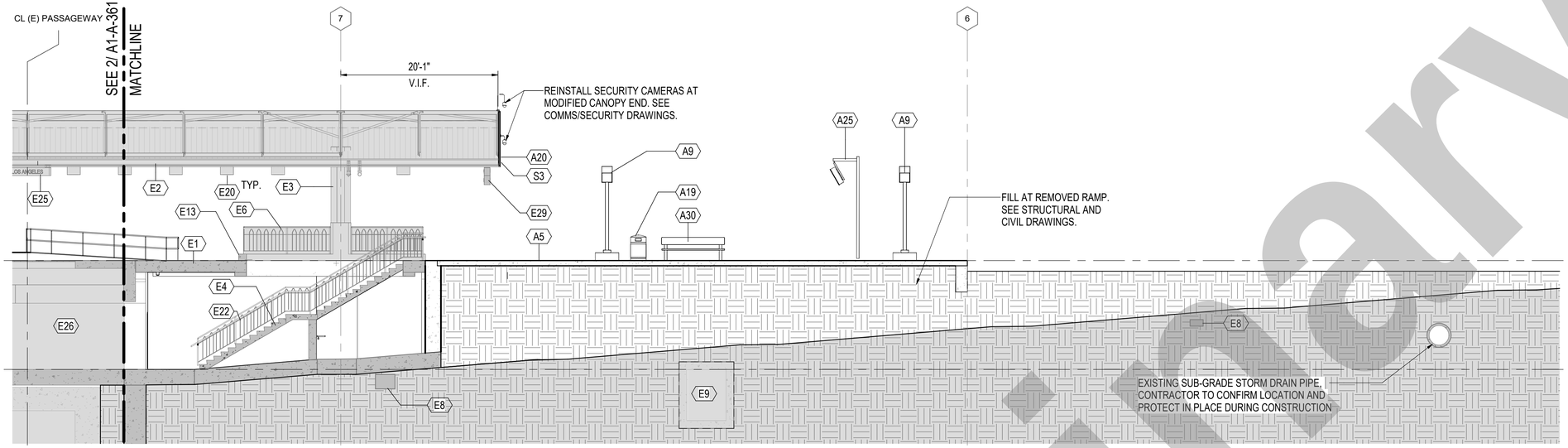

ENLARGED SECTION - PLATFORM 3 - ZONE 5

1/8" = 1'-0"

1 / A1-A-362

GENERAL NOTES

1. EXISTING PASSAGEWAY TUNNEL TO REMAIN IN SERVICE. CONTRACTOR TO PROVIDE PEDESTRIAN PROTECTION AGAINST ALL HAZARDS. PEDESTRIAN PROTECTION SHALL CONFORM TO ALL APPLICABLE RULES AND REGULATIONS.
2. FOR DETAILS AND DIMENSIONS, REFER TO METRO RAIL STANDARD DRAWINGS FOR NON-PLATFORM AREAS.
3. FOR LEVEL DATUMS, SEE CIVIL DRAWINGS.
4. FOR DETAILS OF THE FIRE ACCESS ROAD, SEE CIVIL DRAWINGS.
5. FOR DETAILS OF TRACK ALIGNMENT, SEE TRACK DRAWINGS.
6. FOR DRAINAGE DETAILS, SEE DRAINAGE/UTILITY DRAWINGS.
7. FOR EXISTING CONDITIONS, SEE METRO RAIL PROJECT CONTRACT A135 REFERENCE DRAWINGS.
8. SALVAGE OF CANOPY TO BE COORDINATED WITH METRO.
9. THE DIMENSION OF CENTERLINE TRACK TO EDGE OF PLATFORM IS THE CRITICAL DIMENSION. ALL EXISTING PLATFORM DIMENSIONS ARE TO BE VERIFIED BY THE CONTRACTOR IN THE FIELD.
10. PROVIDE DETECTABLE WARNING TILE ON EACH SIDE OF PLATFORM AND ON EACH EDGE CONDITION OF DESIGNATED SUBSTATION AREA.
11. REFERENCE STRUCTURAL FOR CANOPY FRAMING AND DEMO EXTENT.
12. FOR CONCRETE WORK, REFER TO THE ON-SITE STRUCTURAL SET.
13. CONTRACTOR TO VERIFY ALL MEASUREMENTS TO EXISTING INFRASTRUCTURE IN FIELD.

ELEVATION / SECTION GRAPHIC LEGEND

- EXISTING TO REMAIN
- EARTH
- CONCRETE

SHEET KEYNOTES

	SYMBOL
A5	REBUILT PORTION OF PLATFORM. SEE STRUCTURAL DRAWINGS.
A9	POST-MOUNTED LIGHT FIXTURE. SEE ELECTRICAL DRAWINGS.
A19	FLOOR-MOUNTED TRASH RECEPTACLE (DHS COMPLIANT).
A20	METAL END PANEL SECURED TO EXISTING/MODIFIED FRAMING.
A25	REINSTALL EXISTING PLATFORM MESSAGE BOARD, SEE ELECTRICAL AND COMMS DRAWINGS.
A30	PLATFORM-MOUNTED DOUBLE SIDED BENCH TO MATCH EXISTING.
E1	EXISTING PLATFORM.
E2	EXISTING CANOPY.
E3	EXISTING CANOPY COLUMN.
E4	EXISTING STAIR.
E6	EXISTING GUARDRAIL.
E8	EXISTING DUCT BANK. SEE UTILITY DRAWINGS.
E9	EXISTING UTILITY TUNNEL. SEE UTILITY DRAWINGS.
E13	EXISTING CONCRETE CURB.
E20	EXISTING GUTTER-MOUNTED LIGHT FIXTURE.
E22	EXISTING GUARDRAIL WITH POST-MOUNTED HANDRAIL.
E25	EXISTING GUTTER-MOUNTED STATION SIGNAGE.
E26	EXISTING PASSAGEWAY TUNNEL
E29	EXISTING CANOPY-MOUNTED DIRECTIONAL SIGNAGE W/ VMS AND STROBE. SEE COMMS DRAWINGS.
S3	END-PANEL MOUNTED CIRCULAR TRACK NUMBER SIGNS (2 PER CANOPY END PANEL). SEE WAYFINDING DRAWINGS.

0 4' 8' 16'

NOT FOR CONSTRUCTION

Preliminary

THE PREPARATION OF THIS DRAWING HAS BEEN FINANCED IN PART THROUGH A GRANT FROM THE U.S. DEPARTMENT OF TRANSPORTATION, FEDERAL TRANSIT ADMINISTRATION (FTA), UNDER THE FEDERAL TRANSIT ACT OF 1964, AS AMENDED, AND IN PART BY THE TAXES OF THE CITIZENS OF LOS ANGELES COUNTY AND OF THE STATE OF CALIFORNIA.

REV	DATE	BY	APP	REG NO	EXPIRES	SEAL HOLDER	DESCRIPTION

DESIGNED BY N. GANGE
DRAWN BY R. ZHANG
CHECKED BY D. VAZQUEZ
IN CHARGE T. KIM
DATE 2/21/2025

LOS ANGELES COUNTY METROPOLITAN TRANSPORTATION AUTHORITY

HDR ENGINEERING INC.
HDR LOS ANGELES
350 S GRAND AVE, SUITE 2900
LOS ANGELES, CA 90071

LINK UNION STATION PROJECT
EARLY WORKS PACKAGE 3 - PHASE A1

ARCHITECTURE
ENLARGED SECTIONS - PLATFORM 3
SHEET 3 OF 5

CONTRACT NO PS2415-3172
DRAWING NO A1-A-362
REV 0
SCALE As indicated
SHEET NO 87

Autodesk Docs://11004870_LINK_USA/A1IS-220-CONTAINER_PHASE_A.rvt
2/19/2025 11:17:23 AM

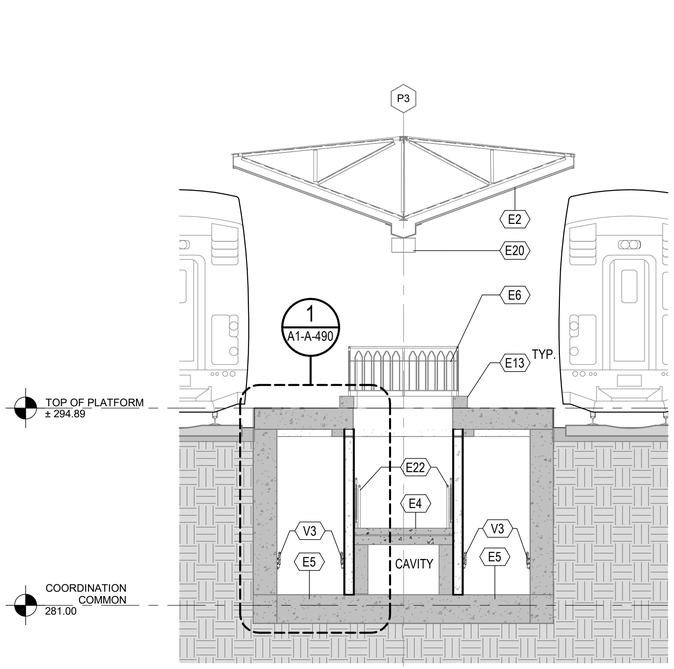

TRANSVERSE SECTION
- PLATFORM 3

1
A1-A-363

3/16" = 1'-0"

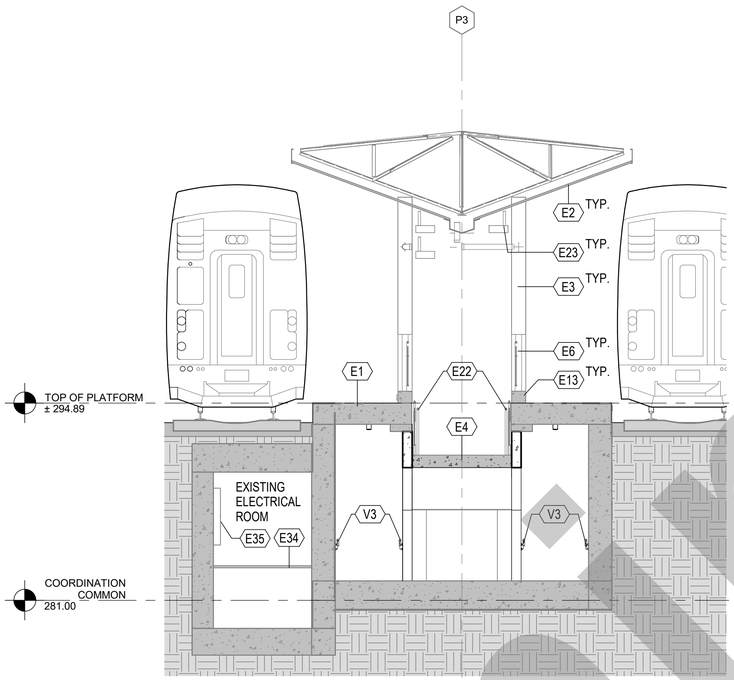

TRANSVERSE SECTION
- PLATFORM 3

2
A1-A-363

3/16" = 1'-0"

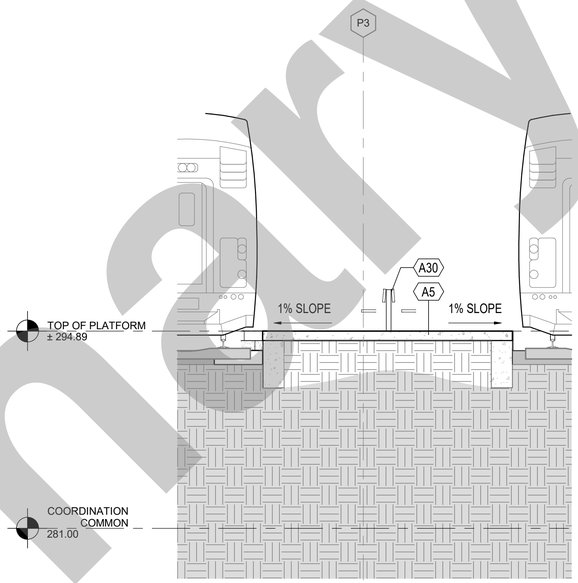

TRANSVERSE SECTION
- PLATFORM 3

3
A1-A-363

3/16" = 1'-0"

GENERAL NOTES

1. EXISTING PASSAGEWAY TUNNEL TO REMAIN IN SERVICE. CONTRACTOR TO PROVIDE PEDESTRIAN PROTECTION AGAINST ALL HAZARDS. PEDESTRIAN PROTECTION SHALL CONFORM TO ALL APPLICABLE RULES AND REGULATIONS.
2. FOR DETAILS AND DIMENSIONS, REFER TO METRO RAIL STANDARD DRAWINGS FOR NON-PLATFORM AREAS.
3. FOR LEVEL DATUMS, SEE CIVIL DRAWINGS.
4. FOR DETAILS OF THE FIRE ACCESS ROAD, SEE CIVIL DRAWINGS.
5. FOR DETAILS OF TRACK ALIGNMENT, SEE TRACK DRAWINGS.
6. FOR DRAINAGE DETAILS, SEE DRAINAGE/UTILITY DRAWINGS.
7. FOR EXISTING CONDITIONS, SEE METRO RAIL PROJECT CONTRACT A135 REFERENCE DRAWINGS.
8. SALVAGE OF CANOPY TO BE COORDINATED WITH METRO.
9. THE DIMENSION OF CENTERLINE TRACK TO EDGE OF PLATFORM IS THE CRITICAL DIMENSION. ALL EXISTING PLATFORM DIMENSIONS ARE TO BE VERIFIED BY THE CONTRACTOR IN THE FIELD.
10. PROVIDE DETECTABLE WARNING TILE ON EACH SIDE OF PLATFORM AND ON EACH EDGE CONDITION OF DESIGNATED SUBSTATION AREA.
11. REFERENCE STRUCTURAL FOR CANOPY FRAMING AND DEMO EXTENT.
12. FOR CONCRETE WORK, REFER TO THE ON-SITE STRUCTURAL SET.
13. CONTRACTOR TO VERIFY ALL MEASUREMENTS TO EXISTING INFRASTRUCTURE IN FIELD.

ELEVATION / SECTION GRAPHIC LEGEND

EXISTING TO REMAIN

EARTH

CONCRETE

SHEET KEYNOTES

⬡	SYMBOL
A5	REBUILT PORTION OF PLATFORM. SEE STRUCTURAL DRAWINGS.
A30	PLATFORM-MOUNTED DOUBLE SIDED BENCH TO MATCH EXISTING.
E1	EXISTING PLATFORM.
E2	EXISTING CANOPY.
E3	EXISTING CANOPY COLUMN.
E4	EXISTING STAIR.
E5	EXISTING RAMP.
E6	EXISTING GUARDRAIL.
E13	EXISTING CONCRETE CURB.
E20	EXISTING GUTTER-MOUNTED LIGHT FIXTURE.
E22	EXISTING GUARDRAIL WITH POST-MOUNTED HANDRAIL.
E23	EXISTING CANOPY-MOUNTED PA SPEAKER.
E34	EXISTING GRATE FLOORING.
E35	EXISTING ELECTRICAL EQUIPMENT. SEE ELECTRICAL DRAWINGS.
V3	WALL-MOUNTED HANDRAIL

Preliminary

NOT FOR CONSTRUCTION

THE PREPARATION OF THIS DRAWING HAS BEEN FINANCED IN PART THROUGH A GRANT FROM THE U.S. DEPARTMENT OF TRANSPORTATION, FEDERAL TRANSIT ADMINISTRATION (FTA), UNDER THE FEDERAL TRANSIT ACT OF 1964, AS AMENDED, AND IN PART BY THE TAXES OF THE CITIZENS OF LOS ANGELES COUNTY AND OF THE STATE OF CALIFORNIA.

REV	DATE	BY	APP	REG NO	EXPIRES	SEAL HOLDER	DESCRIPTION

DESIGNED BY: N. GANGE
DRAWN BY: R. ZHANG
CHECKED BY: D. VAZQUEZ
IN CHARGE: T. KIM
DATE: 2/21/2025

LOS ANGELES COUNTY
METROPOLITAN TRANSPORTATION AUTHORITY

HDR ENGINEERING INC.
HDR LOS ANGELES
350 S GRAND AVE, SUITE 2900
LOS ANGELES, CA 90071

LINK UNION STATION PROJECT
EARLY WORKS PACKAGE 3 - PHASE A1

ARCHITECTURE
ENLARGED SECTIONS - PLATFORM 3
SHEET 4 OF 5

CONTRACT NO: PS2415-3172
DRAWING NO: A1-A-363
REV: 0
SCALE: As indicated
SHEET NO: 88

2/19/2025 11:20:35 AM Autodesk Docs://11004870_LINK_USA-LUS-320-CONTAINER_PHASE_A.rvt

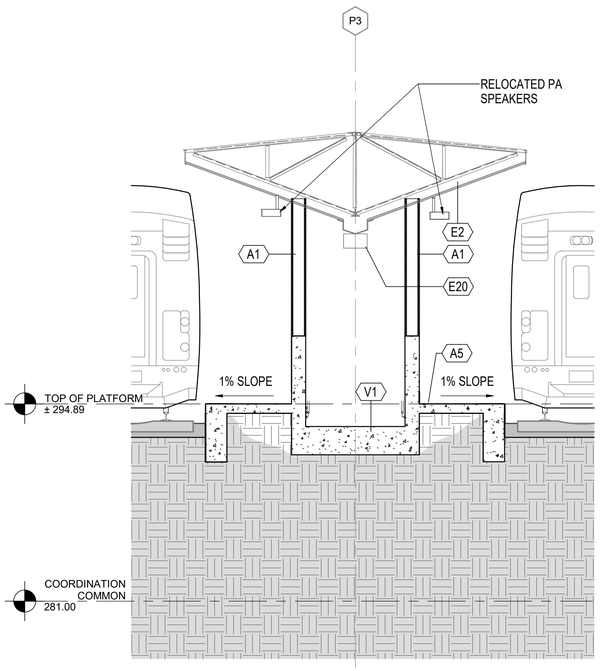

TRANSVERSE SECTION - PLATFORM 3

1 / A1-A-364

3/16" = 1'-0"

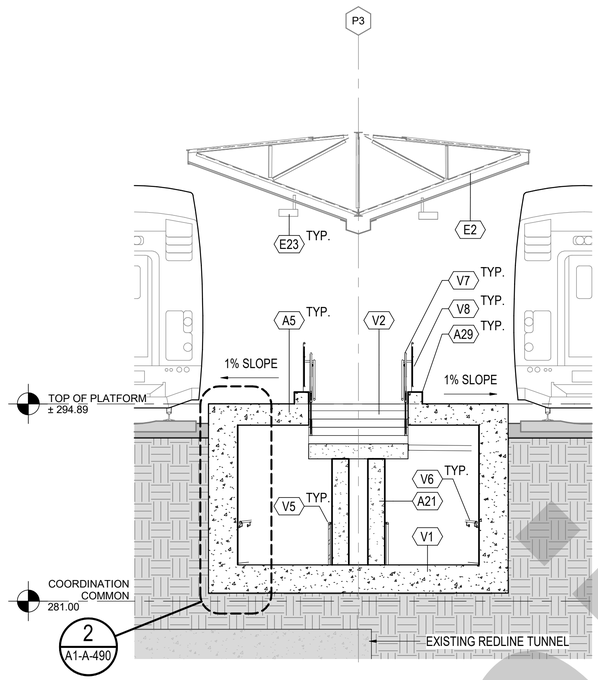

TRANSVERSE SECTION - PLATFORM 3

2 / A1-A-364

3/16" = 1'-0"

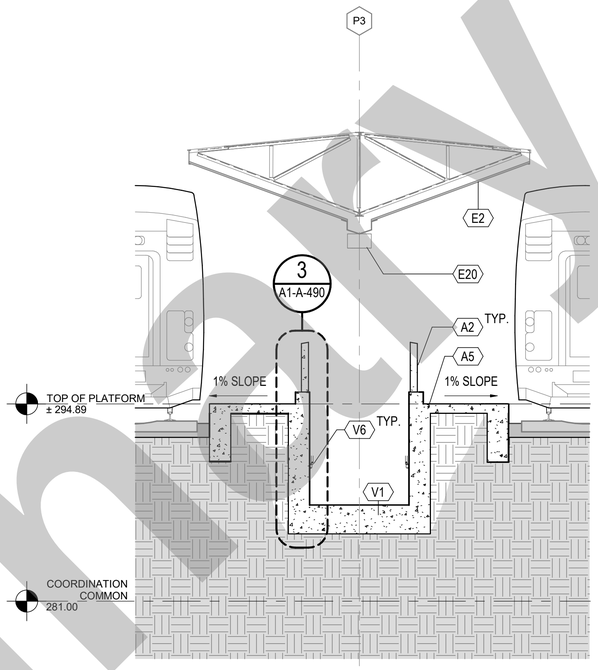

TRANSVERSE SECTION - PLATFORM 3

3 / A1-A-364

3/16" = 1'-0"

GENERAL NOTES

1. EXISTING PASSAGEWAY TUNNEL TO REMAIN IN SERVICE. CONTRACTOR TO PROVIDE PEDESTRIAN PROTECTION AGAINST ALL HAZARDS. PEDESTRIAN PROTECTION SHALL CONFORM TO ALL APPLICABLE RULES AND REGULATIONS.
2. FOR DETAILS AND DIMENSIONS, REFER TO METRO RAIL STANDARD DRAWINGS FOR NON-PLATFORM AREAS.
3. FOR LEVEL DATUMS, SEE CIVIL DRAWINGS.
4. FOR DETAILS OF THE FIRE ACCESS ROAD, SEE CIVIL DRAWINGS.
5. FOR DETAILS OF TRACK ALIGNMENT, SEE TRACK DRAWINGS.
6. FOR DRAINAGE DETAILS, SEE DRAINAGE/UTILITY DRAWINGS.
7. FOR EXISTING CONDITIONS, SEE METRO RAIL PROJECT CONTRACT A135 REFERENCE DRAWINGS.
8. SALVAGE OF CANOPY TO BE COORDINATED WITH METRO.
9. THE DIMENSION OF CENTERLINE TRACK TO EDGE OF PLATFORM IS THE CRITICAL DIMENSION. ALL EXISTING PLATFORM DIMENSIONS ARE TO BE VERIFIED BY THE CONTRACTOR IN THE FIELD.
10. PROVIDE DETECTABLE WARNING TILE ON EACH SIDE OF PLATFORM AND ON EACH EDGE CONDITION OF DESIGNATED SUBSTATION AREA.
11. REFERENCE STRUCTURAL FOR CANOPY FRAMING AND DEMO EXTENT.
12. FOR CONCRETE WORK, REFER TO THE ON-SITE STRUCTURAL SET.
13. CONTRACTOR TO VERIFY ALL MEASUREMENTS TO EXISTING INFRASTRUCTURE IN FIELD.

ELEVATION / SECTION GRAPHIC LEGEND

- EXISTING TO REMAIN
- EARTH
- CONCRETE

SHEET KEYNOTES

	SYMBOL
A1	CANOPY COLUMNS. SEE STRUCTURAL DRAWINGS
A2	PARTIAL HEIGHT CONCRETE WALL/GUARD. SEE STRUCTURAL DRAWINGS.
A5	REBUILT PORTION OF PLATFORM. SEE STRUCTURAL DRAWINGS.
A21	CAST-IN-PLACE CONCRETE WALLS BELOW STAIR. SEE STRUCTURAL DRAWINGS.
A29	CONCRETE CURB.
E2	EXISTING CANOPY.
E20	EXISTING GUTTER-MOUNTED LIGHT FIXTURE.
E23	EXISTING CANOPY-MOUNTED PA SPEAKER.
V1	CAST-IN-PLACE CONCRETE RAMP AND LANDINGS
V2	CAST-IN-PLACE CONCRETE STAIR
V5	POST-MOUNTED HANDRAIL
V6	WALL-MOUNTED ILLUMINATED HANDRAIL. SEE ELECTRICAL DRAWINGS.
V7	STAIR -MOUNTED GUARDRAIL WITH POST-MOUNTED HANDRAIL.
V8	CURB-MOUNTED GUARDRAIL.

Preliminary

NOT FOR CONSTRUCTION

THE PREPARATION OF THIS DRAWING HAS BEEN FINANCED IN PART THROUGH A GRANT FROM THE U.S. DEPARTMENT OF TRANSPORTATION, FEDERAL TRANSIT ADMINISTRATION (FTA), UNDER THE FEDERAL TRANSIT ACT OF 1964, AS AMENDED, AND IN PART BY THE TAXES OF THE CITIZENS OF LOS ANGELES COUNTY AND OF THE STATE OF CALIFORNIA.

REV	DATE	BY	APP	REG NO	EXPIRES	SEAL HOLDER	DESCRIPTION

DESIGNED BY: N. GANGE
DRAWN BY: R. ZHANG
CHECKED BY: D. VAZQUEZ
IN CHARGE: T. KIM
DATE: 2/21/2025

LOS ANGELES COUNTY
METROPOLITAN TRANSPORTATION AUTHORITY

HDR ENGINEERING INC.
HDR LOS ANGELES
350 S GRAND AVE, SUITE 2900
LOS ANGELES, CA 90071

LINK UNION STATION PROJECT
EARLY WORKS PACKAGE 3 - PHASE A1

ARCHITECTURE
ENLARGED SECTIONS - PLATFORM 3
SHEET 5 OF 5

CONTRACT NO: PS2415-3172
DRAWING NO: A1-A-364
REV: 0
SCALE: As indicated
SHEET NO: 89

2/19/2025 11:22:00 AM Autodesk Docs://I004470_LINK_USA-LUS-ZIG-CONTAINER_PHASE_A.rvt

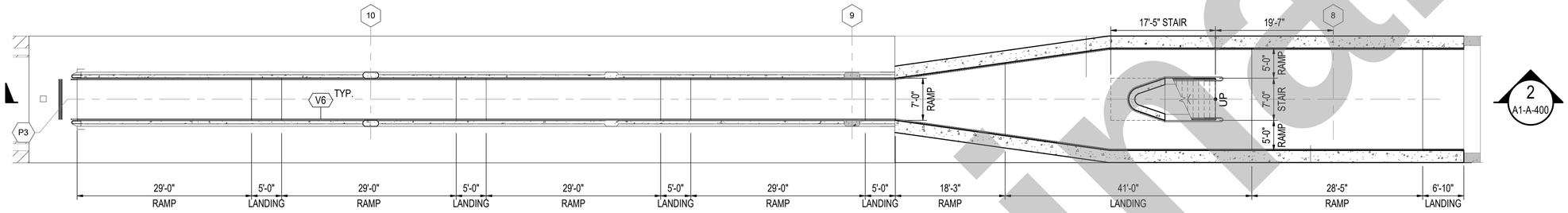

ENLARGED PLAN - RAMP

1" = 10'-0"

1
A1-A-400

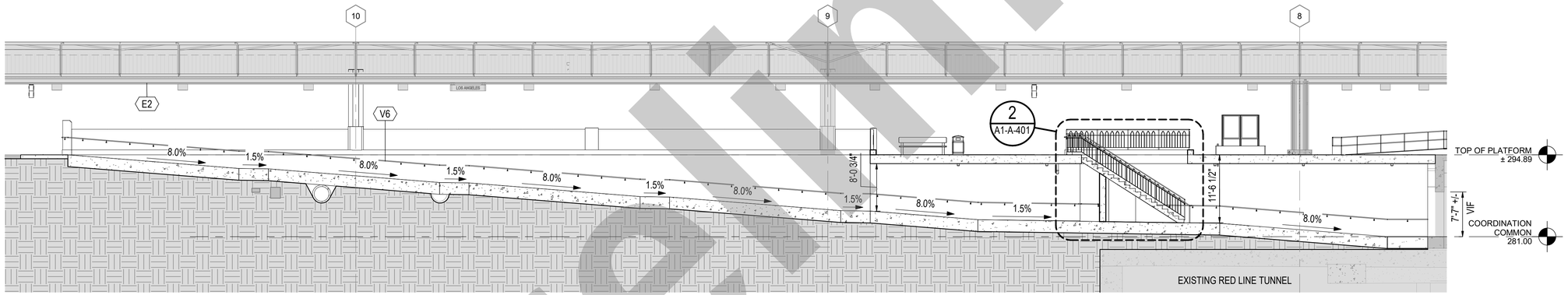

ENLARGED SECTION - RAMP

1" = 10'-0"

2
A1-A-400

GENERAL NOTES

1. EXISTING PASSAGEWAY TUNNEL TO REMAIN IN SERVICE. CONTRACTOR TO PROVIDE PEDESTRIAN PROTECTION AGAINST ALL HAZARDS. PEDESTRIAN PROTECTION SHALL CONFORM TO ALL APPLICABLE RULES AND REGULATIONS.
2. FOR DETAILS AND DIMENSIONS, REFER TO METRO RAIL STANDARD DRAWINGS FOR NON-PLATFORM AREAS.
3. FOR LEVEL DATUMS, SEE CIVIL DRAWINGS.
4. FOR DETAILS OF THE FIRE ACCESS ROAD, SEE CIVIL DRAWINGS.
5. FOR DETAILS OF TRACK ALIGNMENT, SEE TRACK DRAWINGS.
6. FOR DRAINAGE DETAILS, SEE DRAINAGE/UTILITY DRAWINGS.
7. FOR EXISTING CONDITIONS, SEE METRO RAIL PROJECT CONTRACT A135 REFERENCE DRAWINGS.
8. SALVAGE OF CANOPY TO BE COORDINATED WITH METRO.
9. THE DIMENSION OF CENTERLINE TRACK TO EDGE OF PLATFORM IS THE CRITICAL DIMENSION. ALL EXISTING PLATFORM DIMENSIONS ARE TO BE VERIFIED BY THE CONTRACTOR IN THE FIELD.
10. PROVIDE DETECTABLE WARNING TILE ON EACH SIDE OF PLATFORM AND ON EACH EDGE CONDITION OF DESIGNATED SUBSTATION AREA.
11. REFERENCE STRUCTURAL FOR CANOPY FRAMING AND DEMO EXTENT.
12. FOR CONCRETE WORK, REFER TO THE ON-SITE STRUCTURAL SET.
13. CONTRACTOR TO VERIFY ALL MEASUREMENTS TO EXISTING INFRASTRUCTURE IN FIELD.

ELEVATION / SECTION GRAPHIC LEGEND

- EXISTING TO REMAIN
- EARTH
- CONCRETE

SHEET KEYNOTES

⬡	SYMBOL
E2	EXISTING CANOPY.
V6	WALL-MOUNTED ILLUMINATED HANDRAIL. SEE ELECTRICAL DRAWINGS.

0 5' 10' 20'

NOT FOR CONSTRUCTION

Preliminary

THE PREPARATION OF THIS DRAWING HAS BEEN FINANCED IN PART THROUGH A GRANT FROM THE U.S. DEPARTMENT OF TRANSPORTATION, FEDERAL TRANSIT ADMINISTRATION (FTA), UNDER THE FEDERAL TRANSIT ACT OF 1964, AS AMENDED, AND IN PART BY THE TAXES OF THE CITIZENS OF LOS ANGELES COUNTY AND OF THE STATE OF CALIFORNIA.

REV	DATE	BY	APP	REG NO	EXPIRES	SEAL HOLDER	DESCRIPTION

DESIGNED BY N. GANGE
DRAWN BY X. YOU
CHECKED BY D. VAZQUEZ
IN CHARGE T. KIM
DATE 2/21/2025

LOS ANGELES COUNTY METROPOLITAN TRANSPORTATION AUTHORITY

HDR ENGINEERING INC.
HDR LOS ANGELES
350 S GRAND AVE, SUITE 2900
LOS ANGELES, CA 90071

LINK UNION STATION PROJECT
EARLY WORKS PACKAGE 3 - PHASE A1

ARCHITECTURE
ENLARGED PLAN & SECTION - P3 RAMP

CONTRACT NO PS2415-3172
DRAWING NO A1-A-400
REV 0
SCALE As indicated
SHEET NO 90

2/19/2025 11:25:10 AM Autodesk Docs://11004870_LINK_USA-LUS-220-CONTAINER_PHASE_A.rvt

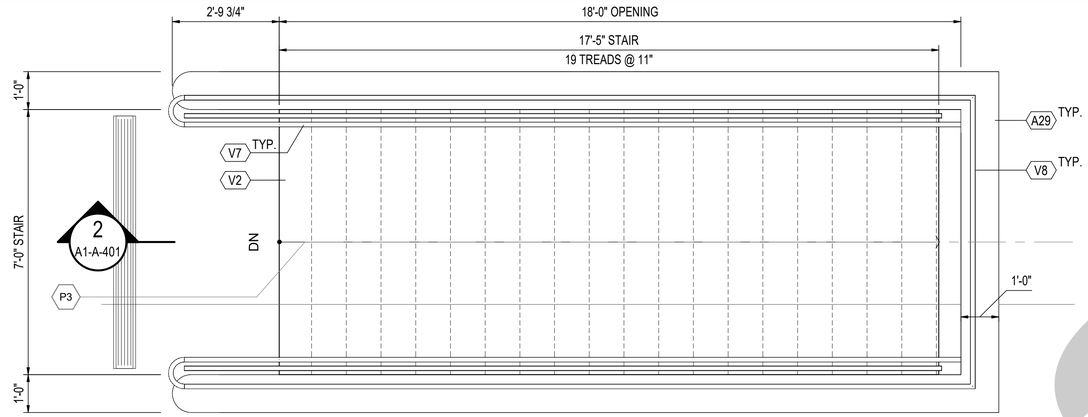

ENLARGED PLAN - STAIR

1/2" = 1'-0"

1
A1-A-401

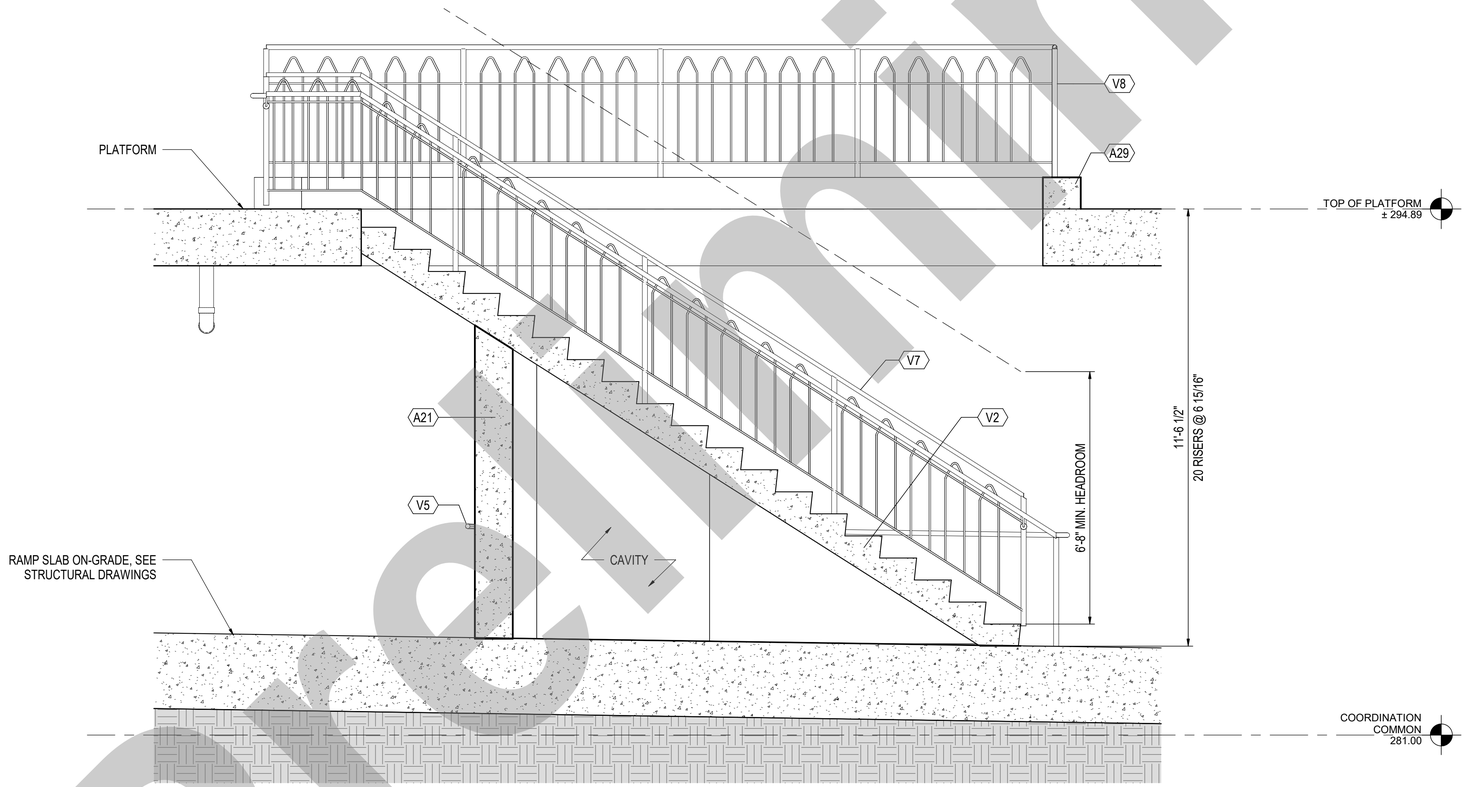

ENLARGED SECTION - STAIR

1/2" = 1'-0"

2
A1-A-401

GENERAL NOTES

1. EXISTING PASSAGEWAY TUNNEL TO REMAIN IN SERVICE. CONTRACTOR TO PROVIDE PEDESTRIAN PROTECTION AGAINST ALL HAZARDS. PEDESTRIAN PROTECTION SHALL CONFORM TO ALL APPLICABLE RULES AND REGULATIONS.
2. FOR DETAILS AND DIMENSIONS, REFER TO METRO RAIL STANDARD DRAWINGS FOR NON-PLATFORM AREAS.
3. FOR LEVEL DATUMS, SEE CIVIL DRAWINGS.
4. FOR DETAILS OF THE FIRE ACCESS ROAD, SEE CIVIL DRAWINGS.
5. FOR DETAILS OF TRACK ALIGNMENT, SEE TRACK DRAWINGS.
6. FOR DRAINAGE DETAILS, SEE DRAINAGE/UTILITY DRAWINGS.
7. FOR EXISTING CONDITIONS, SEE METRO RAIL PROJECT CONTRACT A135 REFERENCE DRAWINGS.
8. SALVAGE OF CANOPY TO BE COORDINATED WITH METRO.
9. THE DIMENSION OF CENTERLINE TRACK TO EDGE OF PLATFORM IS THE CRITICAL DIMENSION. ALL EXISTING PLATFORM DIMENSIONS ARE TO BE VERIFIED BY THE CONTRACTOR IN THE FIELD.
10. PROVIDE DETECTABLE WARNING TILE ON EACH SIDE OF PLATFORM AND ON EACH EDGE CONDITION OF DESIGNATED SUBSTATION AREA.
11. REFERENCE STRUCTURAL FOR CANOPY FRAMING AND DEMO EXTENT.
12. FOR CONCRETE WORK, REFER TO THE ON-SITE STRUCTURAL SET.
13. CONTRACTOR TO VERIFY ALL MEASUREMENTS TO EXISTING INFRASTRUCTURE IN FIELD.

SHEET KEYNOTES

⬡	SYMBOL
A21	CAST-IN-PLACE CONCRETE WALLS BELOW STAIR. SEE STRUCTURAL DRAWINGS.
A29	CONCRETE CURB.
V2	CAST-IN-PLACE CONCRETE STAIR
V5	POST-MOUNTED HANDRAIL
V7	STAIR -MOUNTED GUARDRAIL WITH POST-MOUNTED HANDRAIL.
V8	CURB-MOUNTED GUARDRAIL.

0 1' 2' 4'

NOT FOR CONSTRUCTION

Preliminary

THE PREPARATION OF THIS DRAWING HAS BEEN FINANCED IN PART THROUGH A GRANT FROM THE U.S. DEPARTMENT OF TRANSPORTATION, FEDERAL TRANSIT ADMINISTRATION (FTA), UNDER THE FEDERAL TRANSIT ACT OF 1964, AS AMENDED, AND IN PART BY THE TAXES OF THE CITIZENS OF LOS ANGELES COUNTY AND OF THE STATE OF CALIFORNIA.

REV	DATE	BY	APP	REG NO	EXPIRES	SEAL HOLDER	DESCRIPTION

DESIGNED BY N. GANGE
DRAWN BY X. YOU
CHECKED BY D. VAZQUEZ
IN CHARGE T. KIM
DATE 2/21/2025

LOS ANGELES COUNTY METROPOLITAN TRANSPORTATION AUTHORITY

HDR ENGINEERING INC.
HDR LOS ANGELES
350 S GRAND AVE, SUITE 2900
LOS ANGELES, CA 90071

LINK UNION STATION PROJECT
EARLY WORKS PACKAGE 3 - PHASE A1

ARCHITECTURE
ENLARGED PLAN & SECTION - P3 STAIR

CONTRACT NO PS2415-3172
DRAWING NO A1-A-401
REV 0
SCALE As indicated
SHEET NO 91

2/19/2025 11:27:46 AM Autodesk Docs://19044870_LINK_USA-LUS-Z50-CONTAINER_PHASE_A.rvt

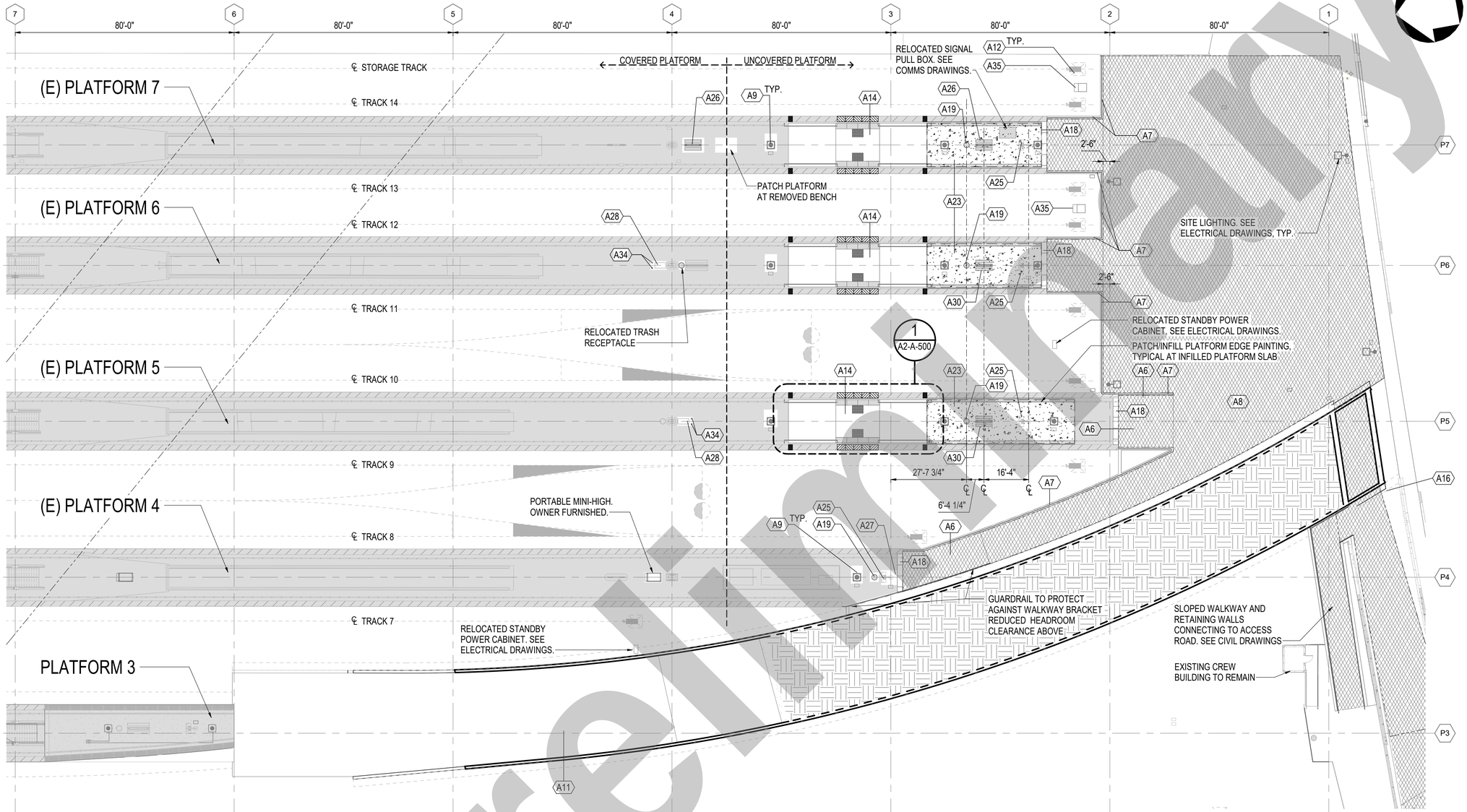

GENERAL NOTES

1. EXISTING PASSAGEWAY TUNNEL TO REMAIN IN SERVICE. CONTRACTOR TO PROVIDE PEDESTRIAN PROTECTION AGAINST ALL HAZARDS. PEDESTRIAN PROTECTION SHALL CONFORM TO ALL APPLICABLE RULES AND REGULATIONS.
2. FOR DETAILS AND DIMENSIONS, REFER TO METRO RAIL STANDARD DRAWINGS FOR NON-PLATFORM AREAS.
3. FOR LEVEL DATUMS, SEE CIVIL DRAWINGS.
4. FOR DETAILS OF THE FIRE ACCESS ROAD, SEE CIVIL DRAWINGS.
5. FOR DETAILS OF TRACK ALIGNMENT, SEE TRACK DRAWINGS.
6. FOR DRAINAGE DETAILS, SEE DRAINAGE/UTILITY DRAWINGS.
7. FOR EXISTING CONDITIONS, SEE METRO RAIL PROJECT CONTRACT A135 REFERENCE DRAWINGS.
8. SALVAGE OF CANOPY TO BE COORDINATED WITH METRO.
9. THE DIMENSION OF CENTERLINE TRACK TO EDGE OF PLATFORM IS THE CRITICAL DIMENSION. ALL EXISTING PLATFORM DIMENSIONS ARE TO BE VERIFIED BY THE CONTRACTOR IN THE FIELD.
10. PROVIDE DETECTABLE WARNING TILE ON EACH SIDE OF PLATFORM AND ON EACH EDGE CONDITION OF DESIGNATED SUBSTATION AREA.
11. REFERENCE STRUCTURAL FOR CANOPY FRAMING AND DEMO EXTENT.
12. FOR CONCRETE WORK, REFER TO THE ON-SITE STRUCTURAL SET.
13. CONTRACTOR TO VERIFY ALL MEASUREMENTS TO EXISTING INFRASTRUCTURE IN FIELD.

PLAN GRAPHIC LEGEND

- EXISTING TO REMAIN
- EARTH
- CONCRETE
- STRUCTURE BELOW
- STRUCTURE ABOVE
- ON-SITE CIVIL IMPROVEMENT
- EXISTING TACTILE WARNING SURFACE
- TACTILE WARNING SURFACE AT PLATFORM EDGE
- TRACK CENTERLINE

SHEET KEYNOTES

⬡	SYMBOL
A6	WALKWAY CONNECTING TO EXISTING PLATFORM, SEE CIVIL DWGS.
A7	GUARDRAIL MOUNTED ON CURB/RETAILING WALL SEPARATING WALKWAY FROM BALLASTED AREA. SEE CIVIL DRAWINGS.
A8	PAVEMENT, SEE CIVIL DWGS
A9	POST-MOUNTED LIGHT FIXTURE. SEE ELECTRICAL DRAWINGS.
A11	RETAINING WALL AND FILL, SEE STRUCTURAL DRAWINGS.
A12	RELOCATED BUMPER POST, SEE TRACK WORK DWGS FOR LOCATIONS.
A14	CAST-IN-PLACE CONCRETE MINI-HIGH WITH RAILINGS. SEE STRUCTURAL DRAWINGS.
A16	VEHICULAR ACCESS ROAD BELOW TRACK RAMP. SEE CIVIL DRAWINGS.
A18	END OF PLATFORM TACTILE WARNING STRIP TO RUN FULL LENGTH OF PLATFORM.
A19	FLOOR-MOUNTED TRASH RECEPTACLE (DHS COMPLIANT).
A23	INFILL SLAB-ON-GRADE PLATFORM AT REMOVED MINI-HIGH WITH CAST-IN-PLACE CONCRETE INFILL TO MATCH EXISTING PROFILE. SEE STRUCTURAL DRAWINGS.
A25	REINSTALL EXISTING PLATFORM MESSAGE BOARD, SEE ELECTRICAL AND COMMS DRAWINGS.
A26	REINSTALL EXISTING DOUBLE SIDED BENCH.
A27	INFILL PLATFORM SLAB AT REMOVED COLUMN. SEE STRUCTURAL DRAWINGS.
A28	PLATFORM MOUNTED-WATER CABINET. SEE PLUMBING DRAWINGS.
A30	PLATFORM-MOUNTED DOUBLE SIDED BENCH TO MATCH EXISTING.
A34	6" DIAM BOLLARD EXTENDING 5' ABOVE PLATFORM SURFACE. SEE STRUCTURAL DRAWINGS FOR FOUNDATION DETAILS.
A35	RELOCATED WAYSIDE POWER CABINET. SEE ELECTRICAL DRAWINGS.

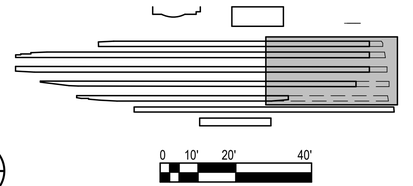

PHASE A2 PLATFORM PLANS - SOUTH PLATFORM 3-7

1" = 20'-0"

1 / A2-A-102

NOT FOR CONSTRUCTION

Preliminary

THE PREPARATION OF THIS DRAWING HAS BEEN FINANCED IN PART THROUGH A GRANT FROM THE U.S. DEPARTMENT OF TRANSPORTATION, FEDERAL TRANSIT ADMINISTRATION (FTA), UNDER THE FEDERAL TRANSIT ACT OF 1964, AS AMENDED, AND IN PART BY THE TAXES OF THE CITIZENS OF LOS ANGELES COUNTY AND OF THE STATE OF CALIFORNIA.

REV	DATE	BY	APP	REG NO	EXPIRES	SEAL HOLDER	DESCRIPTION

DESIGNED BY N. GANGE
DRAWN BY D. MURPHY
CHECKED BY D. VAZQUEZ
IN CHARGE T. KIM
DATE 2/21/2025

LOS ANGELES COUNTY METROPOLITAN TRANSPORTATION AUTHORITY

HDR ENGINEERING INC.
HDR LOS ANGELES
350 S GRAND AVE, SUITE 2900
LOS ANGELES, CA 90071

LINK UNION STATION PROJECT
EARLY WORKS PACKAGE 3 - PHASE A2

ARCHITECTURE
PLAN - SOUTH PLATFORMS 3-7

CONTRACT NO PS2415-3172
DRAWING NO A2-A-102
REV 0
SCALE As indicated
SHEET NO 92

Autodesk Docs://17004870_LINK_USA-LUS-2GD-CONTAINER_PHASE_A.rvt
2/19/2025 12:23:38 PM

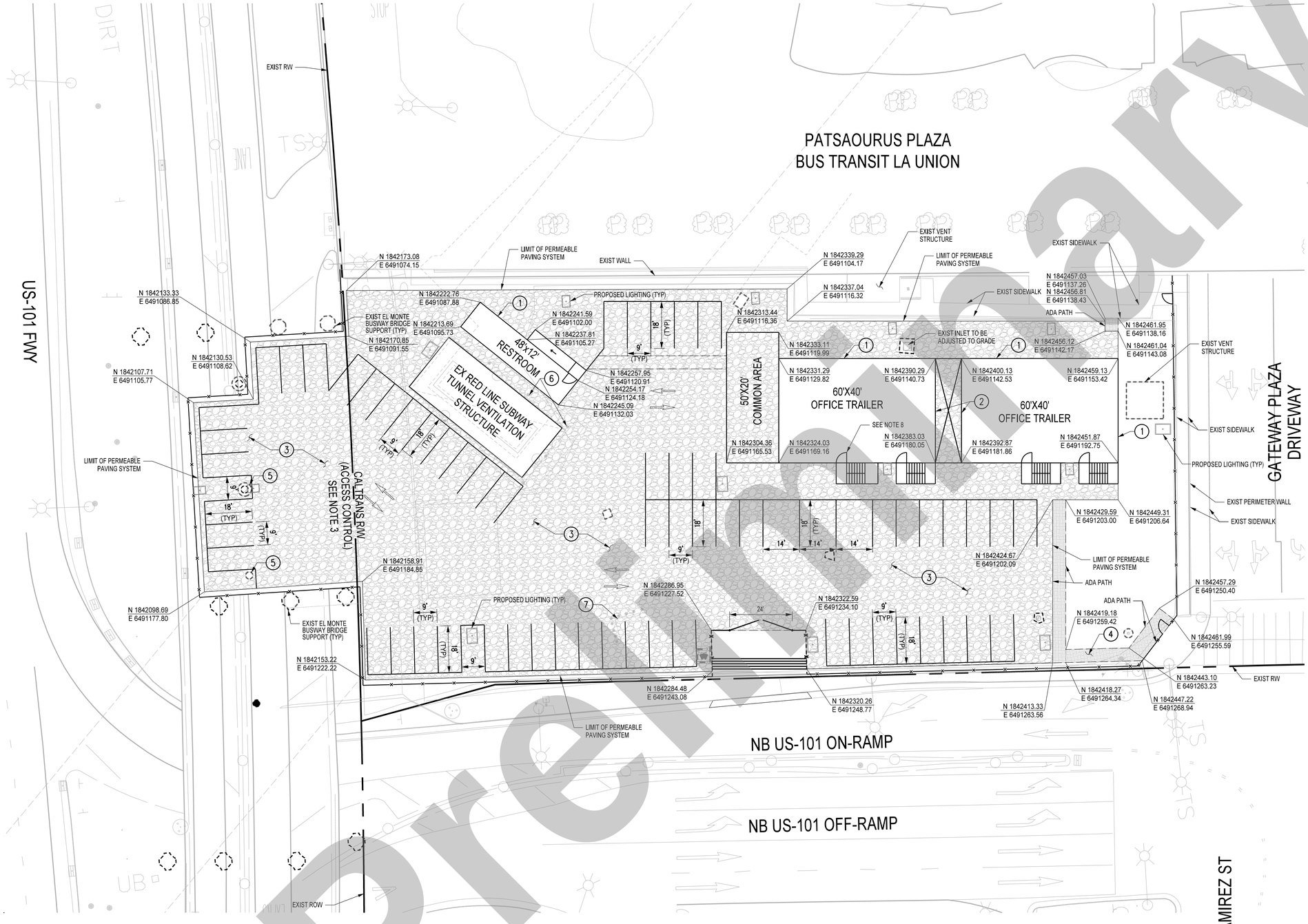

NOTES:

1. TRAILER LOCATIONS PER THE NORTHING/EASTING COORDINATES.
2. LIMIT OF PERMEABLE PAVING SYSTEM PER THE NORTHING/EASTING COORDINATES.
3. NO MATERIALS STORAGE IS PERMITTED IN CALTRANS R/W.
4. SEE ACCESS GATES & FENCING PLAN LAYOUT, SEE SHEET CR-102.
5. SEE GRADING PLAN, SEE SHEET CR-103.
6. SEE STRIPING PLAN, SEE SHEET CR-104.
7. SEE LIGHTING PLAN, SEE SHEET SL-001 AND SL-002.
8. THE CONTRACTOR SHALL FINALIZE THE ACCESS DOOR LOCATION AND STAIRCASE/RAMP CONFIGURATION. THIS WILL BE COORDINATED WITH WILLSCOT MANUFACTURER.

CONSTRUCTION NOTES:

1. INSTALL TRAILERS PER WILLSCOT MANUFACTURER TO BE PROVIDED BY CONTRACTOR.
   A. RESTROOM: 48' X 12' TOILET-TRAILER
   B. OFFICE TRAILER: 60' X 40' DOUBLE STACKED-TRAILERS
2. INSTALL 10' X 40' CANOPY BETWEEN TRAILERS TO BE PROVIDED BY CONTRACTOR.
3. CONSTRUCT PERMEABLE PAVING SYSTEM (TRUEGRID OR APPROVED EQUAL, SEE SHEET CG-002 FOR DETAILS).
4. PROPOSED ADA PATH. PLACE 3" DEPTH OF CRUSHED ROCK (TOP COURSE/COMPACTED) THAT SHALL BE 1/4" IN SIZE OVER 90% COMPACTED SUBGRADE. INSTALL WOOD HEADERS ALONG THE EDGE OF THE ADA PATH.
5. PROPOSED COLUMN PROTECTION (SEE SHEET CG-002, DETAIL D).
6. EXIST BOLLARDS TO BE PROTECTED IN PLACE.
7. EXIST DWPPS PAD WITH BOLLARDS TO BE REMOVED.

LEGEND:

- PERMEABLE PAVING SYSTEM (TRUEGRID OR APPROVED EQUAL, SEE SHEET CG-002 FOR DETAILS)
- PROPOSED CRUSHED RUCK ADA PATH. CRUSHED ROCK TO MEET MATERIAL REQUIREMENTS SET FORTH IN SSPWC SECT. 200-1.2

Preliminary

INTERIM DESIGN PLANS

THE PREPARATION OF THIS DRAWING HAS BEEN FINANCED IN PART THROUGH A GRANT FROM THE U.S. DEPARTMENT OF TRANSPORTATION, FEDERAL TRANSIT ADMINISTRATION (FTA), UNDER THE FEDERAL TRANSIT ACT OF 1964, AS AMENDED, AND IN PART BY THE TAXES OF THE CITIZENS OF LOS ANGELES COUNTY AND OF THE STATE OF CALIFORNIA.

REV	DATE	BY	APP	REG NO	EXPIRES	SEAL HOLDER	DESCRIPTION

DESIGNED BY	J. RIMORIN
DRAWN BY	R. VENEGAS
CHECKED BY	N. BUSCH
IN CHARGE	J. RIMORIN
DATE	1/27/2025

Metro
LOS ANGELES COUNTY METROPOLITAN TRANSPORTATION AUTHORITY
HDR ENGINEERING
350 S. GRAND AVENUE SUITE 2900 LOS ANGELES, CA 90071 (213) 239-5800
V&A INC.
1111 S. GRAND AVE, SUITE 103 LOS ANGELES, CA 90015 213.972.9700

LINK UNION STATION PROJECT
IPMO SITE DRAWINGS
HORIZONTAL CONTROL PLAN

CONTRACT NO	PS2415-3172
DRAWING NO	CR-101
REV	0
SCALE	1" = 20'
SHEET NO	93

Plot Driver=$PLTDRVS$ Pentable=$PENTBLS$ jrimorin 9:51:26 AM 1/28/2025 HORIZONTAL CONTROL PLAN

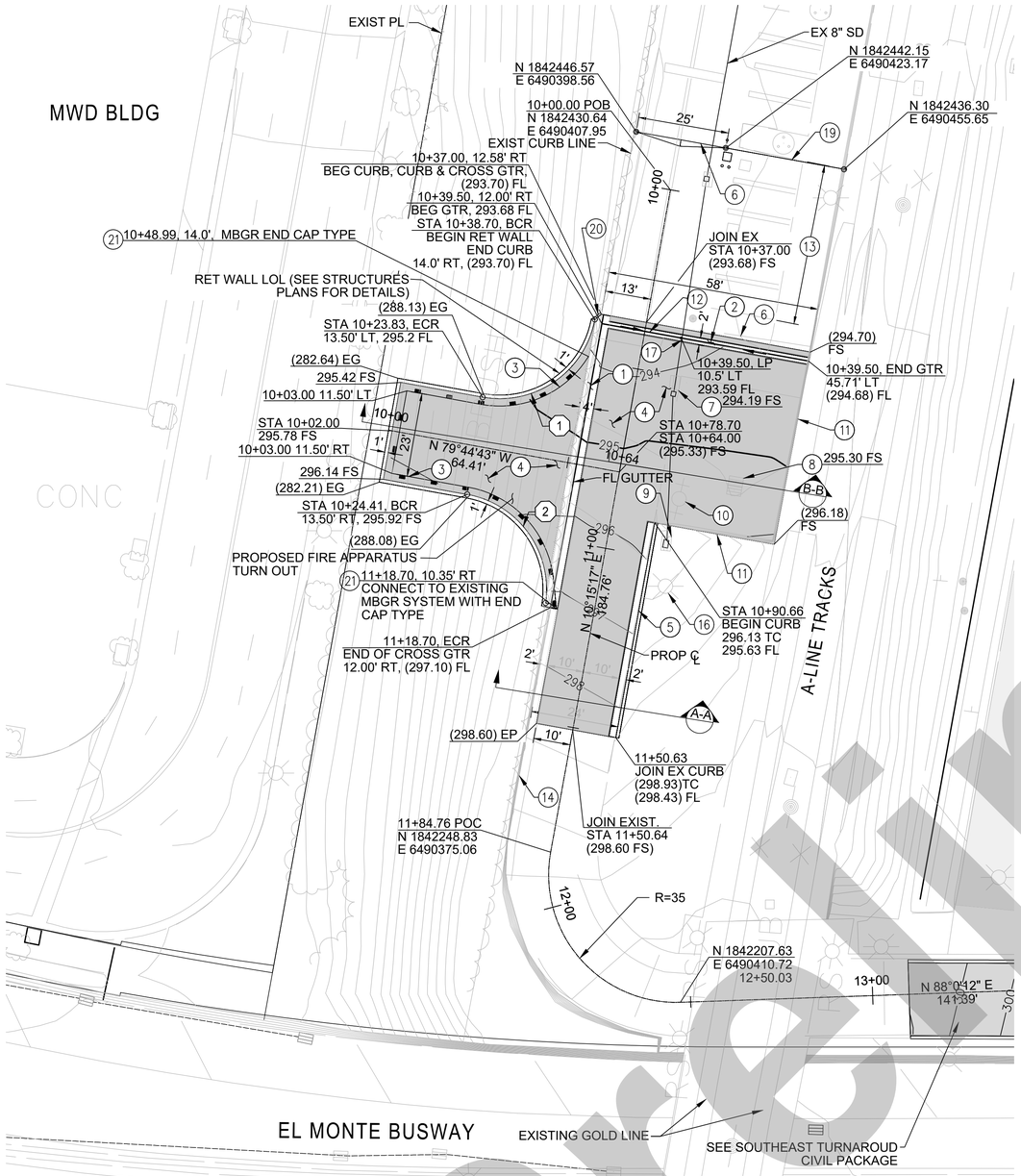

CURVE DATA TABLE				
No.	RADIUS	DELTA	LENGTH	TANGENT
1	26.50'	90°00'00"	41.63'	26.50'
2	26.50'	87°50'15"	40.62'	25.52'

GENERAL NOTES:

1. PROPOSED CONTOUR 1.0' INTERVAL.
2. CONTRACTOR TO PROVIDE LANDSCAPING IRRIGATION TO THE DISTURBED AREA WITHIN THE PROPOSED TURNAROUND.

CONSTRUCTION NOTES:

1. CONSTRUCT PC CROSS GUTTER W=4', PER DETAIL A THIS SHEET. SEE PLAN SHEET FOR LIMITS.
2. CONSTRUCT LONGITUDINAL GUTTER W=2', PER DETAIL B THIS SHEET. SEE PLAN SHEET FOR LIMITS.
3. CONSTRUCT MIDWEST GUARD RAIL SYSTEM PER CALTRANS STD A77N3. SEE MGS SECTION LAYOUT DETAIL BELOW. (TOTAL LENGTH 137.0 FT)
4. CONSTRUCT 6" PCC OVER 6" AB PAVEMENT.
5. CONSTRUCT CURB AND GUTTER PER SPPWC 120-3. MODIFY CURB DEPTH TO 8" (MATCH EXISTING CURB DEPTH) TO ACCOMMODATE SAFETY RAILING INSTALLATION, SEE CONSTRUCTION NOTE 15 FOR ADDITIONAL INFORMATION. SEE DETAIL ON THIS SHEET.
6. RELOCATE THE EXISTING 25-FT MOTORIZED SLIDING GATE LAYOUT TO THE NORTH. IF POSSIBLE, SALVAGE THE EXISTING SLIDING GATE, DOOR, FENCE ELEMENTS. UTILIZE THE EXISTING FENCE TYPE, GATE, DOOR OR EQUIVALENT. THE PROPOSED POST LOCATIONS PER THE NORTHING AND EASTING COORDINATES AS SHOWN.
7. EXISTING CATCH BASIN TO BE ADJUSTED TO GRADE.
8. EXISTING VAULT TO BE ADJUSTED TO GRADE. THE NEW VAULT COVER TO BE TRAFFIC RATED.
9. EXISTING CATCH BASIN TO BE PROTECTED IN PLACE.
10. EXISTING FIRE HYDRANT TO BE RELOCATED PER UTILITIES RELOCATION PLANS.
11. EXISTING RETAINING WALL TO BE PROTECTED IN PLACE.
12. RECONSTRUCT TRENCH DRAIN.
13. EXISTING (5) PARKING STALLS TO BE REMOVED TO ACCOMODATE FIRE APPARATUS TURNING MOVEMENT.
14. EXISTING GUARDRAIL TO BE PROTECTED IN PLACE.
15. CONSTRUCT TYPE A RAILING PER SPPWC 606-5. PROVIDE 6'-8" OPENING WITH REMOVAL CHAIN AT THE PROPOSED HYDRANT FOR HYDRANT ACCESS. SEE PROPOSED FIRE HYDRANT LOCATION PER UTILITIES RELOCATION PLANS.
16. EXISTING STREET LIGHT TO BE PROTECTED IN PLACE.
17. CONNECT TRENCH DRAIN TO EXISTING 8" STORM DRAIN PIPE.
18. 2" PCC MINOR CONCRETE (CALTRANS STD PLAN A77N5A)
19. CONSTRUCT CHAINLINK FENCE. MATCH EXISTING FENCE TYPE.
20. CONSTUCT CURB AND GUTTER PER SPPWC 120-3.
21. CONSTRUCT MIDWEST GUARD RAIL SYSTEM END CAP TO JOIN EXIST GUARDRAIL. END CAP TYPE B PER CALTRANS STD PLAN A77M1.

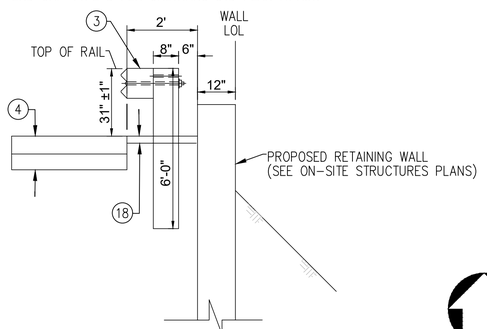

MGS SECTION LAYOUT
N.T.S.

LEGEND

PROPOSED PCC PAVEMENT. SEE CONSTRUCTION NOTE 4 FOR DETAILS.

GUARDRAIL

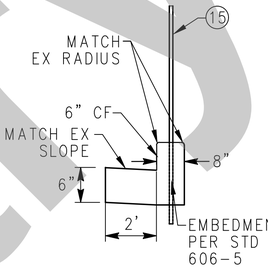

MODIFIED CURB AND GUTTER
SPPWC 120-3
NTS

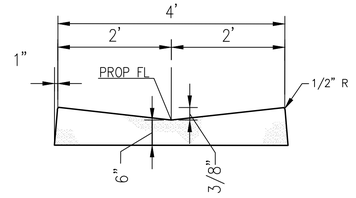

CROSS GUTTER DETAIL A
NTS

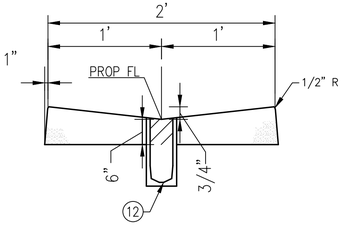

LONGITUDINAL GUTTER DETAIL B
NTS

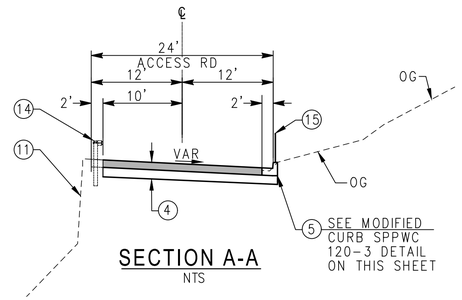

SECTION A-A
NTS

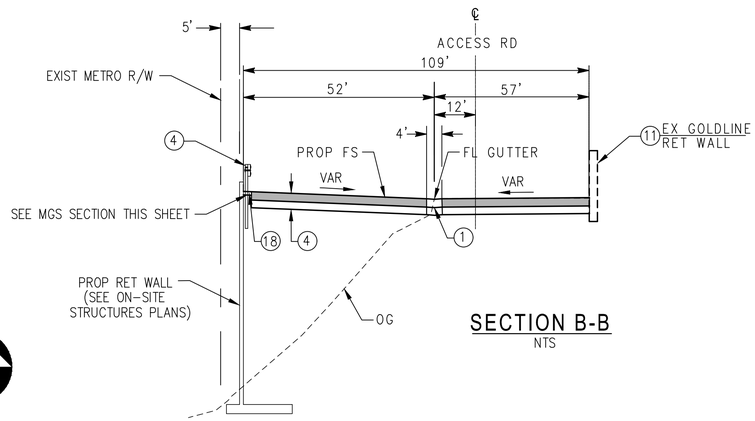

SECTION B-B
NTS

NOT FOR CONSTRUCTION

Preliminary

THE PREPARATION OF THIS DRAWING HAS BEEN FINANCED IN PART THROUGH A GRANT FROM THE U.S. DEPARTMENT OF TRANSPORTATION, FEDERAL TRANSIT ADMINISTRATION (FTA), UNDER THE FEDERAL TRANSIT ACT OF 1964, AS AMENDED, AND IN PART BY THE TAXES OF THE CITIZENS OF LOS ANGELES COUNTY AND OF THE STATE OF CALIFORNIA.

REV	DATE	BY	APP	REG NO	EXPIRES	SEAL HOLDER	DESCRIPTION

DESIGNED BY J. RIMORIN
DRAWN BY R. VENEGAS
CHECKED BY N. BUSCH
IN CHARGE T. KIM
DATE 2/21/2025

Metro
LOS ANGELES COUNTY
METROPOLITAN TRANSPORTATION AUTHORITY
V&A INC.
975 S. FAIR OAKS AVE.
PASADENA, CA 91105
213.972.9700
HDR ENGINEERING
350 S. GRAND AVENUE
SUITE 2600
LOS ANGELES, CA 90071
(213) 239-5800

LINK UNION STATION PROJECT
EARLY WORK PACKAGE 3 - PHASE A1
ON-SITE SOUTHWEST TURNAROUND SITE PLAN

CONTRACT NO PS2415-3172
DRAWING NO A1-CR-101
REV 0
SCALE 1" = 20'
SHEET NO 94

2/21/2025 1:05:33 PM USER = CRACELIS2
C:\PWWORKING\SAC\D1085449\LUS-SW-A1-CR-101.DWG

LEGEND:

PLATFORM(S)

CONSTRUCTION NOTES:

1. CONSTRUCT PCC PAVEMENT 6" PCC/6" AB WITHIN SHADED AREA SHOWN.
2. PROTECT IN PLACE EXISTING CONCRETE BARRIER
   NORTH SIDE STA 13+10 TO STA 14+47
   SOUTH SIDE STA 13+11 TO STA 14+62
3. PROPOSED WALKWAY FROM PLATFORM TO TUNNEL.
4. PROPOSED CONCRETE CURB SLOUGH WALL, SEE DETAIL THIS SHEET.
5. EXISTING WALKWAY TO BE PROTECTED ON PLACE.
6. 4" PCC/4" AB PAVED SLOPE.
7. GRATING INLET PER SPPWC 304-3, ONE GRATE.
8. CONSTRUCT 18" RCP.
9. CONSTRUCT CONCRETE BARRIER TYPE 60D PER CALTRANS STD DWG A76A.

GENERAL NOTES:

1. PROPOSED CONTOUR INTERVAL 1.0'.
2. SEE ARCHITECTURAL DRAWINGS FOR RAILING DETAILS.

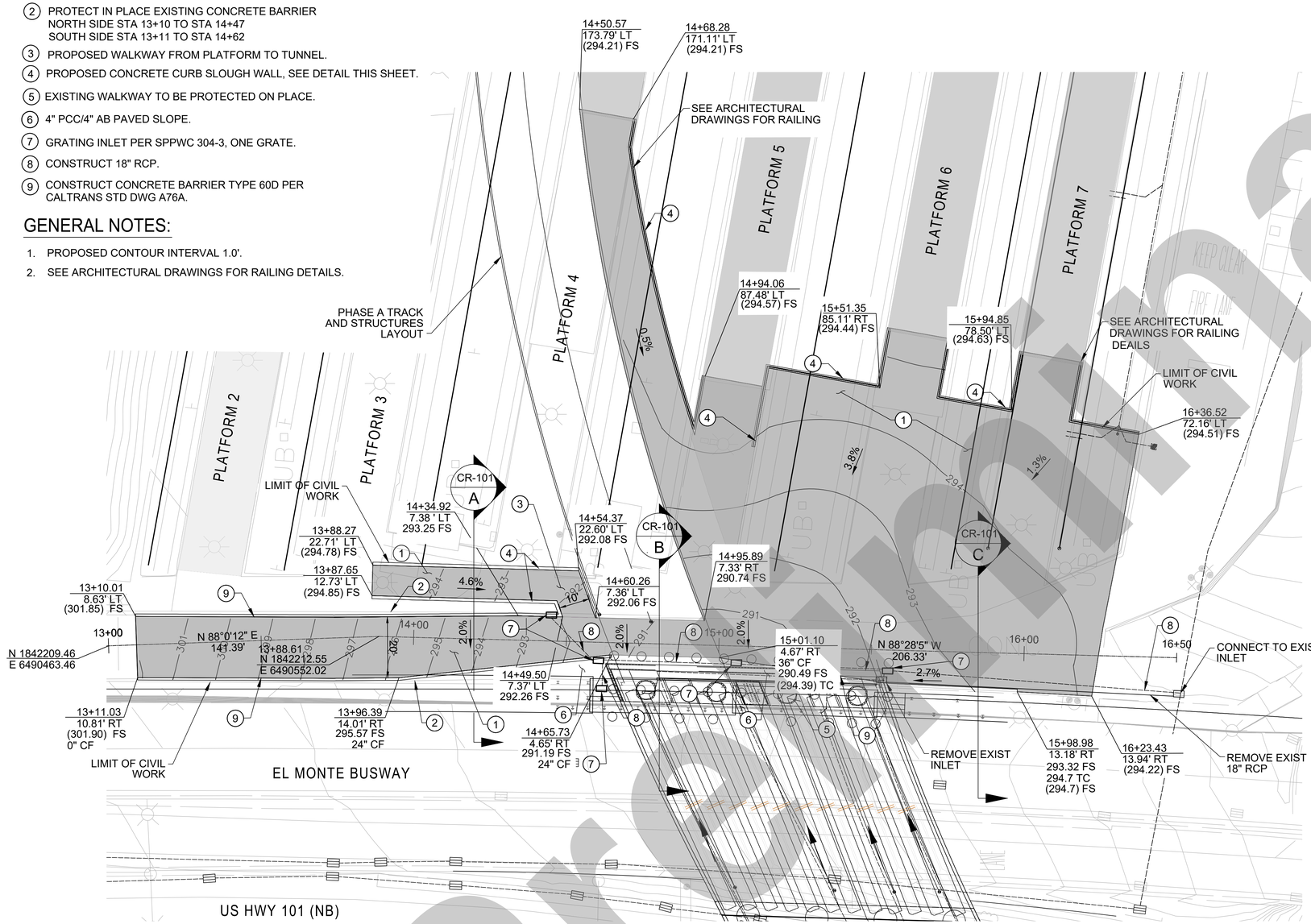

20 0 20 40
1"=20'

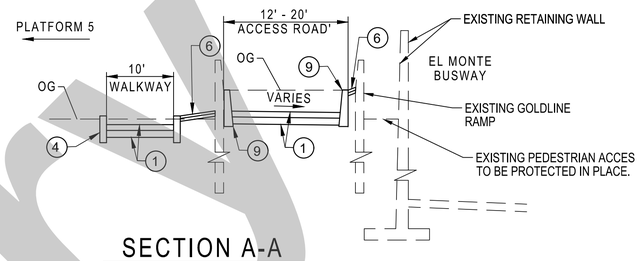

SECTION A-A
N.T.S.

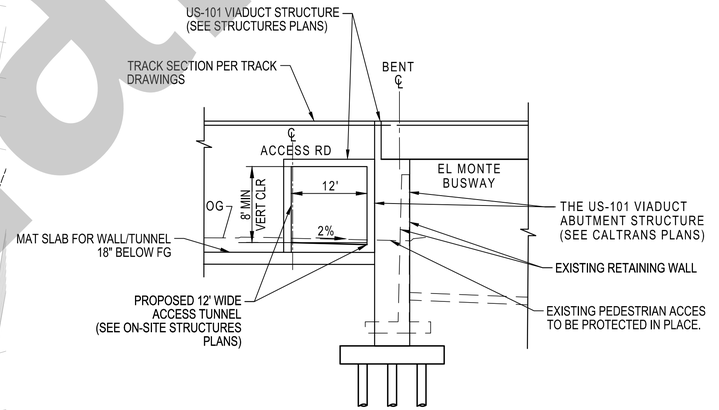

SECTION B-B
N.T.S.

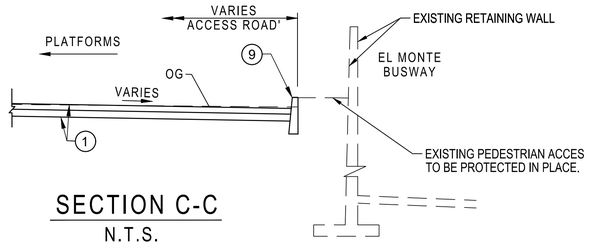

SECTION C-C
N.T.S.

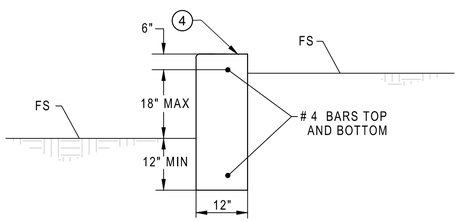

CONCRETE CURB SLOUGH WALL DETAIL
N.T.S.

NOT FOR CONSTRUCTION

Preliminary

THE PREPARATION OF THIS DRAWING HAS BEEN FINANCED IN PART THROUGH A GRANT FROM THE U.S. DEPARTMENT OF TRANSPORTATION, FEDERAL TRANSIT ADMINISTRATION (FTA), UNDER THE FEDERAL TRANSIT ACT OF 1964, AS AMENDED, AND IN PART BY THE TAXES OF THE CITIZENS OF LOS ANGELES COUNTY AND OF THE STATE OF CALIFORNIA.

REV	DATE	BY	APP	REG NO	EXPIRES	SEAL HOLDER	DESCRIPTION

DESIGNED BY J. RIMORIN
DRAWN BY R. VENEGAS
CHECKED BY N. BUSCH
IN CHARGE T. KIM
DATE 2/21/2025

Metro
LOS ANGELES COUNTY
METROPOLITAN TRANSPORTATION AUTHORITY
V&A INC. 975 S. FAIR OAKS AVE PASADENA, CA 91105 213.972.9700
HDR ENGINEERING 350 S. GRAND AVENUE SUITE 2900 LOS ANGELES, CA 90071 (213) 239-0800

LINK UNION STATION PROJECT
EARLY WORK PACKAGE 3 - PHASE A2
CIVIL
ON-SITE SOUTHEAST TURNAROUND
CIVIL PLAN

CONTRACT NO PS2415-3172
DRAWING NO A2-CR-101
REV 0
SCALE 1" = 20'
SHEET NO 95

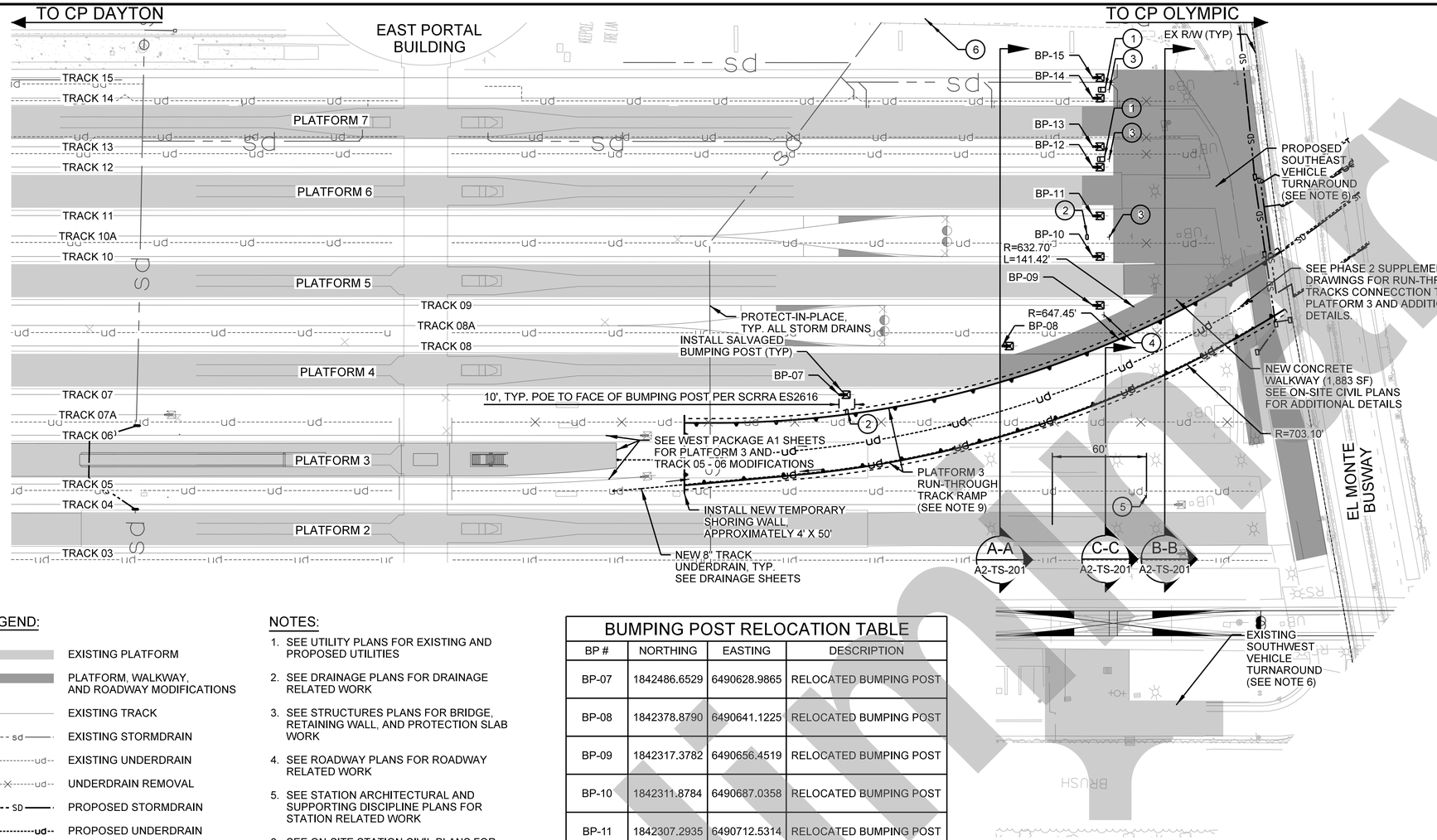



"NO TRESPASSING" SIGN
RELOCATE





"SPOT CAB" SIGN
RELOCATE



LEGEND:

- EXISTING PLATFORM
- PLATFORM, WALKWAY, AND ROADWAY MODIFICATIONS
- EXISTING TRACK
- EXISTING STORMDRAIN
- EXISTING UNDERDRAIN
- UNDERDRAIN REMOVAL
- PROPOSED STORMDRAIN
- PROPOSED UNDERDRAIN
- TRACK MODIFICATIONS
- PORPOSED WALKWAY
- PROPOSED RETAINING WALL

NOTES:

1. SEE UTILITY PLANS FOR EXISTING AND PROPOSED UTILITIES
2. SEE DRAINAGE PLANS FOR DRAINAGE RELATED WORK
3. SEE STRUCTURES PLANS FOR BRIDGE, RETAINING WALL, AND PROTECTION SLAB WORK
4. SEE ROADWAY PLANS FOR ROADWAY RELATED WORK
5. SEE STATION ARCHITECTURAL AND SUPPORTING DISCIPLINE PLANS FOR STATION RELATED WORK
6. SEE ON-SITE STATION CIVIL PLANS FOR ON-SITE CIVIL RELATED WORK
7. SEE CALTRANS PLANS FOR US-101 HIGHWAY RELATED WORK
8. SEE ON-SITE STRUCTURAL PLANS FOR ON-SITE STRUCTURAL RELATED WORK

BUMPING POST RELOCATION TABLE

BP #	NORTHING	EASTING	DESCRIPTION
BP-07	1842486.6529	6490628.9865	RELOCATED BUMPING POST
BP-08	1842378.8790	6490641.1225	RELOCATED BUMPING POST
BP-09	1842317.3782	6490656.4519	RELOCATED BUMPING POST
BP-10	1842311.8784	6490687.0358	RELOCATED BUMPING POST
BP-11	1842307.2935	6490712.5314	RELOCATED BUMPING POST
BP-12	1842301.7909	6490743.1306	RELOCATED BUMPING POST
BP-13	1842299.4791	6490755.9865	RELOCATED BUMPING POST
BP-14	1842294.0093	6490786.4028	RELOCATED BUMPING POST
BP-15	1842291.7092	6490799.1934	RELOCATED BUMPING POST

CONSTRUCTION SYMBOLS:

1. RELOCATED WAYSIDE POWER CABINETS (SEE EWP3 ELECTRICAL PLANS FOR MORE DETAILS)
2. RELOCATED STANDBY POWER PEDESTAL (SEE EWP3 ELECTRICAL PLANS FOR MORE DETAILS)
3. RELOCATED "NO TRESPASSING" TRACK SIGN. MATCH EXISTING OFFSET TO RAILING (SEE EWP3 WAYFINDING PLANS FOR ADDITIONAL SIGNAGE DETAILS)
4. FABRICATE AND INSTALL NEW "SPOT CAB" SIGN TO MATCH EXISTING (SEE EWP3 WAYFINDING PLANS FOR ADDITIONAL SIGNAGE DETAILS)
5. RELOCATED "SPOT CAB" SIGN. LOCATE 60' FROM CENTER OF EXISTING MINI-HIGH (SEE EWP3 WAYFINDING PLANS FOR ADDITIONAL SIGNAGE DETAILS)
6. RECONSTRUCTED GLASS HOUSE (SEE EWP3 GLASSHOUSE PLAN FOR NEW LOCATION AND ADDITIONAL DETAILS)

N

40 0 40 80

1"=40'

NOT FOR CONSTRUCTION

Preliminary

THE PREPARATION OF THIS DRAWING HAS BEEN FINANCED IN PART THROUGH A GRANT FROM THE U.S. DEPARTMENT OF TRANSPORTATION, FEDERAL TRANSIT ADMINISTRATION (FTA), UNDER THE FEDERAL TRANSIT ACT OF 1964, AS AMENDED, AND IN PART BY THE TAXES OF THE CITIZENS OF LOS ANGELES COUNTY AND OF THE STATE OF CALIFORNIA.

REV	DATE	BY	APP	REG NO	EXPIRES	SEAL HOLDER	DESCRIPTION

DESIGNED BY Z. MACDONELL
DRAWN BY M. ORTIZ
CHECKED BY A. MULL
IN CHARGE A. MULL
DATE 02/21/2025

Metro
LOS ANGELES COUNTY
METROPOLITAN TRANSPORTATION AUTHORITY
HDR ENGINEERING
350 S. GRAND AVENUE
SUITE 2900
LOS ANGELES, CA 90071
(213) 239-5800

LINK UNION STATION PROJECT
WEST PACKAGE 2 - PHASE A2
TRACK DRAWINGS
PLATFORM 4-7 PROPOSED MODIFICATION PLAN (SHEET 1 OF 1)

CONTRACT NO PS2415-3172
DRAWING NO A2-TP-101
REV 0
SCALE AS NOTED
SHEET NO 96

Plot Driver=$PLTDRVS$ Pentable=$PENTBLS$ OMAPI-PWICS03$ 6:02:49 PM 2/21/2025 $FILE$

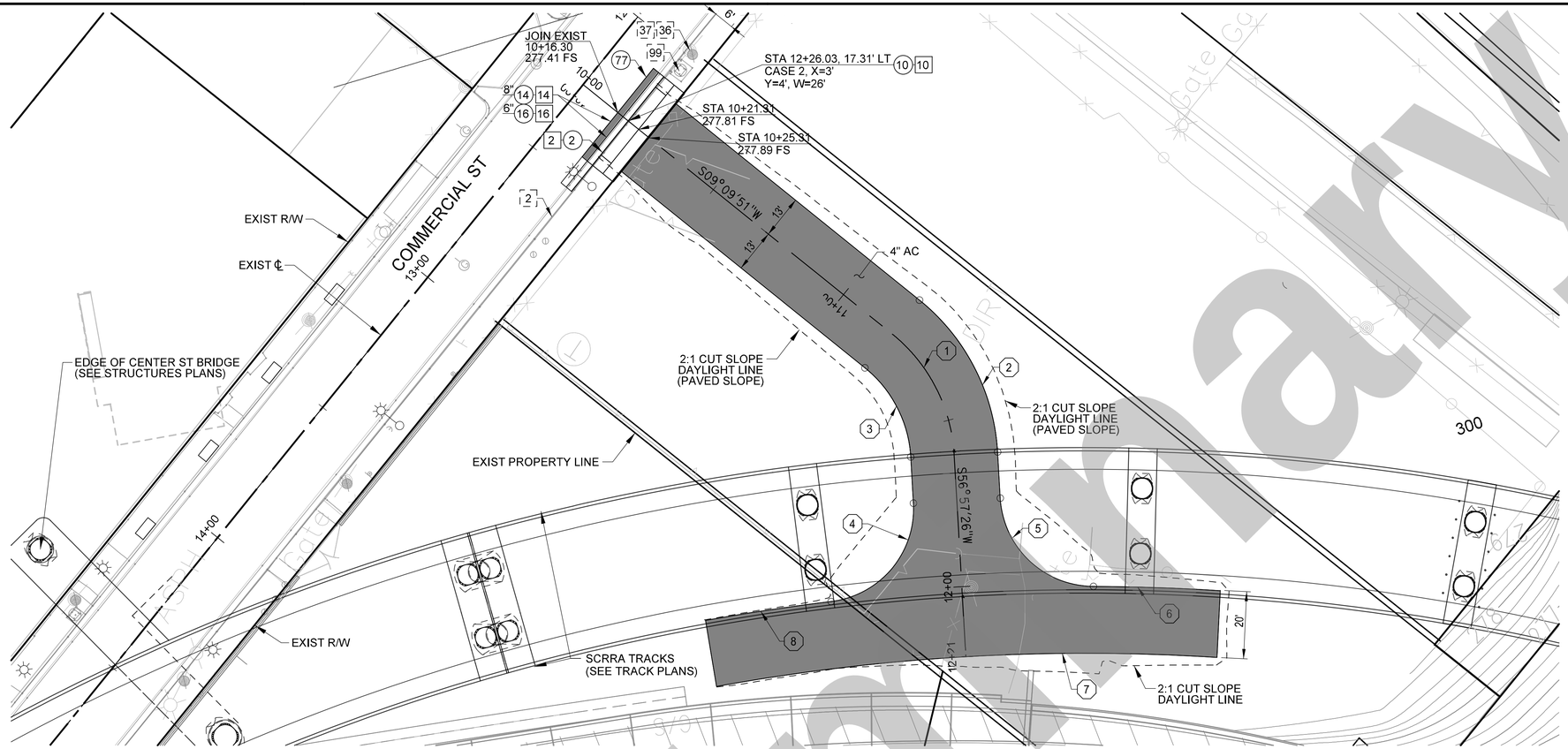

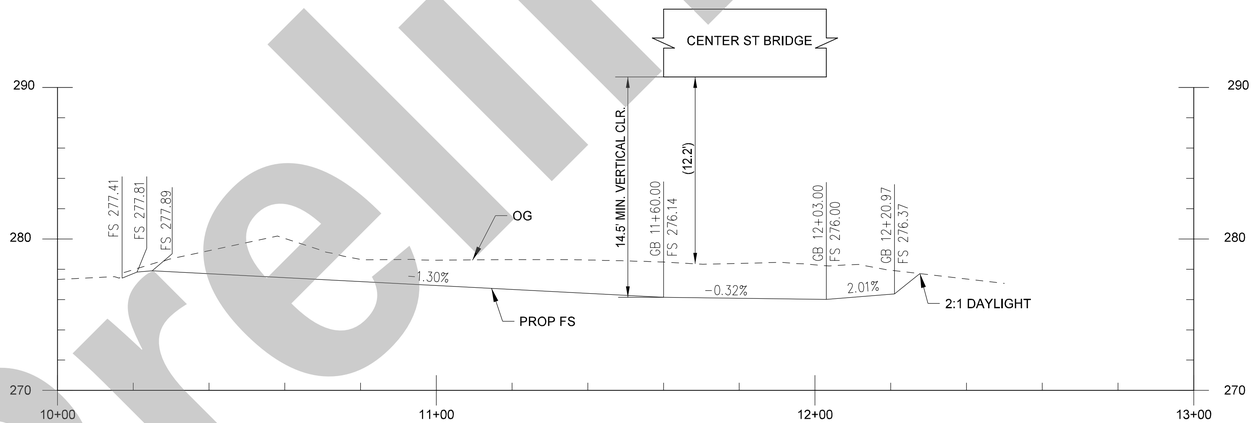

CONSTRUCTION SYMBOLS

- CONSTRUCT
- EXISTING
- REMOVE
- REMODEL EXISTING
- REMOVE & CONSTRUCT
- WORK BY OTHERS

CONSTRUCTION NOTES:

2 - TYPE C INTERGRAL CURB & GUTTER
10 - CONCRETE DRIVEWAY
14 - ASPHALT CONCRETE PAVEMENT
16 - CRUSHED MISCELLANEOUS BASE
36 - UTILITY POLE
37 - POLE ANCHOR
77 - SAWCUT LINE & JOIN
99 - SIDE OPENING CATCH BASIN

CURVE DATA TABLE

No.	RADIUS	DELTA	LENGTH	TANGENT
1	50.00'	47°47'35"	41.71'	22.15'
2	63.00'	47°47'35"	52.55'	27.91'
3	37.00'	47°47'35"	30.86'	16.39'
4	28.00'	86°28'24"	42.26'	26.33'
5	28.00'	86°28'24"	42.26'	26.33'
6	638.50'	3°24'12"	37.93'	18.97'
7	618.50'	13°55'06"	150.25'	75.50'
8	638.50'	3°24'12"	37.93'	18.97'

LEGEND:

NEW PAVEMENT AREA (PAVEMENT TYPE & SECTION TBD UNLESS OTHERWISE NOTED)

20' 10' 0' 20' 40'
GRAPHIC SCALE
SCALE: 1"=20'

VIERTEL SITE/DIVISION 20 PWT TURNAROUND

NOT FOR CONSTRUCTION

Preliminary

THE PREPARATION OF THIS DRAWING HAS BEEN FINANCED IN PART THROUGH A GRANT FROM THE U.S. DEPARTMENT OF TRANSPORTATION, FEDERAL TRANSIT ADMINISTRATION (FTA), UNDER THE FEDERAL TRANSIT ACT OF 1964, AS AMENDED, AND IN PART BY THE TAXES OF THE CITIZENS OF LOS ANGELES COUNTY AND OF THE STATE OF CALIFORNIA.

REV	DATE	BY	APP	REG NO	EXPIRES	SEAL HOLDER	DESCRIPTION

DESIGNED BY: JOSEPHUS RIMORIN
DRAWN BY: RUBEN VENEGAS
CHECKED BY: NOAH BUSCH
IN CHARGE: T. KIM
DATE: 02/21/2025

Metro
LOS ANGELES COUNTY
METROPOLITAN TRANSPORTATION AUTHORITY
V&A INC.
111 SOUTH GRAND AVE, SUITE 103
LOS ANGELES, CA 90015
213.972.9700
HDR ENGINEERING
350 S. GRAND AVENUE
SUITE 2500
LOS ANGELES, CA 90071
(213) 239-5800

LINK UNION STATION PROJECT
ROADWAY IMPROVEMENTS
VIERTEL SITE/DIVISION 20 PWT TURNAROUND

CONTRACT NO: PS2415-3172
DRAWING NO: CR-001
REV: 0
SCALE: H: 1"=20' V: 1"= 5'
SHEET NO: 97

Plot Driver=$PLTDRVS$ Pentable=PlotStamp.tbl USER = jrimorin 3:16:04 PM 2/21/2025 $FILE$

LIFE STORAGE BUILDING
(TO BE DEMOLISHED)

CENTER ST
OLD CENTER ST
12
12+00
16+00
15+00
COMMERCIAL ST
PI 15+72.44
N9°03'24.83"E
552.75
N9°23'04.90"W
173.78
EXIST RW
ALK CULVERT
CENTER ST
13+00
13+42
(276.35) FS
276.06 FL
JOIN EX
(276.29) FS
JOIN EX
(276.29) FL
(276.35) FS
LIMIT OF REGRADING
JOIN EX
277.55 TC, 0" CF
(277.55) FS
EXIST EQUIPMENT PAD
FACE OF
RET WALL
276.14 FS
276.12 FS
GUTTER FL
PROP
RIBBON
GUTTER
(276.25) FS
JOIN EX
(277.85) FS
JOIN EX
(278.00) FS
EXIST RETAINING/PERIMETER WALL
PROP
OUTRIGGER
COLUMN
WALL DEMO BEGIN
275.34 FS
277.50 TC, 8" CF
276.83 FS
(277.50) FS
6.0%
275.80 FL
275.86 FS
277.77 TC, 8" CF
277.10 FS
(277.77) FS
JOIN EX
(275.30) TC
(274.85) FL
275.34 FS
278.00 TC, 8" CF
277.33 FS
(278.00) FS
3/4" CF
274.80 FL
275.19 FL
278.88 TC, 16" CF
276.67 FS
(278.00) FS
STA 13+20.27, 17.50' LT
CASE 2, X=4'
Y'=4, W=20'
274.66 FL
3/4" LIP
275.25 FS
275.20 FS
275.14 FL
MATCH EXIST PAVEMENT
3" AC/6.5" AB
275.20 FS
PROP BOLLARD (TYP)
275.06 FS
275.00 FL
275.06 FS
JOIN EX
278.06 TC, 0" CF
(278.06) FS
3/4" CF
274.52 FL
275.02 FS
(276.21) FS
JOIN EX
(274.94) TC
(274.48) FL
274.94 FL
(276.00) FL
274.87 FS (MODIFY PROPOSE INLET)
(275.87) TOP OF GRATE
272.5 HGL, 272.29 IE
WALL DEMO END
275.00 FS
LIMIT OF REGRADING
(275.88) FS
MODIFY EX
DRAINAGE
STRUCTURE
FACE OF
RET WALL
(276.42) FS
JOIN EX
(277.28) FS
EXIST RETAINING/PERIMETER WALL
PROTECT IN PLACE PARKING
LOT LIGHTING
EXIST RW
(275.67) FS
(276.07) FS
ASPH

EXISTING DIVISION 20 PWT
PORTAL

EXISTING VIERTEL SITE
PARKING LOT

10 5' 0 10' 20'
HORIZONTAL GRAPHIC SCALE

NOT FOR CONSTRUCTION

Preliminary

THE PREPARATION OF THIS DRAWING HAS BEEN FINANCED IN PART THROUGH A GRANT FROM THE U.S. DEPARTMENT OF TRANSPORTATION, FEDERAL TRANSIT ADMINISTRATION (FTA), UNDER THE FEDERAL TRANSIT ACT OF 1964, AS AMENDED, AND IN PART BY THE TAXES OF THE CITIZENS OF LOS ANGELES COUNTY AND OF THE STATE OF CALIFORNIA.

REV	DATE	BY	APP	REG NO	EXPIRES	SEAL HOLDER	DESCRIPTION

DESIGNED BY	J. RIMORIN
DRAWN BY	R. VENEGAS
CHECKED BY	N. BUSCH
IN CHARGE	T. KIM
DATE	02/21/2025

Metro
LOS ANGELES COUNTY
METROPOLITAN TRANSPORTATION AUTHORITY

HDR ENGINEERING
350 S. GRAND AVENUE
SUITE 2900
LOS ANGELES, CA 90071
(213) 239-5800

LINK UNION STATION PROJECT
LINK US PROJECT
VIERTEL DRIVEWAY
OON-SITE GRADING

CONTRACT NO	PS2415-3172
DRAWING NO	CR-002
REV	0
SCALE	1"=10'
SHEET NO	98

Plot Driver=$PLTDRVS$ Pentable=$PENTBLS$ jrimorin 3:29:22 PM 2/21/2025 LUS-CR-101.dgn

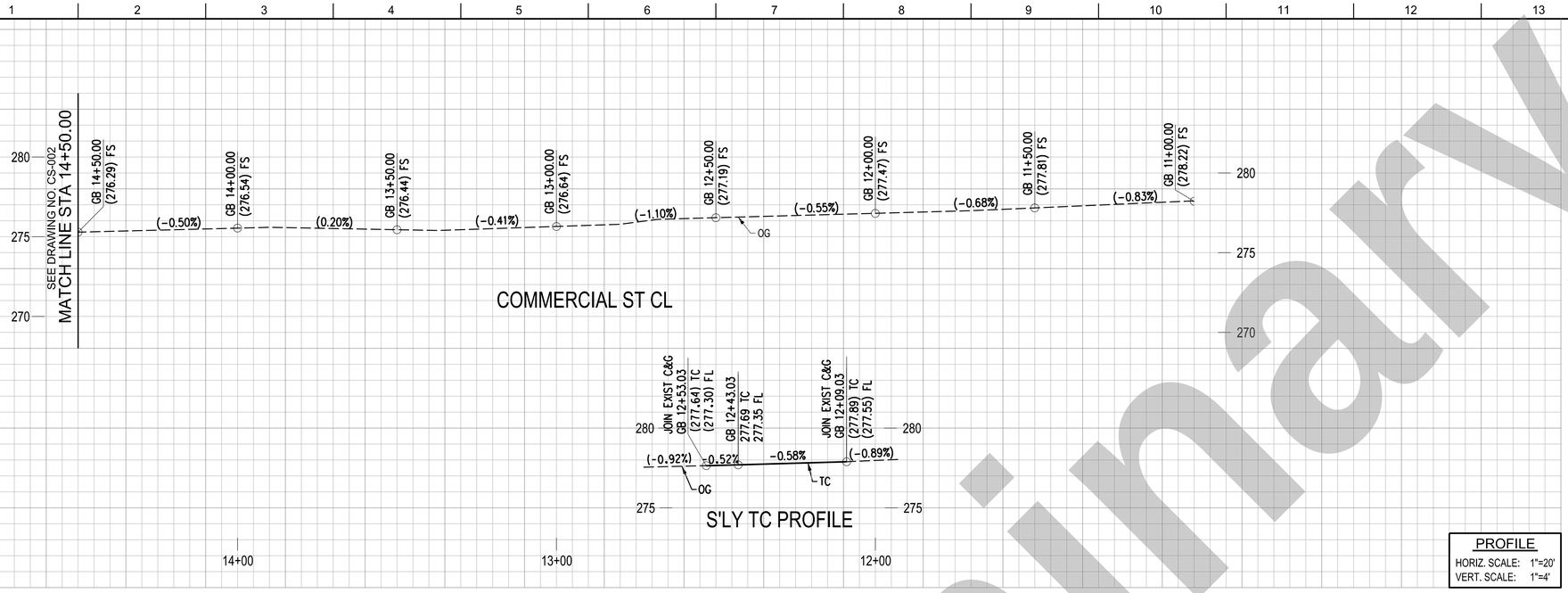

CONSTRUCTION SYMBOLS

- CONSTRUCT
- EXISTING
- REMOVE
- REMODEL EXISTING
- REMOVE & CONSTRUCT
- WORK BY OTHERS

CONSTRUCTION NOTES:

2 - TYPE C INTERGRAL CURB & GUTTER
4 - CONCRETE GUTTER
10 - CONCRETE DRIVEWAY
12 - CONCRETE WALK
14 - ASPHALT CONCRETE PAVEMENT
16 - CRUSHED MISCELLANEOUS BASE
23 - GRADE ONLY
26 - TREE WELL
36 - UTILITY POLE
37 - POLE ANCHOR
41 - FIRE HYDRANT
57 - STREET LIGHTING POLE
61 - CONCRETE BOLLARD
64 - RETAINING WALL
66 - CONCRETE MASONRY BLOCK WALL
68 - CHAIN LINK GATE
77 - SAWCUT LINE & JOIN
99 - SIDE OPENING CATCH BASIN
157 - WATER VAULT

PROFILE
HORIZ. SCALE: 1"=20'
VERT. SCALE: 1"=4'

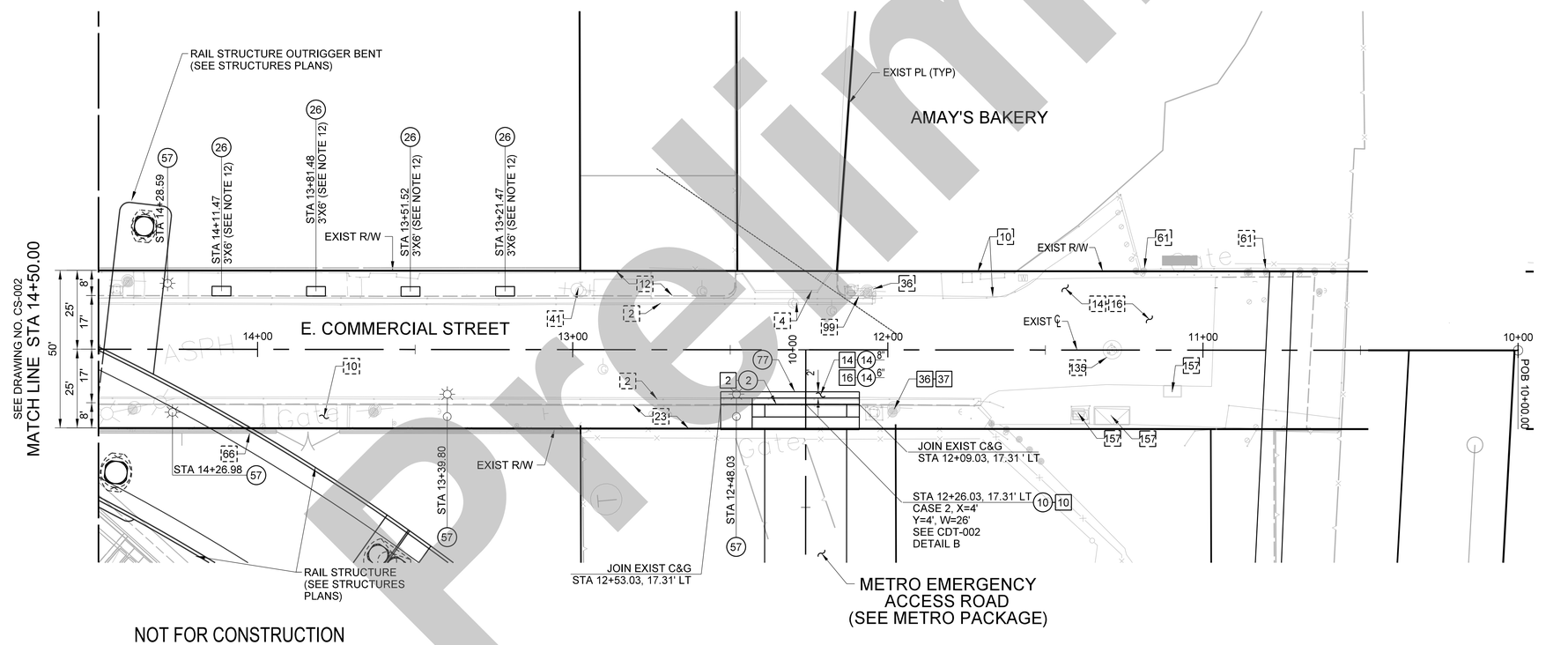

NOTES:

1. SEE UTILITY PLANS FOR EXIST AND PROPOSED UTILITIES.
2. SEE TRACK PLANS FOR TRACK RELATED WORK.
3. SEE STRUCTURES PLANS FOR BRIDGE AND RETAINING WALL WORK UNLESS SPECIFIED HEREIN.
4. ALL STREET SIGNS AND POSTS OR POLES TO BE REMOVED OR PROTECTED IN PLACE, ARE TO BE VERIFIED ON SIGNING STRIPING AND SIGNAL PLANS.
5. EXISTING ALISO STREET TO BECOME PART OF ACCESS ROAD SERVING AMAY'S BAKERY PROPERTY.
6. SEE DRAINAGE PLANS FOR PROPOSED GRADING.
7. RELOCATION AND REMOVAL OF INTERFERING OVERHEAD AND UNDERGROUND ELECTRICAL INFRASTRUCTURE ASSUMED TO BE COMPLETED BY LADWP AHEAD OF ROADWAY CONSTRUCTION SHOWN HEREIN.
8. SEE DEMOLITION PLANS FOR DETAILS ON EXISTING PRIVATE PROPERTY BUILDING AND SITE IMPROVEMENT REMOVALS
9. LIMITS OF REMOVALS INCLUDED IN PROPERTY DEMOLITIONS
10. EXISTING POWER POLES SHOWN AS TO BE REMOVED WILL BE REMOVED BY LADWP AHEAD OF CONSTRUCTION.
11. ALL SURFACE UTILITY APPURTENANCES ALONG ALISO STREET, INCLUDING MANHOLES AND VALVE COVERS, TO BE PROTECTED IN PLACE UNLESS OTHERWISE NOTED.
12. UNLESS OTHER WISE NOTED ON THESE PLANS, THE CONTRACTOR SHALL PLANT A MINIMUM OF 24-INCH BOX SIZE TREES OF SPECIES, QUANTITY, AND LOCATIONS APPROVED BY THE CITY OF LOS ANGELES PER STANDARD PLAN S-450-3, S-456 AND S-663. THE COVER SHALL BE DECOMPOSED GRANITE WHEN TREE WELL COVER IS NOT SPECIFIED ON THESE PLANS. LANDSCAPE CONSTRUCTION WITHIN THE PUBLIC RIGHT-OF-WAY SHALLCONFORM TO THE CITY'S LATEST PARKWAY LANDSCAPING GUIDELINES.

20' 10' 0' 20' 40'
GRAPHIC SCALE

NOT FOR CONSTRUCTION

Preliminary

THE CITY OF LOS ANGELES OR ITS OFFICERS OR AGENTS SHALL NOT BE RESPONSIBLE FOR THE ACCURACY OR COMPLETENESS OF ELECTRONIC COPIES OF THIS PLAN SHEET.

THE PREPARATION OF THIS DRAWING HAS BEEN FINANCED IN PART THROUGH A GRANT FROM THE U.S. DEPARTMENT OF TRANSPORTATION, FEDERAL TRANSIT ADMINISTRATION (FTA), UNDER THE FEDERAL TRANSIT ACT OF 1964, AS AMENDED, AND IN PART BY THE TAXES OF THE CITIZENS OF LOS ANGELES COUNTY AND OF THE STATE OF CALIFORNIA.

REVISION DATES (DESIGN STAGE ONLY)

REV	DATE	BY	APP	REG NO	EXPIRES	SEAL HOLDER	DESCRIPTION
A	2/21/25						60% INTERIM DESIGN - PROGRESS REVIEW

DESIGNED BY	JOSEPHUS RIMORIN
DRAWN BY	RUBEN VENEGAS
CHECKED BY	NOAH BUSCH
IN CHARGE	JOSEPHUS RIMORIN
DATE	02/21/2025

LOS ANGELES COUNTY METROPOLITAN TRANSPORTATION AUTHORITY
Metro

HDR ENGINEERING
350 S. GRAND AVENUE
SUITE 2900
LOS ANGELES, CA 90071
(213) 239-5800

V&A INC.
1111 S. GRAND AVE, SUITE 103
LOS ANGELES, CA 90015
213.972.9700

LINK UNION STATION PROJECT
ROADWAY IMPROVEMENTS
COMMERCIAL STREET
PLAN AND PROFILE
STA 10+00.00 TO STA 14+50.00

CONTRACT NO	PS2415-3172
DRAWING NO	CS-001
REV	0
SCALE	1"=20'
SHEET NO	

SHEET NO 99

CITY OF LOS ANGELES DEPARTMENT OF PUBLIC WORKS
BUREAU OF ENGINEERING
ENGINEERING
CITY OF LOS ANGELES

NO.	REVISIONS:	DATE:	BY:

WORK ACCEPTED | SERIAL NO. | INDEX NO.

BUREAU OF ENGINEERING APPROVAL:
METRO TRANSIT DIVISION
SIGNATURE: | DATE:

V&A INC.
DESIGN GROUP

ENGINEER:	JOSEPHUS RIMORIN	LIC. NO. C76982
DESIGNED BY:	JOSEPHUS RIMORIN	
DRAWN BY:	RUBEN VENEGAS	
CHECKED BY:	NOAH BUSCH	
APPROVED BY:		

VERTICAL CONTROL: BM 12-29331, 2000 ADJ., NAVD 1988
HORIZONTAL CONTROL:
SHEET TITLE: PUBLIC ROADWAY PLAN SHEET 1 OF 4
PROJECT: LINK UNION STATION PROJECT
ADDRESS:
2/19/2025
10.CS-001 LUS - Rdw

WORK ORDER NO.
SHEET OF SHEETS

Plotted by jrimorin

Sheet Version 2.01

THE CITY OF LOS ANGELES OR ITS OFFICERS OR AGENTS SHALL NOT BE RESPONSIBLE FOR THE ACCURACY OR COMPLETENESS OF ELECTRONIC COPIES OF THIS PLAN SHEET.

Preliminary

NOTES:

1. SEE UTILITY PLANS FOR EXIST AND PROPOSED UTILITIES.
2. SEE TRACK PLANS FOR TRACK RELATED WORK.
3. SEE STRUCTURES PLANS FOR BRIDGE AND RETAINING WALL WORK UNLESS SPECIFIED HEREIN.
4. ALL STREET SIGNS AND POSTS OR POLES TO BE REMOVED OR PROTECTED IN PLACE, ARE TO BE VERIFIED ON SIGNING STRIPPING AND SIGNAL PLANS.
5. MINIMUM 4" CMB SHALL BE PLACED UNDERNEATH PROPOSED SIDEWALK AND CURB RAMPS. 6" CMB SHALL BE PLACED UNDERNEATH ALL CURBS AND DRIVEWAYS.
6. RELOCATION AND REMOVAL OF INTERFERING OVERHEAD AND UNDERGROUND ELECTRICAL INFRASTRUCTURE ASSUMED TO BE COMPLETED BY LADWP AHEAD OF ROADWAY CONSTRUCTION SHOWN HEREIN.
7. REMOVE AND REPLACE IN KIND ANY INTERFERING PORTION OF EXISTING SIDEWALK
8. LONGITUDINAL SLOPE ALONG PED ACCESS RAMPS = 5%
9. ALL CURB HEIGHTS SHALL BE 6" UNLESS OTHERWISE SPECIFIED
10. CONTRACTOR TO COORDINATE WITH LADOT TO REMOVE PARKING METERS PER PLAN. CALL (877) 215-3958
11. UNLESS OTHER WISE NOTED ON THESE PLANS, THE CONTRACTOR SHALL PLANT A MINIMUM OF 24-INCH BOX SIZE TREES OF SPECIES, QUANTITY, AND LOCATIONS APPROVED BY THE CITY OF LOS ANGELES PER STANDARD PLAN S-450-3, S-456 AND S-663. THE COVER SHALL BE DECOMPOSED GRANITE WHEN TREE WELL COVER IS NOT SPECIFIED ON THESE PLANS. LANDSCAPE CONSTRUCTION WITHIN THE PUBLIC RIGHT-OF-WAY SHALLCONFORM TO THE CITY'S LATEST PARKWAY LANDSCAPING GUIDELINES.
12. SEE TRAFFIC PLANS FOR STRIPING AND SIGNAGE

PROFILE

HORIZ. SCALE: 1"=20'
VERT. SCALE: 1"=4'

CONSTRUCTION SYMBOLS

- CONSTRUCT
- EXISTING
- REMOVE
- REMODEL EXISTING
- REMOVE & CONSTRUCT
- WORK BY OTHERS

CONSTRUCTION NOTES:

1 - CONCRETE CURB
2 - TYPE C INTERGRAL CURB & GUTTER
10 - CONCRETE DRIVEWAY
12 - CONCRETE WALK
13 - CURB RAMP
14 - ASPHALT CONCRETE PAVEMENT
16 - CRUSHED MISCELLANEOUS BASE
20 - TREE
21 - 2" COLD PLANE (MILL) AC PAVEMENT
23 - GRADE ONLY
26 - TREE WELL
33 - PARKING METER (SEE NOTE 12)
34 - 2" THICK AC PAVEMENT
36 - UTILITY POLE
38 - STREET LIGHTING PULL BOX
41 - FIRE HYDRANT
57 - STREET LIGHTING POLE
60 - TRUNCATED DOMES
63 - GUY WIRE
65 - CHAIN LINK FENCE
68 - CHAIN LINK GATE
77 - SAWCUT LINE & JOIN
81 - CURBSIDE GRATING BASIN
93 - SIDEWALK CULVERT
99 - SIDE OPENING CATCH BASIN
174 - UNKNOWN VAULT
177 - CONCRETE MEDIAN

CURVE DATA TABLE

No.	RADIUS	DELTA	LENGTH	TANGENT
1	38.00'	12°23'55"	8.27'	4.15'
2	45.00'	90°04'15"	70.74'	45.06'
3	2.00'	163°31'37"	5.71'	13.82'
4	70.00'	39°53'32"	48.74'	25.40'
5	2.00'	130°51'05"	4.57'	4.37'

NOT FOR CONSTRUCTION

CURVE DATA TABLE

No.	RADIUS	DELTA	LENGTH	TANGENT
6	4.00'	108°32'42"	7.58'	5.56'
7	520.00'	03°01'52"	27.51'	13.76'
8	500.00'	03°15'32"	28.44'	14.22'
9	5.00'	85°40'24"	7.48'	4.64'
10	40.00'	65°06'34"	45.46'	25.54'
11	12.00'	86°10'07"	18.05'	11.22'

THE PREPARATION OF THIS DRAWING HAS BEEN FINANCED IN PART THROUGH A GRANT FROM THE U.S. DEPARTMENT OF TRANSPORTATION, FEDERAL TRANSIT ADMINISTRATION (FTA), UNDER THE FEDERAL TRANSIT ACT OF 1964, AS AMENDED, AND IN PART BY THE TAXES OF THE CITIZENS OF LOS ANGELES COUNTY AND OF THE STATE OF CALIFORNIA.

REV	DATE	BY	APP	REG NO	EXPIRES	SEAL HOLDER	DESCRIPTION
A	2/21/25						60% INTERIM DESIGN - PROGRESS REVIEW

DESIGNED BY: JOSEPHUS RIMORIN
DRAWN BY: RUBEN VENEGAS
CHECKED BY: NOAH BUSCH
IN CHARGE: JOSEPHUS RIMORIN
DATE: 02/21/2025

LOS ANGELES COUNTY METROPOLITAN TRANSPORTATION AUTHORITY
Metro
HDR ENGINEERING
350 S. GRAND AVENUE
SUITE 2900
LOS ANGELES, CA 90071
(213) 239-5800
V&A INC.
1111 S. GRAND AVE, SUITE 103
LOS ANGELES, CA 90015
213.972.9700

LINK UNION STATION PROJECT
ROADWAY IMPROVEMENTS
COMMERCIAL STREET
ROADWAY PLAN AND PROFILE
STA 14+50 TO STA 19+00

CONTRACT NO: PS2415-3172
DRAWING NO: CS-002
REV: 0
SCALE: 1"=20'
SHEET NO

CITY OF LOS ANGELES DEPARTMENT OF PUBLIC WORKS
BUREAU OF ENGINEERING
ENGINEERING
CITY OF LOS ANGELES

NO.	REVISIONS:	DATE:	BY:

WORK ACCEPTED | DATE: | SERIAL NO.
INDEX NO.

BUREAU OF ENGINEERING APPROVAL:
METRO TRANSIT DIVISION
SIGNATURE: | DATE:
VERTICAL CONTROL: BM 12-29331, 2000 ADJ. NAVD 1988
HORIZONTAL CONTROL:

V&A INC.
DESIGN GROUP
ENGINEER: JOSEPHUS RIMORIN | LIC. NO. C76082
DESIGNED BY: JOSEPHUS RIMORIN
DRAWN BY: RUBEN VENEGAS
CHECKED BY: NOAH BUSCH
APPROVED BY:

SHEET TITLE: PUBLIC ROADWAY PLAN SHEET 2 OF 4
PROJECT: LINK UNION STATION PROJECT
ADDRESS:
2/19/2025
09_CS-002 LUS - Rd
Plotted by jrimorin

WORK ORDER NO.
SHEET OF SHEETS

SHEET NO 100

Sheet Version 2.01

THE CITY OF LOS ANGELES OR ITS OFFICERS OR AGENTS SHALL NOT BE RESPONSIBLE FOR THE ACCURACY OR COMPLETENESS OF ELECTRONIC COPIES OF THIS PLAN SHEET.

Preliminary

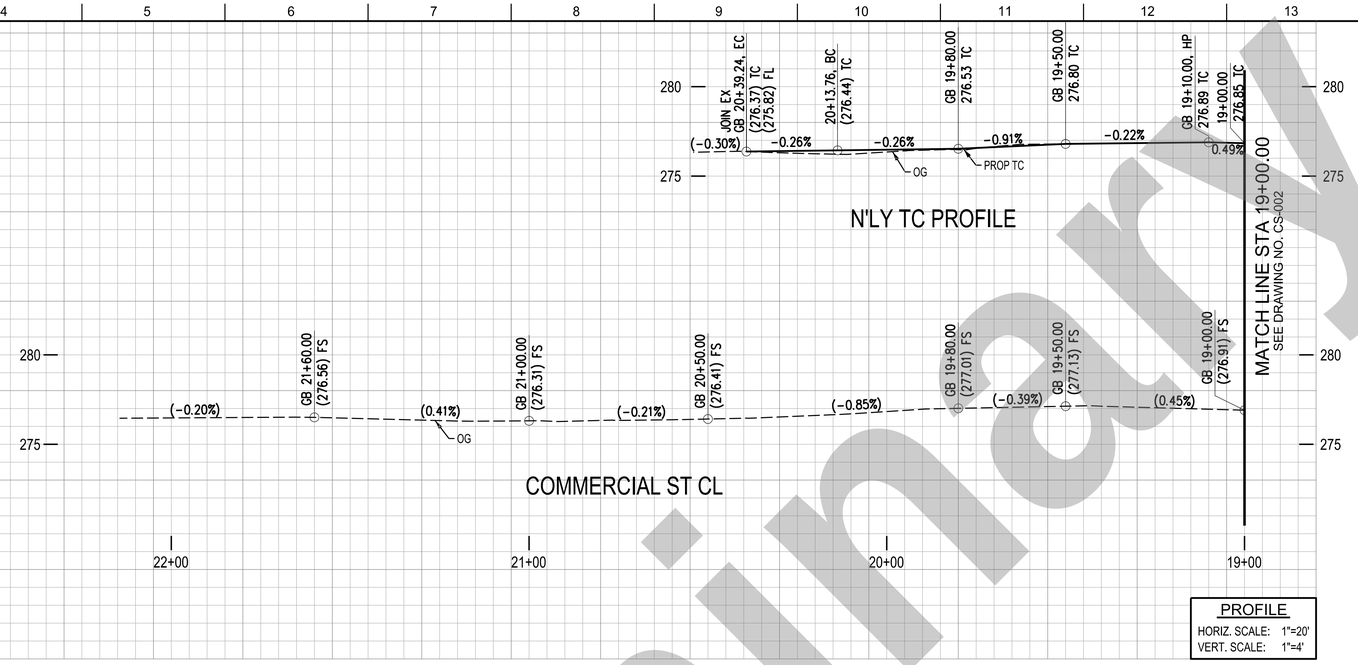

CONSTRUCTION SYMBOLS

- CONSTRUCT
- EXISTING
- REMOVE
- REMODEL EXISTING
- REMOVE & CONSTRUCT
- WORK BY OTHERS

CONSTRUCTION NOTES:

1 - CONCRETE CURB
2 - TYPE C INTERGRAL CURB & GUTTER
10 - CONCRETE DRIVEWAY
12 - CONCRETE WALK
13 - CURB RAMP
14 - ASPHALT CONCRETE PAVEMENT
16 - CRUSHED MISCELLANEOUS BASE
20 - TREE
26 - TREE WELL
33 - PARKING METER (SEE NOTE 12)
36 - UTILITY POLE
38 - STREET LIGHTING PULL BOX
57 - STREET LIGHTING POLE
60 - TRUNCATED DOMES
65 - CHAIN LINK FENCE
68 - CHAIN LINK GATE
77 - SAWCUT LINE & JOIN
93 - SIDEWALK CULVERT

CURVE DATA TABLE

No.	RADIUS	DELTA	LENGTH	TANGENT
1	15.00'	89°53'26"	23.53'	14.97'
2	20.00'	25°51'09"	9.02'	4.59'
3	15.00'	25°44'37"	6.74'	3.42'
4	504.86'	02°53'31"	25.48'	12.74'

PROFILE
HORIZ. SCALE: 1"=20'
VERT. SCALE: 1"=4'

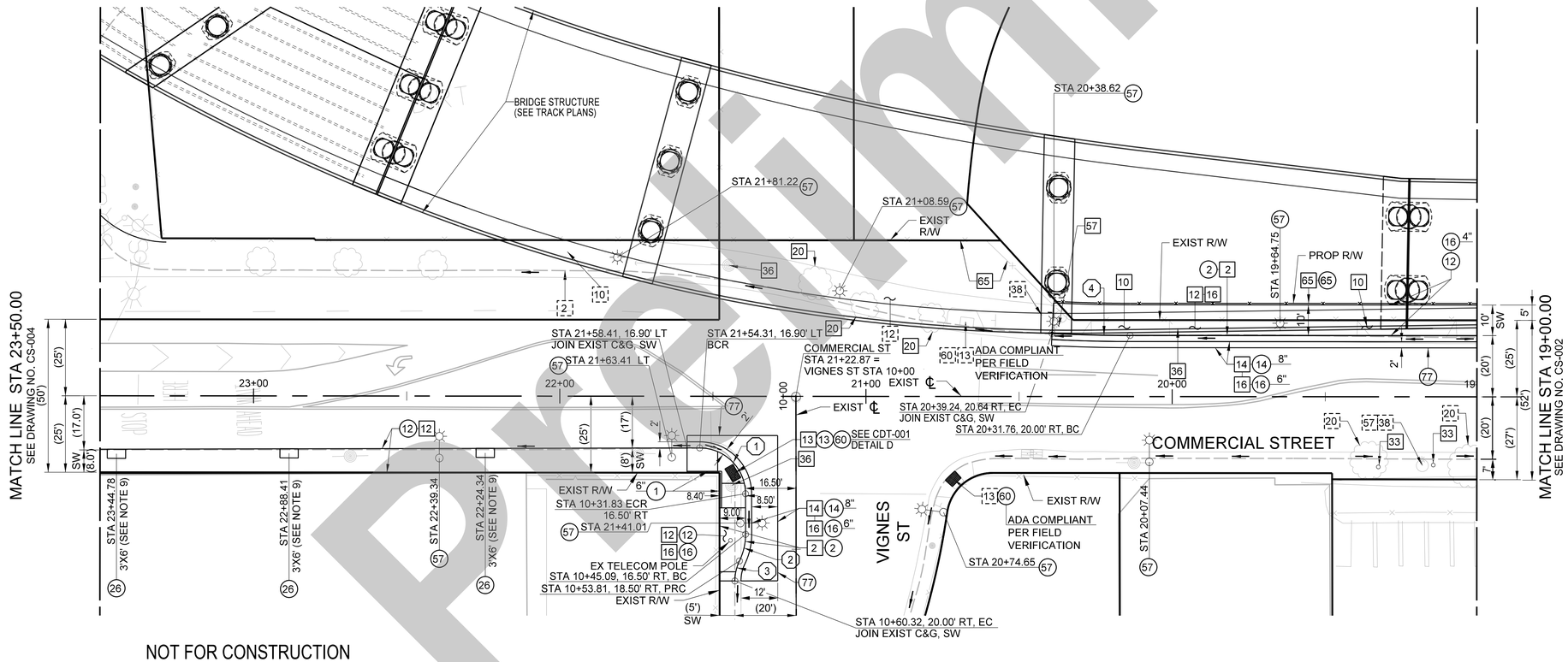

NOTES:

1. SEE UTILITY PLANS FOR EXIST AND PROPOSED UTILITIES.
2. SEE TRACK PLANS FOR TRACK RELATED WORK.
3. SEE STRUCTURES PLANS FOR BRIDGE AND RETAINING WALL WORK UNLESS SPECIFIED HEREIN.
4. ALL STREET SIGNS AND POSTS OR POLES TO BE REMOVED OR PROTECTED IN PLACE, ARE TO BE VERIFIED ON SIGNING STRIPING AND SIGNAL PLANS.
5. MINIMUM 4" CMB SHALL BE PLACED UNDERNEATH PROPOSED SIDEWALK AND CURB RAMPS. 6" CMB SHALL BE PLACED UNDERNEATH ALL CURBS AND DRIVEWAYS.
6. RELOCATION AND REMOVAL OF INTERFERING OVERHEAD AND UNDERGROUND ELECTRICAL INFRASTRUCTURE ASSUMED TO BE COMPLETED BY LADWP AHEAD OF ROADWAY CONSTRUCTION SHOWN HEREIN.
7. ALL CURB HEIGHTS SHALL BE 6" UNLESS OTHERWISE SPECIFIED
8. CONTRACTOR TO COORDINATE WITH LADOT TO REMOVE PARKING METERS PER PLAN. CALL (877) 215-3958
9. UNLESS OTHER WISE NOTED ON THESE PLANS, THE CONTRACTOR SHALL PLANT A MINIMUM OF 24-INCH BOX SIZE TREES OF SPECIES, QUANTITY, AND LOCATIONS APPROVED BY THE CITY OF LOS ANGELES PER STANDARD PLAN S-450-3, S-456 AND S-663. THE COVER SHALL BE DECOMPOSED GRANITE WHEN TREE WELL COVER IS NOT SPECIFIED ON THESE PLANS. LANDSCAPE CONSTRUCTION WITHIN THE PUBLIC RIGHT-OF-WAY SHALLCONFORM TO THE CITY'S LATEST PARKWAY LANDSCAPING GUIDELINES.

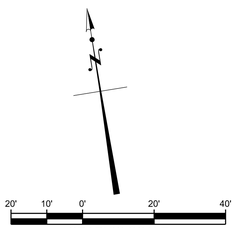

NOT FOR CONSTRUCTION

THE PREPARATION OF THIS DRAWING HAS BEEN FINANCED IN PART THROUGH A GRANT FROM THE U.S. DEPARTMENT OF TRANSPORTATION, FEDERAL TRANSIT ADMINISTRATION (FTA), UNDER THE FEDERAL TRANSIT ACT OF 1964, AS AMENDED, AND IN PART BY THE TAXES OF THE CITIZENS OF LOS ANGELES COUNTY AND OF THE STATE OF CALIFORNIA.

REVISION DATES (DESIGN STAGE ONLY)

REV	DATE	BY	APP	REG NO	EXPIRES	SEAL HOLDER	DESCRIPTION
A	2/21/25						60% INTERIM DESIGN - PROGRESS REVIEW

DESIGNED BY	JOSEPHUS RIMORIN
DRAWN BY	RUBEN VENEGAS
CHECKED BY	NOAH BUSCH
IN CHARGE	JOSEPHUS RIMORIN
DATE	02/21/2025

LOS ANGELES COUNTY METROPOLITAN TRANSPORTATION AUTHORITY
Metro

HDR ENGINEERING
350 S. GRAND AVENUE
SUITE 2900
LOS ANGELES, CA 90071
(213) 239-5800

V&A INC.
1111 S. GRAND AVE, SUITE 103
LOS ANGELES, CA 90015
213.972.9700

LINK UNION STATION PROJECT
ROADWAY IMPROVEMENTS
COMMERCIAL STREET
PLAN AND PROFILE
STA 19+00 TO STA 23+50

CONTRACT NO
PS2415-3172

DRAWING NO	REV
CS-003	0

SCALE
1"=20'

SHEET NO

SHEET NO 101

CITY OF LOS ANGELES DEPARTMENT OF PUBLIC WORKS
BUREAU OF ENGINEERING
ENGINEERING
CITY OF LOS ANGELES

NO.	REVISIONS:	DATE:	BY:

WORK ACCEPTED
SERIAL NO.
INDEX NO.

BUREAU OF ENGINEERING APPROVAL:
METRO TRANSIT DIVISION
SIGNATURE:
DATE:

VERTICAL CONTROL: BM 12-29331, 2000 ADJ. NAVD 1988
HORIZONTAL CONTROL:

SHEET TITLE: PUBLIC ROADWAY PLAN SHEET 1 OF 4
PROJECT: LINK UNION STATION PROJECT
ADDRESS:

V&A INC.
DESIGN GROUP

ENGINEER:	JOSEPHUS RIMORIN	LIC. NO. C78082
DESIGNED BY:	JOSEPHUS RIMORIN	
DRAWN BY:	RUBEN VENEGAS	
CHECKED BY:	NOAH BUSCH	
APPROVED BY:		

2/19/2025
08_CS-003 LUS - Rdw
Plotted by jrimorin

WORK ORDER NO.

SHEET OF SHEETS

Sheet Version 2.01

THE CITY OF LOS ANGELES OR ITS OFFICERS OR AGENTS SHALL NOT BE RESPONSIBLE FOR THE ACCURACY OR COMPLETENESS OF ELECTRONIC COPIES OF THIS PLAN SHEET.

Preliminary

CONSTRUCTION SYMBOLS

- CONSTRUCT
- EXISTING
- REMOVE
- REMODEL EXISTING
- REMOVE & CONSTRUCT
- WORK BY OTHERS

CONSTRUCTION NOTES:

1 - CONCRETE CURB
2 - TYPE C INTERGRAL CURB & GUTTER
12 - CONCRETE WALK
13 - CURB RAMP
14 - ASPHALT CONCRETE PAVEMENT
16 - CRUSHED MISCELLANEOUS BASE
36 - UTILITY POLE
60 - TRUNCATED DOMES
77 - SAWCUT LINE & JOIN
99 - SIDE OPENING CATCH BASIN

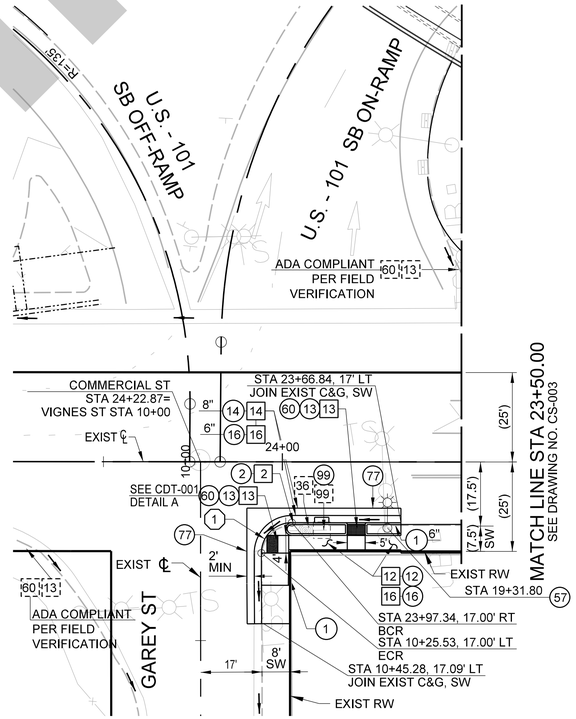

CURVE DATA TABLE

No.	RADIUS	DELTA	LENGTH	TANGENT
1	8.50'	90°04'00"	13.36'	8.51'

NOTES:

1. SEE UTILITY PLANS FOR EXIST AND PROPOSED UTILITIES.
2. SEE TRACK PLANS FOR TRACK RELATED WORK.
3. SEE STRUCTURES PLANS FOR BRIDGE AND RETAINING WALL WORK UNLESS SPECIFIED HEREIN.
4. ALL STREET SIGNS AND POSTS OR POLES TO BE REMOVED OR PROTECTED IN PLACE, ARE TO BE VERIFIED ON SIGNING STRIPING AND SIGNAL PLANS.
5. MINIMUM 4" CMB SHALL BE PLACED UNDERNEATH PROPOSED SIDEWALK AND CURB RAMPS. 6" CMB SHALL BE PLACED UNDERNEATH ALL CURBS AND DRIVEWAYS.
6. RELOCATION AND REMOVAL OF INTERFERING OVERHEAD AND UNDERGROUND ELECTRICAL INFRASTRUCTURE ASSUMED TO BE COMPLETED BY LADWP AHEAD OF ROADWAY CONSTRUCTION SHOWN HEREIN.
7. ALL CURB HEIGHTS SHALL BE 6" UNLESS OTHERWISE SPECIFIED
8. CONTRACTOR TO COORDINATE WITH LADOT TO REMOVE PARKING METERS PER PLAN. CALL (877) 215-3958
9. UNLESS OTHER WISE NOTED ON THESE PLANS, THE CONTRACTOR SHALL PLANT A MINIMUM OF 24-INCH BOX SIZE TREES OF SPECIES, QUANTITY, AND LOCATIONS APPROVED BY THE CITY OF LOS ANGELES PER STANDARD PLAN S-450-3, S-456 AND S-663. THE COVER SHALL BE DECOMPOSED GRANITE WHEN TREE WELL COVER IS NOT SPECIFIED ON THESE PLANS. LANDSCAPE CONSTRUCTION WITHIN THE PUBLIC RIGHT-OF-WAY SHALLCONFORM TO THE CITY'S LATEST PARKWAY LANDSCAPING GUIDELINES.
10. FOR THE FWY 101 ON-OFF RAMPS TRAFFIC WORK DETAIL, SEE CALTRANS AND CITY PLANS.

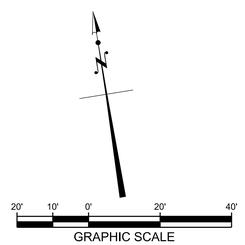

NOT FOR CONSTRUCTION

THE PREPARATION OF THIS DRAWING HAS BEEN FINANCED IN PART THROUGH A GRANT FROM THE U.S. DEPARTMENT OF TRANSPORTATION, FEDERAL TRANSIT ADMINISTRATION (FTA), UNDER THE FEDERAL TRANSIT ACT OF 1964, AS AMENDED, AND IN PART BY THE TAXES OF THE CITIZENS OF LOS ANGELES COUNTY AND OF THE STATE OF CALIFORNIA.

REV	DATE	BY	APP	REG NO	EXPIRES	SEAL HOLDER	DESCRIPTION
A	2/21/25						60% INTERIM DESIGN - PROGRESS REVIEW

DESIGNED BY: JOSEPHUS RIMORIN
DRAWN BY: RUBEN VENEGAS
CHECKED BY: NOAH BUSCH
IN CHARGE: JOSEPHUS RIMORIN
DATE: 02/21/2025

REVISION DATES (DESIGN STAGE ONLY)

LOS ANGELES COUNTY METROPOLITAN TRANSPORTATION AUTHORITY
Metro

HDR ENGINEERING
350 S. GRAND AVENUE
SUITE 2900
LOS ANGELES, CA 90071
(213) 239-5800

V&A INC.
1111 S. GRAND AVE, SUITE 103
LOS ANGELES, CA 90015
213.972.9700

LINK UNION STATION PROJECT
ROADWAY IMPROVEMENTS
COMMERCIAL STREET
PLAN AND PROFILE
STA 23+50.00 TO STA 24+22.87

CONTRACT NO: PS2415-3172
DRAWING NO: CS-004
REV: 0
SCALE: 1"=20'
SHEET NO

CITY OF LOS ANGELES DEPARTMENT OF PUBLIC WORKS
BUREAU OF ENGINEERING

ENGINEERING
CITY OF LOS ANGELES

REVISIONS: NO. | DATE: | BY:
WORK ACCEPTED | SERIAL NO.

INDEX NO.

BUREAU OF ENGINEERING APPROVAL:
METRO TRANSIT DIVISION
SIGNATURE: | DATE:

V&A INC.
DESIGN GROUP
ENGINEER: JOSEPHUS RIMORIN LIC. NO. C78082
DESIGNED BY: JOSEPHUS RIMORIN
DRAWN BY: RUBEN VENEGAS
CHECKED BY: NOAH BUSCH
APPROVED BY:

VERTICAL CONTROL: BM 12-29331, 2000 ADJ. NAVD 1988
HORIZONTAL CONTROL:
SHEET TITLE: PUBLIC ROADWAY PLAN SHEET 1 OF 4
PROJECT: LINK UNION STATION PROJECT
ADDRESS:

WORK ORDER NO.
SHEET OF SHEETS

2/19/2025
07.CS-0041LUS - Rd4
Plotted by:jrimorin

Sheet Version 2.01

SHEET NO 102

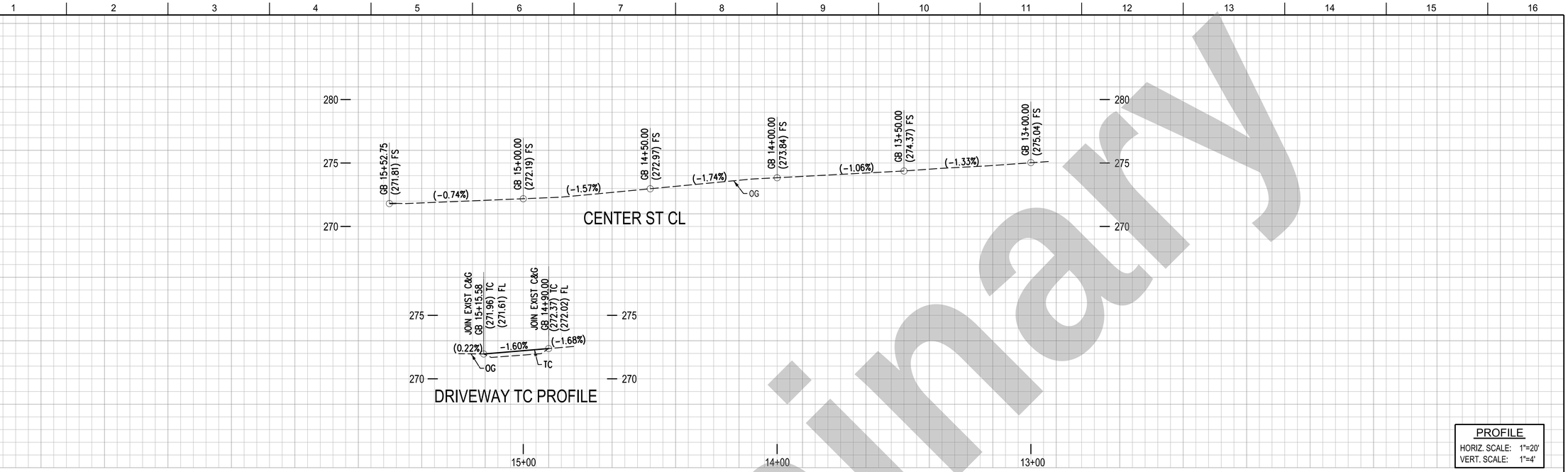

PROFILE
HORIZ. SCALE: 1"=20'
VERT. SCALE: 1"=4'

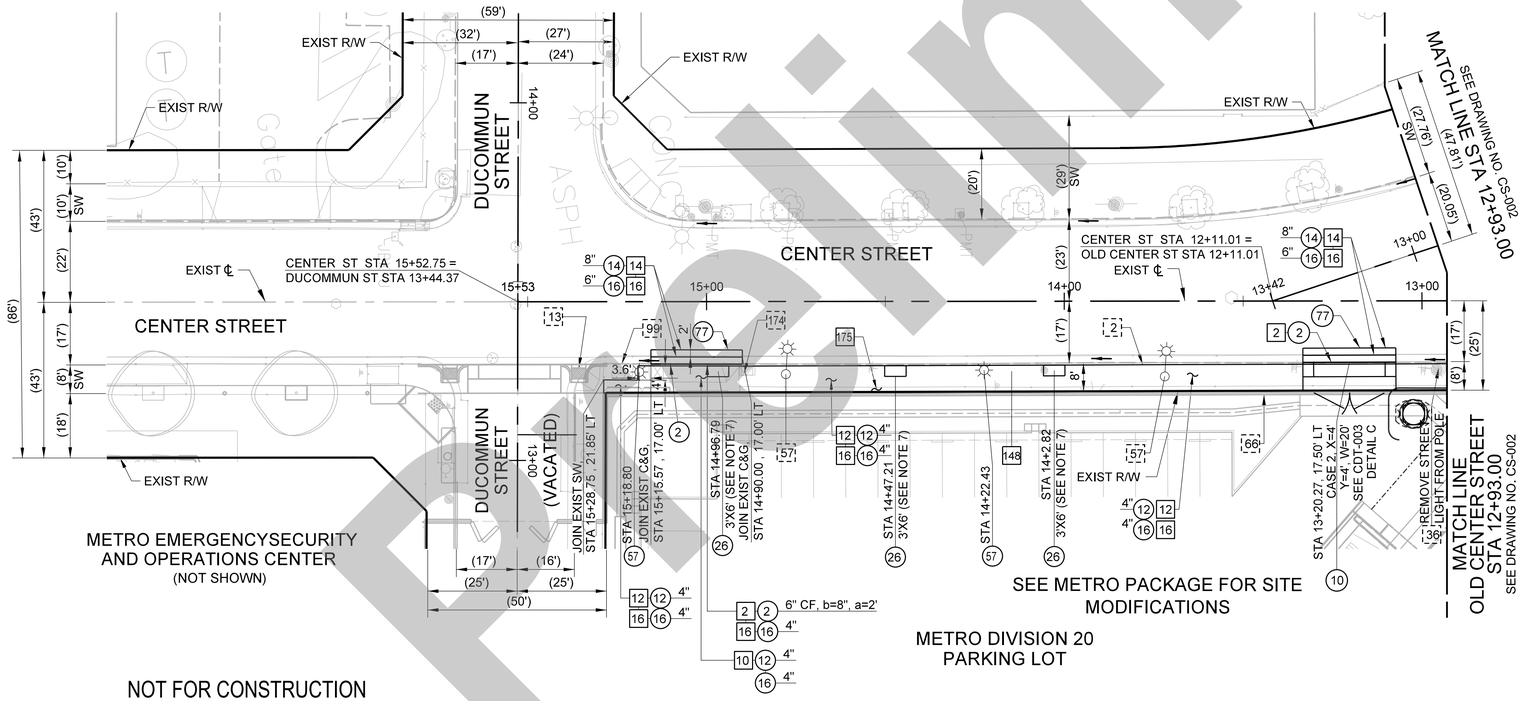

CONSTRUCTION NOTES:

2 - TYPE C INTERGRAL CURB & GUTTER
10 - CONCRETE DRIVEWAY
12 - CONCRETE WALK
13 - CURB RAMP
14 - ASPHALT CONCRETE PAVEMENT
16 - CRUSHED MISCELLANEOUS BASE
26 - TREE WELL
57 - STREET LIGHTING POLE
66 - CONRETE MASONRY BLOCK WALL
77 - SAWCUT LINE & JOIN
99 - SIDE OPENING CATCH BASIN
148 - LIGHT POLE
174 - UNKNOWN VAULT
175 - SHRUBS

CONSTRUCTION SYMBOLS

CONSTRUCT
EXISTING
REMOVE
REMODEL EXISTING
REMOVE & CONSTRUCT
WORK BY OTHERS

NOTES:

1. SEE UTILITY PLANS FOR EXIST AND PROPOSED UTILITIES.
2. SEE TRACK PLANS FOR TRACK RELATED WORK.
3. SEE STRUCTURES PLANS FOR BRIDGE AND RETAINING WALL WORK UNLESS SPECIFIED HEREIN.
4. ALL STREET SIGNS AND POSTS OR POLES TO BE REMOVED OR PROTECTED IN PLACE, ARE TO BE VERIFIED ON SIGNING STRIPING AND SIGNAL PLANS.
5. RELOCATION AND REMOVAL OF INTERFERING OVERHEAD AND UNDERGROUND ELECTRICAL INFRASTRUCTURE ASSUMED TO BE COMPLETED BY LADWP AHEAD OF ROADWAY CONSTRUCTION SHOWN HEREIN.
6. ALL SURFACE UTILITY APPURTENANCES ALONG ALISO STREET, INCLUDING MANHOLES AND VALVE COVERS, TO BE PROTECTED IN PLACE UNLESS OTHERWISE NOTED.
7. UNLESS OTHERWISE NOTED ON THESE PLANS, THE CONTRACTOR SHALL PLANT A MINIMUM OF 24-INCH BOX SIZE TREES OF SPECIES, QUANTITY, AND LOCATIONS APPROVED BY THE CITY OF LOS ANGELES PER STANDARD PLAN S-450-3, S-456 AND S-663. THE COVER SHALL BE DECOMPOSED GRANITE WHEN TREE WELL COVER IS NOT SPECIFIED ON THESE PLANS. LANDSCAPE CONSTRUCTION WITHIN THE PUBLIC RIGHT-OF-WAY SHALL CONFORM TO THE CITY'S LATEST PARKWAY LANDSCAPING GUIDELINES.

20' 10' 0' 20' 40'
GRAPHIC SCALE

NOT FOR CONSTRUCTION

Preliminary

THE CITY OF LOS ANGELES OR ITS OFFICERS OR AGENTS SHALL NOT BE RESPONSIBLE FOR THE ACCURACY OR COMPLETENESS OF ELECTRONIC COPIES OF THIS PLAN SHEET.

REVISION DATES (DESIGN STAGE ONLY)

REV	DATE	BY	APP	REG NO	EXPIRES	SEAL HOLDER	DESCRIPTION
A	2/21/25						60% INTERIM DESIGN - PROGRESS REVIEW

THE PREPARATION OF THIS DRAWING HAS BEEN FINANCED IN PART THROUGH A GRANT FROM THE U.S. DEPARTMENT OF TRANSPORTATION, FEDERAL TRANSIT ADMINISTRATION (FTA), UNDER THE FEDERAL TRANSIT ACT OF 1964, AS AMENDED, AND IN PART BY THE TAXES OF THE CITIZENS OF LOS ANGELES COUNTY AND OF THE STATE OF CALIFORNIA.

DESIGNED BY	JOSEPHUS RIMORIN
DRAWN BY	RUBEN VENEGAS
CHECKED BY	NOAH BUSCH
IN CHARGE	JOSEPHUS RIMORIN
DATE	02/21/2025

LOS ANGELES COUNTY METROPOLITAN TRANSPORTATION AUTHORITY
Metro
HDR ENGINEERING
350 S. GRAND AVENUE
SUITE 2900
LOS ANGELES, CA 90071
(213) 239-5800
V&A INC.
1111 S. GRAND AVE, SUITE 103
LOS ANGELES, CA 90015
213.972.9700

LINK UNION STATION PROJECT
ROADWAY IMPROVEMENTS
OLD CENTER STREET
PLAN AND PROFILE
STA 12+93.00 TO STA 15+52.75

CONTRACT NO	PS2415-3172
DRAWING NO	CS-005
REV	0
SCALE	1"=20'
SHEET NO	

SHEET OF SHEETS

SHEET NO 103

Sheet Version 2.01

BUREAU OF ENGINEERING
ENGINEERING
CITY OF LOS ANGELES
NO. REVISIONS: DATE: BY:
WORK ACCEPTED
SERIAL NO.
INDEX NO.
BUREAU OF ENGINEERING APPROVAL:
METRO TRANSIT DIVISION
SIGNATURE: DATE:
HORIZONTAL CONTROL: BM 12-28331, 2000 ADJ., NAVD 1988
VERTICAL CONTROL:
SHEET TITLE: PUBLIC ROADWAY PLAN SHEET 4 OF 4
PROJECT: LINK UNION STATION PROJECT
ADDRESS:
V&A INC.
DESIGN GROUP
ENGINEER: JOSEPHUS RIMORIN LIC. NO. C76982
DESIGNED BY: JOSEPHUS RIMORIN
DRAWN BY: RUBEN VENEGAS
CHECKED BY: NOAH BUSCH
APPROVED BY:
WORK ORDER NO.
2/19/2025
11_ICS-0059 LUS-Rdwy
Plotted by jrimorin
CITY OF LOS ANGELES DEPARTMENT OF PUBLIC WORKS

NOTES:

1. LENGTH OF DESIGN: 1000'±
2. PAINT REMOVAL REQUIRED.
3. 6" X 4' WHITE STRIPE (AS NOTED) WITH 8' GAP (TYPICAL).
4. 4" X 4' WHITE STRIPE (AS NOTED) WITH 8' GAP (TYPICAL).
5. 8" X 3' WHITE STRIPE (AS NOTED) WITH 12' GAP (TYPICAL).
6. 5' X 4' HOLLYWOOD GREEN BIKE LANE STRIPING WITH 8' GAP (TYPICAL).
7. CONTRACTOR SHALL SLURRY SEAL LIMITS OF STRIPING IMPROVEMENTS PER BROWN BOOK REQUIREMENTS.

[8] CONTINENTAL CROSSWALK PER LADOT STD. DWG. NO. S-481.1.

[9] YELLOW TWO-WAY LEFT TURN STRIPING PER 2014 CA MUTCD DETAIL 31.

[10] READJUST EXISTING OVERHEAD SIGN TO ALIGN ARROW WITH PROPOSED NO.1 LANE ONLY.

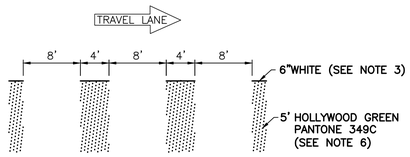

DETAIL "A"
SCALE: 1"=10'

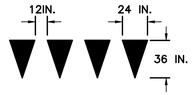

DETAIL "D"
NOT TO SCALE

CONSTRUCTION NOTES:

1. THE CONTRACTOR SHALL BE RESPONSIBLE FOR LABOR AND MATERIAL INVOLVED IN THE REMOVAL, MARKOUT, AND INSTALLATION OF ALL STRIPING, PAVEMENT MARKINGS, CURB MARKINGS AND SIGNS SHOWN HEREON. REMOVAL OF MARKINGS SHALL BE PERFORMED BEFORE MARKOUT AND INSTALLATION OF NEW STRIPING AND SHALL BE BY WET SANDBLASTING/GRINDING IN ACCORDANCE WITH LOS ANGELES DEPARTMENT OF TRANSPORTATION (LADOT) SPECIFICATION NO. 76-016-10. MARKOUT SHALL BE BY SPRAY PAINT OR HEAVY PAINT BRUSH MARKINGS OVER A PULLED ROPE IN THE RESPECTIVE WHITE OR YELLOW COLORS OF THE PROPOSED STRIPING. FINAL STRIPING AND PAVEMENT MARKINGS SHALL BE IN HOT APPLIED ALKYD THERMOPLASTIC IN ACCORDANCE WITH LADOT SPECIFICATIONS NOS. 51-005-10 AND 76-012-16.
2. DURING ALL PHASES OF CONSTRUCTION, TEMPORARY RAISED OVERLAY PAVEMENT MARKERS SHALL BE MAINTAINED ADJACENT TO ANY TEMPORARY CENTERLINE, MARKOUT CENTERLINE, TAPED CENTERLINE, OR TO THE SCAR OF A SANDBLASTED CENTERLINE, AS APPLICABLE, AS PER LADOT STANDARD PLAN NO. S-453.0.
3. THE INSTALLATION OF THERMOPLASTIC STRIPING MAY PROCEED ONLY AFTER INSPECTION AND APPROVAL OF MARKOUT BY THE LADOT TEMPORARY TRAFFIC MANAGEMENT SECTION. THE CONTRACTOR SHALL CORRECT ALL ERRORS IN MARKOUT REQUESTED BY LADOT. UPON APPROVAL OF MARKOUT THE CONTRACTOR SHALL FULLY INSTALL THE THERMOPLASTIC STRIPING, PAVEMENT MARKINGS, CURB MARKINGS, AND SIGNS (AS APPLICABLE) WITHIN THE FOLLOWING THREE (3) WORKING DAYS. THE CONTRACTOR SHALL CONTACT THE LADOT TEMPORARY TRAFFIC MANAGEMENT SECTION AT GHASSAN.CHOUEIRY@LACITY.ORG AT THE FOLLOWING POINTS IN TIME AND FOR THE FOLLOWING PURPOSES:
   A. TEN (10) WORKING DAYS IN ADVANCE OF MARKOUT.
   B. UPON COMPLETION OF MARKOUT (INCLUDING ANY MARKOUT CORRECTIONS) FOR INSPECTION AND APPROVAL.
   C. UPON COMPLETION OF THERMOPLASTIC STRIPING (INCLUDING ANY THERMOPLASTIC STRIPING CORRECTIONS) FOR INSPECTION AND FINAL STRIPING APPROVAL.
4. THE FIELD CONDITIONS SHOWN AS EXISTING ON THIS PLAN MAY CHANGE BETWEEN THE PLAN APPROVAL DATE AND THE IMPLEMENTATION DATE. THE CONTRACTOR MAY BE REQUIRED TO INSTALL OR REMOVE STRIPING, PAVEMENT MARKINGS, SIGNS, OR OTHER TRAFFIC CONTROL DEVICES BEYOND THOSE INDICATED ON THIS PLAN, IN ORDER TO FACILITATE THESE CHANGES IN FIELD CONDITIONS AND/OR TO BE IN COMPLIANCE WITH LADOT STANDARDS AND SPECIFICATIONS.
5. CONTRACTOR SHALL CONTACT THE LADOT PARKING METER DIVISION, (213) 473-8270, TEN (10) WORKING DAYS PRIOR TO THE START OF, AND, AT THE END OF CONSTRUCTION, TO ARRANGE AND COORDINATE FOR ANY PARKING METER/PAY STATION RELATED WORK. THESE ARE WORK WHICH INCLUDES, BUT ARE NOT LIMITED TO, TEMPORARY OR PERMANENT INSTALLATION, REMOVAL, AND RELOCATION OF PARKING METERS, PAY STATIONS, SIGNS, METER/SIGN POSTS, CURB PARKING SPACE NUMBERS, CURB PAINTINGS, ETC. THE INSTALLATION, RELOCATION, AND REMOVAL COSTS WILL BE DEDUCTED FROM THE CONTRACTOR'S DEPOSIT TO THE PROJECT FUND ACCOUNT; OR IF NONE, THROUGH INVOICE PAYMENT TO THE LADOT PARKING METER DIVISION. FAILURE TO NOTIFY LADOT WILL MAKE THE CONTRACTOR LIABLE FOR ALL MISSING OR DAMAGED PARKING METERS, PAY STATIONS, SIGNS, ETC., THAT THE LADOT RECORDS INDICATE WERE PRESENT. CONTRACTOR MAY REMOVE AND DISPOSE OF THE PARKING METER POSTS IN CONJUNCTION WITH THEIR SIDEWALK DEMOLITION WORK, BUT ONLY AFTER LADOT HAD REMOVED THE PARKING METER HEADS AND ANY METER-POST-MOUNTED SIGNS, WHERE APPLICABLE.
6. CONTRACTOR SHALL INSPECT AND ENSURE THAT THE FINAL ROADWAY SURFACE IS IN GOOD CONDITION PRIOR TO BIKE LANE INSTALLATION.

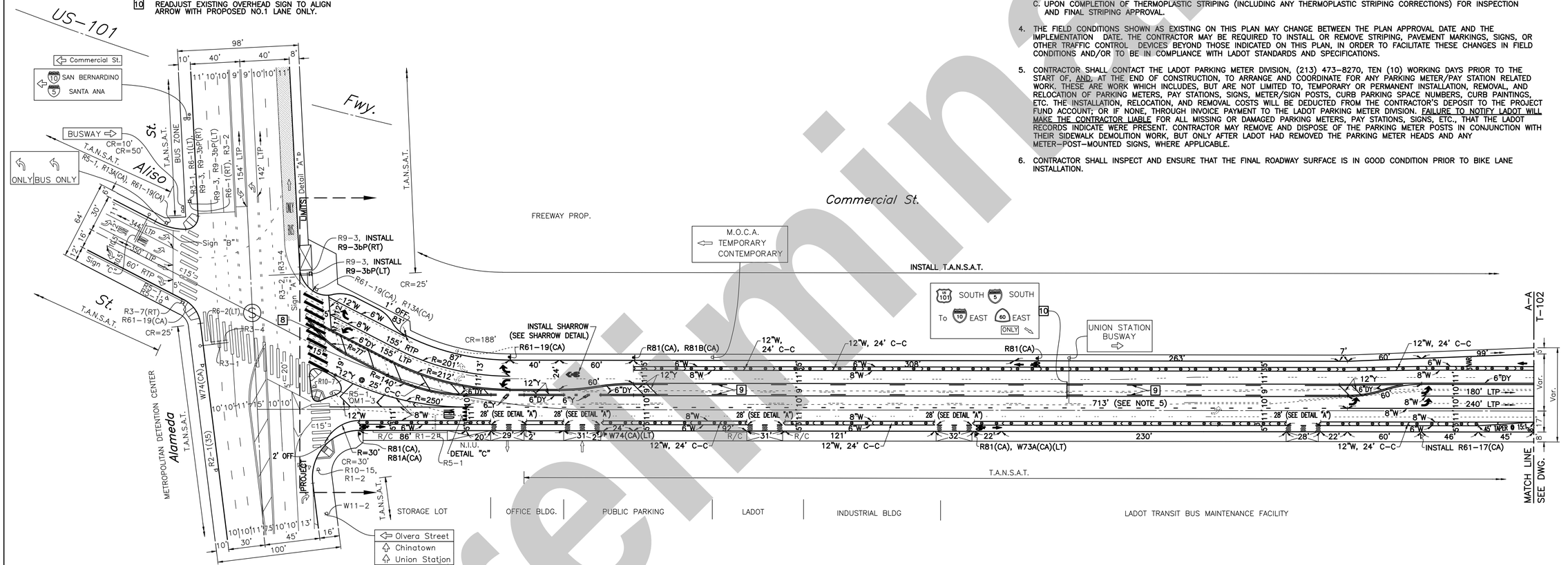



Sign "A"
Not to Scale

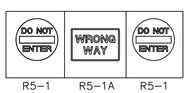

Sign "B"
Not to Scale



Sign "C"
Not to Scale

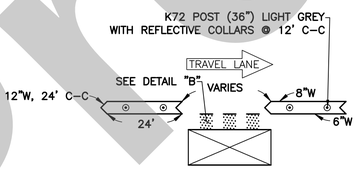

BIKE LANE BUFFER DETAIL
NOT TO SCALE

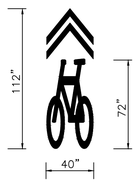

SHARROW DETAIL
NOT TO SCALE

SCALE: 1"=40"

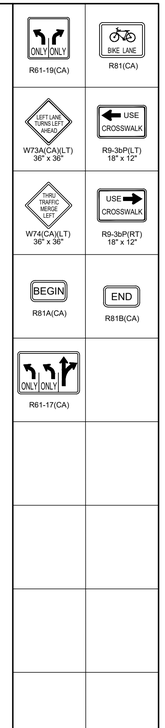

ACCEPTED _____ 20 _____

Transportation Engineer

INSTALLATION DATES	
MARKOUT BEGAN:	
MARKOUT COMPLETED:	
STRIPING COMPLETED:	
District:	CENTRAL
Thomas Guide:	634-G3
References:	A-6896, A-7675, A-8132, FIELD CHECK

CITY OF LOS ANGELES
DEPARTMENT OF TRANSPORTATION
LAURA RUBIO-CORNEJO, GENERAL MANAGER

COMMERCIAL ST.
BETWEEN ALAMEDA ST. AND CENTER ST.

IF THIS PLAN HAS NOT BEEN IMPLEMENTED WITHIN TWO (2) YEARS OF THE ACCEPTANCE DATE, IT MUST BE RESUBMITTED TO LADOT METRO PROGRAMS DIVISION FOR REVIEW.

PROJECT NO. PCM14007 | DRAWING NO. T-101 | 1 / 2

NO.	REVISION DESCRIPTION	DATE	BY
DISTRICT	BIKEWAYS		

REVIEWED: T.E.A. T.E. S.T.E. T.E. DATE

REV	DATE	BY	APP	REG NO	EXPIRES	SEAL HOLDER	DESCRIPTION
A							

DESIGNED BY L. LOERA
DRAWN BY E. PEREZ
CHECKED BY A. GAYTAN
IN CHARGE I. PEREZ
DATE 02/21/2025

ISIDRO PEREZ JR. — REG. NO. 91818 — Exp. 12/31/26 — CIVIL — STATE OF CALIFORNIA

MIGUEL ANGEL GAYTAN II — REG. NO. 2534 — Exp. 09/30/25 — TRAFFIC — STATE OF CALIFORNIA

Metro — LOS ANGELES COUNTY METROPOLITAN TRANSPORTATION AUTHORITY

V&A INC. — 1111 S. GRAND AVE. SUITE 103, LOS ANGELES, CA 90015, 213.972.9700

HDR ENGINEERING — 350 S. GRAND AVENUE SUITE 2600, LOS ANGELES, CA 90071, (213) 239-5800

LINK UNION STATION PROJECT
SIGNING & STRIPING RESTORATION

COMMERCIAL ST.
BETWEEN ALAMEDA ST. AND CENTER ST.

CONTRACT NO PS2415-3172
DRAWING NO T-101 | REV 0
SCALE 1" = 40'
SHEET NO 104

LA TAX REGISTRATION #: 0002496950-0001-2

1"=20' ORIGINAL MAP SCALE 1"=40"
20 10 0 20 40 60 80 100 FEET
40 20 0 40 80 120 160 200 FEET

SCALES | HORIZ. 1"= | VERT. 1"=

SHEET

INDEX NUMBER

Preliminary

NOTES:

1. LENGTH OF DESIGN: 1600'±
2. PAINT REMOVAL REQUIRED.
3. 6" X 4' WHITE STRIPE (AS NOTED) WITH 8' GAP (TYPICAL).
4. 4" X 4' WHITE STRIPE (AS NOTED) WITH 8' GAP (TYPICAL).
6. 5' X 4' HOLLYWOOD GREEN BIKE LANE STRIPING WITH 8' GAP (TYPICAL).
7. CONTRACTOR SHALL SLURRY SEAL LIMITS OF STRIPING IMPROVEMENTS PER BROWN BOOK REQUIREMENTS.

[8] CONTINENTAL CROSSWALK PER LADOT STD. DWG. NO. S-481.1.

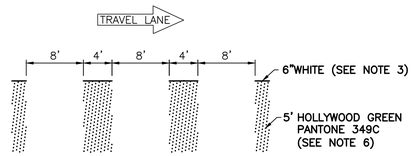

DETAIL "A"
SCALE: 1"=10'

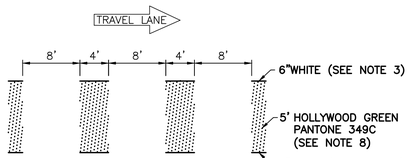

DETAIL "B"
SCALE: 1"=10'



DETAIL "C"
NOT TO SCALE

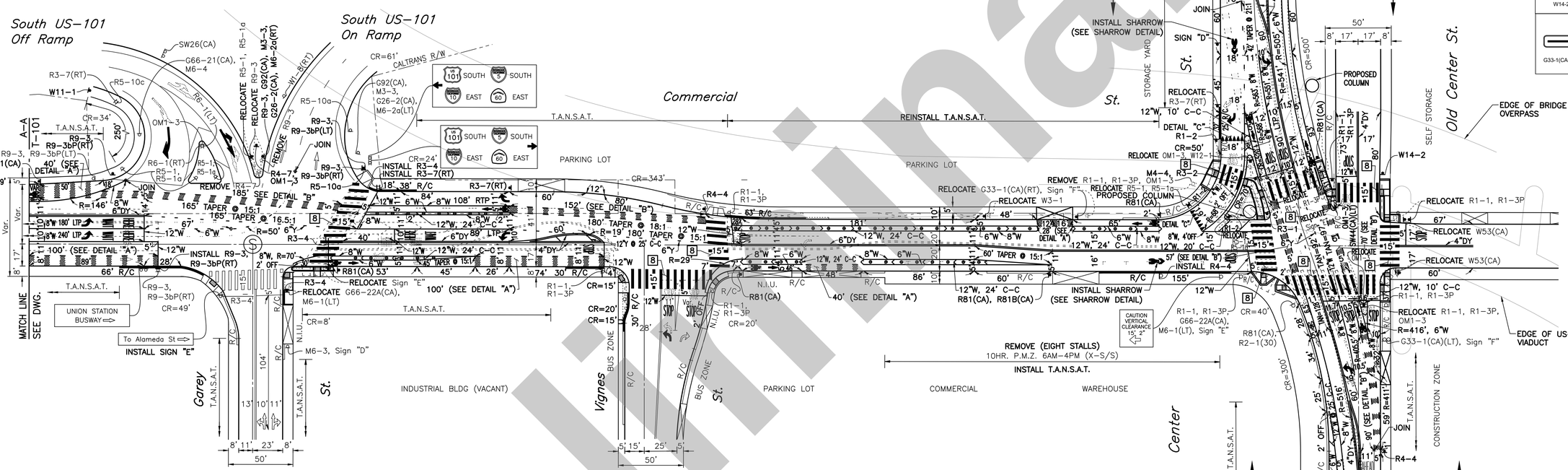

SIGN "D"
NOT TO SCALE
4C WHITE LEGEND ON GREEN REFLECTORIZED BACKGROUND

SIGN "E"
NOT TO SCALE

A							
REV	DATE	BY	APP	REG NO	EXPIRES	SEAL HOLDER	DESCRIPTION

DESIGNED BY L. LOERA
DRAWN BY E. PEREZ
CHECKED BY A. GAYTAN
IN CHARGE I. PEREZ
DATE 02/21/2025

REGISTERED PROFESSIONAL ENGINEER ISIDRO PEREZ JR. No. 91818 Exp. 12/31/26 CIVIL STATE OF CALIFORNIA

REGISTERED PROFESSIONAL ENGINEER MIGUEL ANGEL GAYTAN No. 2534 Exp. 06/30/25 TRAFFIC STATE OF CALIFORNIA

Metro
LOS ANGELES COUNTY METROPOLITAN TRANSPORTATION AUTHORITY

V&A INC.
1111 S. GRAND AVE. SUITE 103
LOS ANGELES, CA 90015
213.972.9700

HDR ENGINEERING
350 S. GRAND AVENUE SUITE 2500
LOS ANGELES, CA 90071
(213) 228-5800

LINK UNION STATION PROJECT
SIGNING & STRIPING RESTORATION
COMMERCIAL ST.
BETWEEN ALAMEDA ST. AND CENTER ST.

CONTRACT NO PS2415-3172
DRAWING NO T-102
REV 0
SCALE 1" = 40'
SHEET NO 105

LA TAX REGISTRATION #: 0002496950-0001-2

1"=20' ORIGINAL MAP SCALE 1"=40'
20 10 0 20 40 60 80 100 FEET
40 20 0 40 80 120 160 200 FEET

SCALES HORIZ. 1"= VERT. 1"=

SHEET

INDEX NUMBER

ACCEPTED _____ 20 _____
Transportation Engineer

INSTALLATION DATES
MARKOUT BEGAN: _____
MARKOUT COMPLETED: _____
STRIPING COMPLETED: _____
District: CENTRAL
Thomas Guide: 634-H3, 634-H4
References: A-6896, FIELD CHECK

CITY OF LOS ANGELES
DEPARTMENT OF TRANSPORTATION
LAURA RUBIO-CORNEJO, GENERAL MANAGER

COMMERCIAL ST.
BETWEEN ALAMEDA ST. AND CENTER ST.

IF THIS PLAN HAS NOT BEEN IMPLEMENTED WITHIN TWO (2) YEARS OF THE ACCEPTANCE DATE, IT MUST BE RESUBMITTED TO LADOT METRO PROGRAMS DIVISION FOR REVIEW.

PROJECT NO. PCM14007
DRAWING NO. T-102
2 / 2

REVIEWED T.E.A. T.E. S.T.E.
DATE BY DISTRICT BIKEWAYS
REVISION DESCRIPTION DATE T.E. NO.

Preliminary!

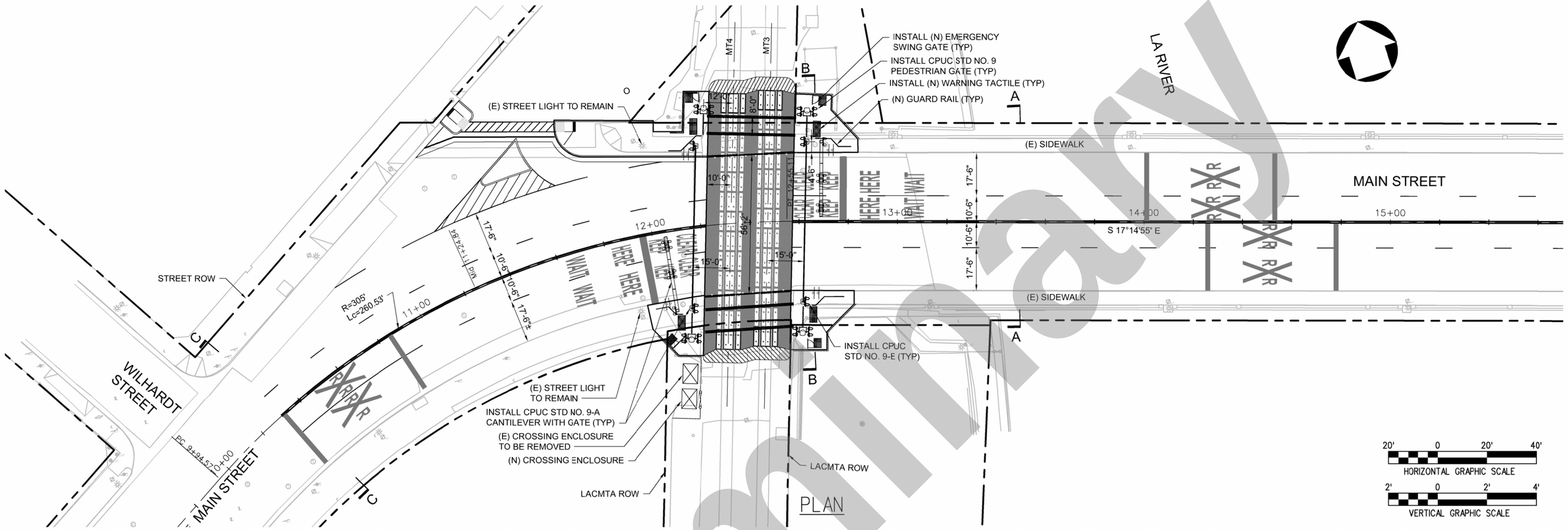

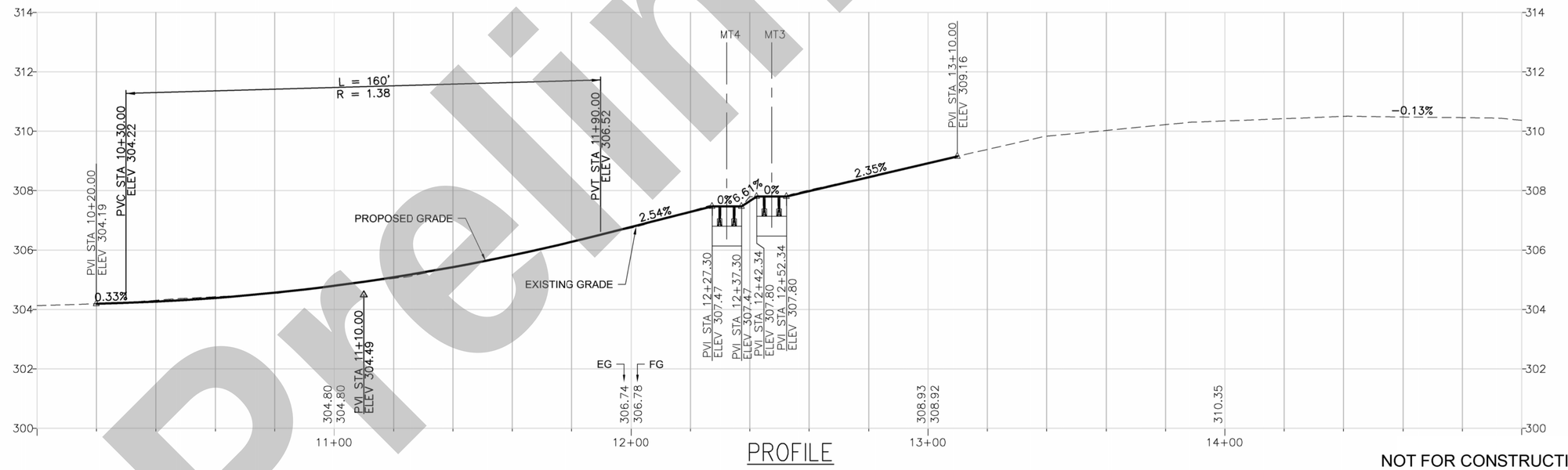

PROFILE

NOT FOR CONSTRUCTION

Preliminary

THE PREPARATION OF THIS DRAWING HAS BEEN FINANCED IN PART THROUGH A GRANT FROM THE U.S. DEPARTMENT OF TRANSPORTATION, FEDERAL TRANSIT ADMINISTRATION (FTA), UNDER THE FEDERAL TRANSIT ACT OF 1964, AS AMENDED, AND IN PART BY THE TAXES OF THE CITIZENS OF LOS ANGELES COUNTY AND OF THE STATE OF CALIFORNIA.

REV	DATE	BY	APP	REG NO	EXPIRES	SEAL HOLDER	DESCRIPTION

DESIGNED BY Z. DANG
DRAWN BY Z. DANG
CHECKED BY J. MA
IN CHARGE P. LECNG
DATE 02/21/2025

LOS ANGELES COUNTY METROPOLITAN TRANSPORTATION AUTHORITY

RSE CORPORATION 223 W FOOTHILL BLVD CLAREMONT, CA 91711 WWW.RSECORP.COM

HDR ENGINEERING 350 S. GRAND AVENUE SUITE 2900 LOS ANGELES, CA 90071 (213) 239-5800

LINK UNION STATION PROJECT

RIVER SUBDIVISION WEST BANK LINE
NORTH MAIN STREET
MP 101RI-1.18 DOT# 027607D
ROADWAY LAYOUT AND PROFILE

CONTRACT NO PS2415-3172
DRAWING NO C102
REV 0
SCALE H: 1"=20' V: 1"=2'
SHEET NO 106

2/18/2025 7:03:16 PM USER = JMA
L:\PROJECT20\HDR\24091604-CAD\SHEETS\MS-C102.DWG

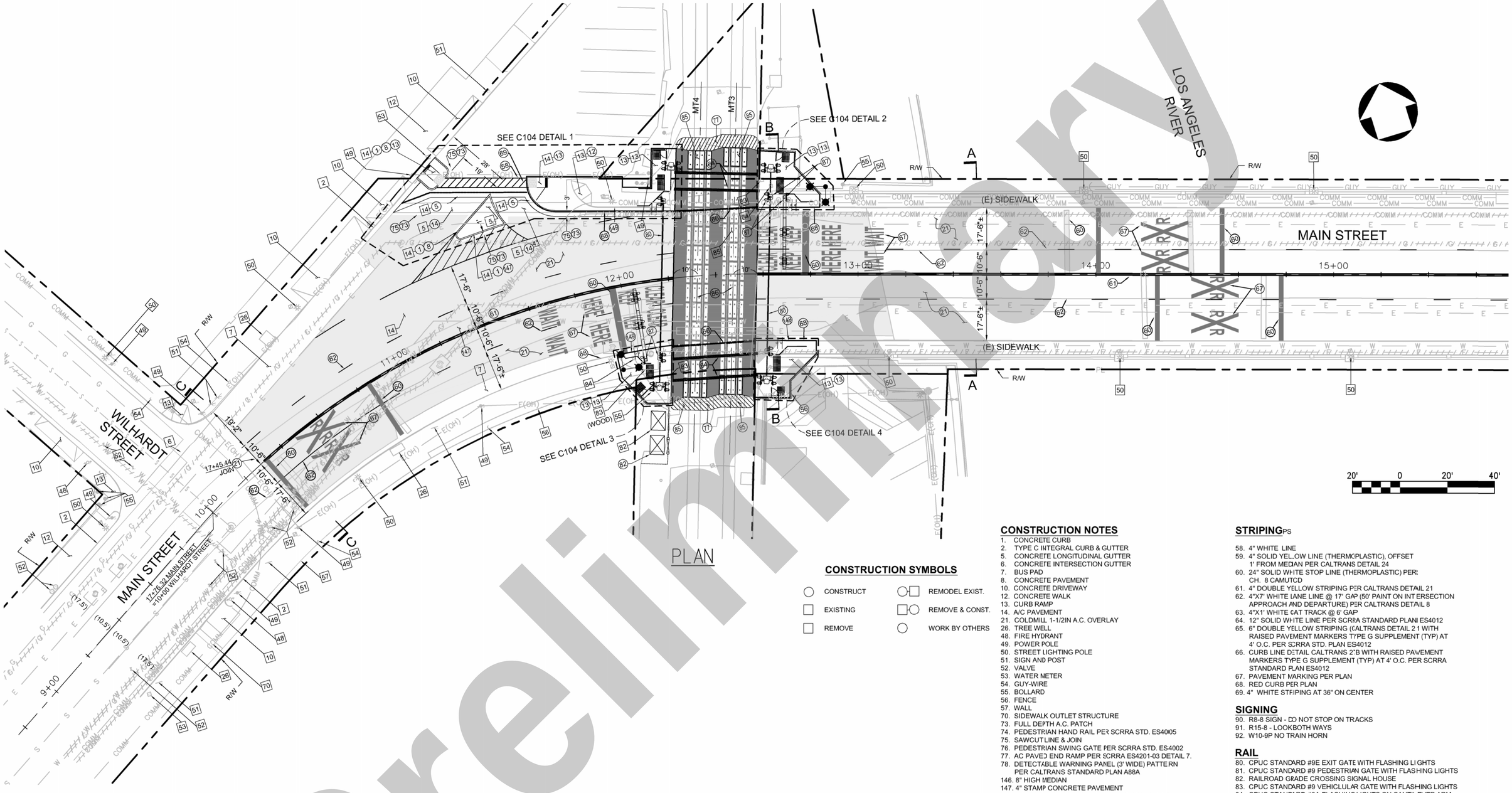

PLAN

CONSTRUCTION SYMBOLS

○ CONSTRUCT	○□ REMODEL EXIST.
□ EXISTING	□○ REMOVE & CONST.
□ REMOVE	○ WORK BY OTHERS

CONSTRUCTION NOTES

1. CONCRETE CURB
2. TYPE C INTEGRAL CURB & GUTTER
5. CONCRETE LONGITUDINAL GUTTER
6. CONCRETE INTERSECTION GUTTER
7. BUS PAD
8. CONCRETE PAVEMENT
10. CONCRETE DRIVEWAY
12. CONCRETE WALK
13. CURB RAMP
14. A/C PAVEMENT
21. COLDMILL 1-1/2IN A.C. OVERLAY
26. TREE WELL
48. FIRE HYDRANT
49. POWER POLE
50. STREET LIGHTING POLE
51. SIGN AND POST
52. VALVE
53. WATER METER
54. GUY-WIRE
55. BOLLARD
56. FENCE
57. WALL
70. SIDEWALK OUTLET STRUCTURE
73. FULL DEPTH A.C. PATCH
74. PEDESTRIAN HAND RAIL PER SCRRA STD. ES4005
75. SAWCUT LINE & JOIN
76. PEDESTRIAN SWING GATE PER SCRRA STD. ES-4002
77. AC PAVED END RAMP PER SCRRA ES4201-03 DETAIL 7.
78. DETECTABLE WARNING PANEL (3' WIDE) PATTERN PER CALTRANS STANDARD PLAN A88A
146. 8" HIGH MEDIAN
147. 4" STAMP CONCRETE PAVEMENT
149. INTEGRAL CURB & GUTTER PER CITY STD. AND SCRRA STD. PLAN ES4001
150. 4' WELDED WIRE MESH FENCING PER SCRRA STD ES5105
151. RETAINING CURB
152. RETAINING WALL

STRIPING PS

58. 4" WHITE LINE
59. 4" SOLID YELLOW LINE (THERMOPLASTIC), OFFSET 1' FROM MEDIAN PER CALTRANS DETAIL 24
60. 24" SOLID WHITE STOP LINE (THERMOPLASTIC) PER CH. 8 CAMUTCD
61. 4" DOUBLE YELLOW STRIPING PER CALTRANS DETAIL 21
62. 4"X7' WHITE LANE LINE @ 17' GAP (50' PAINT ON INTERSECTION APPROACH AND DEPARTURE) PER CALTRANS DETAIL 8
63. 4"X1' WHITE CAT TRACK @ 6' GAP
64. 12" SOLID WHITE LINE PER SCRRA STANDARD PLAN ES4012
65. 6" DOUBLE YELLOW STRIPING (CALTRANS DETAIL 21 WITH RAISED PAVEMENT MARKERS TYPE G SUPPLEMENT (TYP) AT 4' O.C. PER SCRRA STD. PLAN ES4012
66. CURB LINE DETAIL CALTRANS 2'B WITH RAISED PAVEMENT MARKERS TYPE G SUPPLEMENT (TYP) AT 4' O.C. PER SCRRA STANDARD PLAN ES4012
67. PAVEMENT MARKING PER PLAN
68. RED CURB PER PLAN
69. 4" WHITE STRIPING AT 36" ON CENTER

SIGNING

90. R8-8 SIGN - DO NOT STOP ON TRACKS
91. R15-8 - LOOK BOTH WAYS
92. W10-9P NO TRAIN HORN

RAIL

80. CPUC STANDARD #9E EXIT GATE WITH FLASHING LIGHTS
81. CPUC STANDARD #9 PEDESTRIAN GATE WITH FLASHING LIGHTS
82. RAILROAD GRADE CROSSING SIGNAL HOUSE
83. CPUC STANDARD #9 VEHICLULAR GATE WITH FLASHING LIGHTS
84. CPUC STANDARD #8A FLASHING LIGHTS ON CANTILEVER ARM
85. GRADE CROSSING PANEL
86. RAILROAD TRACK
87. CPUC STANDARD #9A VEHICULAR GATE WITH CANTILEVER SIGNALS

STREET LIGHT

50. DUAL - LED STREET LIGHT

NOT FOR CONSTRUCTION

Preliminary

THE PREPARATION OF THIS DRAWING HAS BEEN FINANCED IN PART THROUGH A GRANT FROM THE U.S. DEPARTMENT OF TRANSPORTATION, FEDERAL TRANSIT ADMINISTRATION (FTA), UNDER THE FEDERAL TRANSIT ACT OF 1964, AS AMENDED, AND IN PART BY THE TAXES OF THE CITIZENS OF LOS ANGELES COUNTY AND OF THE STATE OF CALIFORNIA.

REV	DATE	BY	APP	REG NO	EXPIRES	SEAL HOLDER	DESCRIPTION

DESIGNED BY Z. DANG
DRAWN BY Z. DANG
CHECKED BY J. MA
IN CHARGE P. LECNG
DATE 02/21/2025

Metro
LOS ANGELES COUNTY METROPOLITAN TRANSPORTATION AUTHORITY
RSE CORPORATION 223 W FOOTHILL BLVD CLAREMONT, CA 91711 WWW.RSECORP.COM
HDR ENGINEERING 350 S. GRAND AVENUE SUITE 2900 LOS ANGELES, CA 90071 (213) 239-5800

LINK UNION STATION PROJECT
RIVER SUBDIVISION WEST BANK LINE
NORTH MAIN STREET
MP 101RI-1.18 DOT# 027607D
ROADWAY IMPROVEMENTS PLAN

CONTRACT NO PS2415-3172
DRAWING NO C103 | REV 0
SCALE AS SHOWN
SHEET NO 107

2/19/2025 7:01:53 PM USER = JMA
L:\PROJECT20\HDR240916\04-CAD\SHEETSIMS-C103.DWG

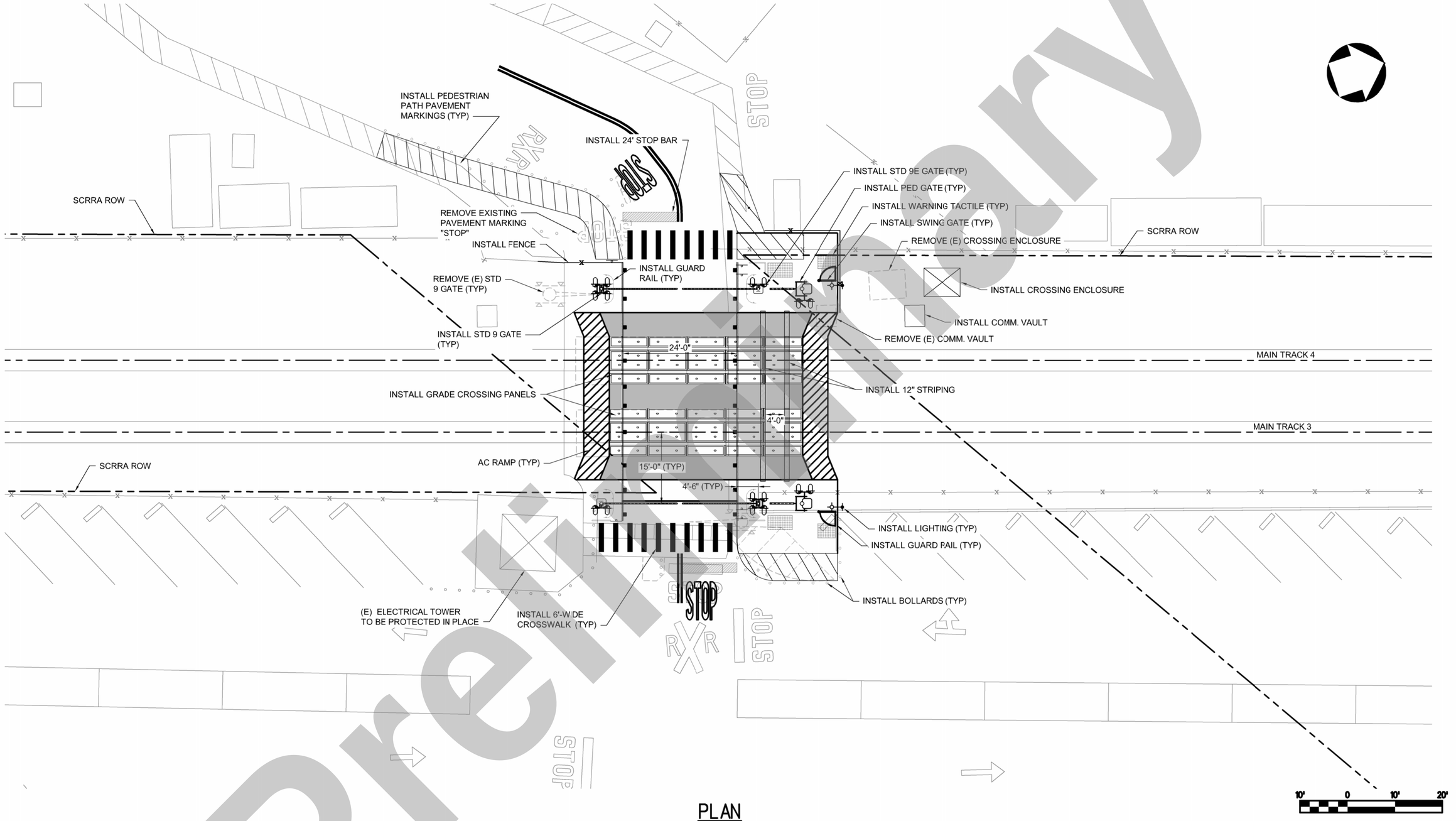

PLAN

NOT FOR CONSTRUCTION

Preliminary

THE PREPARATION OF THIS DRAWING HAS BEEN FINANCED IN PART THROUGH A GRANT FROM THE U.S. DEPARTMENT OF TRANSPORTATION, FEDERAL TRANSIT ADMINISTRATION (FTA), UNDER THE FEDERAL TRANSIT ACT OF 1964, AS AMENDED, AND IN PART BY THE TAXES OF THE CITIZENS OF LOS ANGELES COUNTY AND OF THE STATE OF CALIFORNIA.

REV	DATE	BY	APP	REG NO	EXPIRES	SEAL HOLDER	DESCRIPTION

DESIGNED BY: Z. DANG
DRAWN BY: Z. DANG
CHECKED BY: J. MA
IN CHARGE: P. LECNG
DATE: 02/21/2025

Metro
LOS ANGELES COUNTY METROPOLITAN TRANSPORTATION AUTHORITY

RSE CORPORATION
223 W FOOTHILL BLVD
CLAREMONT, CA 91711
www.RSECORP.COM

HDR ENGINEERING
350 S. GRAND AVENUE
SUITE 2900
LOS ANGELES, CA 90071
(213) 239-5800

LINK UNION STATION PROJECT
RIVER SUBDIVISION WEST BANK LINE
DWP PRIVATE CROSSING
MP 101RI-1.11-X DOT# 027608K
ROADWAY LAYOUT

CONTRACT NO: PS2415-3172
DRAWING NO: C201
REV: 0
SCALE: AS SHOWN
SHEET NO: 108

2/18/2025 7:40:29 PM USER = JMA
L:\PROJECT\20\HDR\24091604-CAD\SHEETS\DWP-C201.DWG

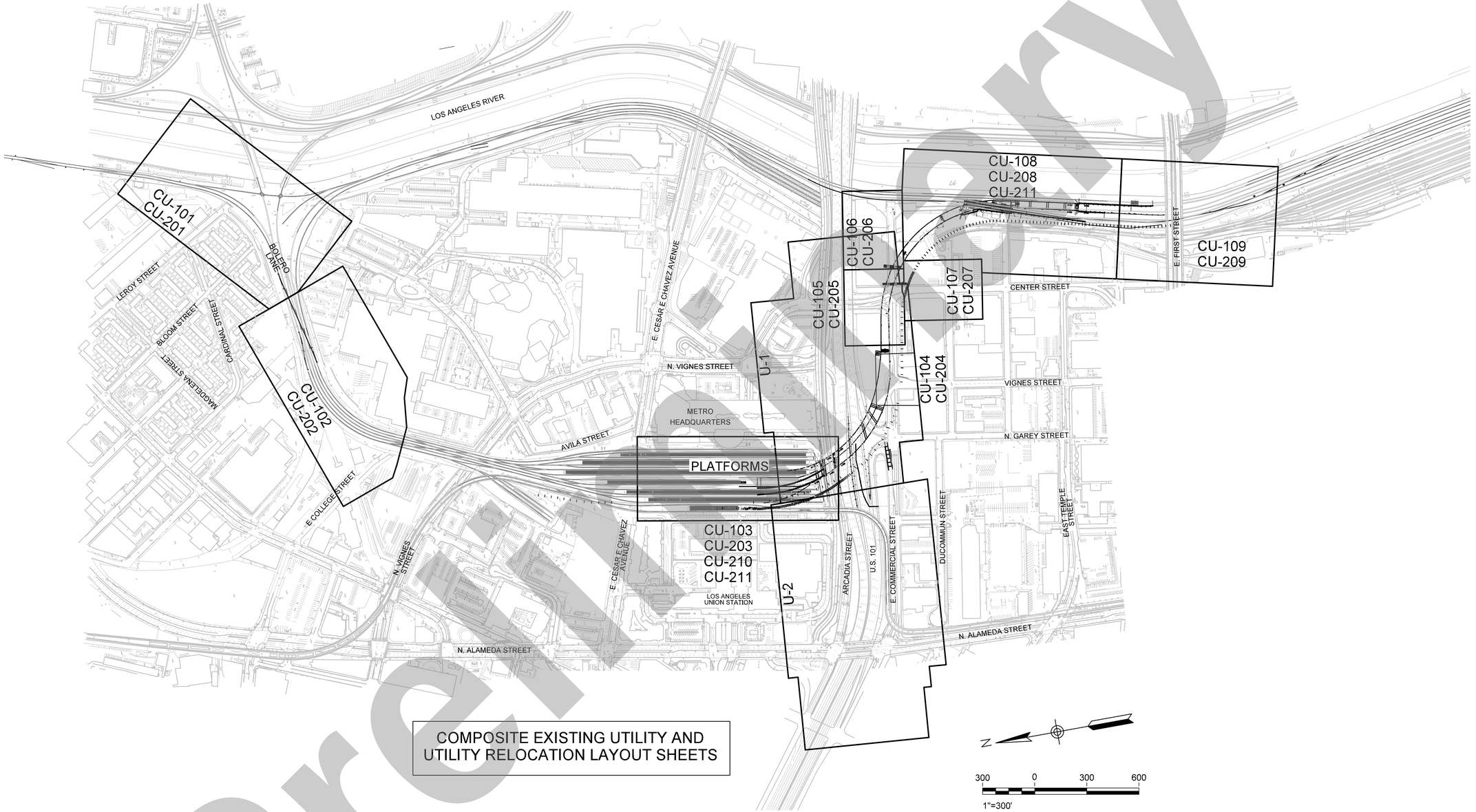

COMPOSITE EXISTING UTILITY AND UTILITY RELOCATION LAYOUT SHEETS

Preliminary

NOT FOR CONSTRUCTION

THE PREPARATION OF THIS DRAWING HAS BEEN FINANCED IN PART THROUGH A GRANT FROM THE U.S. DEPARTMENT OF TRANSPORTATION, FEDERAL TRANSIT ADMINISTRATION (FTA), UNDER THE FEDERAL TRANSIT ACT OF 1964, AS AMENDED, AND IN PART BY THE TAXES OF THE CITIZENS OF LOS ANGELES COUNTY AND OF THE STATE OF CALIFORNIA.

REV	DATE	BY	APP	REG NO	EXPIRES	SEAL HOLDER	DESCRIPTION

DESIGNED BY D. BULLOCK
DRAWN BY D. BULLOCK
CHECKED BY S. ZAKY
IN CHARGE T.KIM
DATE 2/21/2025

Metro
LOS ANGELES COUNTY METROPOLITAN TRANSPORTATION AUTHORITY

BA INC
TRUE ENGINEERING EXCELLENCE

HDR ENGINEERING
350 S. GRAND AVENUE
SUITE 2900
LOS ANGELES, CA 90071
(213) 239-5800

LINK UNION STATION PROJECT
EARLY WORKS PACKAGE 3 - PHASE A1
KEY MAP

CONTRACT NO PS2415-3172
DRAWING NO CU-100
REV 0
SCALE 1"=300'
SHEET NO 109

Plot Driver=$PLTDRV$$ Pentable=PlotStamp.tbl USER = DBullock 7:18:27 PM 2/18/2025 $FILE$

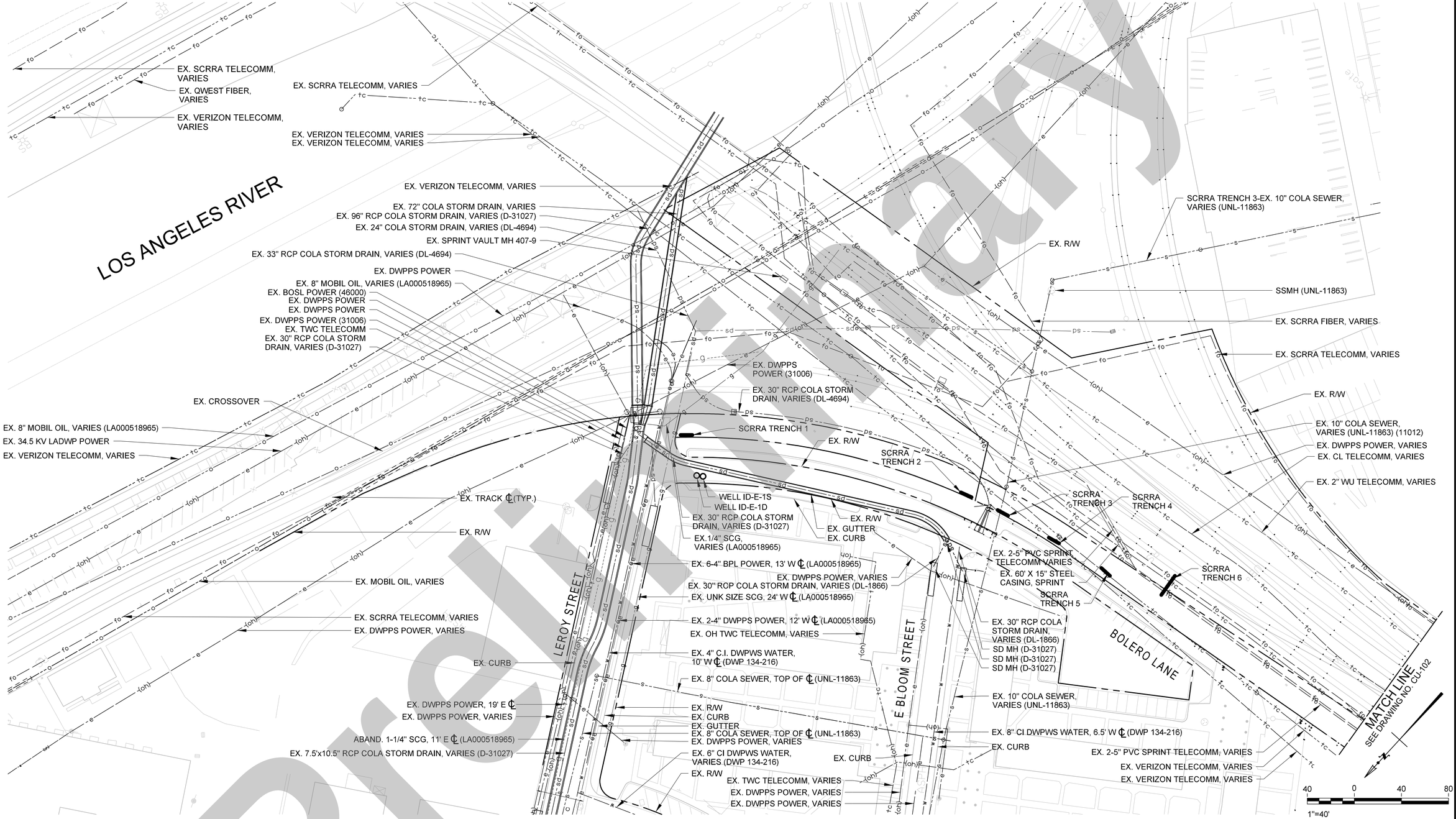

Preliminary

NOT FOR CONSTRUCTION

THE PREPARATION OF THIS DRAWING HAS BEEN FINANCED IN PART THROUGH A GRANT FROM THE U.S. DEPARTMENT OF TRANSPORTATION, FEDERAL TRANSIT ADMINISTRATION (FTA), UNDER THE FEDERAL TRANSIT ACT OF 1964, AS AMENDED, AND IN PART BY THE TAXES OF THE CITIZENS OF LOS ANGELES COUNTY AND OF THE STATE OF CALIFORNIA.

REV	DATE	BY	APP	REG NO	EXPIRES	SEAL HOLDER	DESCRIPTION

DESIGNED BY	D. BULLOCK
DRAWN BY	D. BULLOCK
CHECKED BY	S. ZAKY
IN CHARGE	T.KIM
DATE	2/21/2025

Metro

LOS ANGELES COUNTY
METROPOLITAN TRANSPORTATION AUTHORITY

EA INC (685-DBE/WBE) TRUE ENGINEERING EXCELLENCE
HDR ENGINEERING 350 S. GRAND AVENUE SUITE 2900 LOS ANGELES, CA 90071 (213) 239-5800

LINK UNION STATION PROJECT
EARLY WORKS PACKAGE 3 - PHASE A1
COMPOSITE UTILITY PLANS
SHEET 1 OF 11

CONTRACT NO	PS2415-3172
DRAWING NO	CU-101
REV	0
SCALE	1'=40"
SHEET NO	110

Plot Driver=$PLTDRV$$ | Pentable=PlotStamp.tbl | USER = DBullock | 1:07:49 PM | 2/18/2025 | $FILE$

Preliminary

RESIDENTIAL

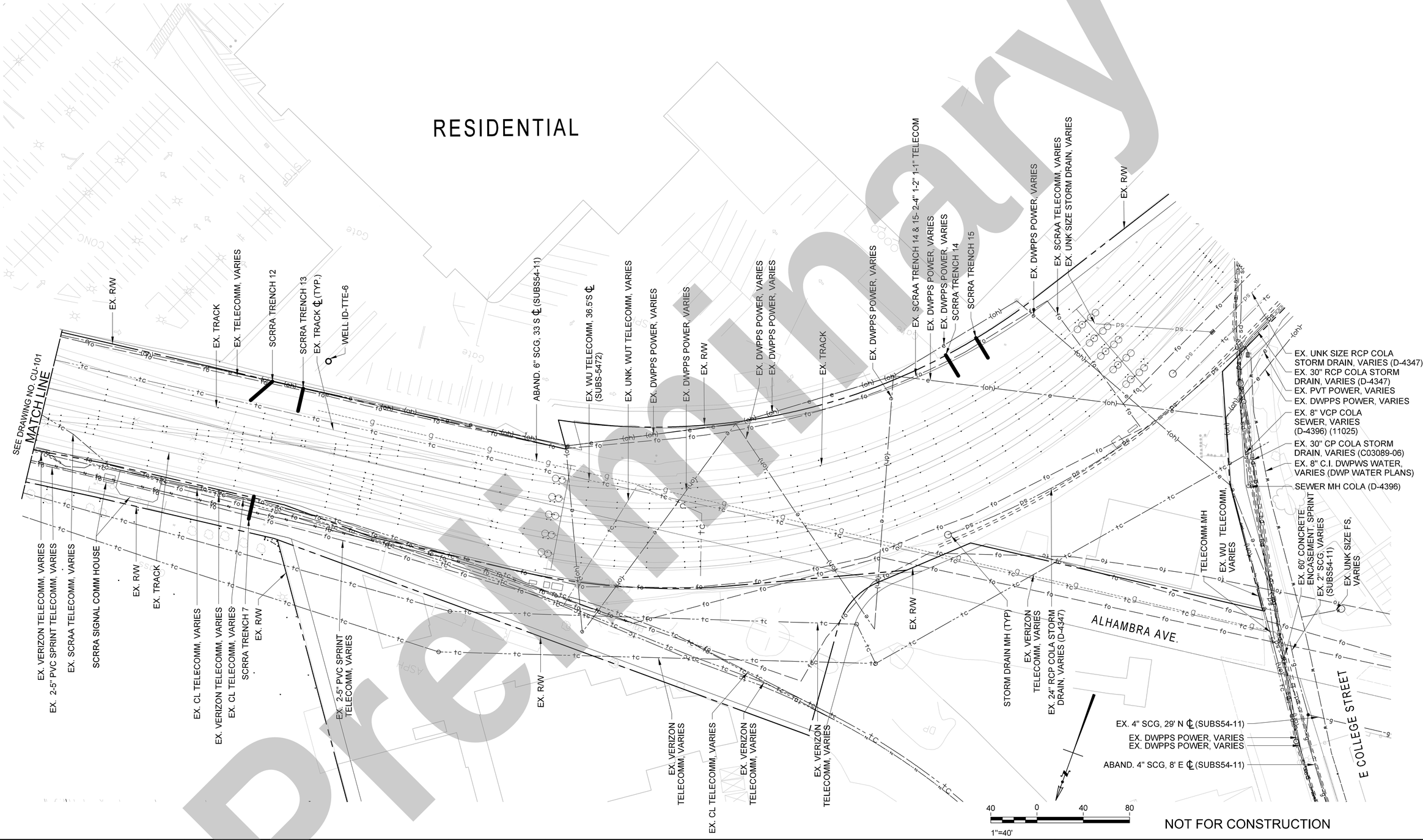

NOT FOR CONSTRUCTION

THE PREPARATION OF THIS DRAWING HAS BEEN FINANCED IN PART THROUGH A GRANT FROM THE U.S. DEPARTMENT OF TRANSPORTATION, FEDERAL TRANSIT ADMINISTRATION (FTA), UNDER THE FEDERAL TRANSIT ACT OF 1964, AS AMENDED, AND IN PART BY THE TAXES OF THE CITIZENS OF LOS ANGELES COUNTY AND OF THE STATE OF CALIFORNIA.

REV	DATE	BY	APP	REG NO	EXPIRES	SEAL HOLDER	DESCRIPTION

DESIGNED BY	D. BULLOCK
DRAWN BY	D. BULLOCK
CHECKED BY	S. ZAKY
IN CHARGE	T.KIM
DATE	2/21/2025

Metro
LOS ANGELES COUNTY
METROPOLITAN TRANSPORTATION AUTHORITY

BA INC (SBE/DBE/MBE) TRUE ENGINEERING EXCELLENCE
HDR ENGINEERING
350 S. GRAND AVENUE
SUITE 2550
LOS ANGELES, CA 90071
(213) 233-5800
HDR Van Nuys Office, 6633 Van Nuys Blvd., Van Nuys, CA 91401 (818)837-0610 OFFICE (818)837-0620 FAX

LINK UNION STATION PROJECT
EARLY WORKS PACKAGE 3 - PHASE A1
COMPOSITE UTILITY PLANS
SHEET 2 OF 11

CONTRACT NO	PS2415-3172
DRAWING NO	CU-102
REV	0
SCALE	1"=40'
SHEET NO	111

Plot Driver=$PLTDRV$$ Pentable=PlotStamp.tbl USER = DBullock 4:31:37 PM 2/18/2025 $FILE$

GENERAL NOTES:

1. SEE DRAWING CU-001 FOR NOTES & CU-100 FOR KEY MAP.
2. FOR EXISTING UTILITIES OFFSITE, SEE OFFSITE UTILITIES.
3. ABANDONED UTILITIES ARE SHOWN AS SCREENED LINES.
4. SEE CALTRANS PLAN SHEETS U-1 AND U-2 FOR UTILITIES WITHIN THE US-101 R/W.
5. EXISTING GAS LINE WAS NOT EXPOSED AS PART OF THE SCRAA TRENCH 8 INVESTIGATION, THE DESIGN TEAM DOES NOT BELIEVE THE GAS LINE EXISTS BASED ON SUBSEQUENT RESEARCH AND COORDINATION

*EXIST WATER SIZE TO BE VERIFIED PRIOR TO CONSTRUCTION

LEGEND

(####) UTILITY ID. SEE GENERAL NOTE 1 HEREON.

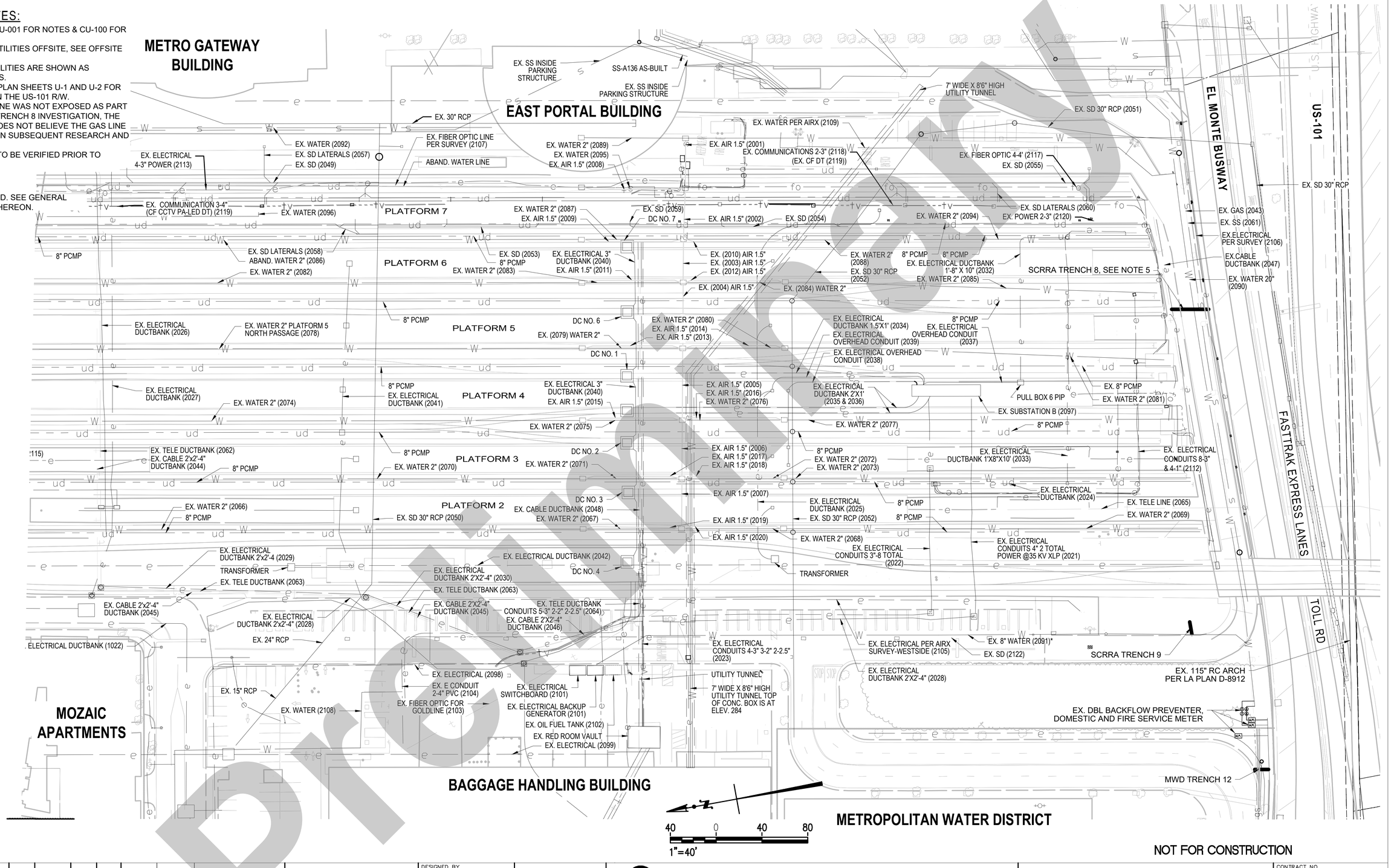

NOT FOR CONSTRUCTION

Preliminary

THE PREPARATION OF THIS DRAWING HAS BEEN FINANCED IN PART THROUGH A GRANT FROM THE U.S. DEPARTMENT OF TRANSPORTATION, FEDERAL TRANSIT ADMINISTRATION (FTA), UNDER THE FEDERAL TRANSIT ACT OF 1964, AS AMENDED, AND IN PART BY THE TAXES OF THE CITIZENS OF LOS ANGELES COUNTY AND OF THE STATE OF CALIFORNIA.

REV	DATE	BY	APP	REG NO	EXPIRES	SEAL HOLDER	DESCRIPTION

DESIGNED BY D. BULLOCK
DRAWN BY D. BULLOCK
CHECKED BY S. ZAKY
IN CHARGE T. KIM
DATE 2/21/2024

Metro
LOS ANGELES COUNTY
METROPOLITAN TRANSPORTATION AUTHORITY

BA INC (DBE/SBE/MBE) BASIC ENGINEERING / CIVIL LLC
HDR ENGINEERING
350 S. GRAND AVENUE SUITE 2900 LOS ANGELES, CA 90071 (213) 239-5800

LINK UNION STATION PROJECT
EARLY WORKS PACKAGE - PHASE A1
COMPOSITE UTILITY PLANS
SHEET 3 OF 11

CONTRACT NO PS2415-3172
DRAWING NO CU-103
REV 0
SCALE 1" = 40'
SHEET NO 112

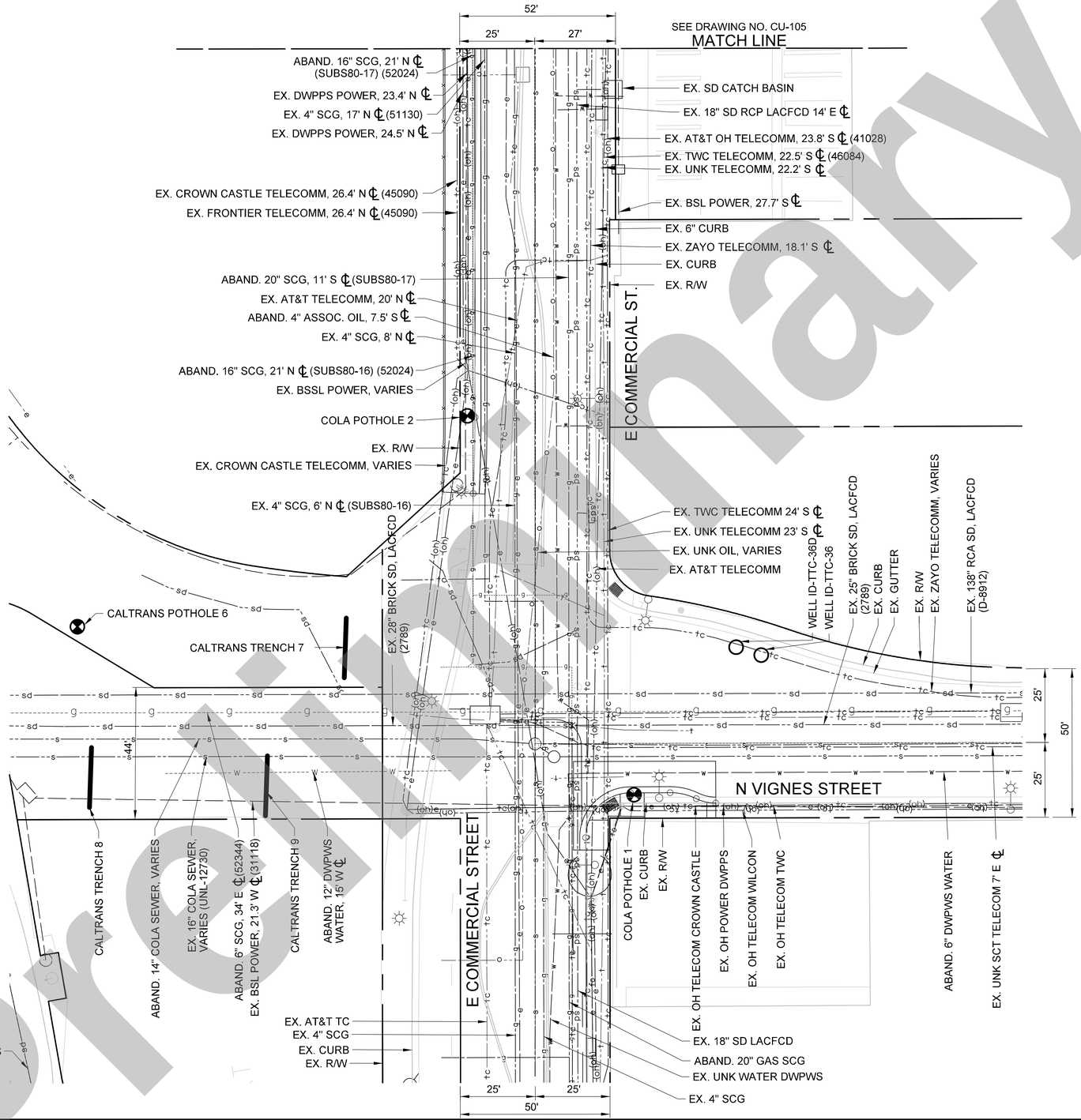

NOT FOR CONSTRUCTION

Preliminary

THE PREPARATION OF THIS DRAWING HAS BEEN FINANCED IN PART THROUGH A GRANT FROM THE U.S. DEPARTMENT OF TRANSPORTATION, FEDERAL TRANSIT ADMINISTRATION (FTA), UNDER THE FEDERAL TRANSIT ACT OF 1964, AS AMENDED, AND IN PART BY THE TAXES OF THE CITIZENS OF LOS ANGELES COUNTY AND OF THE STATE OF CALIFORNIA.

REV	DATE	BY	APP	REG NO	EXPIRES	SEAL HOLDER	DESCRIPTION

DESIGNED BY D. BULLOCK
DRAWN BY D. BULLOCK
CHECKED BY S. ZAKY
IN CHARGE T.KIM
DATE 2/21/2025

Metro
LOS ANGELES COUNTY METROPOLITAN TRANSPORTATION AUTHORITY

BA INC (1988-2018) TRUE ENGINEERING EXCELLENCE
700 N. Alameda Street, 3rd Floor | Los Angeles, CA 90012 | (213) 617-0414 | FAX: (213) 617-7520

HDR ENGINEERING
350 S. GRAND AVENUE SUITE 2000 LOS ANGELES, CA 90071 (213) 239-5800

LINK UNION STATION PROJECT
EARLY WORKS PACKAGE 3 - PHASE A1
COMPOSITE UTILITY PLANS
SHEET 4 OF 11

CONTRACT NO PS2415-3172
DRAWING NO CU-104 REV 0
SCALE 1"=40'
SHEET NO 113

Plot Driver=$PLTDRVS$ Pentable=PlotStamp.tbl USER = DBullock 5:21:21 PM 2/19/2025 $FILE$

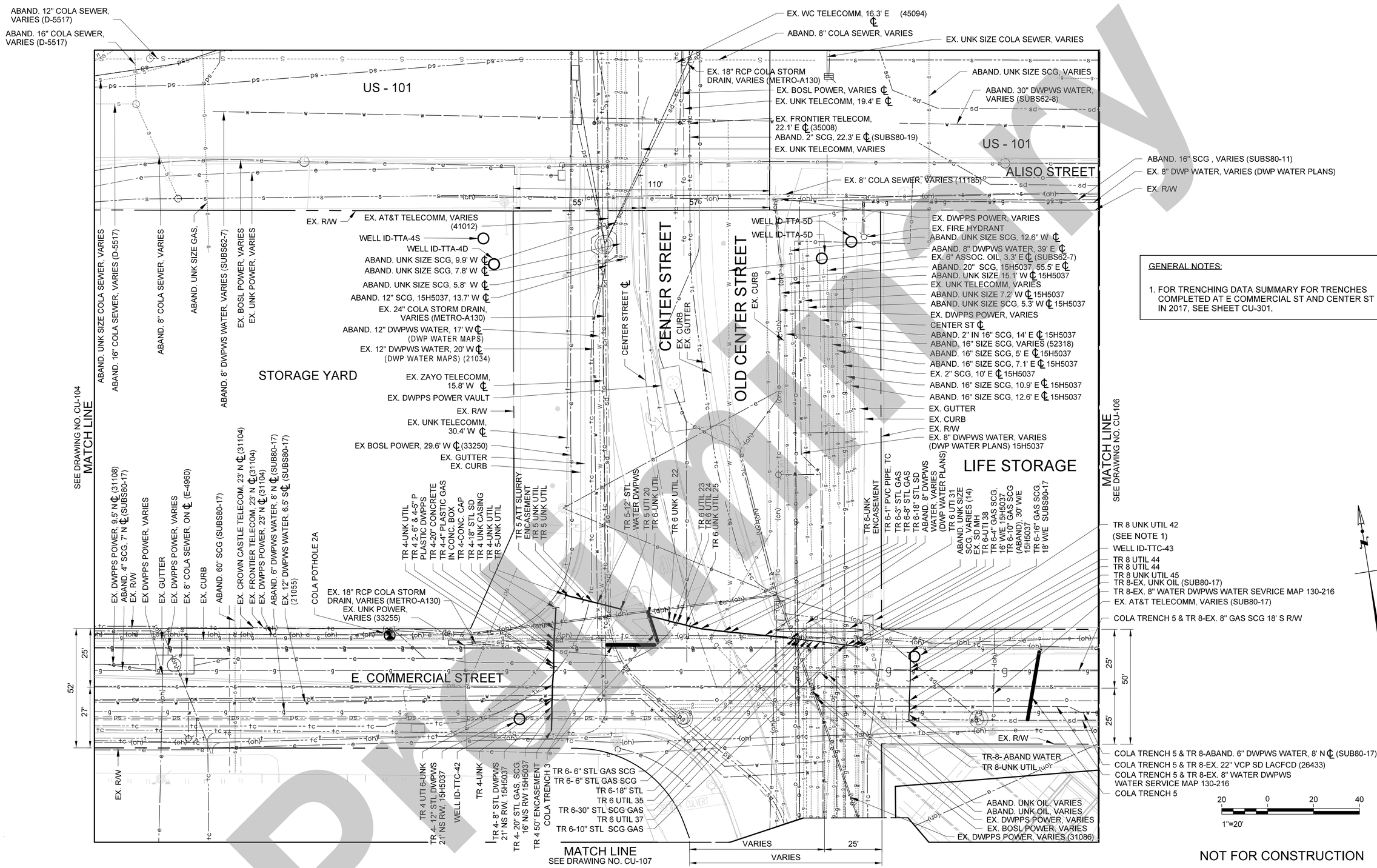

GENERAL NOTES:

1. FOR TRENCHING DATA SUMMARY FOR TRENCHES COMPLETED AT E COMMERCIAL ST AND CENTER ST IN 2017, SEE SHEET CU-301.

NOT FOR CONSTRUCTION

Preliminary

THE PREPARATION OF THIS DRAWING HAS BEEN FINANCED IN PART THROUGH A GRANT FROM THE U.S. DEPARTMENT OF TRANSPORTATION, FEDERAL TRANSIT ADMINISTRATION (FTA), UNDER THE FEDERAL TRANSIT ACT OF 1964, AS AMENDED, AND IN PART BY THE TAXES OF THE CITIZENS OF LOS ANGELES COUNTY AND OF THE STATE OF CALIFORNIA.

REV	DATE	BY	APP	REG NO	EXPIRES	SEAL HOLDER	DESCRIPTION

DESIGNED BY	D. BULLOCK
DRAWN BY	D. BULLOCK
CHECKED BY	S. ZAKY
IN CHARGE	T.KIM
DATE	2/21/2025

LOS ANGELES COUNTY
METROPOLITAN TRANSPORTATION AUTHORITY

BA INC (SBE/DBE/MBE) TRUE ENGINEERING EXCELLENCE
750 W Bob Moore Blvd, Ste 900 Rancho Cucamonga, CA 91730
TEL (909) 581-2000 FAX (909) 581-2001

HDR ENGINEERING
350 S. GRAND AVENUE
SUITE 2500
LOS ANGELES, CA 90071
(213) 239-5800

LINK UNION STATION PROJECT
EARLY WORKS PACKAGE 3 - PHASE A1
COMPOSITE UTILITY PLANS
SHEET 5 OF 11

CONTRACT NO	PS2415-3172
DRAWING NO	CU-105
REV	0
SCALE	1"=40'
SHEET NO	114

Plot Driver=$PLTDRVS$ Pentable=PlotStamp.tbl USER = DBullock 5:38:38 PM 2/18/2025 $FILE$

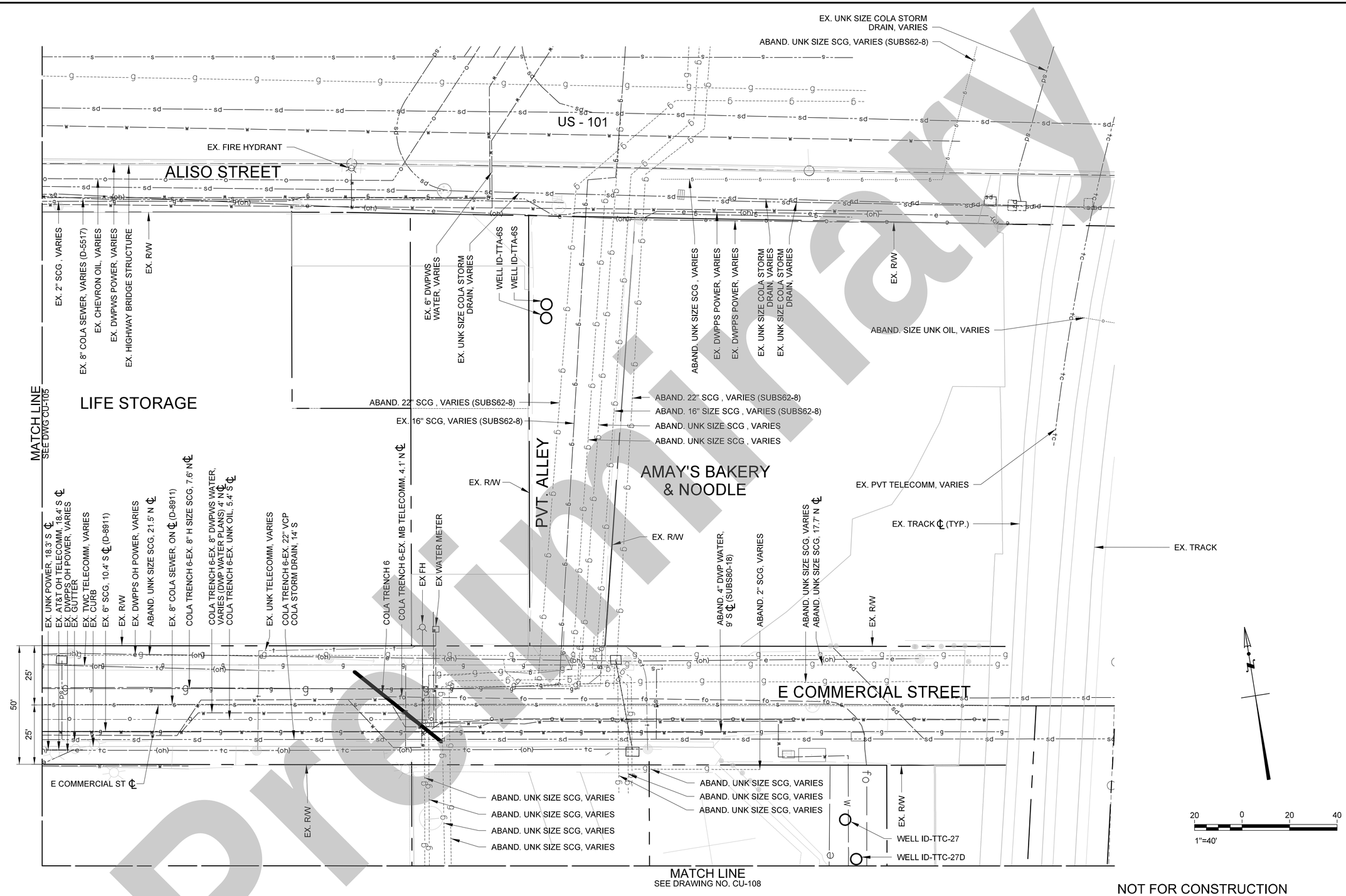

NOT FOR CONSTRUCTION

Preliminary

THE PREPARATION OF THIS DRAWING HAS BEEN FINANCED IN PART THROUGH A GRANT FROM THE U.S. DEPARTMENT OF TRANSPORTATION, FEDERAL TRANSIT ADMINISTRATION (FTA), UNDER THE FEDERAL TRANSIT ACT OF 1964, AS AMENDED, AND IN PART BY THE TAXES OF THE CITIZENS OF LOS ANGELES COUNTY AND OF THE STATE OF CALIFORNIA.

REV	DATE	BY	APP	REG NO	EXPIRES	SEAL HOLDER	DESCRIPTION

DESIGNED BY	D. BULLOCK
DRAWN BY	D. BULLOCK
CHECKED BY	S. ZAKY
IN CHARGE	T.KIM
DATE	2/21/2025

Metro

LOS ANGELES COUNTY
METROPOLITAN TRANSPORTATION AUTHORITY

BA INC (SBE/DBE/MBE) TRUE ENGINEERING EXCELLENCE
1754 Front Street Suite 100 | 1633 West Las Angeles, CA 90063 | 213.613.0 | HR OFFICE: 213.613.7100 FAX

HDR ENGINEERING
350 S. GRAND AVENUE
SUITE 2600
LOS ANGELES, CA 90071
(213) 239-5800

LINK UNION STATION PROJECT
EARLY WORKS PACKAGE 3 - PHASE A1
COMPOSITE UTILITY PLANS
SHEET 6 OF 11

CONTRACT NO	PS2415-3172
DRAWING NO	CU-106
REV	0
SCALE	1"=40'
SHEET NO	115

Plot Driver=$PLTDRV$ Pentable=PlotStamp.tbl USER = DBullock 5:35:39 PM 2/19/2025 $FILE$

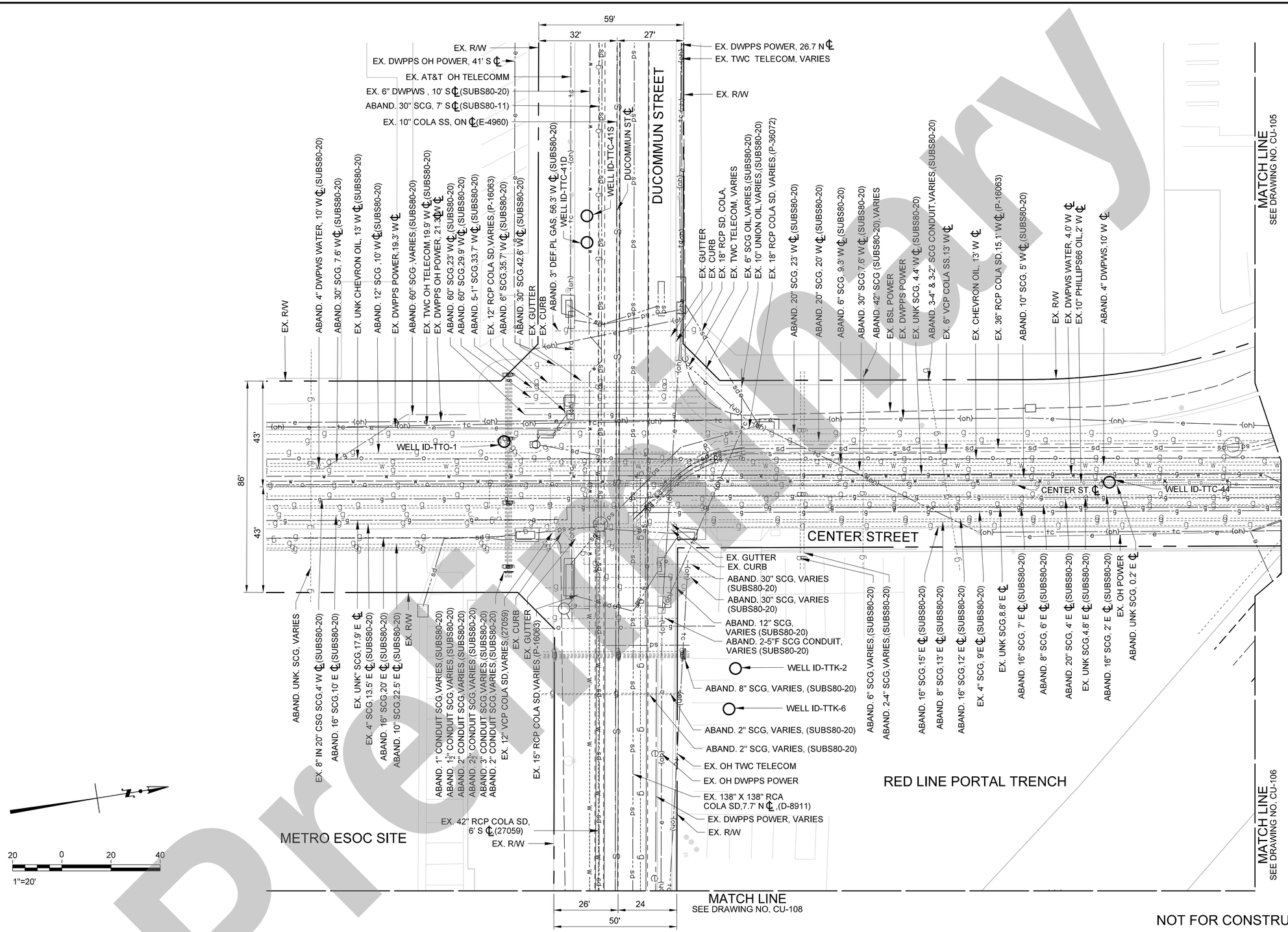

NOT FOR CONSTRUCTION

Preliminary

THE PREPARATION OF THIS DRAWING HAS BEEN FINANCED IN PART THROUGH A GRANT FROM THE U.S. DEPARTMENT OF TRANSPORTATION, FEDERAL TRANSIT ADMINISTRATION (FTA), UNDER THE FEDERAL TRANSIT ACT OF 1964, AS AMENDED, AND IN PART BY THE TAXES OF THE CITIZENS OF LOS ANGELES COUNTY AND OF THE STATE OF CALIFORNIA.

REV	DATE	BY	APP	REG NO	EXPIRES	SEAL HOLDER	DESCRIPTION

DESIGNED BY	D. BULLOCK
DRAWN BY	D. BULLOCK
CHECKED BY	S. ZAKY
IN CHARGE	T.KIM
DATE	2/21/2025

Metro
LOS ANGELES COUNTY
METROPOLITAN TRANSPORTATION AUTHORITY

BA INC (SBE/DBE/MBE)
TRUE ENGINEERING EXCELLENCE
700 N San Vicente Blvd, West Hollywood, Los Angeles, CA 90069
213.683.3130 | HQ OFFICE: 310.693.7300 FAX

HDR
HDR ENGINEERING
350 S. GRAND AVENUE
SUITE 2550
LOS ANGELES, CA 90071
(213) 239-0800

LINK UNION STATION PROJECT
EARLY WORKS PACKAGE 3 - PHASE A1
COMPOSITE UTILITY PLANS
SHEET 7 OF 11

CONTRACT NO	PS2415-3172
DRAWING NO	CU-107
REV	0
SCALE	1"=20'
SHEET NO	116

Plot Driver=$PLTDRV$$ Pentable=PlotStamp.tbl USER = DBullock 5:44:29 PM 2/18/2025 $FILE$

LOS ANGELES RIVER

EX. R/W
ABAND. 16" SCG,VARIES
EX. MB TELECOMM, VARIES
EX. 8" PVT FP, VARIES
EX. LIGHTING DUCT METRO, VARIES,(LS-73)
ABAND. EXXON OIL, VARIES
METRO DIV 20 POTHOLE 1
EX. 8" PVC FW
EX. MB TELECOMM
METRO DIV 20 TRENCH 2
EX. 8" PVC FW
EX. 138" X 138" RCA,COLA STORM DRAIN,7' N ℄ (D-8911)
EX. 42" RCP COLA STORM DRAIN,7' S ℄ (27059)
ABAND. UNK, LADWP, VARIES
EX. PVT STORM DRAIN OUTFALL
EX. UNK SCG,13.7' S ℄ (XXX)
BNSF TRENCH 1
EX. 21" RCP COLA, VARIES,(METRO A130)
EX. VERIZON TELECOMM, VARIES
EX. 15" RCP SD COLA, VARIES,(METRO A130)
EX. 18" RCP STORM DRAIN
EX. 18" RCP COLA STORM DRAIN, VARIES,(METRO A130)
EX. 18" RCP STORM DRAIN
EX. C/P DUCTBANK
EX. VERIZON TELECOMM
EX. DUCT BANK
EX. 8" PVC FW
METRO DIV 20 TRENCH 5
EX. PVT 6" FP, VARIES
EX. PVT 6" FP, VARIES
EX. MB TELECOMM, VARIES
BNSF TRENCH 2
EX. AMTRACK ℄
EX. MAIN TRACK ℄
METRO DIV 20 MH-1
ABAND. 8" PVT WATER
METRO DIV 20 TRENCH 7
EX. DWPPS POWER
EX. VERIZON TELECOMM
BNSF TRENCH 3
ABAND. EXXON MOBIL OIL
ABAND. 12" SCG
BNSF POTHOLE 5
BNSF POTHOLE 4A
BNSF POTHOLE 4B
BNSF POTHOLE 6
BNSF POTHOLE 7
DIV 20 BOUNDARY SEE NOTE 1
EX. TRACK ℄(TYP)
BNSF POTHOLE 8
EX. LEVEL 3 TELECOMM LAXC017B003AAR2

METRO DIV 20 TRENCH 4
METRO DIV 20 POTHOLE 3-3
METRO DIV 20 POTHOLE 3-2
METRO DIV 20 POTHOLE 3-1
ABAND. UNK SCG, VARIES
METRO DIV 20 POTHOLE 3-1
BNSF POTHOLE 9

SEE DRAWING NO. CU-106
MATCH LINE

EX. OH DWPPS POWER, 16.8' N ℄
ABAND. COLA 8" VCP SS, 0.6' S ℄ (FB530-55)
ABAND. UNK SCG, 16.7' N ℄

EX. 20" SCG,VARIES,(1.54)
EX. RED LINE SIGNAL BUNGALOW
DUCOMMUN STREET
2 - TTK-6
50'
EX. R/W
EX. BOSL POWER
EX. CURB
ABAND. 4" DWPWS WATER
ABAND. UNK SIZE DWP WATER
EX. 42" COLA STORM DRAIN
EX. 8" COLA STORM DRAIN
DUCOMMUN ST ℄

MATCH LINE
SEE DRAWING NO. CU-107

ABAND. UNK SIZE SCG
ABAND. UNK SIZE SCG
ABAND. UNK SIZE SCG
EX. MB TELECOMM, VARIES
JACKSON STREET
ABAND. 16" SCG
ABAND. 16" SCG
ABAND. 16" UNK OIL
ABAND. 24" SCG
EX. BOSL POWER
ABAND. 16" SCG
ABAND. SIZE SCG
ELLIDO-400
EX. 8" COLA SEWER
JACKSON ST ℄
EX. DWPPS POWER
EX. UNK SIZE SCG
ABAND. UNK SIZE SCG
EX. UNK SIZE SCG
EX. 4" DWPWS WATER
EX. 30" SCG
EX. CURB
EX. TWC TELECOMM
ABAND. UNK SIZE SCG
ABAND. 3" SIZE SCG
ABAND. UNK SIZE DWPWS WATER

EX. 20" SCG
EX. MB TELECOMM
EX. MB TELECOMM
EX. METRO POWER
EX. MB TELECOMM
EX. VERIZON TELECOMM
EX. UNK SIZE SCG
EX. 8" PVT WATER

EX. 18" STORM DRAIN
COLA

ABAND. 4" SCG
E TEMPLE STREET
ABAND. 4" SHELL OIL
EX. 8" SCG
EX. DWPPS POWER

METRO DIVISION 20 SITE

ABAND. 6" PVT WATER
EX. 3" AMOL. OIL
EX. TWC TELECOMM
ABAND. 8" COLA SEWER

MATCH LINE
SEE DRAWING NO. CU-109

40 0 40 80
1"=40'

NOT FOR CONSTRUCTION

Preliminary

THE PREPARATION OF THIS DRAWING HAS BEEN FINANCED IN PART THROUGH A GRANT FROM THE U.S. DEPARTMENT OF TRANSPORTATION, FEDERAL TRANSIT ADMINISTRATION (FTA), UNDER THE FEDERAL TRANSIT ACT OF 1964, AS AMENDED, AND IN PART BY THE TAXES OF THE CITIZENS OF LOS ANGELES COUNTY AND OF THE STATE OF CALIFORNIA.

REV	DATE	BY	APP	REG NO	EXPIRES	SEAL HOLDER	DESCRIPTION

DESIGNED BY D. BULLOCK
DRAWN BY D. BULLOCK
CHECKED BY S. ZAKY
IN CHARGE T.KIM
DATE 2/21/2025

Metro
LOS ANGELES COUNTY
METROPOLITAN TRANSPORTATION AUTHORITY

BA INC (SBE/DBE/MBE) TRUE ENGINEERING EXCELLENCE
HDR ENGINEERING 350 S. GRAND AVENUE SUITE 1400 LOS ANGELES, CA 90071 (213) 239-5800

LINK UNION STATION PROJECT
EARLY WORKS PACKAGE 3 - PHASE A1
COMPOSITE UTILITY PLANS
SHEET 8 OF 11

CONTRACT NO PS2415-3172
DRAWING NO CU-108
REV 0
SCALE 1"=40'
SHEET NO 117

Plot Driver=$PLTDRV$$ Pentable=PlotStamp.tbl USER = maguilar 2/19/2025 4:25:56 PM $FILE$

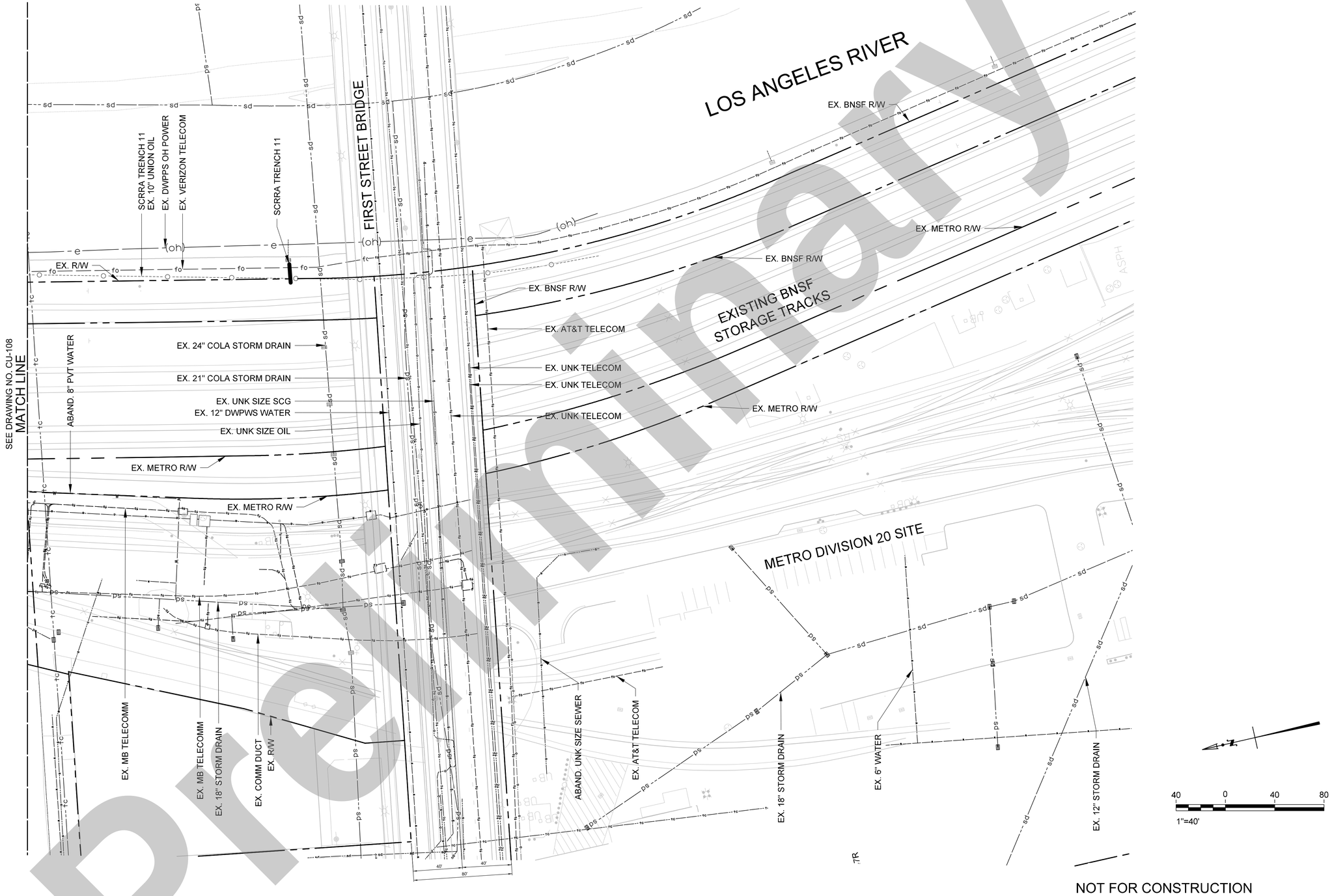

Preliminary

NOT FOR CONSTRUCTION

THE PREPARATION OF THIS DRAWING HAS BEEN FINANCED IN PART THROUGH A GRANT FROM THE U.S. DEPARTMENT OF TRANSPORTATION, FEDERAL TRANSIT ADMINISTRATION (FTA), UNDER THE FEDERAL TRANSIT ACT OF 1964, AS AMENDED, AND IN PART BY THE TAXES OF THE CITIZENS OF LOS ANGELES COUNTY AND OF THE STATE OF CALIFORNIA.

REV	DATE	BY	APP	REG NO	EXPIRES	SEAL HOLDER	DESCRIPTION

DESIGNED BY D. BULLOCK
DRAWN BY D. BULLOCK
CHECKED BY S. ZAKY
IN CHARGE T.KIM
DATE 2/21/2025

Metro
LOS ANGELES COUNTY
METROPOLITAN TRANSPORTATION AUTHORITY

BA INC (SBE/DBE/MBE)
TRUE ENGINEERING EXCELLENCE
760 N. East Mission Blvd., 3rd Floor | Los Angeles, CA 90033
213.627.3134 | OFFICE | 213.627.7320 | FAX

HDR ENGINEERING
350 S. GRAND AVENUE
SUITE 2200
LOS ANGELES, CA 90071
(213) 239-0800

LINK UNION STATION PROJECT
EARLY WORKS PACKAGE 3 - PHASE A1
COMPOSITE UTILITY PLANS
SHEET 9 OF 11

CONTRACT NO PS2415-3172
DRAWING NO CU-109
REV 0
SCALE 1"=40'
SHEET NO 118

Plot Driver=$PLTDRVS$ Pentable=PlotStamp.tbl USER = DBullock 5:48:47 PM 2/18/2025 $FILE$

Dist	COUNTY	ROUTE	POST MILES TOTAL PROJECT	SHEET No.	TOTAL SHEETS
07	LA	10S, 101	17.0/17.3 0.4/0.7	U-1	2

NOT FOR CONSTRUCTION
FEBRUARY 2025

BA, INC
750 N SAN VICENTE
BLVD #800
LOS ANGELES, CA 90069

LA METRO
ONE GATEWAY PLAZA
LOS ANGELES, CA 90012

NOT FOR CONSTRUCTION
FEBRUARY 2025

65% SUBMITTAL

STATE OF CALIFORNIA - DEPARTMENT OF TRANSPORTATION

Caltrans

ABBREVIATIONS:

Pvt	PRIVATE
Unk	UKNOWN
Abn	ABANDONED
Telecom	TELECOMMUNICATION

LOS ANGELES

UTILITY OWNERSHIP:

ELECTRICAL- CITY OF LOS ANGELES BUREAU OF STREET LIGHTING (BOSL)
CITY OF LOS ANGELES DEPARTMENT OF WATER & POWER (LADWP)
FIBER OPTIC- CROWN CASTLE (CC)
GAS - SOUTHERN CALIFORNIA GAS COMPANY (SCG)
OIL - CHEVRON CORPORATION (CHEVRON)
PLAINS ALL AMERICAN PIPELINE (PLAINS)
SEWER - CITY OF LOS ANGELES BUREAU OF SANITATION (LABOS)
TELECOM - TIME WARNER CABLE (TWC)
AT&T INC (AT&T)
WATER - LOS ANGELES DEPARTMENT OF WATER & POWER (LADWP)
STORM DRAIN-CITY OF LOS ANGELES BUREAU OF ENGINEERING (LABOE)

LAUS VIADUCT
OVER US-101 SEE
STRUCTURE PLANS
COMMERCIAL St SB ON-RAMP

VIGNES St NB OFF-RAMP

VIGNES St ON-RAMP

COMMERCIAL St SB OFF-RAMP

"A1" LINE
"A2" LINE
"AL3" LINE
"AL4" LINE
"B1" LINE

SB US 101
NB US 101
WB I-10S
EB I-10S
U.S. HIGHWAY 101

UTILITY PLAN

SCALE: 1" = 50'

SHEET NO 119

U-1

LAST REVISION DATE PLOTTED => $DATE
00-00-00 TIME PLOTTED => $TIME

BORDER LAST REVISED 1/4/2023 | USERNAME => $USER | DGN FILE => CALTRANS Utility Plan 1 | RELATIVE BORDER SCALE IS IN INCHES 0 1 2 3 | UNIT XXXX | PROJECT NUMBER & PHASE 07150001191

Dist	COUNTY	ROUTE	POST MILES TOTAL PROJECT	SHEET No.	TOTAL SHEETS
07	LA	10S, 101	17.0/17.3 0.4/0.7	U-2	2

NOT FOR CONSTRUCTION
FEBRUARY 2025

BA, INC
750 N SAN VICENTE
BLVD #800
LOS ANGELES, CA 90069

LA METRO
ONE GATEWAY PLAZA
LOS ANGELES, CA 90012

NOT FOR CONSTRUCTION
FEBRUARY 2025

65% SUBMITTAL

STATE OF CALIFORNIA - DEPARTMENT OF TRANSPORTATION
Caltrans

LADWP WATER
LADWP POWER OH
TWC TELECOM OH
AT&T TELECOM
TWC TELECOM OH
LABOS SEWER
SCG GAS
LADWP Abn WATER
Abn GAS
UNK TELEPHONE
LABOE STORM DRAIN
R/W
LOS ANGELES
COMMERCIAL STREET
AT&T TELECOM
GOLD LINE
COMMERCIAL St
SB OFF-RAMP
"AL3" LINE
MATCH LINE "A1" +50 (U-1)
SB US 101
NB US 101
"A2" LINE
"A1" LINE
"AL1" LINE
"B1" LINE
U.S. HIGHWAY 101
WB I-10S
EB I-10S
R/W Ease
PVT STORM DRAIN
IMPACTED WATER
LABOE STORM DRAIN
ALAMEDA St NB OFF-RAMP
CALTRANS STORM DRAIN
LADWP WATER
AT&T TELECOM
BOSL POWER
LABOE STORM DRAIN
UNION STATION
LABOS SEWER
PLAINS FIBER
LABOE STORM DRAIN
PLAINS OIL
LABOS SEWER
LADWP WATER
LABOE STORM DRAIN
ALISO STREET
ALAMEDA STREET
ARCADIA STREET
BOSL POWER
LABOE STORM DRAIN
SCG GAS
LADWP POWER
LABOS SEWER
AT&T TELECOM
LADWP POWER

Preliminary

UTILITY PLAN

SCALE: 1" = 50'

SHEET NO 120

U-2

APPROVED FOR UTILITY WORK ONLY

LAST REVISION | DATE PLOTTED => $DATE
00-00-00 | TIME PLOTTED => $TIME

BORDER LAST REVISED 1/4/2023 | USERNAME => $USER | DGN FILE => $REQUEST | RELATIVE BORDER SCALE IS IN INCHES 0 1 2 3 | UNIT XXXX | PROJECT NUMBER & PHASE 07150001191

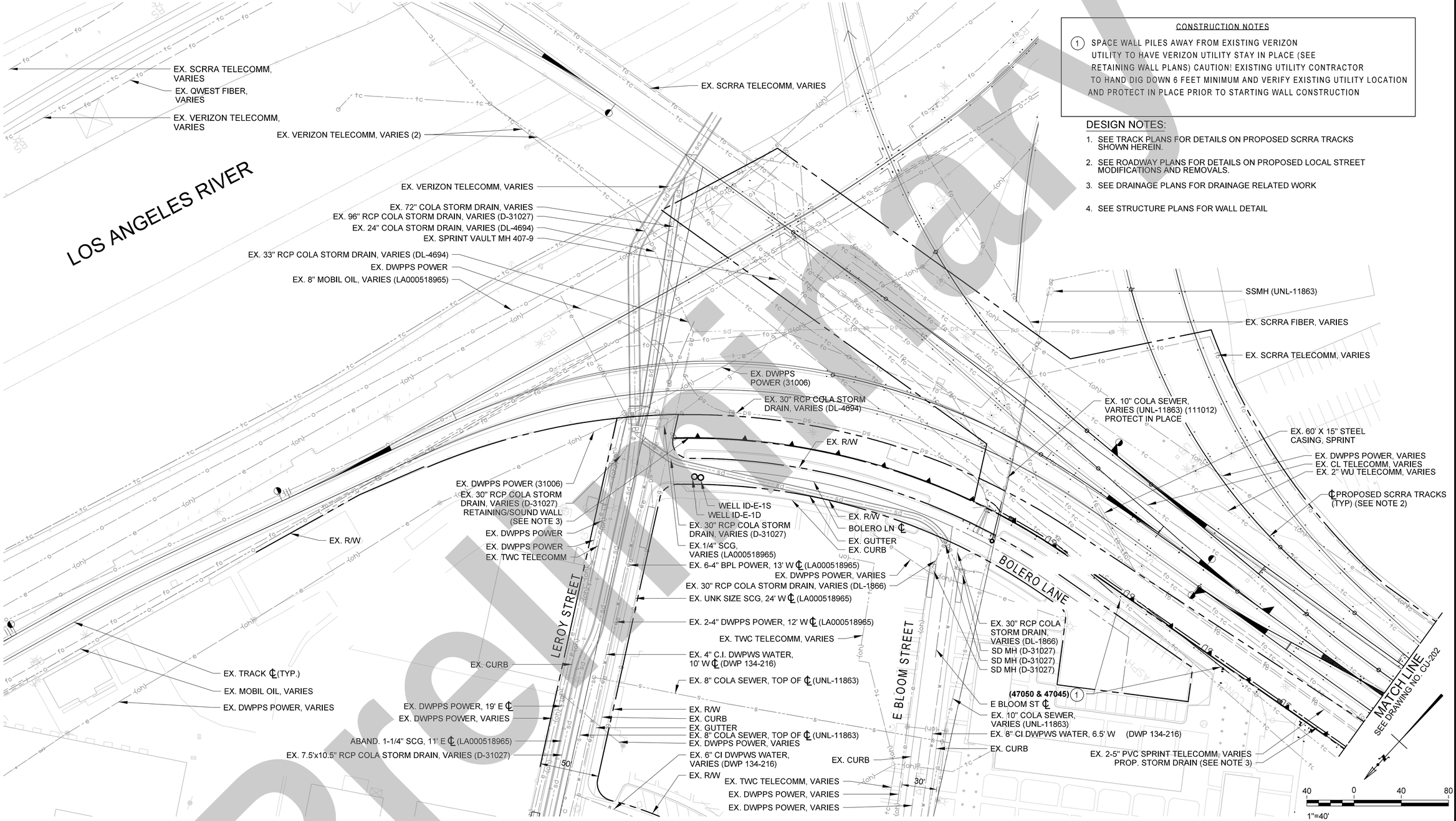

CONSTRUCTION NOTES

1. SPACE WALL PILES AWAY FROM EXISTING VERIZON UTILITY TO HAVE VERIZON UTILITY STAY IN PLACE (SEE RETAINING WALL PLANS) CAUTION! EXISTING UTILITY CONTRACTOR TO HAND DIG DOWN 6 FEET MINIMUM AND VERIFY EXISTING UTILITY LOCATION AND PROTECT IN PLACE PRIOR TO STARTING WALL CONSTRUCTION

DESIGN NOTES:

1. SEE TRACK PLANS FOR DETAILS ON PROPOSED SCRRA TRACKS SHOWN HEREIN.
2. SEE ROADWAY PLANS FOR DETAILS ON PROPOSED LOCAL STREET MODIFICATIONS AND REMOVALS.
3. SEE DRAINAGE PLANS FOR DRAINAGE RELATED WORK
4. SEE STRUCTURE PLANS FOR WALL DETAIL

Preliminary

NOT FOR CONSTRUCTION

THE PREPARATION OF THIS DRAWING HAS BEEN FINANCED IN PART THROUGH A GRANT FROM THE U.S. DEPARTMENT OF TRANSPORTATION, FEDERAL TRANSIT ADMINISTRATION (FTA), UNDER THE FEDERAL TRANSIT ACT OF 1964, AS AMENDED, AND IN PART BY THE TAXES OF THE CITIZENS OF LOS ANGELES COUNTY AND OF THE STATE OF CALIFORNIA.

REV	DATE	BY	APP	REG NO	EXPIRES	SEAL HOLDER	DESCRIPTION

DESIGNED BY	D. BULLOCK
DRAWN BY	D. BULLOCK
CHECKED BY	S. ZAKY
IN CHARGE	T.KIM
DATE	2/21/2025

Metro
LOS ANGELES COUNTY METROPOLITAN TRANSPORTATION AUTHORITY
BA INC (1000039696) TRUE ENGINEERING EXCELLENCE 700 N. San Vicente Blvd., West Hollywood, CA 90069 (310)657-9818 OFFICE (310)657-5620 FAX
HDR ENGINEERING 350 S. GRAND AVENUE SUITE 2900 LOS ANGELES, CA 90071 (213) 239-5800

LINK UNION STATION PROJECT
EARLY WORKS PACKAGE 3 - PHASE A1
UTILITY RELOCATION PLANS
SHEET 1 OF 13

CONTRACT NO	PS2415-3172
DRAWING NO	CU-201
REV	0
SCALE	1"=40'
SHEET NO	121

Plot Driver=$PLTDRVS$ Pentable=PlotStamp.tbl USER = DBullock 7:07:29 PM 2/19/2025 $FILE$

NO RELOCATIONS ON THIS SHEET

DESIGN NOTES

1. SEE TRACK PLANS FOR DETAILS ON PROPOSED SCRRA TRACKS SHOWN HEREIN.
2. SEE ROADWAY PLANS FOR DETAILS ON PROPOSED LOCAL STREET MODIFICATIONS AND REMOVALS.
3. SEE DRAINAGE PLANS FOR DRAINAGE RELATED WORK

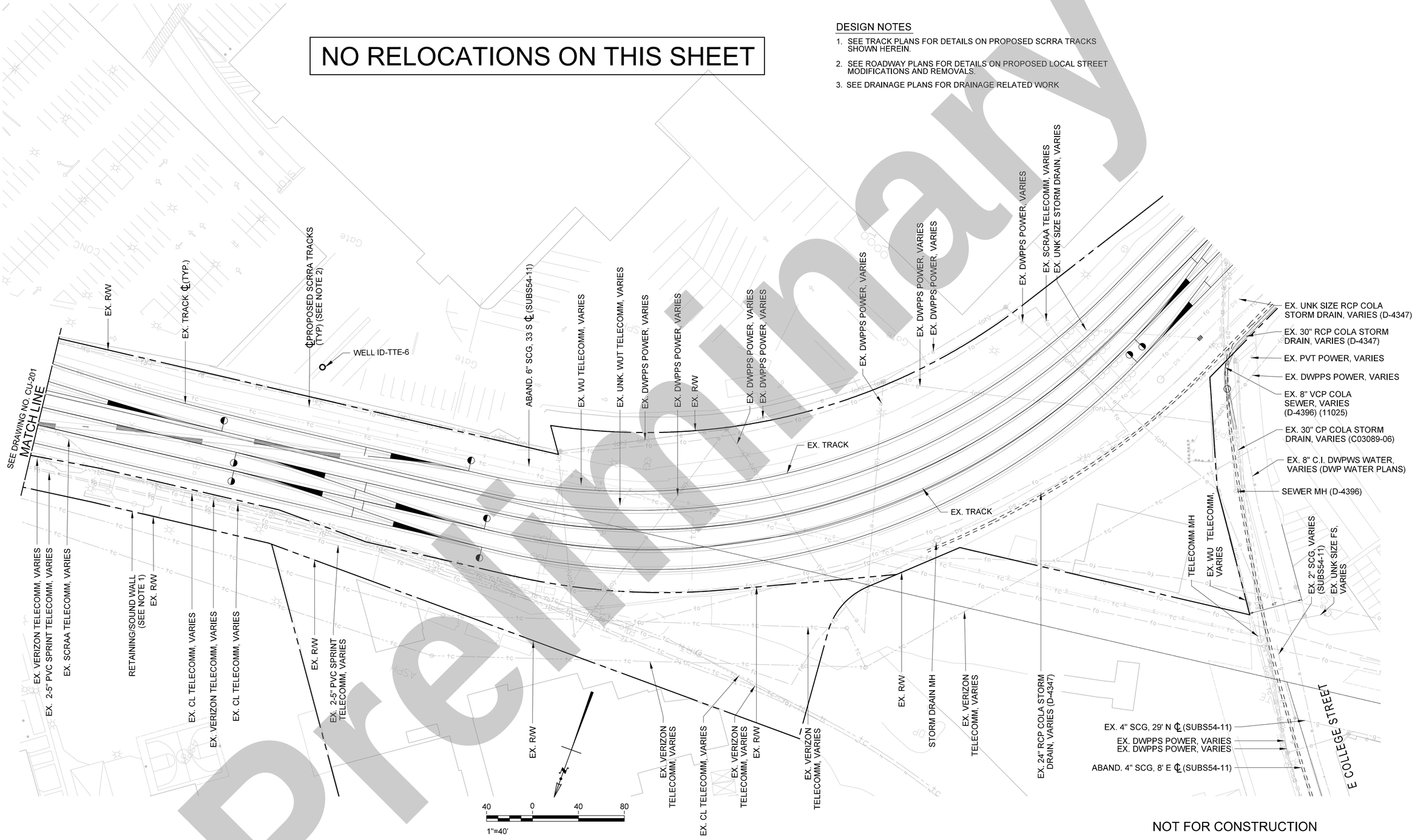

NOT FOR CONSTRUCTION

Preliminary

THE PREPARATION OF THIS DRAWING HAS BEEN FINANCED IN PART THROUGH A GRANT FROM THE U.S. DEPARTMENT OF TRANSPORTATION, FEDERAL TRANSIT ADMINISTRATION (FTA), UNDER THE FEDERAL TRANSIT ACT OF 1964, AS AMENDED, AND IN PART BY THE TAXES OF THE CITIZENS OF LOS ANGELES COUNTY AND OF THE STATE OF CALIFORNIA.

REV	DATE	BY	APP	REG NO	EXPIRES	SEAL HOLDER	DESCRIPTION

DESIGNED BY	D. BULLOCK
DRAWN BY	D. BULLOCK
CHECKED BY	S. ZAKY
IN CHARGE	T.KIM
DATE	2/21/2025

Metro

LOS ANGELES COUNTY
METROPOLITAN TRANSPORTATION AUTHORITY

BA INC (1000 DESIGNERS) TRUE ENGINEERING EXCELLENCE
750 N. San Vicente Blvd., 900 West | Los Angeles, CA 90069 | (310)237-2135 OFFICE, 310.600.7320 FAX

HDR ENGINEERING
350 S. GRAND AVENUE SUITE 2000
LOS ANGELES, CA 90071
(213) 239-5800

LINK UNION STATION PROJECT
EARLY WORKS PACKAGE 3 - PHASE A1
UTILITY RELOCATION PLANS
SHEET 2 OF 13

CONTRACT NO	PS2415-3172
DRAWING NO	CU-202
REV	0
SCALE	1"=40'
SHEET NO	122

Plot Driver=$PLTDRVS$ Pentable=PlotStamp.tbl USER = DBullock 2:07:41 PM 2/4/2025 $FILE$

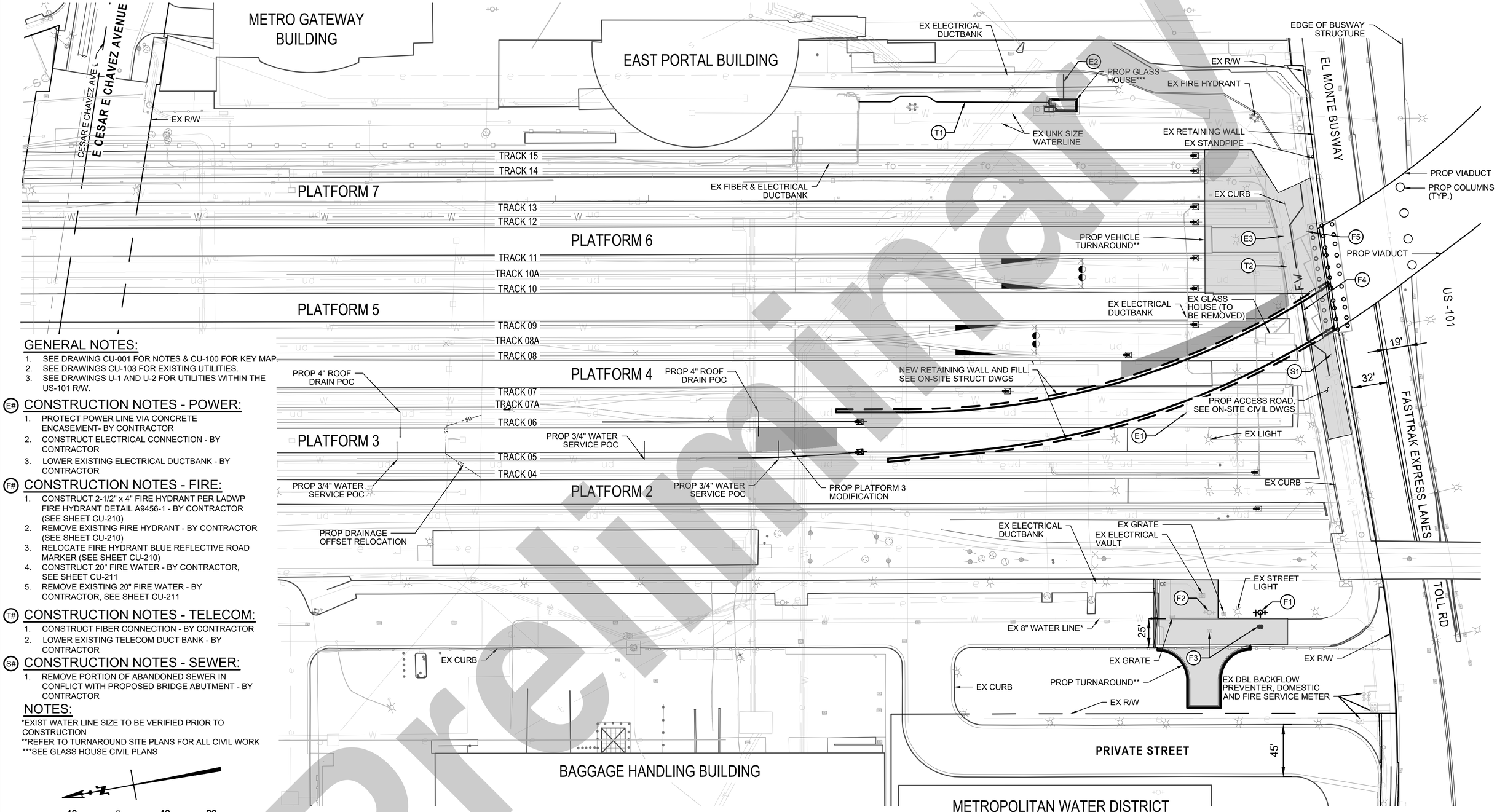

GENERAL NOTES:

1. SEE DRAWING CU-001 FOR NOTES & CU-100 FOR KEY MAP.
2. SEE DRAWINGS CU-103 FOR EXISTING UTILITIES.
3. SEE DRAWINGS U-1 AND U-2 FOR UTILITIES WITHIN THE US-101 R/W.

(E#) CONSTRUCTION NOTES - POWER:

1. PROTECT POWER LINE VIA CONCRETE ENCASEMENT- BY CONTRACTOR
2. CONSTRUCT ELECTRICAL CONNECTION - BY CONTRACTOR
3. LOWER EXISTING ELECTRICAL DUCTBANK - BY CONTRACTOR

(F#) CONSTRUCTION NOTES - FIRE:

1. CONSTRUCT 2-1/2" x 4" FIRE HYDRANT PER LADWP FIRE HYDRANT DETAIL A9456-1 - BY CONTRACTOR (SEE SHEET CU-210)
2. REMOVE EXISTING FIRE HYDRANT - BY CONTRACTOR (SEE SHEET CU-210)
3. RELOCATE FIRE HYDRANT BLUE REFLECTIVE ROAD MARKER (SEE SHEET CU-210)
4. CONSTRUCT 20" FIRE WATER - BY CONTRACTOR, SEE SHEET CU-211
5. REMOVE EXISTING 20" FIRE WATER - BY CONTRACTOR, SEE SHEET CU-211

(T#) CONSTRUCTION NOTES - TELECOM:

1. CONSTRUCT FIBER CONNECTION - BY CONTRACTOR
2. LOWER EXISTING TELECOM DUCT BANK - BY CONTRACTOR

(S#) CONSTRUCTION NOTES - SEWER:

1. REMOVE PORTION OF ABANDONED SEWER IN CONFLICT WITH PROPOSED BRIDGE ABUTMENT - BY CONTRACTOR

NOTES:

*EXIST WATER LINE SIZE TO BE VERIFIED PRIOR TO CONSTRUCTION
**REFER TO TURNAROUND SITE PLANS FOR ALL CIVIL WORK
***SEE GLASS HOUSE CIVIL PLANS

Preliminary

NOT FOR CONSTRUCTION

THE PREPARATION OF THIS DRAWING HAS BEEN FINANCED IN PART THROUGH A GRANT FROM THE U.S. DEPARTMENT OF TRANSPORTATION, FEDERAL TRANSIT ADMINISTRATION (FTA), UNDER THE FEDERAL TRANSIT ACT OF 1964, AS AMENDED, AND IN PART BY THE TAXES OF THE CITIZENS OF LOS ANGELES COUNTY AND OF THE STATE OF CALIFORNIA.

REV	DATE	BY	APP	REG NO	EXPIRES	SEAL HOLDER	DESCRIPTION

DESIGNED BY D. BULLOCK
DRAWN BY D. BULLOCK
CHECKED BY S. ZAKY
IN CHARGE T. KIM
DATE 2/21/2025

Metro
LOS ANGELES COUNTY METROPOLITAN TRANSPORTATION AUTHORITY

BA INC
HDR ENGINEERING
350 S. GRAND AVENUE SUITE 2600 LOS ANGELES, CA 90071 (213) 239-0800

LINK UNION STATION PROJECT
EARLY WORKS PACKAGE 3 - PHASE A1
UTILITY RELOCATION PLANS
SHEET 3 OF 13

CONTRACT NO PS2415-3172
DRAWING NO CU-203
REV 0
SCALE 1" = 40'
SHEET NO 123

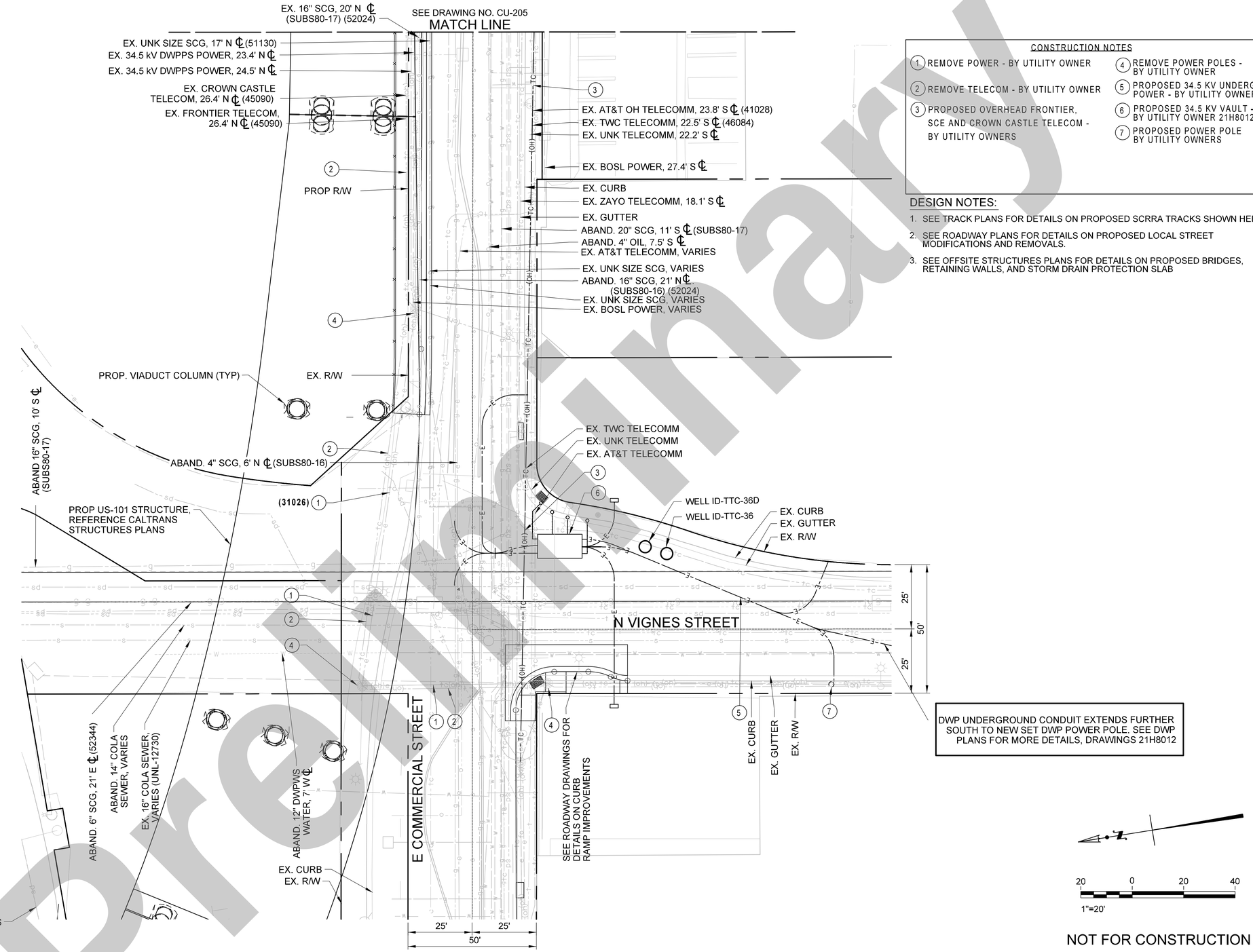

CONSTRUCTION NOTES

1. REMOVE POWER - BY UTILITY OWNER
2. REMOVE TELECOM - BY UTILITY OWNER
3. PROPOSED OVERHEAD FRONTIER, SCE AND CROWN CASTLE TELECOM - BY UTILITY OWNERS
4. REMOVE POWER POLES - BY UTILITY OWNER
5. PROPOSED 34.5 KV UNDERGROUND POWER - BY UTILITY OWNER 21H8012
6. PROPOSED 34.5 KV VAULT - BY UTILITY OWNER 21H8012
7. PROPOSED POWER POLE BY UTILITY OWNERS

DESIGN NOTES:

1. SEE TRACK PLANS FOR DETAILS ON PROPOSED SCRRA TRACKS SHOWN HEREIN.
2. SEE ROADWAY PLANS FOR DETAILS ON PROPOSED LOCAL STREET MODIFICATIONS AND REMOVALS.
3. SEE OFFSITE STRUCTURES PLANS FOR DETAILS ON PROPOSED BRIDGES, RETAINING WALLS, AND STORM DRAIN PROTECTION SLAB

DWP UNDERGROUND CONDUIT EXTENDS FURTHER SOUTH TO NEW SET DWP POWER POLE. SEE DWP PLANS FOR MORE DETAILS, DRAWINGS 21H8012

20 0 20 40
1"=20'

NOT FOR CONSTRUCTION

Preliminary

THE PREPARATION OF THIS DRAWING HAS BEEN FINANCED IN PART THROUGH A GRANT FROM THE U.S. DEPARTMENT OF TRANSPORTATION, FEDERAL TRANSIT ADMINISTRATION (FTA), UNDER THE FEDERAL TRANSIT ACT OF 1964, AS AMENDED, AND IN PART BY THE TAXES OF THE CITIZENS OF LOS ANGELES COUNTY AND OF THE STATE OF CALIFORNIA.

REV	DATE	BY	APP	REG NO	EXPIRES	SEAL HOLDER	DESCRIPTION

DESIGNED BY D. BULLOCK
DRAWN BY D. BULLOCK
CHECKED BY S. ZAKY
IN CHARGE T.KIM
DATE 2/21/2025

Metro
LOS ANGELES COUNTY METROPOLITAN TRANSPORTATION AUTHORITY

BA INC (A WOMAN OWNED FIRM) TRUE ENGINEERING EXCELLENCE
HDR ENGINEERING
350 S. GRAND AVENUE SUITE 2000 LOS ANGELES, CA 90071 (213) 239-5800

LINK UNION STATION PROJECT
EARLY WORKS PACKAGE 3 - PHASE A1
UTILITY RELOCATION PLANS
SHEET 4 OF 13

CONTRACT NO PS2415-3172
DRAWING NO CU-204 REV 0
SCALE 1"=40'
SHEET NO 124

Plot Driver=$PLTDRVS$ Pentable=PlotStamp.tbl USER = DBullock 5:54:59 PM 2/18/2025 $FILE$

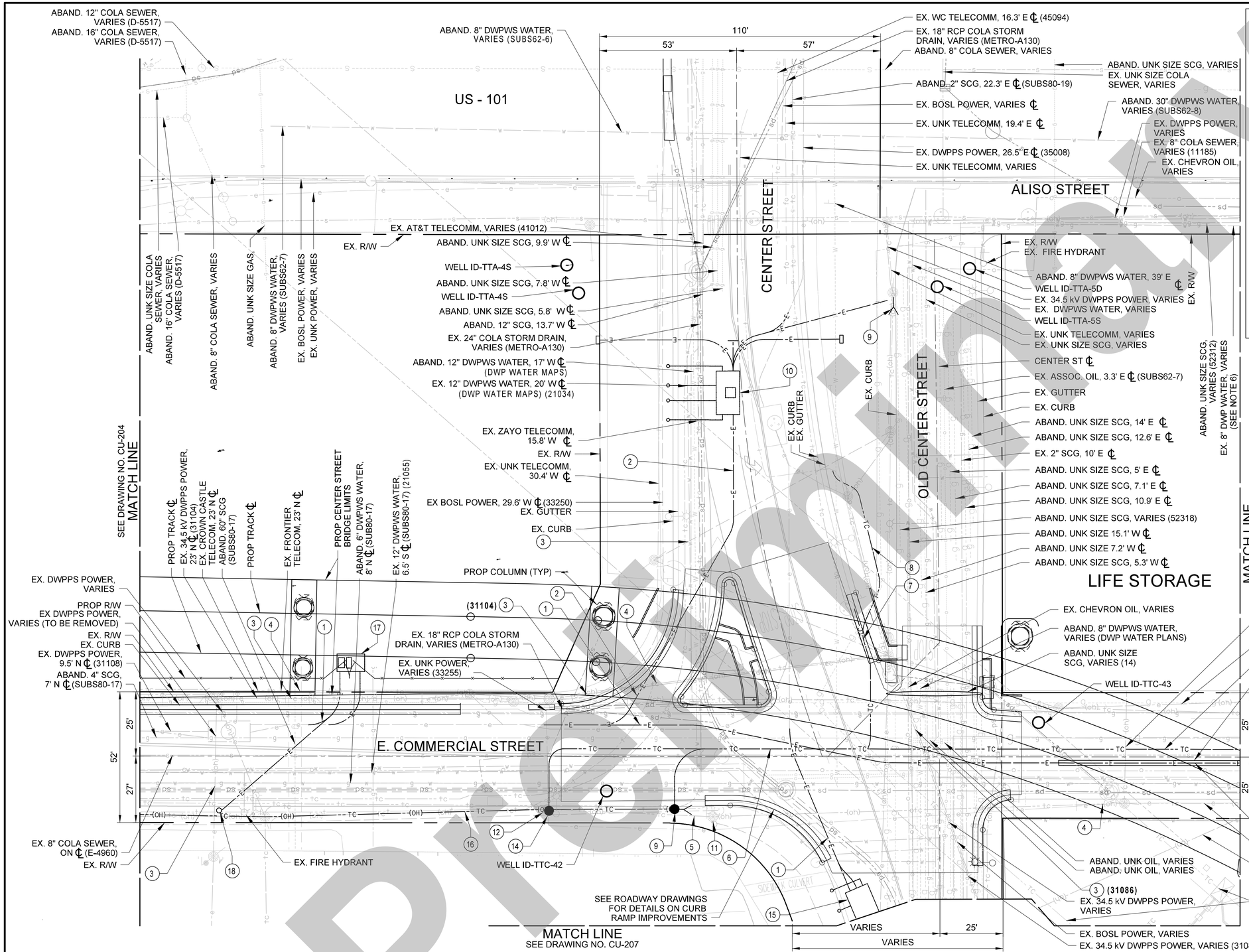

CONSTRUCTION NOTES

1. PROPOSED 34.5 KV UNDERGROUND POWER - BY UTILITY OWNER
2. PROPOSED 4.8 KV UNDERGROUND POWER - BY UTILITY OWNER
3. REMOVE POWER - BY UTILITY OWNER
4. REMOVE TELECOM - BY UTILITY OWNER
5. REMOVE OH TELECOM EAST OF NEW POLE - BY UTILITY OWNER
6. PROPOSED CROWN CASTLE, EDISON & FRONTIER JOINT TRENCH - BY UTILITY OWNERS
7. PROPOSED FRONTIER AND EDISON TELECOM - BY UTILITY OWNER
8. PROPOSED CROWN CASTLE TELECOM - BY UTILTY OWNER
9. PROPOSED DOWN GUY AND ANCHOR - BY UTILITY OWNER
10. PROPOSED 4.8 KV VAULT- BY UTILITY OWNER
11. EXISTING POLE TO SHIFT WEST TO ALLOW FOR GUYING
12. REMOVE POLE - BY UTILITY OWNER
13. PROPOSED AT&T TELECOM - BY UTILITY OWNER
14. PROPOSED AT&T POLE - BY UTILITY OWNER
15. PROPOSED 34.5 KV VAULT- BY UTILITY OWNER
16. PROPOSED OVERHEAD FRONTIER, SCE AND CROWN CASTLE TELECOM - BY UTILITY OWNER
17. PROPOSED METRO/DWP LINE SWITCH - BY UTILITY OWNER
18. PROPOSED POWER POLE - BY UTILITY OWNER
19. PROPOSED 24" CASING - BY UTILITY OWNER

DESIGN NOTES:

1. SEE TRACK PLANS FOR DETAILS ON PROPOSED SCRRA TRACKS SHOWN HEREIN.
2. SEE ROADWAY PLANS FOR DETAILS ON PROPOSED LOCAL STREET MODIFICATIONS AND REMOVALS.
3. SEE OFFSITE STRUCTURES PLANS FOR DETAILS ON PROPOSED BRIDGES, RETAINING WALLS, AND STORM DRAIN PROTECTION SLAB.
4. SEE DRAINAGE PLANS FOR DRAINAGE RELATED WORK.
5. EXISTING TELECOM SERVICE TO AMAY'S PROPERTY VIA OVERHEAD AT&T LINE ALONG COMMERCIAL STREET TO BE PERMANENTLY REMOVED. NEW TELECOM SERVICE TO BE PROVIDED VIA UNDERGROUND DUCT BANK ALONG COMMERCIAL STREET.
6. PRESERVE EXISTING 8-INCH WATER MAIN IN OLD CENTER AND ALISO STREETS AS PUBLIC MAIN WITH EASEMENT OR PIPE LICENSE AGREEMENT FOR THE PORTIONS WITHIN METRO'S PROPERTY. DWP TO OBTAIN RELEASE OF LIABILITY FROM METRO FOR PIPELINE WITHIN METRO'S PROPERTY.

NOT FOR CONSTRUCTION

Preliminary

THE PREPARATION OF THIS DRAWING HAS BEEN FINANCED IN PART THROUGH A GRANT FROM THE U.S. DEPARTMENT OF TRANSPORTATION, FEDERAL TRANSIT ADMINISTRATION (FTA), UNDER THE FEDERAL TRANSIT ACT OF 1964, AS AMENDED, AND IN PART BY THE TAXES OF THE CITIZENS OF LOS ANGELES COUNTY AND OF THE STATE OF CALIFORNIA.

REV	DATE	BY	APP	REG NO	EXPIRES	SEAL HOLDER	DESCRIPTION

DESIGNED BY	D. BULLOCK
DRAWN BY	D. BULLOCK
CHECKED BY	S. ZAKY
IN CHARGE	T.KIM
DATE	2/21/2025

Metro
LOS ANGELES COUNTY METROPOLITAN TRANSPORTATION AUTHORITY
BA INC (SDB DBE/MBE) TRUE ENGINEERING EXCELLENCE
HDR ENGINEERING
350 S. GRAND AVENUE SUITE 2000 LOS ANGELES, CA 90071 (213) 239-5800

LINK UNION STATION PROJECT
EARLY WORKS PACKAGE 3 - PHASE A1
UTILITY RELOCATION PLANS
SHEET 5 OF 13

CONTRACT NO	PS2415-3172
DRAWING NO	CU-205
REV	0
SCALE	1"=20'
SHEET NO	125

Plot Driver=$PLTDRVS$ Pentable=PlotStamp.tbl USER = magular 4:36:34 PM 2/20/2025 $FILE$

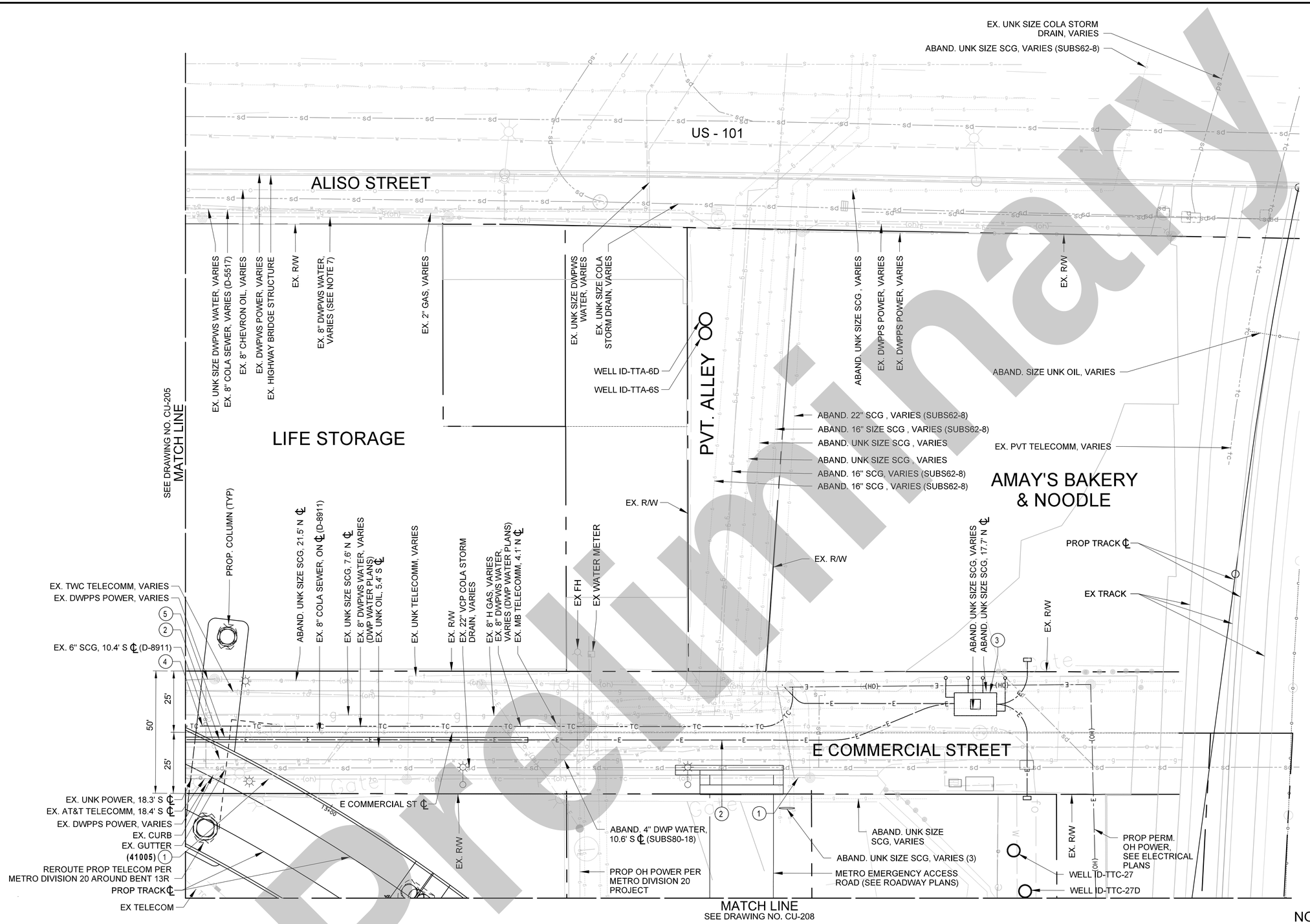

CONSTRUCTION NOTES

1. REMOVE TELECOM - BY UTILITY OWNER
2. PROPOSED 4.8 KV UNDERGROUND POWER - BY UTILITY OWNER
3. PROPOSED 4.8 KV VAULT- BY UTILITY OWNER
4. PROPOSED AT&T TELECOM - BY UTILITY OWNER
5. PROPOSED 24" CASING - BY UTILITY OWNER

DESIGN NOTES:

1. SEE TRACK PLANS FOR DETAILS ON PROPOSED SCRRA TRACKS SHOWN HEREIN.
2. SEE ROADWAY PLANS FOR DETAILS ON PROPOSED LOCAL STREET MODIFICATIONS AND REMOVALS.
3. SEE OFFSITE STRUCTURES PLANS FOR DETAILS ON PROPOSED BRIDGES, RETAINING WALLS, AND STORM DRAIN PROTECTION SLAB.
4. SEE DRAINAGE PLANS FOR DRAINAGE RELATED WORK.
5. EXISTING TELECOM SERVICE TO AMAY'S PROPERTY VIA OVERHEAD AT&T LINE ALONG COMMERCIAL STREET TO BE PERMANENTLY REMOVED. NEW TELECOM SERVICE TO BE PROVIDED VIA UNDERGROUND DUCT BANK ALONG COMMERCIAL ST.
6. PROPOSED UNDERGROUND POWER SERVICE VIA UNDERGROUND ALONG THE EASTERLY SIDE OF AMAY'S PROPERTY CONNECTING TO AN EXISTING POWER SERVICE DROP ON THE NORTHEAST CORNER OF AMAY'S PROPERTY
7. PRESERVE EXISTING 8-INCH WATER MAIN IN OLD CENTER AND ALISO STREETS AS PUBLIC MAIN WITH EASEMENT OR PIPE LICENSE AGREEMENT FOR THE PORTIONS WITHIN METRO'S PROPERTY. DWP TO OBTAIN RELEASE OF LIABILITY FROM METRO FOR PIPELINE WITHIN METRO'S PROPERTY.

NOT FOR CONSTRUCTION

Preliminary

THE PREPARATION OF THIS DRAWING HAS BEEN FINANCED IN PART THROUGH A GRANT FROM THE U.S. DEPARTMENT OF TRANSPORTATION, FEDERAL TRANSIT ADMINISTRATION (FTA), UNDER THE FEDERAL TRANSIT ACT OF 1964, AS AMENDED, AND IN PART BY THE TAXES OF THE CITIZENS OF LOS ANGELES COUNTY AND OF THE STATE OF CALIFORNIA.

REV	DATE	BY	APP	REG NO	EXPIRES	SEAL HOLDER	DESCRIPTION

DESIGNED BY D. BULLOCK
DRAWN BY D. BULLOCK
CHECKED BY S. ZAKY
IN CHARGE T.KIM
DATE 2/21/2025

Metro
LOS ANGELES COUNTY METROPOLITAN TRANSPORTATION AUTHORITY

BA INC (SBE/DBE/MBE) TRUE ENGINEERING EXCELLENCE
750 N. East Avenue Blvd., 3rd Floor | Los Angeles, CA 90033 | 213.613.0196 OFFICE | 213.629.7320 FAX

HDR ENGINEERING
350 S. GRAND AVENUE SUITE 3200 LOS ANGELES, CA 90071 (213) 236-0800

LINK UNION STATION PROJECT
EARLY WORKS PACKAGE 3 - PHASE A1
UTILITY RELOCATION PLANS
SHEET 6 OF 13

CONTRACT NO PS2415-3172
DRAWING NO CU-206 | REV 0
SCALE 1"=20'
SHEET NO 126

Plot Driver=$PLTDRVS$ Pentable=PlotStamp.tbl USER = magular 4:21:44 PM 2/20/2025 $FILE$

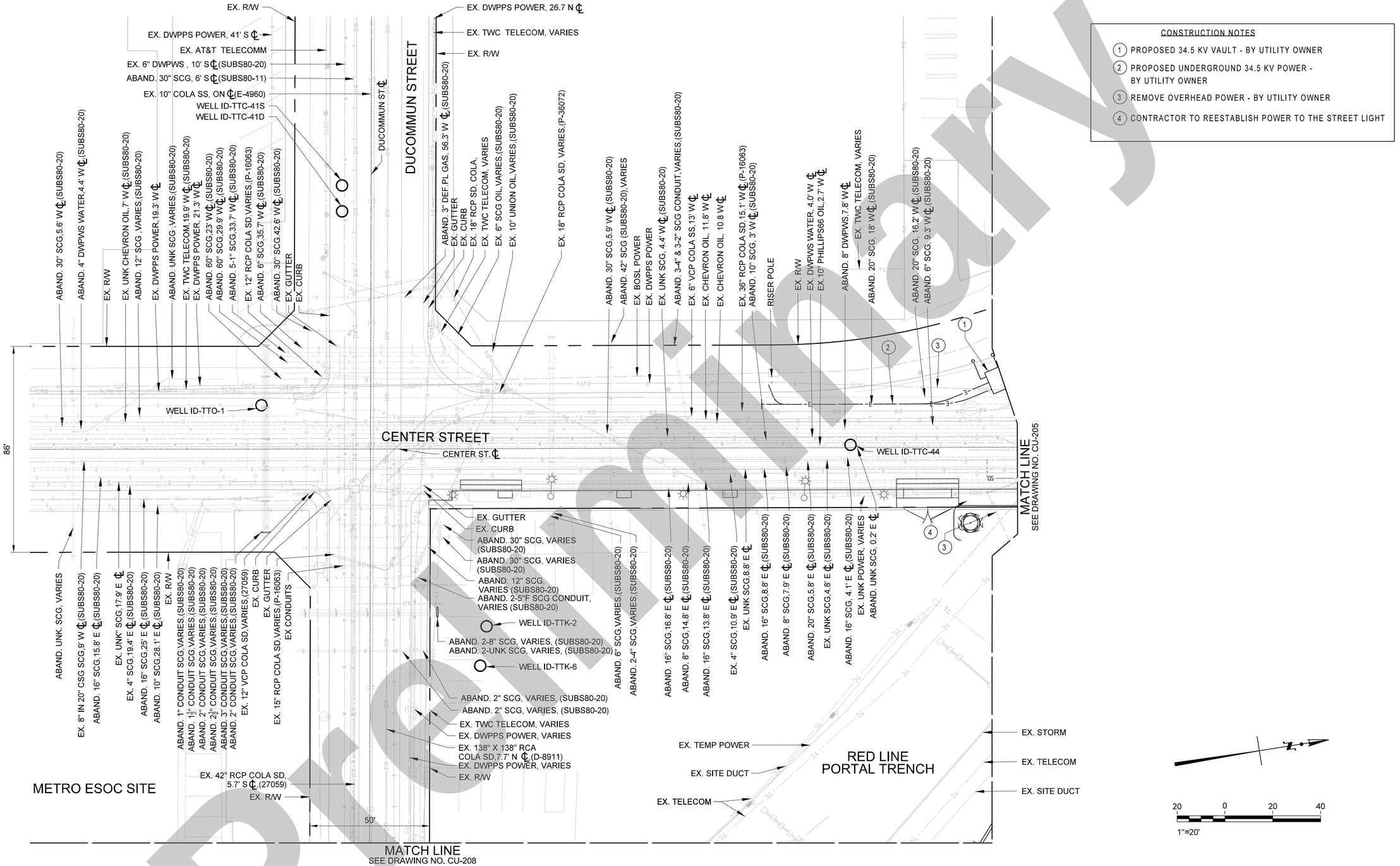

CONSTRUCTION NOTES

1. PROPOSED 34.5 KV VAULT - BY UTILITY OWNER
2. PROPOSED UNDERGROUND 34.5 KV POWER - BY UTILITY OWNER
3. REMOVE OVERHEAD POWER - BY UTILITY OWNER
4. CONTRACTOR TO REESTABLISH POWER TO THE STREET LIGHT

Preliminary

NOT FOR CONSTRUCTION

THE PREPARATION OF THIS DRAWING HAS BEEN FINANCED IN PART THROUGH A GRANT FROM THE U.S. DEPARTMENT OF TRANSPORTATION, FEDERAL TRANSIT ADMINISTRATION (FTA), UNDER THE FEDERAL TRANSIT ACT OF 1964, AS AMENDED, AND IN PART BY THE TAXES OF THE CITIZENS OF LOS ANGELES COUNTY AND OF THE STATE OF CALIFORNIA.

REV	DATE	BY	APP	REG NO	EXPIRES	SEAL HOLDER	DESCRIPTION

DESIGNED BY	D. BULLOCK
DRAWN BY	D. BULLOCK
CHECKED BY	S. ZAKY
IN CHARGE	T.KIM
DATE	2/21/2025

Metro
LOS ANGELES COUNTY
METROPOLITAN TRANSPORTATION AUTHORITY
BA INC (SUBCONSULTANT) TRUE ENGINEERING EXCELLENCE
HDR ENGINEERING
350 S. GRAND AVENUE
SUITE 2400
LOS ANGELES, CA 90071
(213) 239-5800

LINK UNION STATION PROJECT
EARLY WORKS PACKAGE 3 - PHASE A1
UTILITY RELOCATION PLANS
SHEET 7 OF 13

CONTRACT NO	PS2415-3172
DRAWING NO	CU-207
REV	0
SCALE	1"=20'
SHEET NO	127

Plot Driver=$PLTDRV$$ PentableFile=PlotStamp.tbl USER = maguilar 5:24:07 PM 2/19/2025 $FILE$

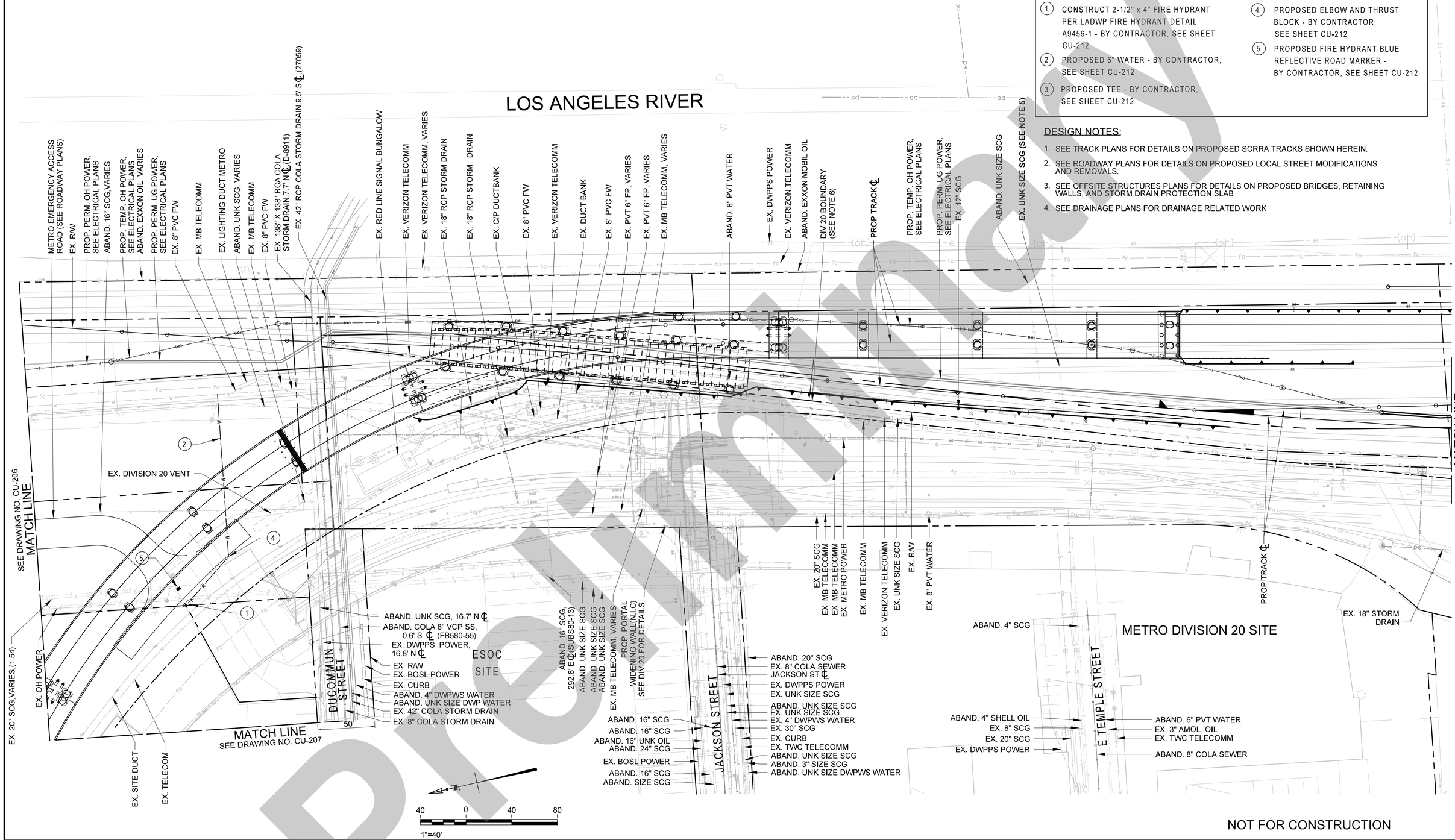

CONSTRUCTION NOTES

1. CONSTRUCT 2-1/2" x 4" FIRE HYDRANT PER LADWP FIRE HYDRANT DETAIL A9456-1 - BY CONTRACTOR, SEE SHEET CU-212
2. PROPOSED 6" WATER - BY CONTRACTOR, SEE SHEET CU-212
3. PROPOSED TEE - BY CONTRACTOR, SEE SHEET CU-212
4. PROPOSED ELBOW AND THRUST BLOCK - BY CONTRACTOR, SEE SHEET CU-212
5. PROPOSED FIRE HYDRANT BLUE REFLECTIVE ROAD MARKER - BY CONTRACTOR, SEE SHEET CU-212

DESIGN NOTES:

1. SEE TRACK PLANS FOR DETAILS ON PROPOSED SCRRA TRACKS SHOWN HEREIN.
2. SEE ROADWAY PLANS FOR DETAILS ON PROPOSED LOCAL STREET MODIFICATIONS AND REMOVALS.
3. SEE OFFSITE STRUCTURES PLANS FOR DETAILS ON PROPOSED BRIDGES, RETAINING WALLS, AND STORM DRAIN PROTECTION SLAB
4. SEE DRAINAGE PLANS FOR DRAINAGE RELATED WORK

Preliminary

NOT FOR CONSTRUCTION

THE PREPARATION OF THIS DRAWING HAS BEEN FINANCED IN PART THROUGH A GRANT FROM THE U.S. DEPARTMENT OF TRANSPORTATION, FEDERAL TRANSIT ADMINISTRATION (FTA), UNDER THE FEDERAL TRANSIT ACT OF 1964, AS AMENDED, AND IN PART BY THE TAXES OF THE CITIZENS OF LOS ANGELES COUNTY AND OF THE STATE OF CALIFORNIA.

REV	DATE	BY	APP	REG NO	EXPIRES	SEAL HOLDER	DESCRIPTION

DESIGNED BY	D. BULLOCK
DRAWN BY	D. BULLOCK
CHECKED BY	S. ZAKY
IN CHARGE	T.KIM
DATE	2/21/2025

Metro
LOS ANGELES COUNTY
METROPOLITAN TRANSPORTATION AUTHORITY
BA INC (1995-2005) MWBE TRUE ENGINEERING EXCELLENCE
750 N. San Vicente Blvd, Suite 800 West, Los Angeles, CA 90069 (310)657-2410 HEADQUARTER (310)657-2410 FAX
HDR
HDR ENGINEERING
350 S. GRAND AVENUE SUITE 2000 LOS ANGELES, CA 90071 (213) 239-5800

LINK UNION STATION PROJECT
EARLY WORKS PACKAGE 3 - PHASE A1
UTILITY RELOCATION PLANS
SHEET 8 OF 13

CONTRACT NO	PS2415-3172
DRAWING NO	CU-208
REV	0
SCALE	1"=40'
SHEET NO	128

Plot Driver=$PLTDRV$$ Pentable=PlotStamp.tbl USER = magular 9:07:41 AM 2/21/2025 $FILE$

NO RELOCATIONS ON THIS SHEET

DESIGN NOTES:

1. SEE TRACK PLANS FOR DETAILS ON PROPOSED SCRRA TRACKS SHOWN HEREIN.
2. SEE ROADWAY PLANS FOR DETAILS ON PROPOSED LOCAL STREET MODIFICATIONS AND REMOVALS.
3. SEE OFFSITE STRUCTURES PLANS FOR DETAILS ON PROPOSED BRIDGES, RETAINING WALLS, AND STORM DRAIN PROTECTION SLAB
4. SEE DRAINAGE PLANS FOR DRAINAGE RELATED WORK

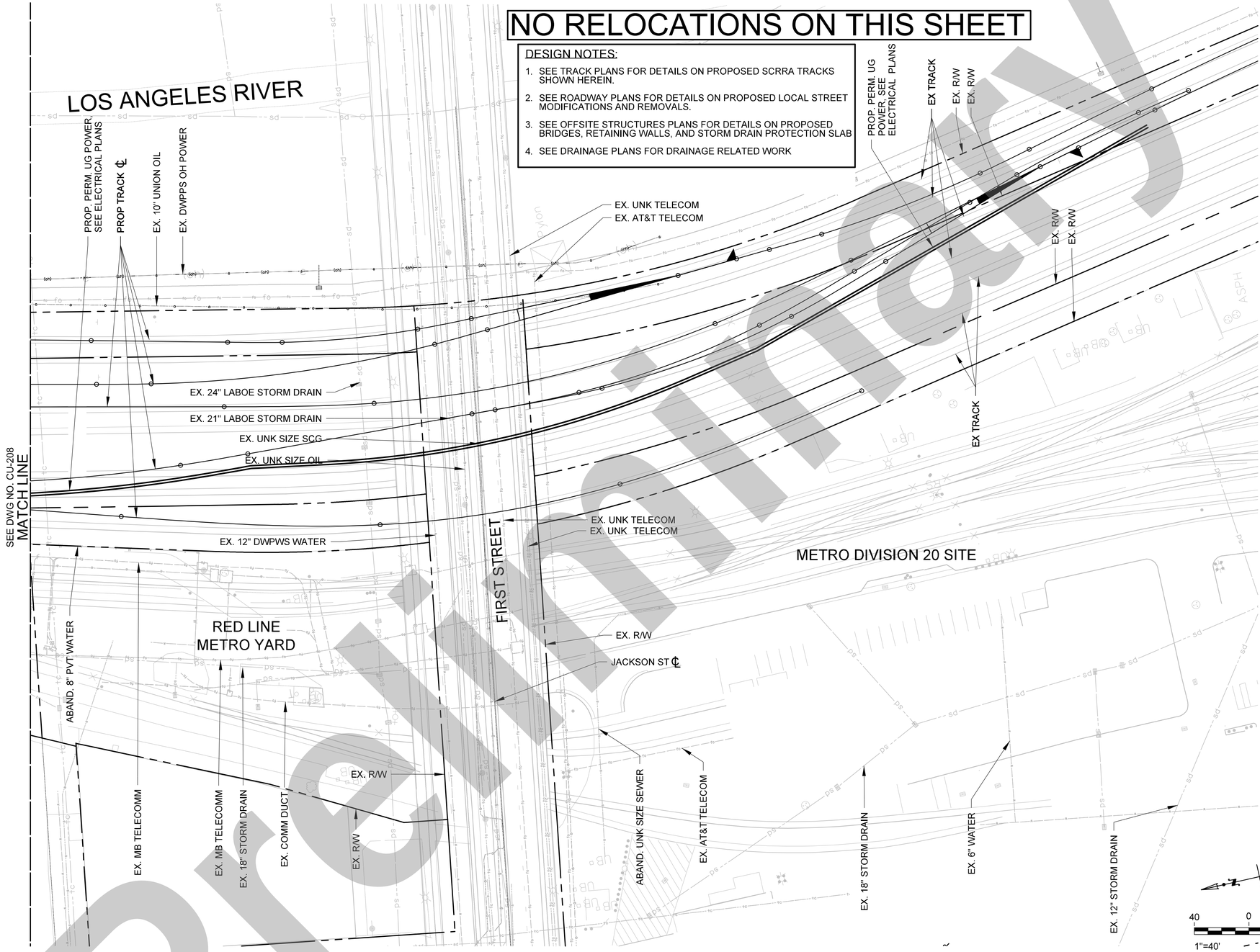

NOT FOR CONSTRUCTION

Preliminary

THE PREPARATION OF THIS DRAWING HAS BEEN FINANCED IN PART THROUGH A GRANT FROM THE U.S. DEPARTMENT OF TRANSPORTATION, FEDERAL TRANSIT ADMINISTRATION (FTA), UNDER THE FEDERAL TRANSIT ACT OF 1964, AS AMENDED, AND IN PART BY THE TAXES OF THE CITIZENS OF LOS ANGELES COUNTY AND OF THE STATE OF CALIFORNIA.

REV	DATE	BY	APP	REG NO	EXPIRES	SEAL HOLDER	DESCRIPTION

DESIGNED BY	D. BULLOCK
DRAWN BY	D. BULLOCK
CHECKED BY	S. ZAKY
IN CHARGE	T.KIM
DATE	2/21/2025

Metro

LOS ANGELES COUNTY
METROPOLITAN TRANSPORTATION AUTHORITY

EA INC (1955-DBE/MBE) TRUE ENGINEERING EXCELLENCE
750 N. Alameda Blvd. 3rd Floor Los Angeles, CA 90012
PHONE/FAX NUMBER: 213.620.1720 FAX

HDR ENGINEERING
350 S. GRAND AVENUE
SUITE 2900
LOS ANGELES, CA 90071
(213) 239-5800

LINK UNION STATION PROJECT
EARLY WORKS PACKAGE 3 - PHASE A1
UTILITY RELOCATION PLANS
SHEET 9 OF 13

CONTRACT NO	PS2415-3172
DRAWING NO	CU-209
REV	0
SCALE	1"=40'
SHEET NO	129

Plot Driver=$PLTDRVS$ Pentable=PlotStamp.tbl USER = magular 4:31:09 PM 2/20/2025 $FILE$

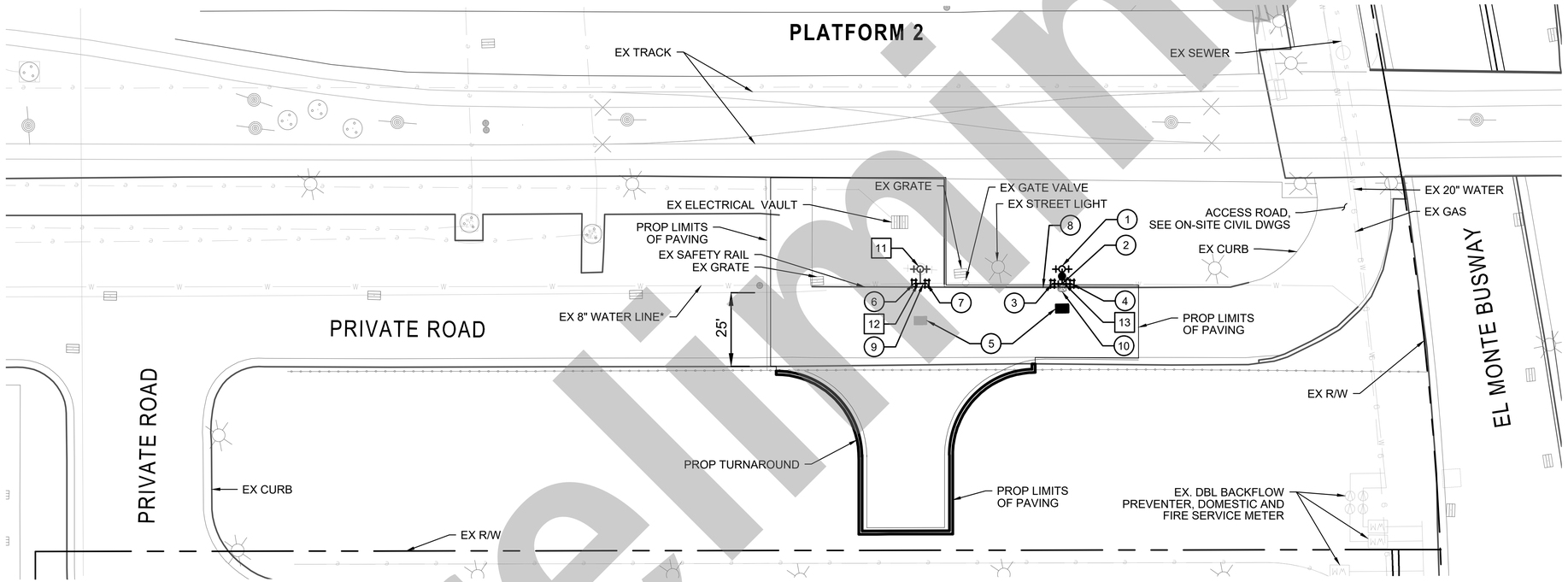

CONSTRUCTION NOTES

1. N 1842302.52, E 6490402.46
FIRE HYDRANT ASSEMBLY, LATERAL AND GATE VALVE; SEE DETAIL 1 ON CU-213
2. N 1842303.33, E 6490398.04
8" x 8" x 6" TEE*
3. N 1842306.28, E 6490398.57
CONNECT TO EXIST 8" WATER*
4. N 1842300.38, E 6490397.46
CONNECT TO EXIST 8" WATER*
5. RELOCATE FIRE HYDRANT BLUE REFLECTIVE ROAD MARKER
6. N 1842348.39, E 6490406.22
CONNECT TO EXIST 8" WATER*
7. N 1842344.45, E 6490405.55
CONNECT TO EXIST 8" WATER*
8. CONTRACTOR TO REMOVE SECTION OF EXISTING SAFETY RAILING AND REPLACE WITH CHAIN FOR FIRE HYDRANT ACCESS
9. PROPOSED 8" WATER
10. CONCRETE THRUST BLOCK; SEE DETAIL 2 ON SHEET CU-213

REMOVAL NOTES

11. REMOVE EXISTING FIRE HYDRANT AND LATERAL
12. REMOVE 8" x 8" x 6" TEE AND 4' OF EXIST 8" WATER*
13. REMOVE 6' OF EXIST 8" WATER*

NOTES

*EXIST WATER SIZE TO BE VERIFIED PRIOR TO CONSTRUCTION

**REFER TO ON SITE SOUTHWEST TURNAROUND SITE PLAN FOR ALL CIVIL WORK

20 0 20 40
1"=20'

NOT FOR CONSTRUCTION

Preliminary

THE PREPARATION OF THIS DRAWING HAS BEEN FINANCED IN PART THROUGH A GRANT FROM THE U.S. DEPARTMENT OF TRANSPORTATION, FEDERAL TRANSIT ADMINISTRATION (FTA), UNDER THE FEDERAL TRANSIT ACT OF 1964, AS AMENDED, AND IN PART BY THE TAXES OF THE CITIZENS OF LOS ANGELES COUNTY AND OF THE STATE OF CALIFORNIA.

REV	DATE	BY	APP	REG NO	EXPIRES	SEAL HOLDER	DESCRIPTION

DESIGNED BY D. BULLOCK
DRAWN BY D. BULLOCK
CHECKED BY S. ZAKY
IN CHARGE T. KIM
DATE 2/21/2025

LOS ANGELES COUNTY
METROPOLITAN TRANSPORTATION AUTHORITY

BA INC
HDR ENGINEERING
350 S. GRAND AVENUE
SUITE 2500
LOS ANGELES, CA 90071
(213) 239-5800

LINK UNION STATION PROJECT
EARLY WORKS PACKAGE 3 - PHASE A2
FIRE HYDRANT RELOCATIONS
SHEET 10 OF 13

CONTRACT NO PS2415-3172
DRAWING NO CU-210
REV 0
SCALE 1" = 20'
SHEET NO 130

WATERLINE CENTERLINE DATA			
(X)	LENGTH	BEARING	REMARKS
L1	19.00'	N 87° 37' 43" W	20" PVC
L2	19.59'	N 43° 18' 07" W	20" PVC
L3	100.00'	N 87° 37' 43" W	20" PVC
L4	19.59'	N 46° 41' 53" E	20" PVC
L5	19.00'	N 87° 37' 43" W	20" PVC

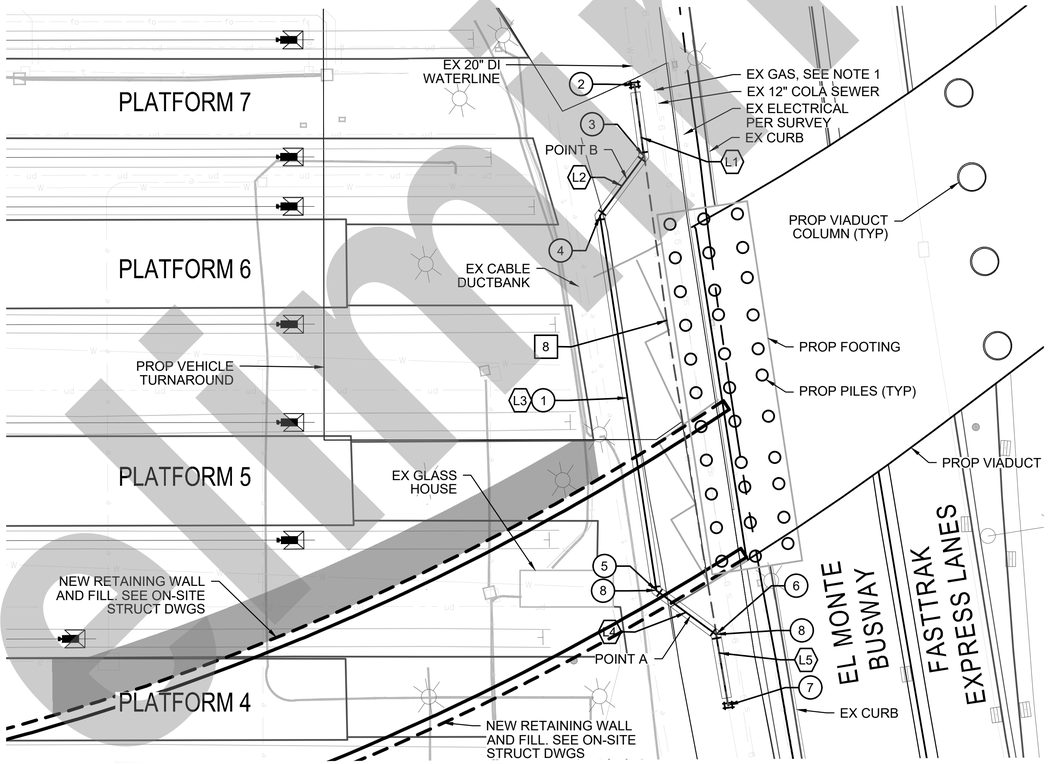

CONSTRUCTION NOTES

1. PROPOSED 20" PVC FIRE WATER MAIN IN 30" CASING
2. N 1842203.05, E 6490757.85
   CONNECT TO EXIST 20" WATER MAIN
3. N 1842203.88, E 6490738.87
   20" x 45° ROLLED BEND WITH 17' RESTRAINED LENGTH, INVERT ELEVATION 287.5'
4. N 11842218.14, E 6490725.43
   20" x 45° ROLLED BEND WITH 12' RESTRAINED LENGTH, INVERT ELEVATION 284.5'
5. N 11842221.10, E 6490625.48
   20" x 45° ROLLED BEND WITH 12' RESTRAINED LENGTH, INVERT ELEVATION 284.5'
6. N 1842207.70, E 6490611.26
   20" x 45° ROLLED BEND WITH 12' RESTRAINED LENGTH, INVERT ELEVATION 287.5'
7. N 1842207.97, E 6490592.26
   CONNECT TO EXIST 20" WATER MAIN

REMOVAL NOTES

8. REMOVE EXISTING 20" FIRE WATER MAIN

SEQUENCING NOTES:

1. INSTALL 20" PVC FIRE WATERLINE AND 30" STEEL CASING FROM POINT A TO POINT B, SEE NOTE 3
2. SHUT DOWN FIRE WATERLINE AT EASTERN VALVE AND WESTERN VALVES NEAR METERS
3. INSTALL THE TWO DROP END PIECES -- EASTERLY/WESTERLY COMPONENT -- DURING A NIGHT SHUT DOWN, SEE NOTES 4 AND 5
4. PIPELINE REMOVAL DURING ABUTMENT CONSTRUCTION

GENERAL NOTES

1. EXIST UTILITY SIZE TO BE VERIFIED PRIOR TO CONSTRUCTION
2. REFER TO STRUCTURAL PLANS FOR PROPOSED VIADUCT
3. SEGMENT OF FIRE WATERLINE TO BE FLUSHED AND CLEANED PER NFPA STANDARDS
4. AS A PRECAUTIONARY STEP, WORK TO BE PERFORMED WHILE FIRE DEPARTMENT IS ON STANDBY TO PROVIDE FIRE PROTECTION DURING THE NIGHT SHUT DOWN AS REQUIRED
5. INSTALL RESTRAINT JOINTS IN LIEU OF THRUST BLOCKS TO EXPEDITE WORK AND REDUCE THE SHUTDOWN PERIOD

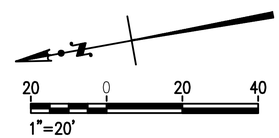

NOT FOR CONSTRUCTION

Preliminary

THE PREPARATION OF THIS DRAWING HAS BEEN FINANCED IN PART THROUGH A GRANT FROM THE U.S. DEPARTMENT OF TRANSPORTATION, FEDERAL TRANSIT ADMINISTRATION (FTA), UNDER THE FEDERAL TRANSIT ACT OF 1964, AS AMENDED, AND IN PART BY THE TAXES OF THE CITIZENS OF LOS ANGELES COUNTY AND OF THE STATE OF CALIFORNIA.

REV	DATE	BY	APP	REG NO	EXPIRES	SEAL HOLDER	DESCRIPTION

DESIGNED BY D. BULLOCK
DRAWN BY D. BULLOCK
CHECKED BY S. ZAKY
IN CHARGE T. KIM
DATE 2/21/2025

Metro
LOS ANGELES COUNTY
METROPOLITAN TRANSPORTATION AUTHORITY

BA INC
HDR ENGINEERING
350 S. GRAND AVENUE
SUITE 2900
LOS ANGELES, CA 90071
(213) 239-5800

LINK UNION STATION PROJECT
EARLY WORKS PACKAGE 3 - PHASE A2
FIRE WATER SERVICE RELOCATIONS
SHEET 11 OF 13

CONTRACT NO PS2415-3172
DRAWING NO CU-211
REV 0
SCALE 1" = 20'
SHEET NO 131

WATER CENTERLINE DATA			
(X)	LENGTH	BEARING	REMARKS
L1	53.94'	N 35° 59' 20.21"W	8" PVC
L2	142.35'	N 80° 59' 20.21" W	8" PVC

UTILITY CROSSING TABLE			
CROSSING	PROP 8" PVC PIPE ELEV	CROSSING UTILITY ELEV	Δ
1	T.O.P. ELEV 273.5'	ABAND. UNK SIZE GAS** T.O.P. ELEVATION 274.5'	1.0'
2	T.O.P. ELEV 273.7'	ABAND. UNK SIZE GAS** T.O.P. ELEVATION 274.7'	1.0'
3	T.O.P. ELEV 275.0'	ABAND. UNK SIZE GAS** T.O.P. ELEVATION 276.0'	1.0'
4	T.O.P. ELEV 274.0'	ABAND. 16" GAS T.O.P. ELEVATION 275.0'	1.0'
5	T.O.P. ELEV 273.0'	EX. LIGHTING DUCT T.O.P. ELEVATION 274.0'	1.0

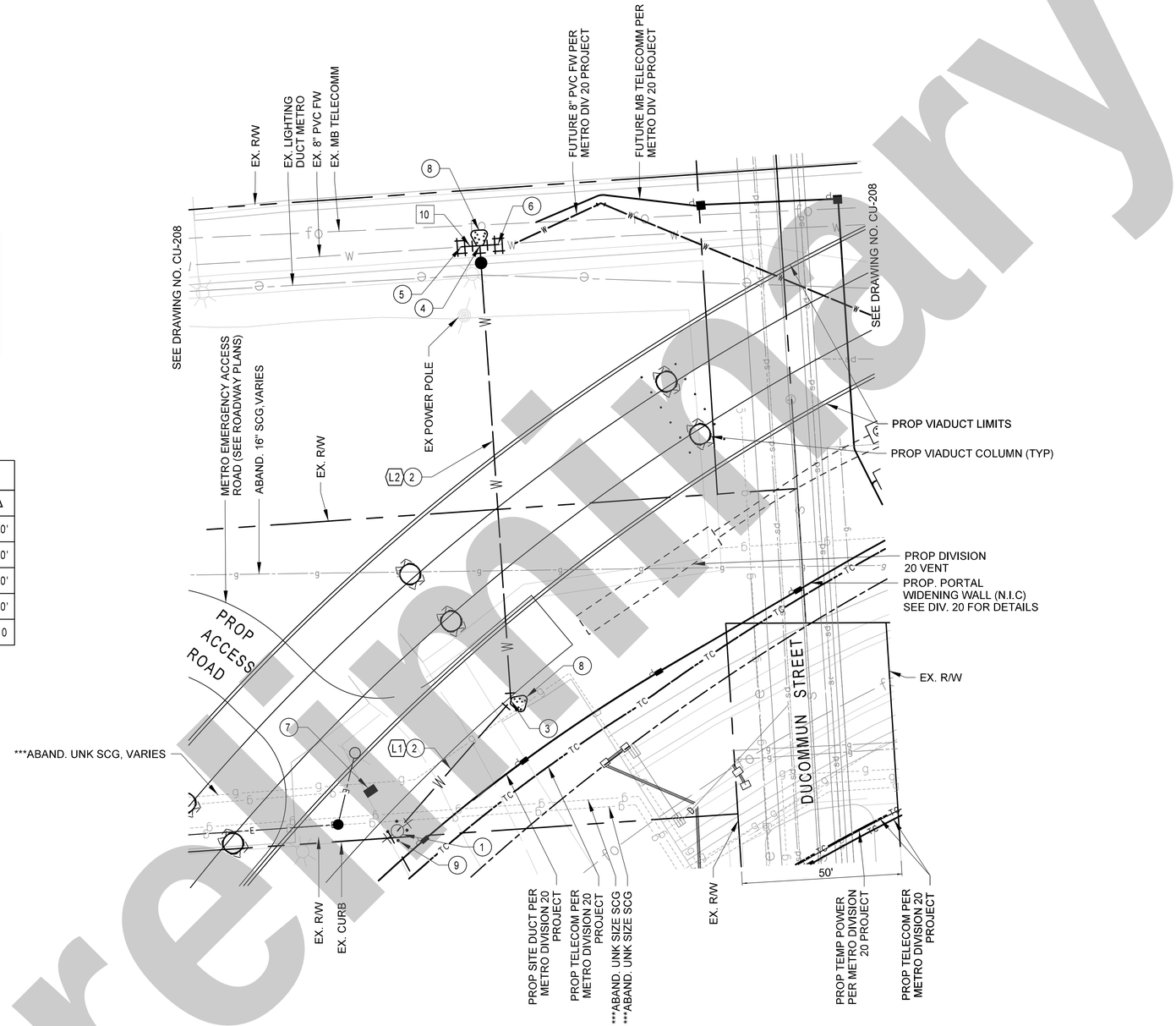

20 0 20 40

1"=20'

CONSTRUCTION NOTES

1. N 1841383.67, E 6491857.05
   FIRE HYDRANT ASSEMBLY, LATERAL AND GATE VALVE; SEE DETAIL 4 ON CU-213
2. PROPOSED 8" PVC WATER LINE WITH PIPE BEDDING; SEE DETAIL 3 ON CU-213
3. N 1841340.04, 6491888.72
   8" x 45° BEND
4. N 1841317.73, E 6492029.35
   8" x 8" x 8" TEE
5. N 1841323.51, E 6492030.29
   CONNECT TO EXIST 8" WATER WITH PVC COUPLING
6. N 1841311.94, E 6492028.40
   CONNECT TO EXIST 8" WATER WITH PVC COUPLING
7. FIRE HYDRANT BLUE REFLECTIVE ROAD MARKER
8. CONCRETE THRUST BLOCK PER DETAIL 2 ON SHEET CU-213
9. PROPOSED TYPE 1 BOLLARD; SEE DETAIL 5 ON SHEET CU-213

REMOVAL NOTES

10. REMOVE 6' OF EXISTING 8" WATER

NOTES

*CONTRACTOR TO DETERMINE MATERIAL AND O.D. OF THE EXISTING WATER LINE TO DETERMINE PROPER RESTRAINTS

**CONTRACTOR TO COORDINATE REMOVAL OF ABANDONED UTILITY BEFORE INSTALLING PROPOSED WATER

***CONTRACTOR TO VERIFY EXISTING ELEVATIONS OF CROSSING UTILITIES

Preliminary

NOT FOR CONSTRUCTION

THE PREPARATION OF THIS DRAWING HAS BEEN FINANCED IN PART THROUGH A GRANT FROM THE U.S. DEPARTMENT OF TRANSPORTATION, FEDERAL TRANSIT ADMINISTRATION (FTA), UNDER THE FEDERAL TRANSIT ACT OF 1964, AS AMENDED, AND IN PART BY THE TAXES OF THE CITIZENS OF LOS ANGELES COUNTY AND OF THE STATE OF CALIFORNIA.

REV	DATE	BY	APP	REG NO	EXPIRES	SEAL HOLDER	DESCRIPTION

DESIGNED BY	D. BULLOCK
DRAWN BY	D. BULLOCK
CHECKED BY	S. ZAKY
IN CHARGE	T.KIM
DATE	2/21/2025

Metro
LOS ANGELES COUNTY
METROPOLITAN TRANSPORTATION AUTHORITY
BA INC (SBE/DBE/MBE) TRUE ENGINEERING EXCELLENCE
HDR ENGINEERING
350 S. GRAND AVENUE
SUITE 1700
LOS ANGELES, CA 90071
(213) 239-5800

LINK UNION STATION PROJECT
EARLY WORKS PACKAGE 3 - PHASE A1
FIRE HYDRANT RELOCATIONS
SHEET 12 OF 13

CONTRACT NO	PS2415-3172
DRAWING NO	CU-212
REV	0
SCALE	1"=20'
SHEET NO	132

Plot Driver=$PLTDRV$$ Pentable=PlotStamp.tbl USER = mogulor 2:42:51 PM 2/13/2025 $FILE$

TRENCH/PH ID	STREET	UTILITY TYPE	SIZE AND MATERIAL	DEPTH-GROUND TO TOP OF UTILITY	DEPTH OF GROUND TO TOP OF ENCASEMENT	DEPTH OF GROUND TO BOTTOM OF ENCASEMENT
MWD & DIV 20 TRENCHES/ POTHOLES						
TR-9 UTI 50	CENTER ST	EAST END OF TRENCH 9	N/A	N/A	N/A	N/A
TR-9 UTI 50	CENTER ST	UNKNOWN	16.0" STEEL	19.0" T/P	N/A	N/A
TR-9 UTI 51	CENTER ST	UNKNOWN	8.0" STEEL	26.0" T/P	N/A	N/A
TR-9 UTI 52	CENTER ST	UNKNOWN	4.0" STEEL	20.5" T/P	N/A	N/A
TR-9 UTI 52	CENTER ST	UNKNOWN	16.0" STEEL	47.0" T/P	N/A	N/A
TR-9 UTI 53	CENTER ST	SLURRY CAP	EAST EDGE OF SLURRY	10.0" T/SLURRY 33.0" B/SLURRY	N/A	N/A
TR-9 UTI b4	CENTER ST	GAS	4 0 PLASTIG	46 0 T/P	N/A	N/A
TR-9 UTI 55	CENTER ST	SLURRY CAP	WEST ED OF SLURRY	10.0" T/SLURRY 33.0" B/SLURRY	N/A	N/A
TR-9 UTI 56	CENTER ST	UNKNOWN	4.0" STEEL	19.5" T/P	N/A	N/A
TR-9 UTI 56	CENTER ST	UNKNOWN	18.0" STEEL	57.5" T/P	N/A	N/A
TR-9 UTI 57	CENTER ST	UNKNOWN	EAST EDGE OF SLURRY ENCASEMENT	N/A	10.0" T/E	33.0" B/E
TR-4 UTI 1	CENTER ST	UNKNOWN	50" ENCASEMENT	N/A	7 0"	57 0"
TR-4 UTI 2	CENTER ST	UNKNOWN	20" STEEL	38.0" T/P	N/A	N/A
TR-4 UTI 3	CENTER ST	UNKNOWN	8.0" STEEL	39.0" T/P	N/A	N/A
TR-4 UTI 4	CENTER ST	UNKNOWN	UNKNOWN	N/A	N/A	N/A
TR-4 UTI 5	CENTER ST	WATER	12" STEEL	46.0" T/P	N/A	N/A
TR-4 UTI 6	CENTER ST	CENTER OF STREET	N/A	N/A	N/A	N/A
TR-4 UTI 7	CENTER ST	UNKNOWN	31.0" T/P	N/A	N/A	N/A
TR-4 UTI 8	CENTER ST	ELECTRIC	SOUTH SIDE OF CONCRETE ENCASEMENT	N/A	12.5" T/E	97.0" B/E
TR-4 BETWEEN UTI 8 & 9	CENTER ST	ELECTRIC	NORTH SIDE OF CONCRETE ENCASEMENT	N/A	12.5" T/E	97.0" B/E
TR-4 UTI 9	CENTER ST	UNKNOWN	20 0" CONCRETE	80 0" T/P	N/A	N/A
TR-4 BETWEEN UTI 9 & 10	CENTER ST	CONCRETE CAP	SOUTH SIDE OF CONCRETE	16.0" T/C & 31.0" B/E	N/A	N/A
TR-4 UTI 10	CENTER ST	GAS	4.0" PLASTIC	41.0" T/P	N/A	N/A
TR-4 UTI 10	CENTER ST	UNKNOWN	CONCRETE BOX	54.5" T/BOX & 73.5" B/BOX	N/A	N/A
TR-4 UTI 11	CENTER ST	CONCRETE CAP	NORTH SIDE OF CONCRETE	16.0" T/C & 31.0" B/E	N/A	N/A
TR-4 UTI 12	CENTER ST	STORM DRAIN	18.0" STEEL	35.0" T/P	N/A	N/A
TR-4 UTI 13	CENTER ST	UNKNOWN	ENCASEMENT	N/A	6.5" T/E	42.0" B/E
TR-4 UTI 14	CENTER ST	TRENCH 4 NORTH END	NA	N/A	N/A	N/A

TRENCH/PH ID	STREET	UTILITY TYPE	SIZE AND MATERIAL	DEPTH-GROUND TO TOP OF UTILITY	DEPTH OF GROUND TO TOP OF ENCASEMENT	DEPTH OF GROUND TO BOTTOM OF ENCASEMENT
MWD & DIV 20 TRENCHES/ POTHOLES						
TR-5 UTI 15	CENTER ST	TRENCH 5 WEST END	N/A	N/A	N/A	N/A
TR-5 UTI 16	CENTER ST	ATT-D	SLURRY ENCASEMENT	N/A	6.5" T/E	42.0" B/E
TR-5 UTI 17	CENTER ST	UNKNOWN	WEST SIDE OF SLURRY ENCASEMENT	N/A	23.0"	86.0" B/E
TR-5 UTI 18	CENTER ST	UNKNOWN	EAST SIDE OF SLURRY ENCASEMENT	N/A	23.0"	86.0" B/E
TR-5 UTI 19	CENTER ST	WATER	12.0" STEEL	51.5" T/P	N/A	N/A
TR-5 UTI 20	CENTER ST	WEST SIDE OF CROSSWALK	N/A	N/A	N/A	N/A
TR-5 UTI 21	CENTER ST	EAST SIDE OF CROSSWALK	N/A	N/A	N/A	N/A
TR-5 UTI 22	CENTER ST	CONCRETE BASE POLE	2.0" STEEL PIPE (PROTRUDING OUT OF CONCRETE BASE)	6.5" T/P	N/A	N/A
TR-5 UTI 23	CENTER ST	ELECTRIC	WEST SIDE OF SLURRY ENCASEMENT	N/A	10.0" T/E	89.0" B/E
TR-5 UTI 24	CENTER ST	ELECTRIC	EAST SIDE OF SLURRY ENCASEMENT	N/A	10.0" T/E	89.0" B/E
TR-5 UTI 25	CENTER ST	UNKNOWN	WEST SIDE OF SLURRY ENCASEMENT	N/A	12.0" T/E	78.5" B/E
TR-5 UTI 26	CENTER ST	UNKNOWN	EAST SIDE OF SLURRY ENCASEMENT	N/A	12.0" T/E	78.5" B/E
TR-5/6 UTI 27	CENTER ST	N/A	END OF TRENCH 5/START OF TRENCH 6	N/A	N/A	N/A
TR 6 BETWEEN UTI 27 & 28	CENTER ST	CONCRETE BASE POLE	1.0" PVC (PROTRUDING OUT OF CONCRETE BASE)	6.0" T/P	N/A	N/A
TR-6 UTI 28	CENTER ST	UNKNOWN	3.0" STEEL	41.0" T/P	N/A	N/A
TR-6 UTI 29	CENTER ST	UNKNOWN	8.0" STEEL	55.5" T/P	N/A	N/A
TR-6 BETWEEN 29 & 30	CENTER ST	UNKNOWN	WEST EDGE OF SLURRY CAP	N/A	15.0" T/CAP	30.0" B/CAP
TR-6 BETWEEN UTI 29 & 30	CENTER ST	UNKNOWN	EAST EDGE OF SLURRY CAP	N/A	15.0" T/CAP	30.0" B/CAP
TR-6 UTI 30	CENTER ST	SLURRY	TOP OF SLURRY	45.0" T/SLURRY	N/A	N/A
TR-6 BETWEEN UTI 30 & 31	CENTER ST	UNKNOWN	18.0" STEEL	51.0" T/P	N/A	N/A
TR-6 UTI 31	CENTER ST	UNKNOWN	10.0" STEEL	42.0" T/P	N/A	N/A
TR-6 UTI 32	CENTER ST	UNKNOWN	6.0" STEEL	45.0" T/P	N/A	N/A
TR-6 UTI 33	CENTER ST	UNKNOWN	6.0" STEEL	46.5" T/P	N/A	N/A
TR-6 BETWEEN UTI 33 & 34	CENTER ST	UNKNOWN	30.0" STEEL	88.0" T/P	N/A	N/A

Preliminary

NOT FOR CONSTRUCTION

THE PREPARATION OF THIS DRAWING HAS BEEN FINANCED IN PART THROUGH A GRANT FROM THE U.S. DEPARTMENT OF TRANSPORTATION, FEDERAL TRANSIT ADMINISTRATION (FTA), UNDER THE FEDERAL TRANSIT ACT OF 1964, AS AMENDED, AND IN PART BY THE TAXES OF THE CITIZENS OF LOS ANGELES COUNTY AND OF THE STATE OF CALIFORNIA.

REV	DATE	BY	APP	REG NO	EXPIRES	SEAL HOLDER	DESCRIPTION

DESIGNED BY D. BULLOCK
DRAWN BY D. BULLOCK
CHECKED BY S. ZAKY
IN CHARGE T.KIM
DATE 2/21/2025

Metro
LOS ANGELES COUNTY METROPOLITAN TRANSPORTATION AUTHORITY
BA INC (SAN DIEGO MBE) TRUE ENGINEERING EXCELLENCE
HDR ENGINEERING
350 S. GRAND AVENUE SUITE 2500 LOS ANGELES, CA 90071 (213) 239-5800

LINK UNION STATION PROJECT
EARLY WORKS PACKAGE 3 - PHASE A2
TRENCHING/POTHOLE SUMMARY MATRIX
SHEET 1 OF 4

CONTRACT NO PS2415-3172
DRAWING NO CU-300 REV 0
SCALE NO SCALE
SHEET NO 133

Plot Driver=$PLTDRVS$ Pentable=PlotStamp.tbl USER = DBullock 6:51:37 PM 11/26/2024 $FILE$

TRENCH/PH ID	STREET	UTILITY TYPE	SIZE AND MATERIAL	DEPTH-GROUND TO TOP OF UTILITY	DEPTH OF GROUND TO TOP OF ENCASEMENT	DEPTH OF GROUND TO BOTTOM OF ENCASEMENT
BNSF						
TRENCH 1	TEMPLE ST	TELECOM	UNK	TBD	TBD	TBD
TRENCH 3	TEMPLE ST	OIL	UNK	TBD	TBD	TBD
POTHOLE 4A	TEMPLE ST	GAS	UNK	TBD	TBD	TBD
POTHOLE 4B	TEMPLE ST	GAS	UNK	TBD	TBD	TBD
POTHOLE 5	TEMPLE ST	GAS	12" STL	TBD	TBD	TBD
POTHOLE 5	TEMPLE ST	WATER	ABANDONDED 8"	TBD	TBD	TBD
POTHOLE 5	TEMPLE ST	GAS	UNK	TBD	TBD	TBD
POTHOLE 5	TEMPLE ST	GAS	UNK	TBD	TBD	TBD
POTHOLE 6	TEMPLE ST	TELECOM	UNK	TBD	TBD	TBD
POTHOLE 7	TEMPLE ST	WATER	8" PVT	TBD	TBD	TBD
POTHOLE 8	TEMPLE ST	TELECOM	UNK	TBD	TBD	TBD
POTHOLE 8	TEMPLE ST	TELECOM	UNK	TBD	TBD	TBD
POTHOLE 8	TEMPLE ST	TELECOM	UNK	TBD	TBD	TBD
POTHOLE 9	TEMPLE ST	TELECOM	UNK	TBD	TBD	TBD
POTHOLE 9	TEMPLE ST	TELECOM	UNK	TBD	TBD	TBD
POTHOLE 9	TEMPLE ST	TELECOM	UNK	TBD	TBD	TBD
POTHOLE 9	TEMPLE ST	DWPWS	UNK	TBD	TBD	TBD
SCRRA						
TRENCH 3	BLOOM ST / BOLERO LN	SEWER	10" PVC	TBD	TBD	TBD
TRENCH 4	BLOOM ST / BOLERO LN	TELECOM	UNK	TBD	TBD	TBD
TRENCH 5	BLOOM ST / BOLERO LN	TELECOM	UNK	TBD	TBD	TBD
TRENCH 6	BLOOM ST / BOLERO LN	TELECOM	UNK	TBD	TBD	TBD
TRENCH 6	BLOOM ST / BOLERO LN	FIBER	2-5" PVC	TBD	TBD	TBD
TRENCH 7	BLOOM ST / BOLERO LN	TELECOM	UNK	TBD	TBD	TBD
TRENCH 7	BLOOM ST / BOLERO LN	TELECOM	UNK	TBD	TBD	TBD
TRENCH 7	BLOOM ST / BOLERO LN	TELECOM	UNK	TBD	TBD	TBD
TRENCH 12	BLOOM ST / BOLERO LN	FIBER	UNK	TBD	TBD	TBD
TRENCH 12	BLOOM ST / BOLERO LN	DWPPS	OVERHEAD POWER	TBD	TBD	TBD
TRENCH 13	BLOOM ST / BOLERO LN	TELECOM	TELECOM	TBD	TBD	TBD
TRENCH 13	BLOOM ST / BOLERO LN	DWPPS	OVERHEAD POWER	TBD	TBD	TBD

TRENCH/PH ID	STREET	UTILITY TYPE	SIZE AND MATERIAL	DEPTH-GROUND TO TOP OF UTILITY	DEPTH OF GROUND TO TOP OF ENCASEMENT	DEPTH OF GROUND TO BOTTOM OF ENCASEMENT
MWD & DIV 20 TRENCHES/ POTHOLES						
POTHOLE 1	DOCOMMUN ST	ELECTRIC	DUCT BANK	TBD	TBD	TBD
TRENCH 2	DOCOMMUN ST	TELECOM	DUCT BANK	TBD	TBD	TBD
TRENCH 2	DOCOMMUN ST	WATER	8" PVT FP	TBD	TBD	TBD
TRENCH 2	DOCOMMUN ST	WATER	8" PVC	TBD	TBD	TBD
POTHOLE 3-1	DOCOMMUN ST	GAS	UNK	TBD	TBD	TBD
POTHOLE 3-2	DOCOMMUN ST	SEWER	8" VCP	TBD	TBD	TBD
POTHOLE 3-2	DOCOMMUN ST	STORM DRAIN	138"X138" RCP	TBD	TBD	TBD
POTHOLE 3-3	DOCOMMUN ST	STORM DRAIN	138"X138" RCP	TBD	TBD	TBD
POTHOLE 3-3	DOCOMMUN ST	STORM DRAIN	42" RCP	TBD	TBD	TBD
COLA POTHOLE/TRENCH						
POTHOLE 2	COMMERCIAL ST / VIGNES ST	GAS	16" STL	TBD	TBD	TBD
POTHOLE 2A	COMMERCIAL ST / VIGNES ST	GAS	UNK	TBD	TBD	TBD
POTHOLE 2A	COMMERCIAL ST / VIGNES ST	TELECOM	UNK	TBD	TBD	TBD
POTHOLE 2A	COMMERCIAL ST / VIGNES ST	TELECOM	UNK	TBD	TBD	TBD
CALTRANS				TBD	TBD	TBD
POTHOLE 6	COMMERCIAL ST / VIGNES ST	TELECOM	UNK	TBD	TBD	TBD
TRENCH 7	COMMERCIAL ST / VIGNES ST	GAS	6" STL	TBD	TBD	TBD
TRENCH 8	COMMERCIAL ST / VIGNES ST	POWER	UNK	TBD	TBD	TBD
TRENCH 8	COMMERCIAL ST / VIGNES ST	SEWER	16" VCP	TBD	TBD	TBD
TRENCH 9	COMMERCIAL ST / VIGNES ST	POWER	UNK	TBD	TBD	TBD
TRENCH 9	COMMERCIAL ST / VIGNES ST	SEWR	16" VCP	TBD	TBD	TBD
TRENCH 9	COMMERCIAL ST / VIGNES ST	WATER	12" STL	TBD	TBD	TBD

Preliminary

NOT FOR CONSTRUCTION

THE PREPARATION OF THIS DRAWING HAS BEEN FINANCED IN PART THROUGH A GRANT FROM THE U.S. DEPARTMENT OF TRANSPORTATION, FEDERAL TRANSIT ADMINISTRATION (FTA), UNDER THE FEDERAL TRANSIT ACT OF 1964, AS AMENDED, AND IN PART BY THE TAXES OF THE CITIZENS OF LOS ANGELES COUNTY AND OF THE STATE OF CALIFORNIA.

REV	DATE	BY	APP	REG NO	EXPIRES	SEAL HOLDER	DESCRIPTION

DESIGNED BY D. BULLOCK
DRAWN BY D. BULLOCK
CHECKED BY S. ZAKY
IN CHARGE T.KIM
DATE 2/21/2025

Metro
LOS ANGELES COUNTY METROPOLITAN TRANSPORTATION AUTHORITY
BA INC (SDB/DBE/MBE) TRUE ENGINEERING EXCELLENCE
HDR ENGINEERING 350 S. GRAND AVENUE SUITE 2950 LOS ANGELES, CA 90071 (213) 239-5800

LINK UNION STATION PROJECT
EARLY WORKS PACKAGE 3 - PHASE A2
TRENCHING/POTHOLE SUMMARY MATRIX
SHEET 2 OF 4

CONTRACT NO PS2415-3172
DRAWING NO CU-301 REV 0
SCALE NO SCALE
SHEET NO 134

Plot Driver=$PLTDRVS$ Pentable=PlotStamp.tbl USER = DBullock 7:00:18 PM 11/26/2024 $FILE$

LINK UNION STATION
EXISTING OFF-SITE UTILITY IMPACT MATRIX
FEBRUARY 2025

ITEM NO.	PLAN SHEET NO.	UTILITY ID	UTILITY OWNER	CATEGORY	SIZE & MATERIAL	DISPOSITION	RESPONSIBILITY
1	CU-201	47050 & 47045	VERIZON	TELECOMM	1-2" HDPE & MSF-36F	TO STAY IN PLACE	UTILITY OWNER
2	CU-206	21035	LADWPWS	WATER	8" STEEL/DI PIPE	TO BE REMOVED AT END OF E COMMERCIAL ST AND CUT AND CAP AT THE ALLEY	UTILITY OWNER
3	CU-205, CU-206	21014	LADWPWS	WATER	FIRE HYDRANT	TO BE REMOVED AND RELOCATED	CONTRACTOR
4	CU-205, CU-206	52314	SCG	GAS	8" HIGH-PRESSURE STEEL MAIN	TO BE RELOCATED AND EXISTING MAIN TO BE ABANDONED IN PLACE WITH INTERFERING PORTIONS TO BE REMOVED	UTILITY OWNER
5	CU-205, CU-206	31082	LADWPPS	POWER	OVERHEAD LINES	TO BE RELOCATED INTO UNDERGROUND DUCT BANK ON COMMERCIAL ST, AND REMOVE INTERFERING OVERHEAD AND POLES	UTILITY OWNER
6	CU-205, CU-206	41005	AT&T	TELECOMM	OVERHEAD LINES	TO BE RELOCATED INTO UNDERGROUND DUCT BANK ON COMMERCIAL ST, AND OVERHEAD LINES AND POLES TO BE REMOVED	UTILITY OWNER
7	CU-204, CU-205	UNK	WILCON / CROWN CASTLE	TELECOMM	OVERHEAD LINES	TO BE RELOCATED ONTO POLES ON THE SOUTHERLY OF COMMERCIAL ST AND TRANSITION TO UNDERGROUND JOINT TRENCH, AND REMOVE INTERFERING OVERHEAD AND POLES	UTILITY OWNER
8	CU-204, CU-205	UNK	FRONTIER	TELECOMM	OVERHEAD LINES	TO BE RELOCATED ONTO POLES ON THE SOUTHERLY OF COMMERCIAL ST AND TRANSITION TO UNDERGROUND JOINT TRENCH, AND REMOVE INTERFERING OVERHEAD AND POLES	UTILITY OWNER
9	CU-204, CU-205	UNK	SCE	TELECOMM	OVERHEAD LINES	TO BE RELOCATED ONTO POLES ON THE SOUTHERLY OF COMMERCIAL ST AND TRANSITION TO UNDERGROUND JOINT TRENCH, AND REMOVE INTERFERING OVERHEAD AND POLES	UTILITY OWNER
10	CU-205	31086, 31104	LADWPPS	POWER	OVERHEAD LINES	TO BE UNDERGROUND	UTILITY OWNER
11	CU-206	31020, 31026	LADWPPS	POWER	OVERHEAD LINES	TO BE REMOVED	UTILITY OWNER
12	CU-204	UNK	LADWPPS	POWER	OVERHEAD LINES	TO BE RELOCATED INTO UNDERGROUND DUCT BANK, AND REMOVE INTERFERING OVERHEAD AND POLES	UTILITY OWNER
13	CU-201	111012	LABOE	SEWER	10"	SEWER MH TO BE RELOCATED WITHIN PUBLIC RIGHT OF WAY AND ENCASEMENT TO BE EXTENDED	CONTRACTOR
14	CU-205, CU-206	11025	LABOE	SEWER	8" VCP	INTERFERING PORTIONS TO BE REMOVED AND CAP AT THE EXISTING MH CONNECTIONS. REPLACE SEWER SERVICE WITH PRIVATE 6" LATERAL	CONTRACTOR
15	CU-206	UNK	LABOE	SEWER	MANHOLE	TO BE REMOVED	CONTRACTOR
16	CU-204	31118	BOSL	STREET LIGHTING	UNK	TO BE RELOCATED AND EXISTING UTILITY TO BE REMOVED	CONTRACTOR
17	CU-206	UNK	LADWPWS	WATER	WATER METER	TO BE RELOCATED	CONTRACTOR
18	CU-205	UNK	METRO	WATER	BACKFLOW PREVENTER	TO BE RELOCATED	CONTRACTOR

Preliminary

NOT FOR CONSTRUCTION

THE PREPARATION OF THIS DRAWING HAS BEEN FINANCED IN PART THROUGH A GRANT FROM THE U.S. DEPARTMENT OF TRANSPORTATION, FEDERAL TRANSIT ADMINISTRATION (FTA), UNDER THE FEDERAL TRANSIT ACT OF 1964, AS AMENDED, AND IN PART BY THE TAXES OF THE CITIZENS OF LOS ANGELES COUNTY AND OF THE STATE OF CALIFORNIA.

REV	DATE	BY	APP	REG NO	EXPIRES	SEAL HOLDER	DESCRIPTION

DESIGNED BY D. BULLOCK
DRAWN BY D. BULLOCK
CHECKED BY S. ZAKY
IN CHARGE T.KIM
DATE 2/21/2025

LOS ANGELES COUNTY METROPOLITAN TRANSPORTATION AUTHORITY

BA INC (SBE/DBE/MBE) TRUE ENGINEERING EXCELLENCE
HDR ENGINEERING 350 S. GRAND AVENUE SUITE 2500 LOS ANGELES, CA 90071 (213) 233-5800

LINK UNION STATION PROJECT
EARLY WORKS PACKAGE 3 - PHASE A2
EXISTING UTILITY CONFLICT MATRIX
SHEET 3 OF 4

CONTRACT NO PS2415-3172
DRAWING NO CU-302 REV 0
SCALE NO SCALE
SHEET NO 135

Plot Driver=$PLTDRV$$ Pentable=PlotStamp.tbl USER = DBullock 5:39:26 PM 3/19/2024 $FILE$

ID	UTILITY TYPE	SIZE	UTILITY LOCATION	AS-BUILT	DISPOSITION
1022	ELECTRICAL	UNKNOWN	GARDEN TRACK TO UNION STATION VILLAGE	SCRTD METRO RAIL PROJECT CONTRACT NO. A135	STAY IN PLACE
2001	AIR	1.5"	ALONG PASSAGEWAY	AMTRAK LAUS RUN THRU TRACKS 35% DESIGN PLANS	STAY IN PLACE
2002	AIR	1.5"	ALONG PASSAGEWAY	AMTRAK LAUS RUN THRU TRACKS 35% DESIGN PLANS	STAY IN PLACE
2003	AIR	1.5"	ALONG PASSAGEWAY	AMTRAK LAUS RUN THRU TRACKS 35% DESIGN PLANS	STAY IN PLACE
2004	AIR	1.5"	ALONG PASSAGEWAY	AMTRAK LAUS RUN THRU TRACKS 35% DESIGN PLANS	STAY IN PLACE
2005	AIR	1.5"	ALONG PASSAGEWAY	AMTRAK LAUS RUN THRU TRACKS 35% DESIGN PLANS	RELOCATE
2006	AIR	1.5"	ALONG PASSAGEWAY	AMTRAK LAUS RUN THRU TRACKS 35% DESIGN PLANS	STAY IN PLACE
2007	AIR	1.5"	ALONG PASSAGEWAY	AMTRAK LAUS RUN THRU TRACKS 35% DESIGN PLANS	STAY IN PLACE
2008	AIR	1.5"	EAST PORTAL	AMTRAK LAUS RUN THRU TRACKS 35% DESIGN PLANS	STAY IN PLACE
2009	AIR	1.5"	TRACK 12	AMTRAK LAUS RUN THRU TRACKS 35% DESIGN PLANS	STAY IN PLACE
2010	AIR	1.5"	TRACK 12	AMTRAK LAUS RUN THRU TRACKS 35% DESIGN PLANS	STAY IN PLACE
2011	AIR	1.5"	TRACK 11	AMTRAK LAUS RUN THRU TRACKS 35% DESIGN PLANS	STAY IN PLACE
2012	AIR	1.5"	TRACK 11	AMTRAK LAUS RUN THRU TRACKS 35% DESIGN PLANS	STAY IN PLACE
2013	AIR	1.5"	TRACK 9	AMTRAK LAUS RUN THRU TRACKS 35% DESIGN PLANS	STAY IN PLACE
2014	AIR	1.5"	TRACK 9	AMTRAK LAUS RUN THRU TRACKS 35% DESIGN PLANS	STAY IN PLACE
2015	AIR	1.5"	TRACK 7	AMTRAK LAUS RUN THRU TRACKS 35% DESIGN PLANS	STAY IN PLACE
2016	AIR	1.5"	TRACK 7	AMTRAK LAUS RUN THRU TRACKS 35% DESIGN PLANS	REMOVE
2017	AIR	1.5"	TRACK 5	AMTRAK LAUS RUN THRU TRACKS 35% DESIGN PLANS	STAY IN PLACE
2018	AIR	1.5"	TRACK 5	AMTRAK LAUS RUN THRU TRACKS 35% DESIGN PLANS	STAY IN PLACE
2019	AIR	1.5"	TRACK 3	AMTRAK LAUS RUN THRU TRACKS 35% DESIGN PLANS	STAY IN PLACE
2020	AIR	1.5"	TRACK 3	AMTRAK LAUS RUN THRU TRACKS 35% DESIGN PLANS	STAY IN PLACE
2021	ELECTRICAL	2-4"	PLATFORM 4 TO UNION STATION	LAUS_PLATFORM7_AS-BUILTS	RELOCATE
2022	ELECTRICAL	8-3"	PLATFORM 4 TO UNION STATION	LAUS_PLATFORM7_AS-BUILTS	RELOCATE
2023	ELECTRICAL	4-3" 3-2" 2-.25"	ALONG PASSAGEWAY	LAUS_PLATFORM7_AS-BUILTS	STAY IN PLACE
2024	ELECTRICAL	UNKNOWN	TRACK 4	LAUS_PLATFORM7_AS-BUILTS	STAY IN PLACE
2025	ELECTRICAL	UNKNOWN	SOUTH OF PASSAGEWAY ACROSS TRACKS	LAUS_PLATFORM7_AS-BUILTS	RELOCATE
2026	ELECTRICAL	UNKNOWN	SOUTH OF CESAR CHAVEZ AVE	LAUS_PLATFORM7_AS-BUILTS	STAY IN PLACE
2027	ELECTRICAL	UNKNOWN	SOUTH OF CESAR CHAVEZ AVE	LAUS_PLATFORM7_AS-BUILTS	STAY IN PLACE
2028	ELECTRICAL	2'X2'X4"	ALONG REAR UNION STATION PARKING	LAUS_PLATFORM7_AS-BUILTS	STAY IN PLACE
2029	ELECTRICAL	2'X2'X4"	ALONG REAR UNION STATION PARKING	LAUS_PLATFORM7_AS-BUILTS	STAY IN PLACE
2030	ELECTRICAL	2'X2'X4"	ALONG REAR UNION STATION PARKING	LAUS_PLATFORM7_AS-BUILTS	STAY IN PLACE
2031	ELECTRICAL	2'X2'X4"	ALONG REAR UNION STATION PARKING	LAUS_PLATFORM7_AS-BUILTS	STAY IN PLACE
2032	ELECTRICAL	1'X8"X10"	NORTH OF EL MONTE BUSWAY	LAUS_PLATFORM7_AS-BUILTS	RELOCATE
2033	ELECTRICAL	1'X8"X10"	NORTH OF EL MONTE BUSWAY	LAUS_PLATFORM7_AS-BUILTS	RELOCATE
2034	ELECTRICAL	1.5"X1'	TRACK 8	LAUS_PLATFORM7_AS-BUILTS	RELOCATE
2035	ELECTRICAL	2'X1'	TRACK 7	LAUS_PLATFORM7_AS-BUILTS	RELOCATE
2036	ELECTRICAL	2-4"	TRACK 7	LAUS_PLATFORM7_AS-BUILTS	RELOCATE
2037	ELECTRICAL	UNKNOWN	TRACK 8	LAUS_PLATFORM7_AS-BUILTS	RELOCATE
2038	ELECTRICAL	6-3", 3-1"	TRACK 8	LAUS_PLATFORM7_AS-BUILTS	RELOCATE
2039	ELECTRICAL	6-3", 3-1"	TRACK 8	LAUS_PLATFORM7_AS-BUILTS	RELOCATE
2040	ELECTRICAL	5-3"	ALONG PASSAGEWAY	LAUS_PLATFORM7_AS-BUILTS	STAY IN PLACE
2041	ELECTRICAL	UNKNOWN	SOUTH OF CESAR CHAVEZ AVE	SCRTD METRO RAIL PROJECT CONTRACT NO. A135	STAY IN PLACE
2042	ELECTRICAL	UNKNOWN	GARDEN TRACK TO EL MONTE BUSWAY	SCRTD METRO RAIL PROJECT CONTRACT NO. A135	STAY IN PLACE
2043	GAS	UNKNOWN	101 FREEWAY	LAUS_PLATFORM7_AS-BUILTS	REMOVE
2044	CABLE	2'X2'X4"	SOUTH OF CESAR CHAVEZ AVE	LAUS_PLATFORM7_AS-BUILTS	STAY IN PLACE
2045	CABLE	2'X2'X4"	ALONG REAR UNION STATION PARKING	LAUS_PLATFORM7_AS-BUILTS	STAY IN PLACE
2046	CABLE	2'X2'X4"	ALONG REAR UNION STATION PARKING	LAUS_PLATFORM7_AS-BUILTS	STAY IN PLACE
2047	CABLE	1-1"	101 FREEWAY	LAUS_PLATFORM7_AS-BUILTS	RELOCATE
2048	CABLE	UNKNOWN	SOUTH OF PASSAGEWAY	LAUS_PLATFORM7_AS-BUILTS	STAY IN PLACE
2049	STORM DRAIN	UNKNOWN	WEST OF METRO GATEWAY	LAUS_PLATFORM7_AS-BUILTS	STAY IN PLACE
2050	STORM DRAIN	30"	NORTH OF PASSAGEWAY	LAUS_PLATFORM7_AS-BUILTS	STAY IN PLACE
2051	STORM DRAIN	30"	EAST PORTAL TO FREEWAY	LAUS_PLATFORM7_AS-BUILTS	STAY IN PLACE
2052	STORM DRAIN	30"	SOUTH OF PASSAGEWAY	LAUS_PLATFORM7_AS-BUILTS	STAY IN PLACE
2053	STORM DRAIN	UNKNOWN	PLATFORM 7	LAUS_PLATFORM7_AS-BUILTS	STAY IN PLACE
2054	STORM DRAIN	UNKNOWN	PLATFORM 7	LAUS_PLATFORM7_AS-BUILTS	STAY IN PLACE
2055	STORM DRAIN	UNKNOWN	WEST OF ACCESS ROAD	LAUS_PLATFORM7_AS-BUILTS	STAY IN PLACE
2057	STORM DRAIN	UNKNOWN	WEST OF METRO GATEWAY	LAUS_PLATFORM7_AS-BUILTS	STAY IN PLACE
2058	STORM DRAIN	UNKNOWN	NORTH WEST OF EAST PORTAL	LAUS_PLATFORM7_AS-BUILTS	STAY IN PLACE
2059	STORM DRAIN	UNKNOWN	SOUTH WEST OF EAST PORTAL	LAUS_PLATFORM7_AS-BUILTS	STAY IN PLACE
2060	STORM DRAIN	UNKNOWN	WEST OF EAST PORTAL	LAUS_PLATFORM7_AS-BUILTS	RELOCATE
2061	SEWER	UNKNOWN	ALONG EL MONTE BUSWAY	LAUS_PLATFORM7_AS-BUILTS	REMOVE
2062	TELECOM	UNKNOWN	NORTH OF PASSAGEWAY	LAUS_PLATFORM7_AS-BUILTS	STAY IN PLACE
2063	TELECOM	UNKNOWN	ALONG REAR UNION STATION PARKING	LAUS_PLATFORM7_AS-BUILTS	STAY IN PLACE
2064	TELECOM	5-3" 2-2" 2-2.5"	SOUTH OF PASSAGEWAY	LAUS_PLATFORM7_AS-BUILTS	STAY IN PLACE
2065	TELECOM	UNKNOWN	PLATFORM 3 TO 101 FREEWAY	LAUS_PLATFORM7_AS-BUILTS	REMOVE
2066	WATER	2"	PLATFORM 2 NORTH OF PASSAGEWAY	AMTRAK LAUS RUN THRU TRACKS 35% DESIGN PLANS	STAY IN PLACE
2067	WATER	2"	PLATFORM 2 SOUTH OF PASSAGEWAY	AMTRAK LAUS RUN THRU TRACKS 35% DESIGN PLANS	STAY IN PLACE
2068	WATER	2"	PLATFORM 2 SOUTH OF PASSAGEWAY	AMTRAK LAUS RUN THRU TRACKS 35% DESIGN PLANS	STAY IN PLACE
2069	WATER	2"	PLATFORM 2 SOUTH OF PASSAGEWAY	AMTRAK LAUS RUN THRU TRACKS 35% DESIGN PLANS	STAY IN PLACE
2070	WATER	2"	PLATFORM 3 NORTH OF PASSAGEWAY	AMTRAK LAUS RUN THRU TRACKS 35% DESIGN PLANS	STAY IN PLACE
2071	WATER	2"	PLATFORM 3 SOUTH OF PASSAGEWAY	AMTRAK LAUS RUN THRU TRACKS 35% DESIGN PLANS	STAY IN PLACE
2072	WATER	2"	PLATFORM 3 SOUTH OF PASSAGEWAY	AMTRAK LAUS RUN THRU TRACKS 35% DESIGN PLANS	RELOCATE
2073	WATER	2"	PLATFORM 3 SOUTH OF PASSAGEWAY	AMTRAK LAUS RUN THRU TRACKS 35% DESIGN PLANS	RELOCATE
2074	WATER	2"	PLATFORM 4 NORTH OF PASSAGEWAY	AMTRAK LAUS RUN THRU TRACKS 35% DESIGN PLANS	STAY IN PLACE
2075	WATER	2"	PLATFORM 4 SOUTH OF PASSAGEWAY	AMTRAK LAUS RUN THRU TRACKS 35% DESIGN PLANS	STAY IN PLACE
2076	WATER	2"	PLATFORM 4 SOUTH OF PASSAGEWAY	AMTRAK LAUS RUN THRU TRACKS 35% DESIGN PLANS	REMOVE
2077	WATER	2"	PLATFORM 4 SOUTH OF PASSAGEWAY	AMTRAK LAUS RUN THRU TRACKS 35% DESIGN PLANS	REMOVE
2078	WATER	2"	PLATFORM 5 NORTH OF PASSAGEWAY	AMTRAK LAUS RUN THRU TRACKS 35% DESIGN PLANS	STAY IN PLACE
2079	WATER	2"	PLATFORM 5 SOUTH OF PASSAGEWAY	AMTRAK LAUS RUN THRU TRACKS 35% DESIGN PLANS	STAY IN PLACE
2080	WATER	2"	PLATFORM 5 SOUTH OF PASSAGEWAY	AMTRAK LAUS RUN THRU TRACKS 35% DESIGN PLANS	STAY IN PLACE
2081	WATER	2"	PLATFORM 5 SOUTH OF PASSAGEWAY	AMTRAK LAUS RUN THRU TRACKS 35% DESIGN PLANS	RELOCATE
2082	WATER	2"	PLATFORM 6 NORTH OF PASSAGEWAY	AMTRAK LAUS RUN THRU TRACKS 35% DESIGN PLANS	STAY IN PLACE
2083	WATER	2"	PLATFORM 6 SOUTH OF PASSAGEWAY	AMTRAK LAUS RUN THRU TRACKS 35% DESIGN PLANS	STAY IN PLACE
2084	WATER	2"	PLATFORM 6 SOUTH OF PASSAGEWAY	AMTRAK LAUS RUN THRU TRACKS 35% DESIGN PLANS	STAY IN PLACE
2085	WATER	2"	PLATFORM 6 SOUTH OF PASSAGEWAY	AMTRAK LAUS RUN THRU TRACKS 35% DESIGN PLANS	RELOCATE
2086	WATER	2"	PLATFORM 7 NORTH OF PASSAGEWAY	AMTRAK LAUS RUN THRU TRACKS 35% DESIGN PLANS	STAY IN PLACE
2087	WATER	2"	PLATFORM 7 SOUTH OF PASSAGEWAY	AMTRAK LAUS RUN THRU TRACKS 35% DESIGN PLANS	STAY IN PLACE
2088	WATER	2"	PLATFORM 7 SOUTH OF PASSAGEWAY	AMTRAK LAUS RUN THRU TRACKS 35% DESIGN PLANS	RELOCATE
2089	WATER	2"	SOUTH OF EAST PORTAL	LAUS_PLATFORM7_AS-BUILTS	RELOCATE
2090	WATER	20"	SOUTH ACCESS ROAD	LAUS_PLATFORM7_AS-BUILTS	RELOCATE
2091	WATER	UNKNOWN	METRO WATER DISTRICT TO 101 FREEWAY	LAUS_PLATFORM7_AS-BUILTS	RELOCATE
2092	WATER	UNKNOWN	NORTH OF EAST PORTAL	LAUS_PLATFORM7_AS-BUILTS	STAY IN PLACE
2093	WATER	UNKNOWN	PLATFORM 7 NORTH OF PASSAGEWAY	LAUS_PLATFORM7_AS-BUILTS	STAY IN PLACE
2094	WATER	2"	PLATFORM 6 SOUTH OF PASSAGEWAY	LAUS_PLATFORM7_AS-BUILTS	RELOCATE
2095	WATER	UNKNOWN	PLATFORM 7 NORTH OF PASSAGEWAY	LAUS_PLATFORM7_AS-BUILTS	STAY IN PLACE
2096	WATER	UNKNOWN	PLATFORM 7 NORTH OF PASSAGEWAY	LAUS_PLATFORM7_AS-BUILTS	STAY IN PLACE
2097	ELECTRICAL	UNKNOWN	SOUTH OF PASSAGEWAY	AMTRAK LAUS RUN THRU TRACKS 35% DESIGN PLANS	RELOCATE
2098	ELECTRICAL	UNKNOWN	ALONG REAR UNION STATION PARKING	AMTRAK LAUS RUN THRU TRACKS 35% DESIGN PLANS	STAY IN PLACE
2099	ELECTRICAL	UNKNOWN	EAST OF BAGGAGE HANDLING BUILDING	AMTRAK LAUS RUN THRU TRACKS 35% DESIGN PLANS	STAY IN PLACE
2100	ELECTRICAL	UNKNOWN	REAR UNION STATION PARKING	PASADENA BLUE LINE 6490 E-041	STAY IN PLACE
2101	ELECTRICAL	UNKNOWN	REAR UNION STATION PARKING	PASADENA BLUE LINE 6490 E-041	STAY IN PLACE
2102	OIL	UNKNOWN	REAR UNION STATION PARKING	PASADENA BLUE LINE 6490 E-041	STAY IN PLACE
2103	FIBER OPTICS	UNKNOWN	EAST OF BAGGAGE HANDLING BUILDING	PASADENA GOLD LINE FIBER OPTIC INTERFACE AT METRO RED LINE CONTRACT NUMBER C0699	STAY IN PLACE
2104	ELECTRICAL	2-4"	EAST OF BAGGAGE HANDLING BUILDING	Pasadena Gold Line fiber optic Interface at Metro Red Line Contract Number C0699	STAY IN PLACE
2105	ELECTRICAL	UNKNOWN	EAST OF BAGGAGE HANDLING BUILDING	ADJUSTED PER AIRX SURVEY: 2017-08-11	STAY IN PLACE
2106	ELECTRICAL	UNKNOWN	SOUTH ACCESS ROAD	ADJUSTED PER AIRX SURVEY: 2017-08-11	RELOCATE
2107	FIBER OPTICS	4-4"	FIRE LANE EAST OF PLATFORM 7	LAUS_Platform7_As-Builts (EP-01 to EP-04) Adjusted per AirX Survey: 2017-08-11	STAY IN PLACE
2108	WATER	UNKNOWN	ROADWAY SOUTH OF MOSAIC APTS	SITE IMPROVEMENTS 2003 - SURVEY	STAY IN PLACE
2109	WATER	UNKNOWN	FIRE LANE EAST OF PLATFORM 7	ADJUSTED PER AIRX SURVEY: 2017-08-11	RELOCATE
2112	ELECTRICAL	8-3", 4-1"	NORTH OF ACCESS ROAD	SCRTD Metro Rail Project Contract No. A135 E-201, AirX/Guida Utility Survey: 2018-06-29	RELOCATE
2113	ELECTRICAL	4-3"	PLATFORM 7	ADJUSTED PER AIRX SURVEY: 2017-08-11	STAY IN PLACE
2117	FIBER OPTICS	4-4"	EAST OF PLATFORM 7	ADJUSTED PER AIRX SURVEY: 2017-08-11	STAY IN PLACE
2118	TELECOM	2-3"	PLATFORM 7	ADJUSTED PER AIRX SURVEY: 2017-08-11	STAY IN PLACE
2119	TELECOM	3-4"	PLATFORM 7	ADJUSTED PER AIRX SURVEY: 2017-08-11	STAY IN PLACE
2120	ELECTRICAL	2-3"	NORTH OF ACCESS ROAD	ADJUSTED PER AIRX SURVEY: 2017-08-11	RELOCATE
2121	ELECTRICAL	UNKNOWN	NORTH OF ACCESS ROAD	ADJUSTED PER AIRX SURVEY: 2017-08-11	STAY IN PLACE

PRELIMINARY

NOT FOR CONSTRUCTION

THE PREPARATION OF THIS DRAWING HAS BEEN FINANCED IN PART THROUGH A GRANT FROM THE U.S. DEPARTMENT OF TRANSPORTATION, FEDERAL TRANSIT ADMINISTRATION (FTA), UNDER THE FEDERAL TRANSIT ACT OF 1964, AS AMENDED, AND IN PART BY THE TAXES OF THE CITIZENS OF LOS ANGELES COUNTY AND OF THE STATE OF CALIFORNIA.

REV	DATE	BY	APP	REG NO	EXPIRES	SEAL HOLDER	DESCRIPTION

DESIGNED BY D. BULLOCK
DRAWN BY D. BULLOCK
CHECKED BY S. ZAKY
IN CHARGE T.KIM
DATE 2/21/2025

LOS ANGELES COUNTY METROPOLITAN TRANSPORTATION AUTHORITY

BA INC (DELCOR/BAEC) TABLE ENGINEERING EXCELLENCE 300 E. 5th STREET TUCSON AZ 520.884.7350 FAX 520.884.7351

HDR ENGINEERING 350 S. GRAND AVENUE SUITE 2500 LOS ANGELES, CA 90071 (213) 229-5800

LINK UNION STATION PROJECT
EARLY WORKS PACKAGE 3 - PHASE A2
ONSITE UTILITIES - TABLE
SHEET 4 OF 4

CONTRACT NO PS2415-3172
DRAWING NO CU-303 REV 0
SCALE NO SCALE
SHEET NO 136

USER = IALTARES
C:\PW\WORKING\SA\CID\085843\LUS-BORDER-BA.DWG

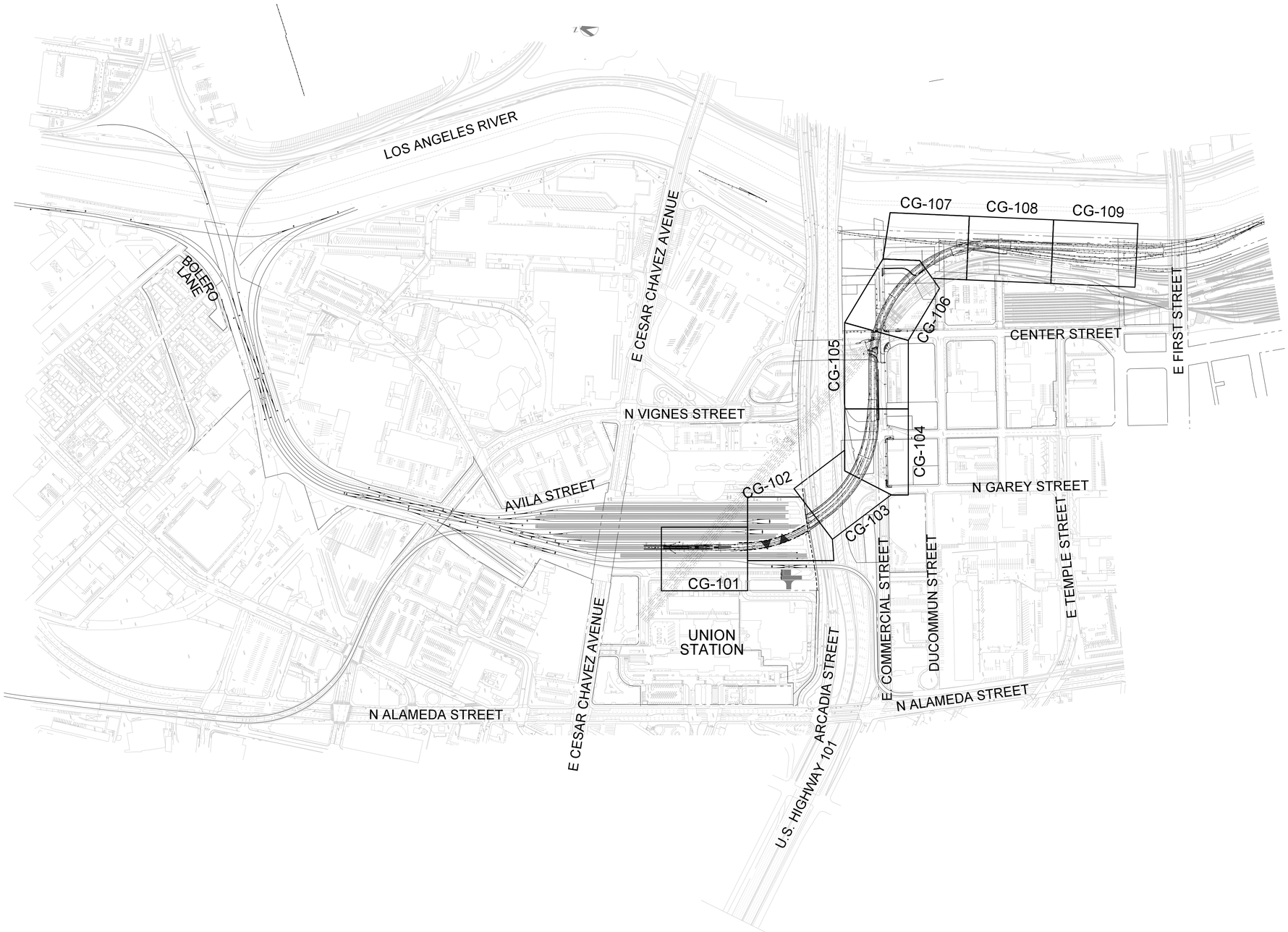

THE PREPARATION OF THIS DRAWING HAS BEEN FINANCED IN PART THROUGH A GRANT FROM THE U.S. DEPARTMENT OF TRANSPORTATION, FEDERAL TRANSIT ADMINISTRATION (FTA), UNDER THE FEDERAL TRANSIT ACT OF 1964, AS AMENDED, AND IN PART BY THE TAXES OF THE CITIZENS OF LOS ANGELES COUNTY AND OF THE STATE OF CALIFORNIA.

REV	DATE	BY	APP	REG NO	EXPIRES	SEAL HOLDER	DESCRIPTION

DESIGNED BY: F. ZHEN
DRAWN BY: V. SANTIAGO
CHECKED BY: M. HARROLD
IN CHARGE: T. KIM
DATE: 02/25/2025

Metro

LOS ANGELES COUNTY
METROPOLITAN TRANSPORTATION AUTHORITY

HDR ENGINEERING
350 S. GRAND AVENUE
SUITE 2900
LOS ANGELES, CA 90071
(213) 239-5800

LINK UNION STATION PROJECT

DRAINAGE PLANS
KEY MAP

CONTRACT NO: PS2415-3172
DRAWING NO: CG-002
REV: 0
SCALE: 1"=300'
SHEET NO: 137

Plot Driver=$PLTDRVS$ Pentable=PlotStamp.tbl USER = VSANTIAGO 3:56:00 PM 2/20/2025 $FILE$

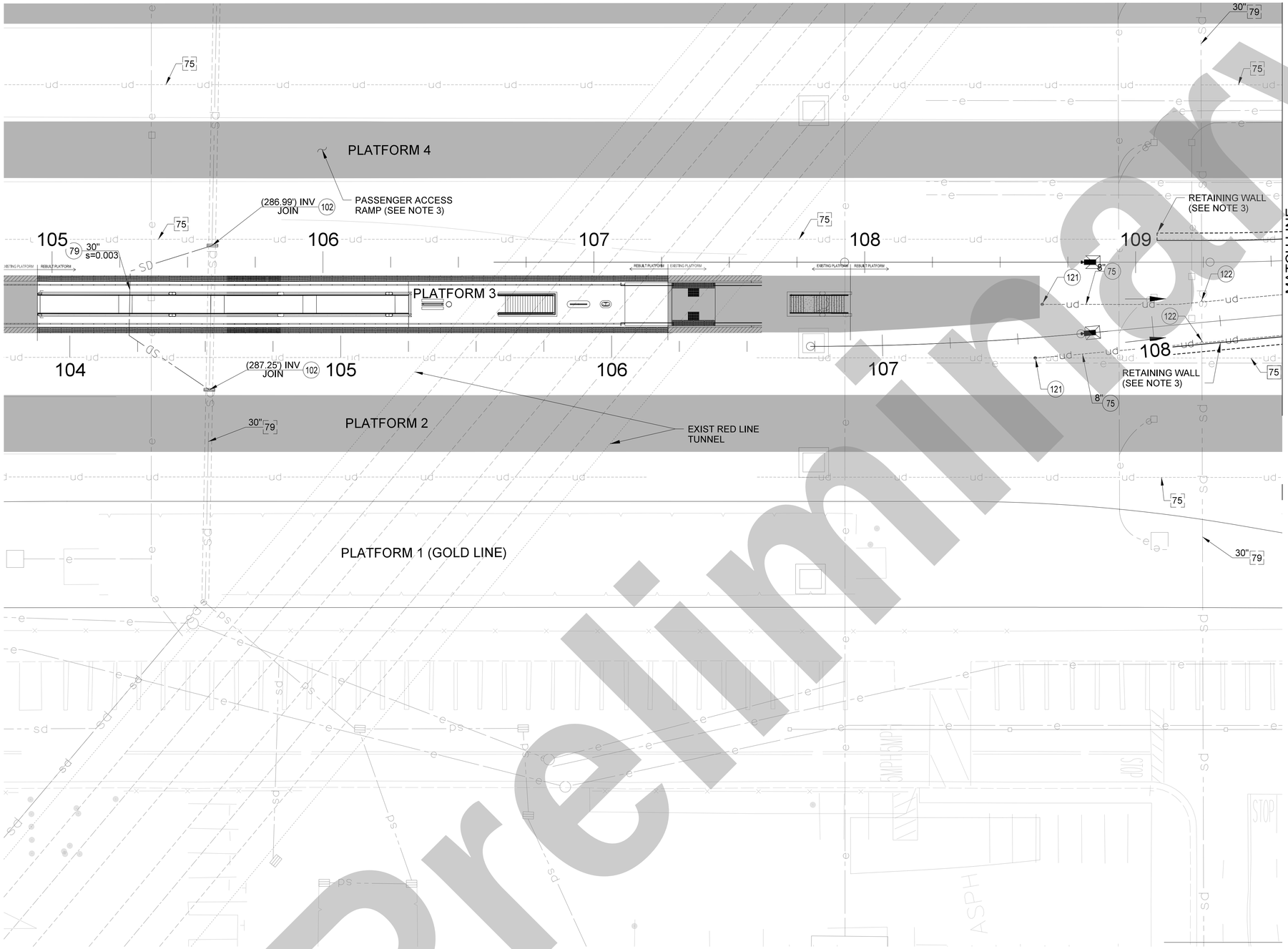

MATCH LINE
SEE DRAWING NO. CG-102

CONSTRUCTION SYMBOLS:

CONSTRUCT	REMODEL EXISTING
EXISTING	REMOVE AND CONSTRUCT
REMOVE	WORK BY OTHERS

CONSTRUCTION NOTES:

75	PERFORATED CORRUGATED METAL PIPE (CMP), SIZE PER PLAN
79	REINFORCED CONCRETE PIPE (RCP)
102	TRANSITION STRUCTURE PER SPPWC 340-2
121	UNDERDRAIN TERMINAL / INTERMEDIATE CLEANOUT
122	UNDERDRAIN SADDLE CONNECTION

NOTES:

1. SEE TRACK PLANS FOR DETAILS ON PROPOSED SCRRA TRACKS SHOWN HEREIN.
2. SEE COLA STREET IMPROVEMENT PLANS FOR DETAILS ON PROPOSED IMPROVEMENTS ALONG PUBLIC STREETS.
3. SEE STRUCTURES PLANS FOR DETAILS ON PROPOSED BRIDGES, RETAINING WALLS, AND STORM DRAIN PROTECTION SLAB.
4. SEE CIVIL PLANS FOR SOUTHEAST TURNAROUND AREA FOR DETAILS ON DRAINAGE MODIFICATIONS ASSOCIATED WITH SOUTHEAST TURNAROUND CONSTRUCTION.
5. SEE DRAINAGE AND GRADING PLANS FOR DETAILS OF TRACK UNDERDRAIN NOT ON VIADUCT STRUCTURE.
6. SEE CIVIL PLANS FOR EMERGENCY VEHICLE TURNAROUND FOR DETAILS ON PROPOSED STORM DRAIN.

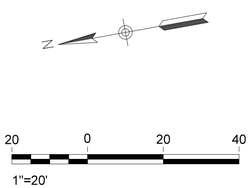

Preliminary

THE PREPARATION OF THIS DRAWING HAS BEEN FINANCED IN PART THROUGH A GRANT FROM THE U.S. DEPARTMENT OF TRANSPORTATION, FEDERAL TRANSIT ADMINISTRATION (FTA), UNDER THE FEDERAL TRANSIT ACT OF 1964, AS AMENDED, AND IN PART BY THE TAXES OF THE CITIZENS OF LOS ANGELES COUNTY AND OF THE STATE OF CALIFORNIA.

REV	DATE	BY	APP	REG NO	EXPIRES	SEAL HOLDER	DESCRIPTION

DESIGNED BY	F. ZHEN
DRAWN BY	V. SANTIAGO
CHECKED BY	M. HARROLD
IN CHARGE	T. KIM
DATE	02/25/2025

Metro
LOS ANGELES COUNTY
METROPOLITAN TRANSPORTATION AUTHORITY
HDR
350 S. GRAND AVENUE
SUITE 2900
LOS ANGELES, CA 90071
(213) 239-5800

LINK UNION STATION PROJECT

DRAINAGE PLANS
SHEET 1 OF 9

CONTRACT NO	PS2415-3172
DRAWING NO	CG-101
REV	0
SCALE	1"=20'
SHEET NO	138

Plot Driver=$PLTDRV$$ Pentable=PlotStamp.tbl USER = CCASASOLA3:07:17 PM 2/20/2025 $FILE$

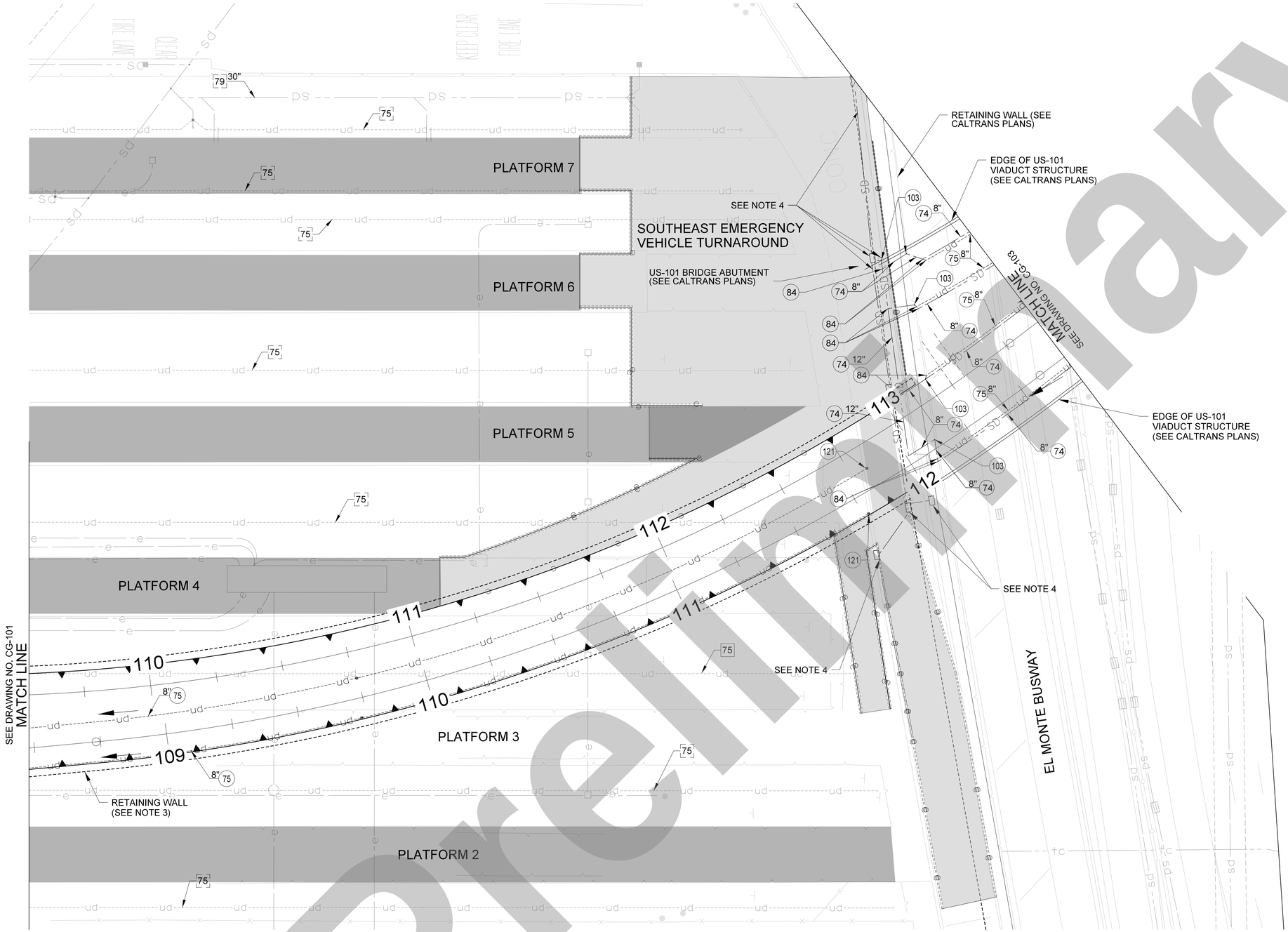

CONSTRUCTION SYMBOLS:

CONSTRUCT	REMODEL EXISTING
EXISTING	REMOVE AND CONSTRUCT
REMOVE	WORK BY OTHERS

CONSTRUCTION NOTES:

74	CORRUGATED METAL PIPE, SIZE PER PLAN
75	PERFORATED CORRUGATED METAL PIPE (CMP), SIZE PER PLAN
79	REINFORCED CONCRETE PIPE (RCP)
84	CONNECTION TO STORM DRAIN WITH FITTINGS NEEDED
103	BRIDGE DECK DOWN DRAIN
121	UNDERDRAIN TERMINAL / INTERMEDIATE CLEANOUT

NOTES:

1. SEE TRACK PLANS FOR DETAILS ON PROPOSED SCRRA TRACKS SHOWN HEREIN.
2. SEE COLA STREET IMPROVEMENT PLANS FOR DETAILS ON PROPOSED IMPROVEMENTS ALONG PUBLIC STREETS.
3. SEE STRUCTURES PLANS FOR DETAILS ON PROPOSED BRIDGES, RETAINING WALLS, AND STORM DRAIN PROTECTION SLAB.
4. SEE CIVIL PLANS FOR SOUTHEAST TURNAROUND AREA FOR DETAILS ON DRAINAGE MODIFICATIONS ASSOCIATED WITH SOUTHEAST TURNAROUND CONSTRUCTION.
5. SEE DRAINAGE AND GRADING PLANS FOR DETAILS OF TRACK UNDERDRAIN NOT ON VIADUCT STRUCTURE.
6. SEE CIVIL PLANS FOR EMERGENCY VEHICLE TURNAROUND FOR DETAILS ON PROPOSED STORM DRAIN.

N

20 0 20 40
1"=20'

Preliminary

THE PREPARATION OF THIS DRAWING HAS BEEN FINANCED IN PART THROUGH A GRANT FROM THE U.S. DEPARTMENT OF TRANSPORTATION, FEDERAL TRANSIT ADMINISTRATION (FTA), UNDER THE FEDERAL TRANSIT ACT OF 1964, AS AMENDED, AND IN PART BY THE TAXES OF THE CITIZENS OF LOS ANGELES COUNTY AND OF THE STATE OF CALIFORNIA.

REV	DATE	BY	APP	REG NO	EXPIRES	SEAL HOLDER	DESCRIPTION

DESIGNED BY F. ZHEN
DRAWN BY V. SANTIAGO
CHECKED BY M. HARROLD
IN CHARGE T. KIM
DATE 02/25/2025

Metro
LOS ANGELES COUNTY METROPOLITAN TRANSPORTATION AUTHORITY
HDR ENGINEERING
350 S. GRAND AVENUE SUITE 2900 LOS ANGELES, CA 90071 (213) 239-5800

LINK UNION STATION PROJECT
DRAINAGE PLANS SHEET 2 OF 9

CONTRACT NO PS2415-3172
DRAWING NO CG-102 REV 0
SCALE 1"=20'
SHEET NO 139

Plot Driver=$PLTDRVR$$ Pentable=PlotStamp.tbl USER = CCASASOLA0:56:41 AM 2/21/2025 $FILE$

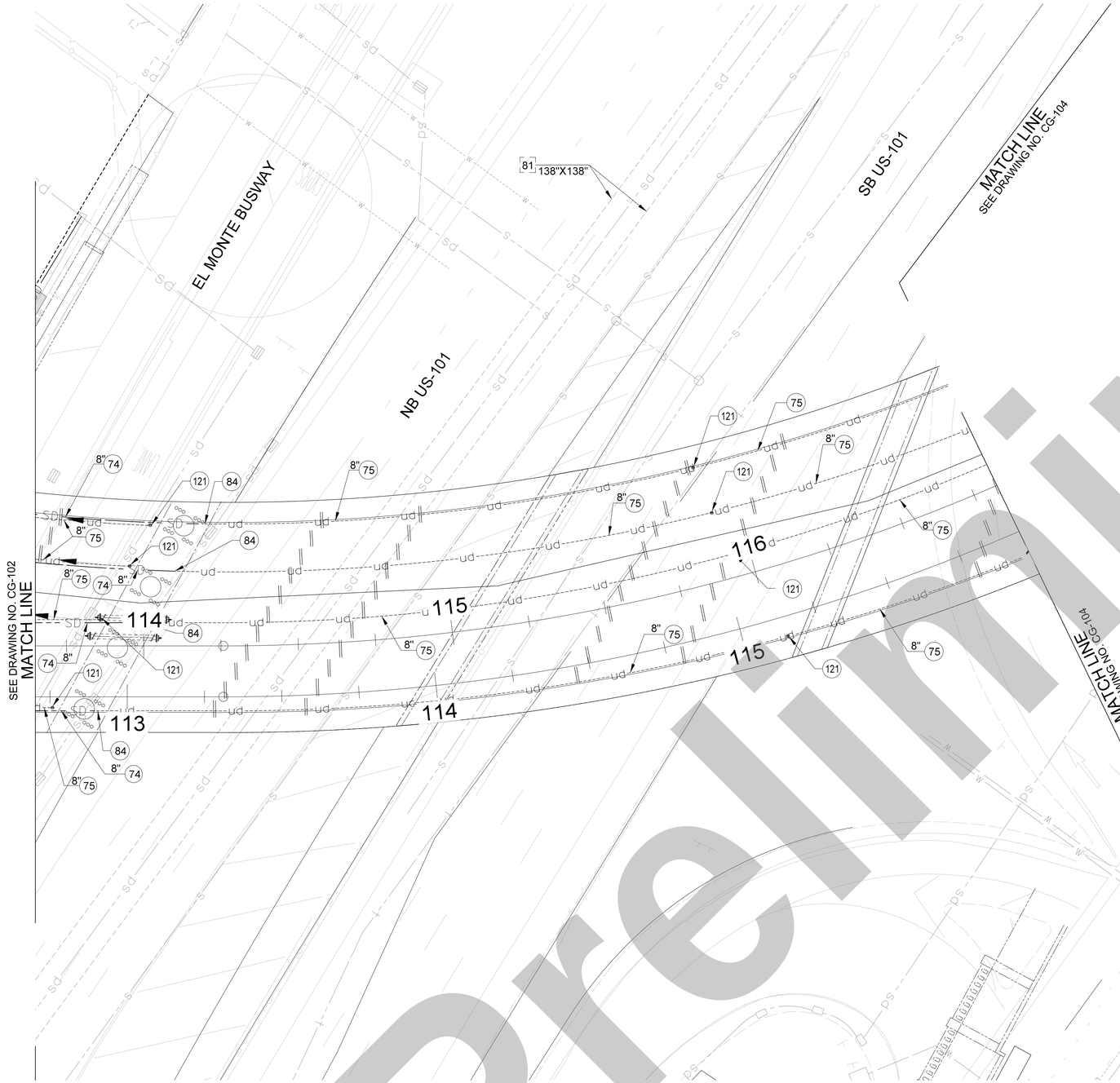

CONSTRUCTION SYMBOLS:

- CONSTRUCT
- EXISTING
- REMOVE
- REMODEL EXISTING
- REMOVE AND CONSTRUCT
- WORK BY OTHERS

CONSTRUCTION NOTES:

74 CORRUGATED METAL PIPE (CMP), SIZE PER PLAN
75 PERFORATED CORRUGATED METAL PIPE (CMP), SIZE PER PLAN
81 REINFORCED CONCRETE ARCH (RCA)
84 CONNECTION TO STORM DRAIN WITH FITTINGS NEEDED
121 UNDERDRAIN TERMINAL / INTERMEDIATE CLEANOUT

NOTES:

1. SEE TRACK PLANS FOR DETAILS ON PROPOSED SCRRA TRACKS SHOWN HEREIN.
2. SEE COLA STREET IMPROVEMENT PLANS FOR DETAILS ON PROPOSED IMPROVEMENTS ALONG PUBLIC STREETS.
3. SEE STRUCTURES PLANS FOR DETAILS ON PROPOSED BRIDGES, RETAINING WALLS, AND STORM DRAIN PROTECTION SLAB.
4. SEE CIVIL PLANS FOR SOUTHEAST TURNAROUND AREA FOR DETAILS ON DRAINAGE MODIFICATIONS ASSOCIATED WITH SOUTHEAST TURNAROUND CONSTRUCTION.
5. SEE DRAINAGE AND GRADING PLANS FOR DETAILS OF TRACK UNDERDRAIN NOT ON VIADUCT STRUCTURE.
6. SEE CIVIL PLANS FOR EMERGENCY VEHICLE TURNAROUND FOR DETAILS ON PROPOSED STORM DRAIN.

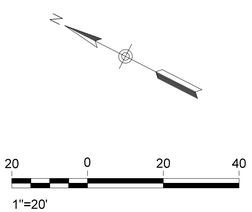

Preliminary

THE PREPARATION OF THIS DRAWING HAS BEEN FINANCED IN PART THROUGH A GRANT FROM THE U.S. DEPARTMENT OF TRANSPORTATION, FEDERAL TRANSIT ADMINISTRATION (FTA), UNDER THE FEDERAL TRANSIT ACT OF 1964, AS AMENDED, AND IN PART BY THE TAXES OF THE CITIZENS OF LOS ANGELES COUNTY AND OF THE STATE OF CALIFORNIA.

REV	DATE	BY	APP	REG NO	EXPIRES	SEAL HOLDER	DESCRIPTION

DESIGNED BY F. ZHEN
DRAWN BY V. SANTIAGO
CHECKED BY M. HARROLD
IN CHARGE T. KIM
DATE 02/25/2025

Metro
LOS ANGELES COUNTY
METROPOLITAN TRANSPORTATION AUTHORITY
HDR
350 S. GRAND AVENUE
SUITE 2900
LOS ANGELES, CA 90071
(213) 239-5800

LINK UNION STATION PROJECT
DRAINAGE PLANS
SHEET 3 OF 9

CONTRACT NO PS2415-3172
DRAWING NO CG-103
REV 0
SCALE 1"=20'
SHEET NO 140

Plot Driver=$PLTDRVS$ Pentable=PlotStamp.tbl USER = CCASASOLA#1:31:17 AM 2/20/2025 $FILE$

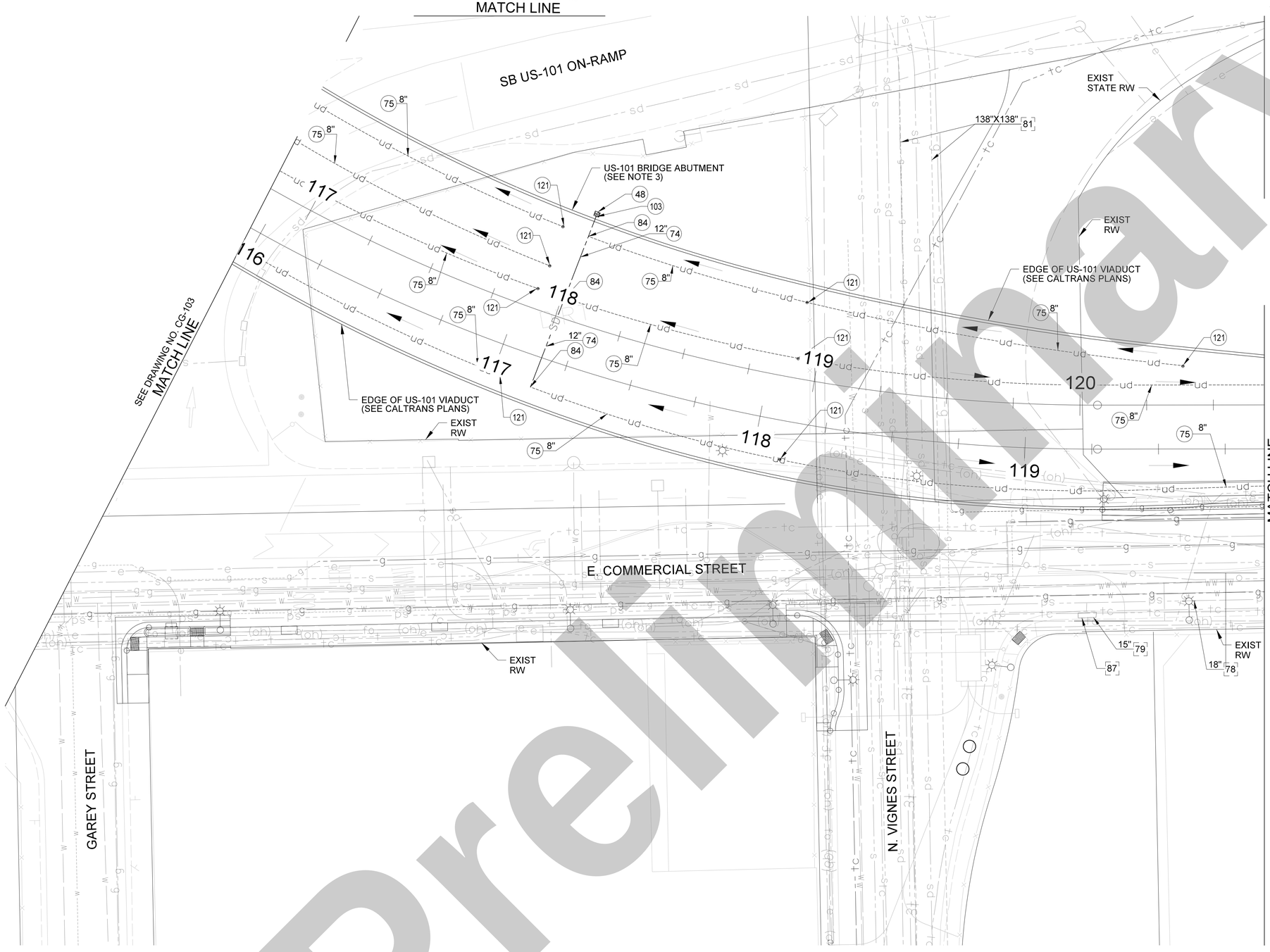

MATCH LINE
SEE DRAWING NO. CG-105

CONSTRUCTION SYMBOLS:

CONSTRUCT	REMODEL EXISTING
EXISTING	REMOVE AND CONSTRUCT
REMOVE	WORK BY OTHERS

CONSTRUCTION NOTES:

48	ROCK SLOPE PROTECTION; SMALL ROCK 5"
74	CORRUGATED METAL PIPE (CMP), SIZE PER PLAN
75	PERFORATED CORRUGATED METAL PIPE (CMP), SIZE PER PLAN
78	VITRIFIED CLAY PIPE (VCP)
79	REINFORCED CONCRETE PIPE (RCP)
81	REINFORCED CONCRETE ARCH (RCA)
84	CONNECTION TO STORM DRAIN WITH FITTINGS NEEDED
87	CURB OPENING CATCH BASIN
103	BRIDGE DECK DOWN DRAIN
121	UNDERDRAIN TERMINAL / INTERMEDIATE CLEANOUT

NOTES:

1. SEE TRACK PLANS FOR DETAILS ON PROPOSED SCRRA TRACKS SHOWN HEREIN.
2. SEE COLA STREET IMPROVEMENT PLANS FOR DETAILS ON PROPOSED IMPROVEMENTS ALONG PUBLIC STREETS.
3. SEE STRUCTURES PLANS FOR DETAILS ON PROPOSED BRIDGES, RETAINING WALLS, AND STORM DRAIN PROTECTION SLAB.
4. SEE CIVIL PLANS FOR SOUTHEAST TURNAROUND AREA FOR DETAILS ON DRAINAGE MODIFICATIONS ASSOCIATED WITH SOUTHEAST TURNAROUND CONSTRUCTION.
5. SEE DRAINAGE AND GRADING PLANS FOR DETAILS OF TRACK UNDERDRAIN NOT ON VIADUCT STRUCTURE.
6. SEE CIVIL PLANS FOR EMERGENCY VEHICLE TURNAROUND FOR DETAILS ON PROPOSED STORM DRAIN.

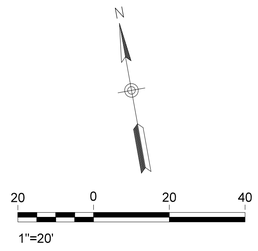

Preliminary

THE PREPARATION OF THIS DRAWING HAS BEEN FINANCED IN PART THROUGH A GRANT FROM THE U.S. DEPARTMENT OF TRANSPORTATION, FEDERAL TRANSIT ADMINISTRATION (FTA), UNDER THE FEDERAL TRANSIT ACT OF 1964, AS AMENDED, AND IN PART BY THE TAXES OF THE CITIZENS OF LOS ANGELES COUNTY AND OF THE STATE OF CALIFORNIA.

REV	DATE	BY	APP	REG NO	EXPIRES	SEAL HOLDER	DESCRIPTION

DESIGNED BY	F. ZHEN
DRAWN BY	V. SANTIAGO
CHECKED BY	M. HARROLD
IN CHARGE	T. KIM
DATE	02/25/2025

Metro
LOS ANGELES COUNTY
METROPOLITAN TRANSPORTATION AUTHORITY

HDR
HDR ENGINEERING
350 S. GRAND AVENUE
SUITE 2900
LOS ANGELES, CA 90071
(213) 239-5800

LINK UNION STATION PROJECT

DRAINAGE PLANS
SHEET 4 OF 9

CONTRACT NO	PS2415-3172
DRAWING NO	CG-104
REV	0
SCALE	1"=20'
SHEET NO	141

Plot Driver=$PLTDRVS$ Pentable=PlotStamp.tbl USER = CCASASOLA 3:40:18 PM 2/20/2025 $FILE$

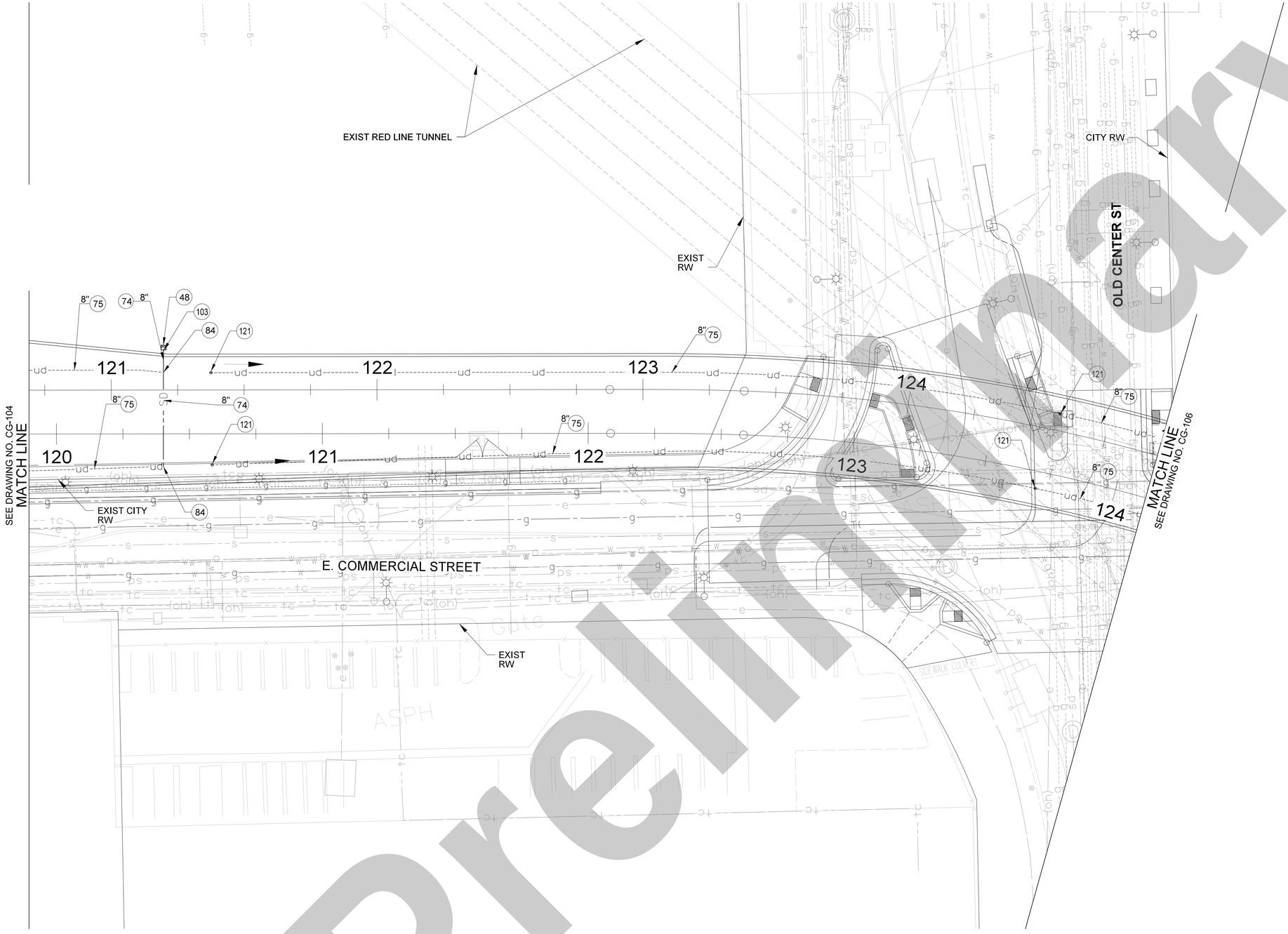

CONSTRUCTION SYMBOLS:

CONSTRUCT	REMODEL EXISTING
EXISTING	REMOVE AND CONSTRUCT
REMOVE	WORK BY OTHERS

CONSTRUCTION NOTES:

48	ROCK SLOPE PROTECTION; SMALL ROCK 5"
74	CORRUGATED METAL PIPE (CMP), SIZE PER PLAN
75	PERFORATED CORRUGATED METAL PIPE (CMP), SIZE PER PLAN
84	CONNECTION TO STORM DRAIN WITH FITTINGS NEEDED
103	BRIDGE DECK DOWN DRAIN
121	UNDERDRAIN TERMINAL / INTERMEDIATE CLEANOUT

NOTES:

1. SEE TRACK PLANS FOR DETAILS ON PROPOSED SCRRA TRACKS SHOWN HEREIN.
2. SEE COLA STREET IMPROVEMENT PLANS FOR DETAILS ON PROPOSED IMPROVEMENTS ALONG PUBLIC STREETS.
3. SEE STRUCTURES PLANS FOR DETAILS ON PROPOSED BRIDGES, RETAINING WALLS, AND STORM DRAIN PROTECTION SLAB.
4. SEE CIVIL PLANS FOR SOUTHEAST TURNAROUND AREA FOR DETAILS ON DRAINAGE MODIFICATIONS ASSOCIATED WITH SOUTHEAST TURNAROUND CONSTRUCTION.
5. SEE DRAINAGE AND GRADING PLANS FOR DETAILS OF TRACK UNDERDRAIN NOT ON VIADUCT STRUCTURE.
6. SEE CIVIL PLANS FOR EMERGENCY VEHICLE TURNAROUND FOR DETAILS ON PROPOSED STORM DRAIN.

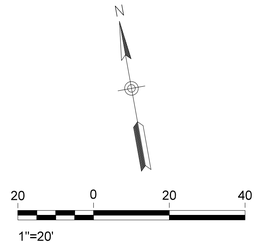

Preliminary

THE PREPARATION OF THIS DRAWING HAS BEEN FINANCED IN PART THROUGH A GRANT FROM THE U.S. DEPARTMENT OF TRANSPORTATION, FEDERAL TRANSIT ADMINISTRATION (FTA), UNDER THE FEDERAL TRANSIT ACT OF 1964, AS AMENDED, AND IN PART BY THE TAXES OF THE CITIZENS OF LOS ANGELES COUNTY AND OF THE STATE OF CALIFORNIA.

REV	DATE	BY	APP	REG NO	EXPIRES	SEAL HOLDER	DESCRIPTION

DESIGNED BY	F. ZHEN
DRAWN BY	V. SANTIAGO
CHECKED BY	M. HARROLD
IN CHARGE	T. KIM
DATE	02/25/2025

Metro
LOS ANGELES COUNTY
METROPOLITAN TRANSPORTATION AUTHORITY
HDR
350 S. GRAND AVENUE
SUITE 2900
LOS ANGELES, CA 90071
(213) 239-5800

LINK UNION STATION PROJECT

DRAINAGE PLANS
SHEET 5 OF 9

CONTRACT NO	PS2415-3172
DRAWING NO	CG-105
REV	0
SCALE	1"=20'
SHEET NO	142

Plot Driver=$PLTDRVS$ Pentable=PlotStamp.tbl USER = CCASASOLA 3:41:27 PM 2/20/2025 $FILE$

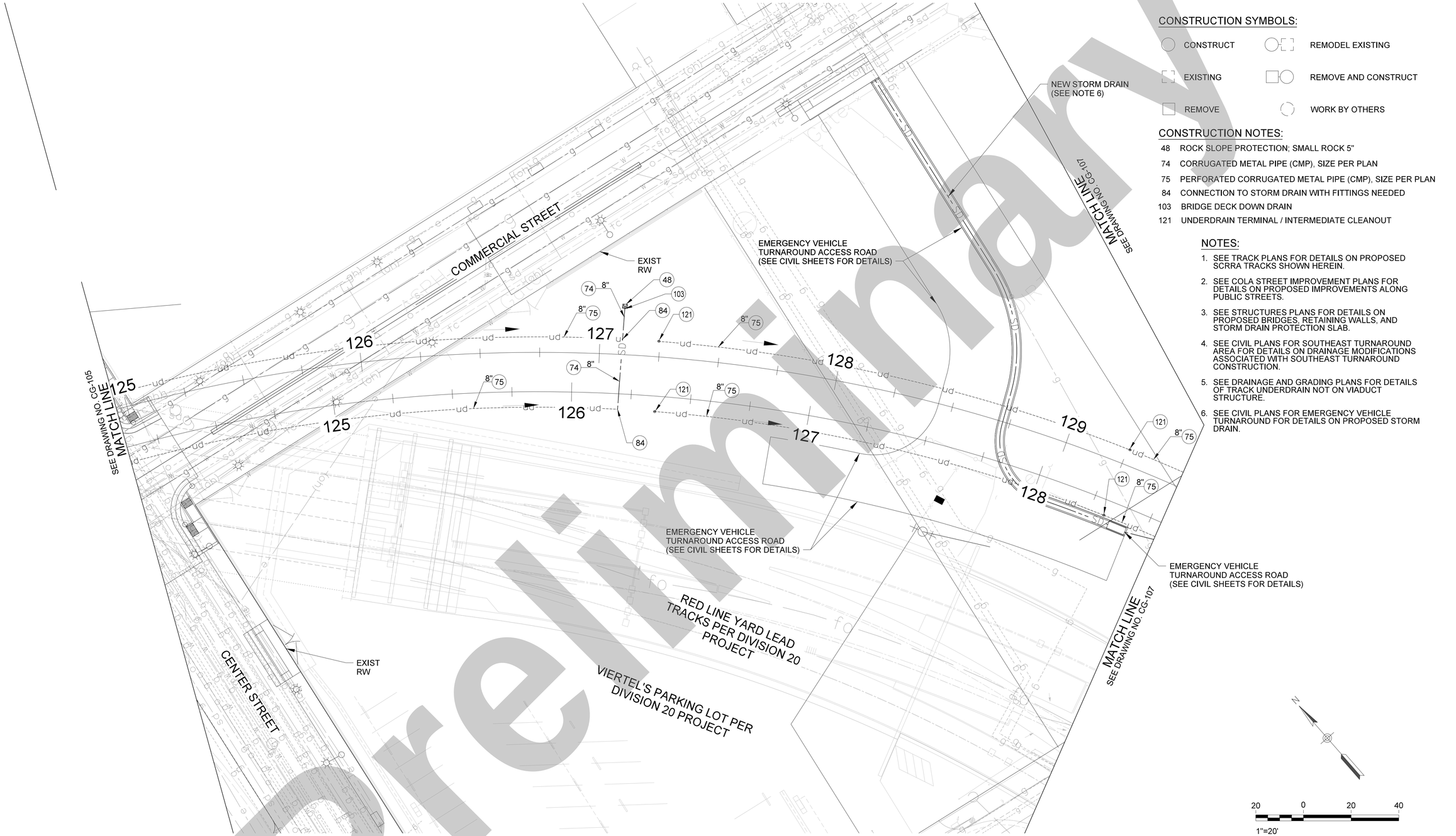

CONSTRUCTION SYMBOLS:

- CONSTRUCT
- EXISTING
- REMOVE
- REMODEL EXISTING
- REMOVE AND CONSTRUCT
- WORK BY OTHERS

CONSTRUCTION NOTES:

48	ROCK SLOPE PROTECTION; SMALL ROCK 5"
74	CORRUGATED METAL PIPE (CMP), SIZE PER PLAN
75	PERFORATED CORRUGATED METAL PIPE (CMP), SIZE PER PLAN
84	CONNECTION TO STORM DRAIN WITH FITTINGS NEEDED
103	BRIDGE DECK DOWN DRAIN
121	UNDERDRAIN TERMINAL / INTERMEDIATE CLEANOUT

NOTES:

1. SEE TRACK PLANS FOR DETAILS ON PROPOSED SCRRA TRACKS SHOWN HEREIN.
2. SEE COLA STREET IMPROVEMENT PLANS FOR DETAILS ON PROPOSED IMPROVEMENTS ALONG PUBLIC STREETS.
3. SEE STRUCTURES PLANS FOR DETAILS ON PROPOSED BRIDGES, RETAINING WALLS, AND STORM DRAIN PROTECTION SLAB.
4. SEE CIVIL PLANS FOR SOUTHEAST TURNAROUND AREA FOR DETAILS ON DRAINAGE MODIFICATIONS ASSOCIATED WITH SOUTHEAST TURNAROUND CONSTRUCTION.
5. SEE DRAINAGE AND GRADING PLANS FOR DETAILS OF TRACK UNDERDRAIN NOT ON VIADUCT STRUCTURE.
6. SEE CIVIL PLANS FOR EMERGENCY VEHICLE TURNAROUND FOR DETAILS ON PROPOSED STORM DRAIN.

Preliminary

THE PREPARATION OF THIS DRAWING HAS BEEN FINANCED IN PART THROUGH A GRANT FROM THE U.S. DEPARTMENT OF TRANSPORTATION, FEDERAL TRANSIT ADMINISTRATION (FTA), UNDER THE FEDERAL TRANSIT ACT OF 1964, AS AMENDED, AND IN PART BY THE TAXES OF THE CITIZENS OF LOS ANGELES COUNTY AND OF THE STATE OF CALIFORNIA.

REV	DATE	BY	APP	REG NO	EXPIRES	SEAL HOLDER	DESCRIPTION

DESIGNED BY	F. ZHEN
DRAWN BY	V. SANTIAGO
CHECKED BY	M. HARROLD
IN CHARGE	T. KIM
DATE	02/25/2025

Metro
LOS ANGELES COUNTY METROPOLITAN TRANSPORTATION AUTHORITY
HDR
350 S. GRAND AVENUE
SUITE 2900
LOS ANGELES, CA 90071
(213) 239-5800

LINK UNION STATION PROJECT

DRAINAGE PLANS
SHEET 6 OF 9

CONTRACT NO	PS2415-3172
DRAWING NO	CG-106
REV	0
SCALE	1"=20'
SHEET NO	143

Plot Driver=$PLTDRVS$ Pentable=PlotStamp.tbl USER = CCASASOLA 3:47:08 PM 2/20/2025 $FILE$

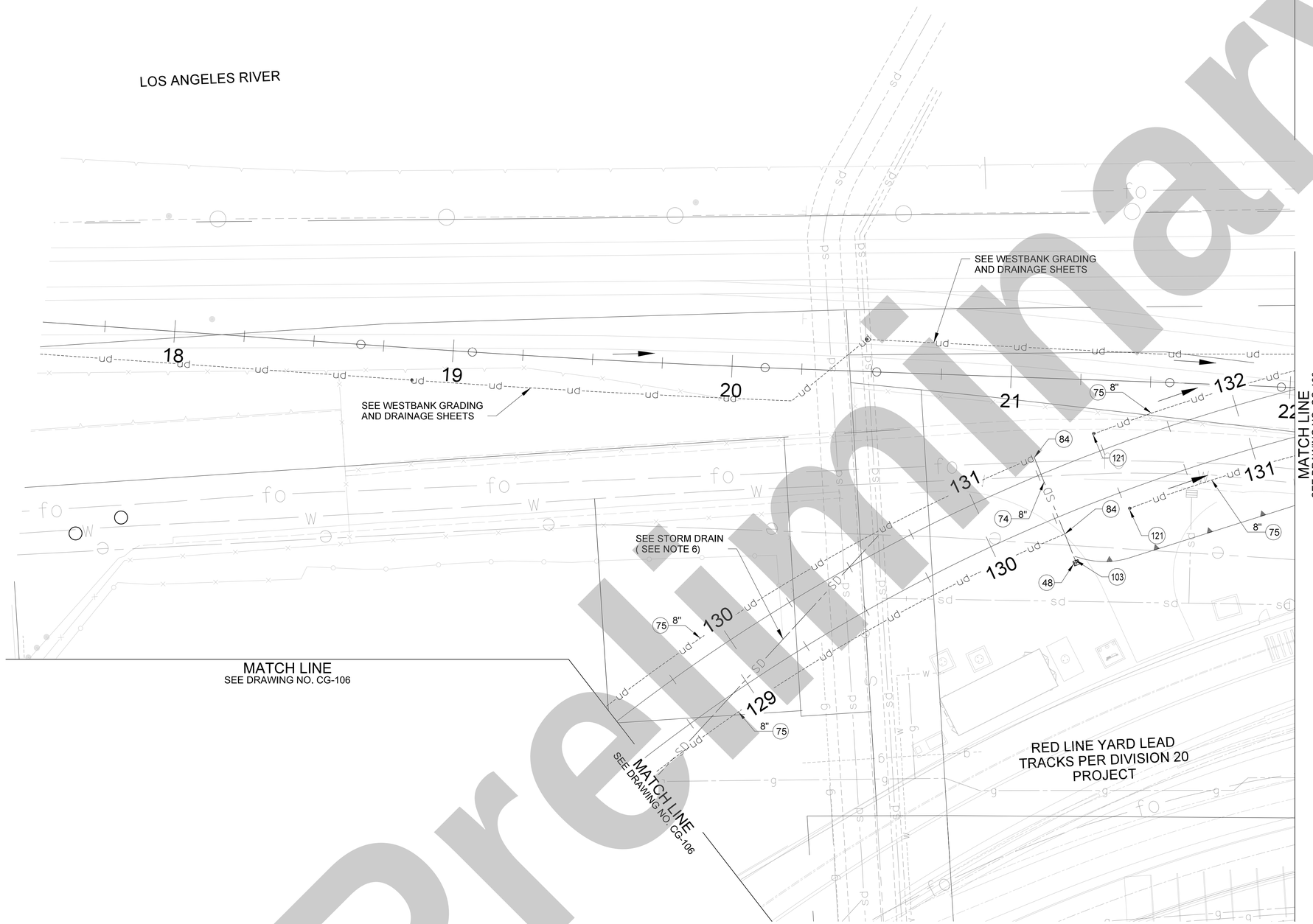

CONSTRUCTION SYMBOLS:

- CONSTRUCT
- EXISTING
- REMOVE
- REMODEL EXISTING
- REMOVE AND CONSTRUCT
- WORK BY OTHERS

CONSTRUCTION NOTES:

48	ROCK SLOPE PROTECTION; SMALL ROCK 5"
74	CORRUGATED METAL PIPE (CMP), SIZE PER PLAN
75	PERFORATED CORRUGATED METAL PIPE (CMP), SIZE PER PLAN
84	CONNECTION TO STORM DRAIN WITH FITTINGS NEEDED
103	BRIDGE DECK DOWN DRAIN
121	UNDERDRAIN TERMINAL / INTERMEDIATE CLEANOUT

NOTES:

1. SEE TRACK PLANS FOR DETAILS ON PROPOSED SCRRA TRACKS SHOWN HEREIN.
2. SEE COLA STREET IMPROVEMENT PLANS FOR DETAILS ON PROPOSED IMPROVEMENTS ALONG PUBLIC STREETS.
3. SEE STRUCTURES PLANS FOR DETAILS ON PROPOSED BRIDGES, RETAINING WALLS, AND STORM DRAIN PROTECTION SLAB.
4. SEE CIVIL PLANS FOR SOUTHEAST TURNAROUND AREA FOR DETAILS ON DRAINAGE MODIFICATIONS ASSOCIATED WITH SOUTHEAST TURNAROUND CONSTRUCTION.
5. SEE DRAINAGE AND GRADING PLANS FOR DETAILS OF TRACK UNDERDRAIN NOT ON VIADUCT STRUCTURE.
6. SEE CIVIL PLANS FOR EMERGENCY VEHICLE TURNAROUND FOR DETAILS ON PROPOSED STORM DRAIN.

Preliminary

THE PREPARATION OF THIS DRAWING HAS BEEN FINANCED IN PART THROUGH A GRANT FROM THE U.S. DEPARTMENT OF TRANSPORTATION, FEDERAL TRANSIT ADMINISTRATION (FTA), UNDER THE FEDERAL TRANSIT ACT OF 1964, AS AMENDED, AND IN PART BY THE TAXES OF THE CITIZENS OF LOS ANGELES COUNTY AND OF THE STATE OF CALIFORNIA.

REV	DATE	BY	APP	REG NO	EXPIRES	SEAL HOLDER	DESCRIPTION

DESIGNED BY F. ZHEN
DRAWN BY V. SANTIAGO
CHECKED BY M. HARROLD
IN CHARGE T. KIM
DATE 02/25/2025

Metro
LOS ANGELES COUNTY METROPOLITAN TRANSPORTATION AUTHORITY
HDR
350 S. GRAND AVENUE
SUITE 2900
LOS ANGELES, CA 90071
(213) 239-5800

LINK UNION STATION PROJECT

DRAINAGE PLANS
SHEET 7 OF 9

CONTRACT NO PS2415-3172
DRAWING NO CG-107
REV 0
SCALE 1"=20'
SHEET NO 144

Plot Driver=$PLTDRVS$ Pentable=PlotStamp.tbl USER = CCASASOLA 2/20/2025 2:40:59 PM $FILE$

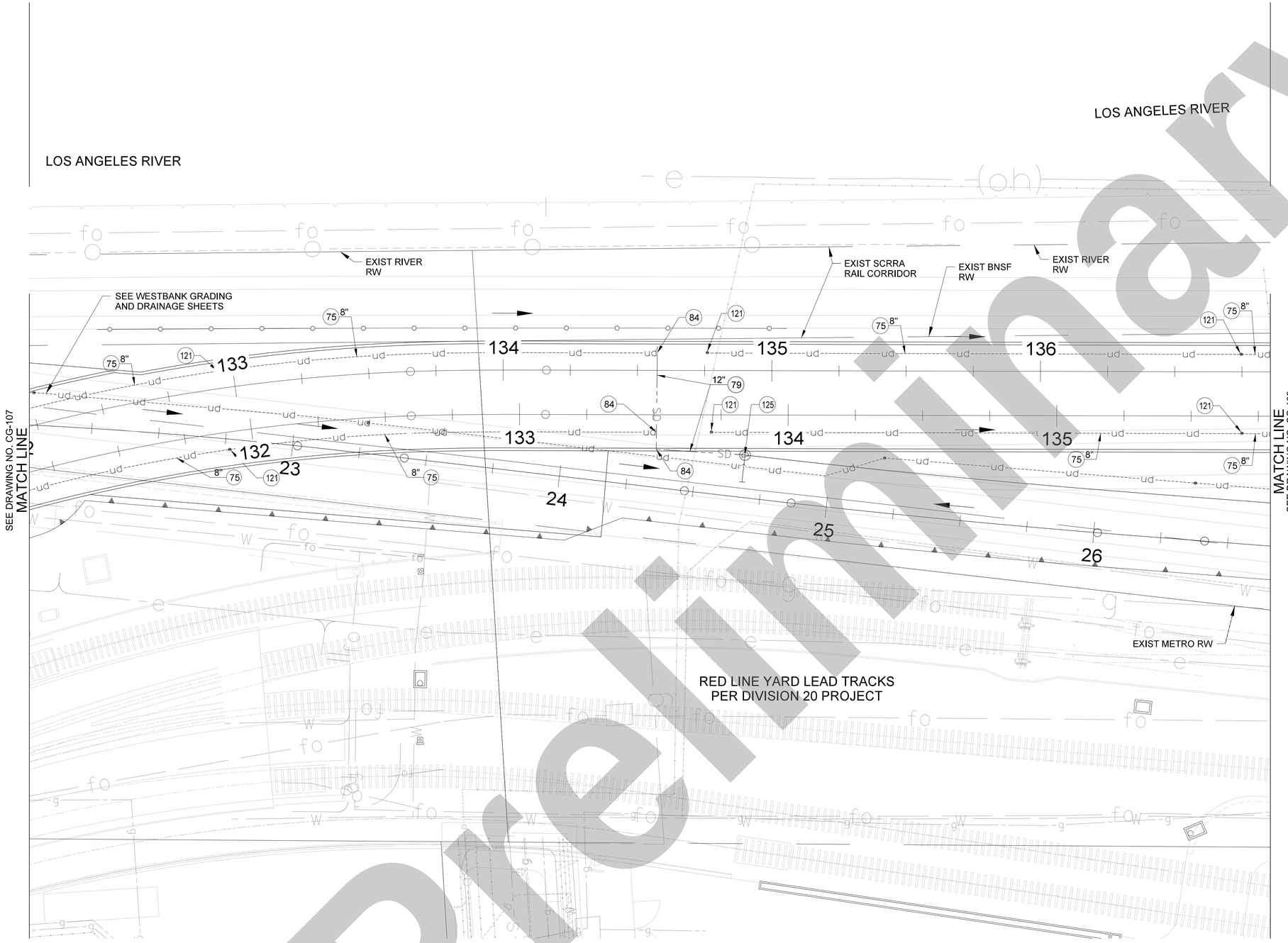

CONSTRUCTION SYMBOLS:

- CONSTRUCT
- EXISTING
- REMOVE
- REMODEL EXISTING
- REMOVE AND CONSTRUCT
- WORK BY OTHERS

CONSTRUCTION NOTES:

75	PERFORATED CORRUGATED METAL PIPE (CMP), SIZE PER PLAN
79	REINFORCED CONCRETE PIPE (RCP)
84	CONNECTION TO STORM DRAIN WITH FITTINGS NEEDED
121	UNDERDRAIN TERMINAL / INTERMEDIATE CLEANOUT
125	CONNECTION TO STORM DRAIN MANHOLE

NOTES:

1. SEE TRACK PLANS FOR DETAILS ON PROPOSED SCRRA TRACKS SHOWN HEREIN.
2. SEE COLA STREET IMPROVEMENT PLANS FOR DETAILS ON PROPOSED IMPROVEMENTS ALONG PUBLIC STREETS.
3. SEE STRUCTURES PLANS FOR DETAILS ON PROPOSED BRIDGES, RETAINING WALLS, AND STORM DRAIN PROTECTION SLAB.
4. SEE CIVIL PLANS FOR SOUTHEAST TURNAROUND AREA FOR DETAILS ON DRAINAGE MODIFICATIONS ASSOCIATED WITH SOUTHEAST TURNAROUND CONSTRUCTION.
5. SEE DRAINAGE AND GRADING PLANS FOR DETAILS OF TRACK UNDERDRAIN NOT ON VIADUCT STRUCTURE.
6. SEE CIVIL PLANS FOR EMERGENCY VEHICLE TURNAROUND FOR DETAILS ON PROPOSED STORM DRAIN.

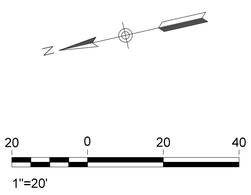

Preliminary

THE PREPARATION OF THIS DRAWING HAS BEEN FINANCED IN PART THROUGH A GRANT FROM THE U.S. DEPARTMENT OF TRANSPORTATION, FEDERAL TRANSIT ADMINISTRATION (FTA), UNDER THE FEDERAL TRANSIT ACT OF 1964, AS AMENDED, AND IN PART BY THE TAXES OF THE CITIZENS OF LOS ANGELES COUNTY AND OF THE STATE OF CALIFORNIA.

REV	DATE	BY	APP	REG NO	EXPIRES	SEAL HOLDER	DESCRIPTION

DESIGNED BY: F. ZHEN
DRAWN BY: V. SANTIAGO
CHECKED BY: M. HARROLD
IN CHARGE: T. KIM
DATE: 02/25/2025

Metro
LOS ANGELES COUNTY
METROPOLITAN TRANSPORTATION AUTHORITY
HDR
350 S. GRAND AVENUE
SUITE 2900
LOS ANGELES, CA 90071
(213) 239-5800

LINK UNION STATION PROJECT

DRAINAGE PLANS
SHEET 8 OF 9

CONTRACT NO: PS2415-3172
DRAWING NO: CG-108
REV: 0
SCALE: 1"=20'
SHEET NO: 145

Plot Driver=$PLTDRVS$ Pentable=PlotStamp.tbl USER = CCASASOLA 2:41:35 PM 2/20/2025 $FILE$

LOS ANGELES RIVER

SEE WESTBANK GRADING AND DRAINAGE SHEETS

℄ PROPOSED SCRRA TRACKS (SEE NOTE 1)

SEE DRAWING NO. CG-108 FOR MATCH LINE

EDGE OF AMTRAK YARD LEAD BRIDGE

℄ AMTRAK YARD LEAD (SEE NOTE 1)

EXIST METRO RW

EXIST BNSF STORAGE TRACKS

RED LINE YARD LEAD TRACKS PER DIVISION 20 PROJECT

CONSTRUCTION SYMBOLS:

- CONSTRUCT
- EXISTING
- REMOVE
- REMODEL EXISTING
- REMOVE AND CONSTRUCT
- WORK BY OTHERS

CONSTRUCTION NOTES:

75 PERFORATED CORRUGATED METAL PIPE (CMP), SIZE PER PLAN

NOTES:

1. SEE TRACK PLANS FOR DETAILS ON PROPOSED SCRRA TRACKS SHOWN HEREIN.
2. SEE COLA STREET IMPROVEMENT PLANS FOR DETAILS ON PROPOSED IMPROVEMENTS ALONG PUBLIC STREETS.
3. SEE STRUCTURES PLANS FOR DETAILS ON PROPOSED BRIDGES, RETAINING WALLS, AND STORM DRAIN PROTECTION SLAB.
4. SEE CIVIL PLANS FOR SOUTHEAST TURNAROUND AREA FOR DETAILS ON DRAINAGE MODIFICATIONS ASSOCIATED WITH SOUTHEAST TURNAROUND CONSTRUCTION.
5. SEE DRAINAGE AND GRADING PLANS FOR DETAILS OF TRACK UNDERDRAIN NOT ON VIADUCT STRUCTURE.
6. SEE CIVIL PLANS FOR EMERGENCY VEHICLE TURNAROUND FOR DETAILS ON PROPOSED STORM DRAIN.

20 0 20 40
1"=20'

Preliminary

THE PREPARATION OF THIS DRAWING HAS BEEN FINANCED IN PART THROUGH A GRANT FROM THE U.S. DEPARTMENT OF TRANSPORTATION, FEDERAL TRANSIT ADMINISTRATION (FTA), UNDER THE FEDERAL TRANSIT ACT OF 1964, AS AMENDED, AND IN PART BY THE TAXES OF THE CITIZENS OF LOS ANGELES COUNTY AND OF THE STATE OF CALIFORNIA.

REV	DATE	BY	APP	REG NO	EXPIRES	SEAL HOLDER	DESCRIPTION

DESIGNED BY F. ZHEN
DRAWN BY V. SANTIAGO
CHECKED BY M. HARROLD
IN CHARGE T. KIM
DATE 02/25/2025

Metro
LOS ANGELES COUNTY
METROPOLITAN TRANSPORTATION AUTHORITY

HDR
350 S. GRAND AVENUE
SUITE 2900
LOS ANGELES, CA 90071
(213) 239-5800

LINK UNION STATION PROJECT

DRAINAGE PLANS
SHEET 9 OF 9

CONTRACT NO PS2415-3172
DRAWING NO CG-109
REV 0
SCALE 1"=20'
SHEET NO 146

Plot Driver=$PLTDRVS$ Pentable=PlotStamp.tbl USER = CCASASOLA 3:26:49 PM 2/20/2025 $FILE$

(THIS PAGE INTENTIONALLY LEFT BLANK)

Build Alternative Design Option Phase B - Plan Sheet

(THIS PAGE INTENTIONALLY LEFT BLANK)

TO CP CHAVEZ

TO CP OLYMPIC

LOS ANGELES RIVER

LOS ANGELES RIVER

WILLIAM MEAD HOMES

CESAR E CHAVEZ AVENUE

US-101

CENTER STREET

END PHASE B TRACKWORK
JOIN PHASE A IMPROVEMENTS

VIGNES STREET

COMMERCIAL STREET

PHASE B TRACK AND LAUS IMPROVEMENTS.
4 RAISED RUN-THROUGH PLATFORMS

6TH LEAD TRACK

RUN THROUGH BRIDGE DECK
AND SUBSTRUCTURE
CONSTRUCTED IN PHASE A

8 RUN-THROUGH TRACKS

RECONSTRUCT PORTION OF
CESAR CHAVEZ BRIDGE

LAUS

100-FOOT-WIDE EXPANDED
PASSAGEWAY

N

200 0 200 400

1"=200'

PLAN

LEGEND:

- CONSTRUCTED IN PHASE B (FULL BUILD OUT CONDITION)
- CONSTRUCTED IN PHASE A (INTERIM CONDITION)
- EXISTING CONDITION TO REMAIN IN FULL BUILD OUT CONDITION

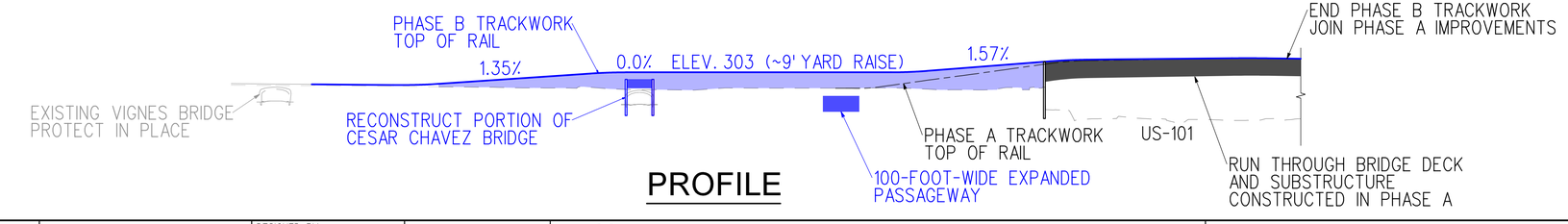

PROFILE

THE PREPARATION OF THIS DRAWING HAS BEEN FINANCED IN PART THROUGH A GRANT FROM THE U.S. DEPARTMENT OF TRANSPORTATION, FEDERAL TRANSIT ADMINISTRATION (FTA), UNDER THE FEDERAL TRANSIT ACT OF 1964, AS AMENDED, AND IN PART BY THE TAXES OF THE CITIZENS OF LOS ANGELES COUNTY AND OF THE STATE OF CALIFORNIA.

REV	DATE	BY	APP	REG NO	EXPIRES	SEAL HOLDER	DESCRIPTION

DESIGNED BY

DRAWN BY

CHECKED BY

IN CHARGE

DATE 08/27/25

Metro

LOS ANGELES COUNTY
METROPOLITAN TRANSPORTATION AUTHORITY

HDR

HDR ENGINEERING

350 S. GRAND AVENUE
SUITE 2900
LOS ANGELES, CA 90071
(213) 239-5800

LINK UNION STATION PROJECT

BUILD ALTERNATIVE
DESIGN OPTION
FULL BUILD OUT CONDITION

CONTRACT NO PS2415-3172

DRAWING NO | REV

SCALE HORIZ: 1"=200'
VERT: NTS

SHEET NO

Plot Driver=$PLTDRVS$ Pentable=PlotStamp.tbl USER = ZMACDONE 10:16:23 AM 9/10/2025 $FILE$

(THIS PAGE INTENTIONALLY LEFT BLANK)

Malabar Yard Railroad Improvements Design Option 1 - Index and Plan Sheets

(THIS PAGE INTENTIONALLY LEFT BLANK)

MALABAR YARD DESIGN OPTION 1 PLAN SHEETS		
SHEET NO.	DRAWING NO.	DRAWING TITLE
1	GN01	COVER SHEET
2	ROW01	RIGHT-OF-WAY IMPACTS
3	ROW02	RIGHT-OF-WAY IMPACTS
4	UT01	BNSF LAJ CONNECTOR EXISTING UTILITIES
5	UT02	MALABAR YARD/49TH ST CLOSURE MALABAR YARD/49TH ST CLOSURE EXISTING UTILITIES
6	SD01	EXISTING/PROPOSED DRAINAGE BNSF LAJ CONNECTOR
7	SD02	EXISTING/PROPOSED DRAINAGE MALABAR YARD/49TH ST CLOSURE
8	P01	TRACK PLAN BNSF LAJ CONNECTOR
9	P02	BNSF LAJ CONNECTOR CIVIL PLAN
10	RD01	MALABAR YARD/49TH ST CLOSURE GRADE CROSSING
11	RD02	PACIFIC BLVD AND 46TH STREET GRADE CROSSING
12	RD03	SEVILLE AVENUE AND 46TH STREET GRADE CROSSING
13	TS01	RAIL TYPICAL SECTIONS
14	TS02	CIVIL TYPICAL SECTIONS
15	SS01	BNSF LAJ CONNECTOR STRIPING AND SIGNAGE
16	SS02	MALABAR YARD/49TH ST CLOSURE STRIPING AND SIGNAGE

HARBOR AND SAN BERNARDINO SUBDIVISION
LINE SEGMENT 7604/7665

MALABAR YARD / 49TH STREET CLOSURE AND LAJ CONNECTOR BETWEEN TRACKS 7604-2750 AND 7665-1010 (REFERENCE LOCATION: MP1.3, HARBOR SUB)



PROJECT LOCATION
NOT TO SCALE



LOS ANGELES, CA

PROJECT AREA
NOT TO SCALE

10% DESIGN SUBMITTAL
JUNE 30, 2020

NOT FOR CONSTRUCTION

SERIES GN01 OF GN04

Conceptual

$USER$
$TIME$
PLOT DATE: $DATE$

HDR Engineering, Inc.
2280 Market Street, Suite 100
Riverside, CA 92501-2110
951-320-7300
www.hdrinc.com

ISSUE	DATE	DESCRIPTION
1	06/30/20	10% CONCEPTUAL PLANS

BNSF CALL BEFORE YOU DIG # 1-800-422-4133

Underground Service Alert
Call 811
Before You Dig
TWO WORKING DAYS BEFORE YOU DIG

BNSF RAILWAY
HARBOR AND SAN BERNARDINO SUBDIVISION

DESIGNED:	HDR-BR
CHECKED:	HDR-EC
DRAWN:	HDR-WS
CHECKED:	HDR-JR
DATE:	JUNE 30, 2020
AUTH:	
LINE SEG:	7604/7665

BNSF RAILWAY - HARBOR AND SAN BERNARDINO
SUBDIVISION - BETWEEN TRACKS 7604-2750 AND 7665-1010

COVER SHEET

FILENAME	16542-MALA-G-GN01.dgn
SCALE	(FULL-SIZE) - AS NOTED

SHEET 1 OF 16

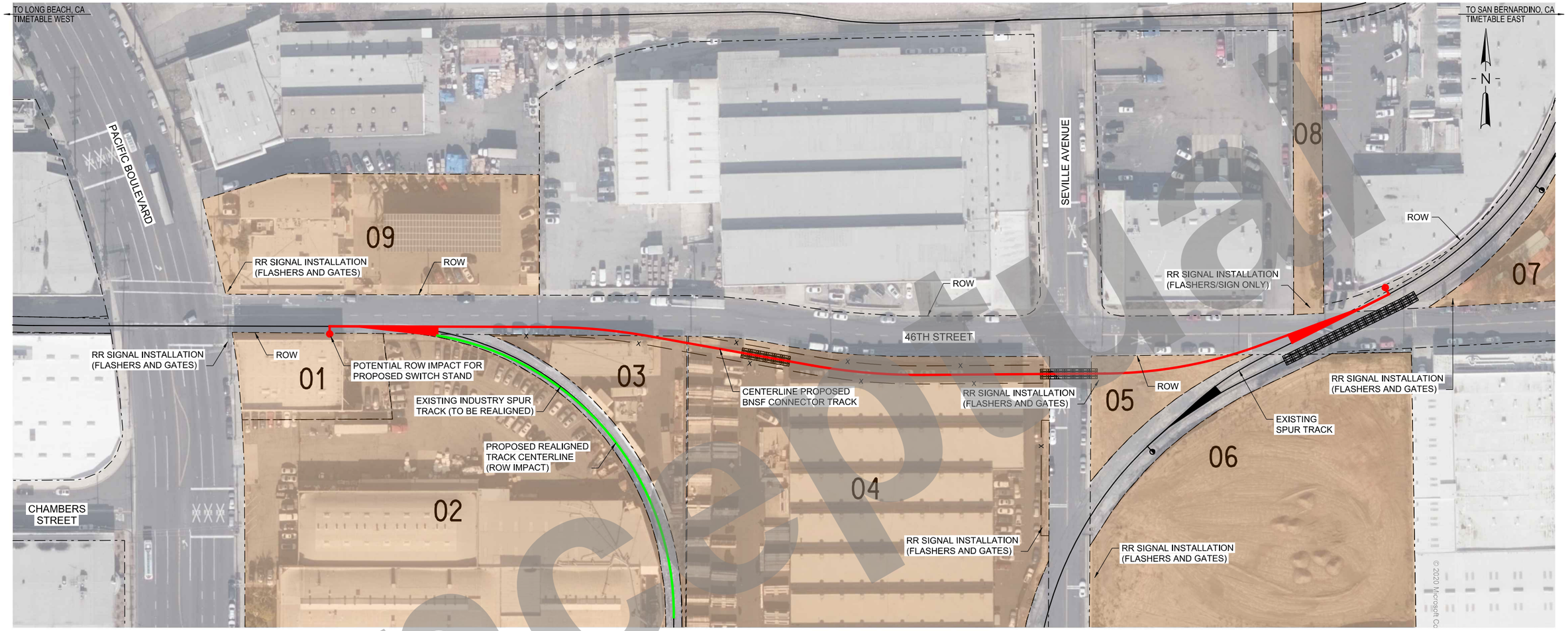

RIGHT-OF-WAY IMPACTS (ESTIMATED)		
ID	AIN	OWNER
01	6308-004-011	JONES, JEREMY
02	6308-004-012	GUERRA, JOSE & LIDIA
03	6308-004-012	GUERRA, JOSE & LIDIA
04	6308-004-013	ALPINE LEONIS LLC
05	6308-002-017	PBR SEVILLE LLC
06	6308-002-016	PBR SEVILLE LLC
07	6308-001-023	MCI PROPERTIES LLC
08	6308-001-026	CHAHAL WHITE LLC
09	6308-005-007	FLORMAN FAMILY
–	--	CITY VERNON

LEGEND:

EXISTING ADJACENT AND/OR IMPACTED RIGHTS-OF-WAY (OUTSIDE OF BNSF ROW)

NOTES:

1. FOR LOCATIONS OF ALL PROPOSED RR SIGNALS, SIGNAGE, FLASHERS, AND GATE ARMS SEE CIVIL AND TRACK PLANS
2. STREET TRAFFIC SIGNALS, AND ANY ASSOCIATED ROW IMPACTS, NOT SHOWN FOR CLARITY
3. PROPOSED/REPLACED ROW GATES, NOT SHOWN FOR CLARITY
4. FOR LOCATIONS OF ALL PROPOSED CITY OF VERNON STREET RIGHT-OF-WAY IMPROVEMENTS (MEDIANS, SIGNAGE, ETC...) SEE CIVIL AND TRACK PLANS

50 25 0 50 100
SCALE: 1" = 50'

NOT FOR CONSTRUCTION

SERIES ROW01 OF ROW02

Concept

PLOT DATE: 7/1/2020 2:27:01 PM WSTEBOK

HDR Engineering, Inc.
2280 Market Street, Suite 100
Riverside, CA 92501-2110
951-320-7300
www.hdrinc.com

ISSUE	DATE	DESCRIPTION
1	06/30/20	10% CONCEPTUAL PLANS

BNSF CALL BEFORE YOU DIG # 1-800-422-4133

Underground Service Alert
Call 811
Before You Dig
TWO WORKING DAYS BEFORE YOU DIG

BNSF RAILWAY

HARBOR AND SAN BERNARDINO SUBDIVISION

DESIGNED:	HDR-BR
CHECKED:	HDR-EC
DRAWN:	HDR-WS
CHECKED:	HDR-JR
DATE:	JUNE 30, 2020
AUTH:	
LINE SEG:	7604/7665

BNSF RAILWAY - HARBOR AND SAN BERNARDINO
SUBDIVISION - BETWEEN TRACKS 7604-2750 AND 7665-1010

RIGHT-OF-WAY IMPACTS

FILENAME	16542_LAJ-C-ROW01.dgn
SCALE	(FULL-SIZE) - AS NOTED

SHEET 2 OF 16

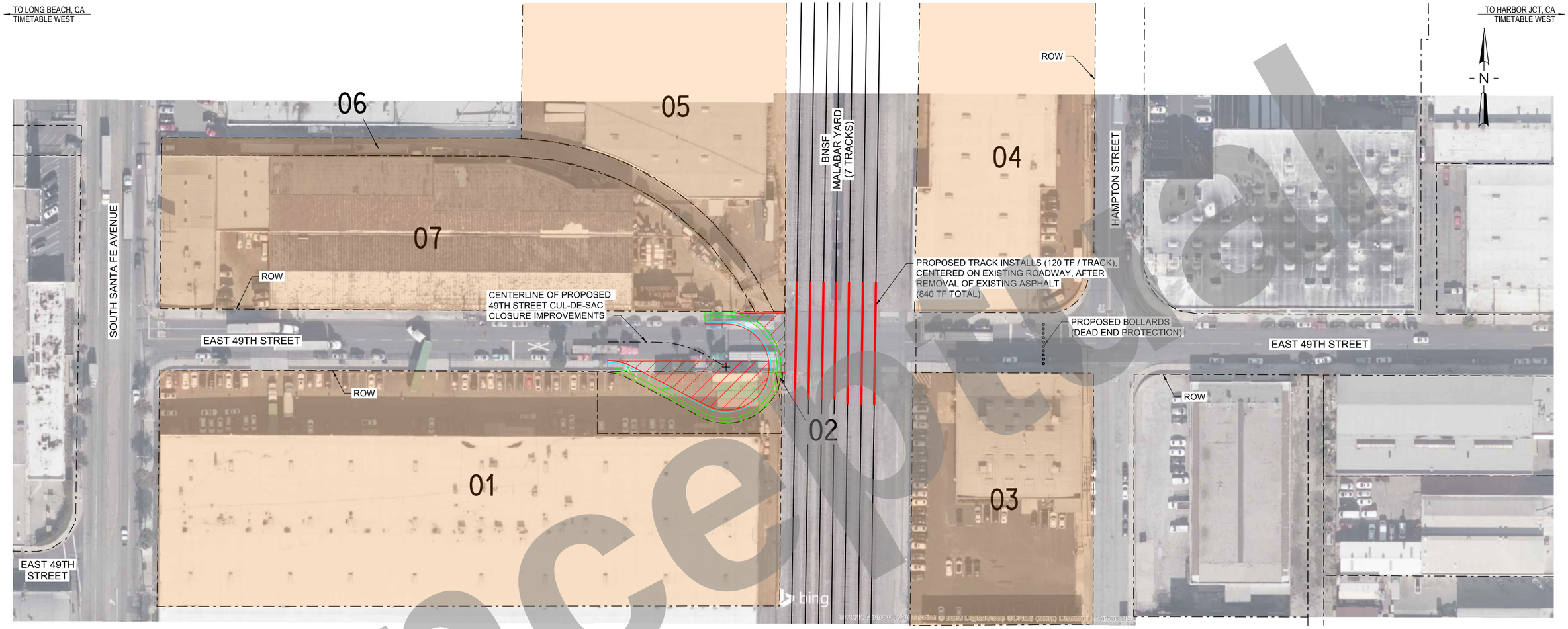

RIGHT-OF-WAY IMPACTS (ESTIMATED)		
ID	AIN	OWNER
01	6308-011-010	KB NEW YORK BH LLC
02	6308-011-901	LACMTA
03	6308-010-037	2516 MILANI LLC
04	6308-009-030	FINKEL-HAMPTON LLC
05	6308-007-012	GREAT AMERICAN HOLDINGS INV LLC
06	6308-007-020	GREAT AMERICAN HOLDINGS INV LLC
07	6308-007-006	MELIDO, MICHAEL
	–	CITY VERNON

NOTES:

1. FOR LOCATIONS OF ALL PROPOSED CITY OF VERNON STREET RIGHT-OF-WAY IMPROVEMENTS (SIDEWALKS, SIGNAGE, ETC...) SEE CIVIL PLANS
2. PROPOSED/REPLACED ROW GATES (TO BE DETERMINED), NOT SHOWN FOR CLARITY
3. STREET TRAFFIC SIGNALS (TO BE DETERMINED), AND ANY ASSOCIATED ROW IMPACTS, NOT SHOWN FOR CLARITY

LEGEND:

EXISTING ADJACENT AND/OR IMPACTED RIGHTS-OF-WAY (OUTSIDE OF BNSF ROW)

50 25 0 50 100
SCALE: 1" = 50'

NOT FOR CONSTRUCTION

SERIES
ROW02 OF ROW02

Concept

PLOT DATE: 7/1/2020 2:28:13 PM WSTEBOK

HDR Engineering, Inc.
2280 Market Street, Suite 100
Riverside, CA 92501-2110
951-320-7300
www.hdrinc.com

ISSUE	DATE	DESCRIPTION
1	06/30/20	10% CONCEPTUAL PLANS

BNSF CALL BEFORE YOU DIG # 1-800-422-4133

Underground Service Alert
Call 811
Before You Dig
TWO WORKING DAYS BEFORE YOU DIG

BNSF RAILWAY

HARBOR AND SAN BERNARDINO SUBDIVISION

DESIGNED:	HDR-BR
CHECKED:	HDR-EC
DRAWN:	HDR-WS
CHECKED:	HDR-JR
DATE:	JUNE 30, 2020
AUTH:	
LINE SEG:	7604/7665

BNSF RAILWAY - HARBOR AND SAN BERNARDINO SUBDIVISION - BETWEEN TRACKS 7604-2750 AND 7665-1010

RIGHT-OF-WAY IMPACTS

FILENAME	16542_MALA-C-ROW02.dgn	SHEET
SCALE	(FULL-SIZE) - AS NOTED	3 OF 16

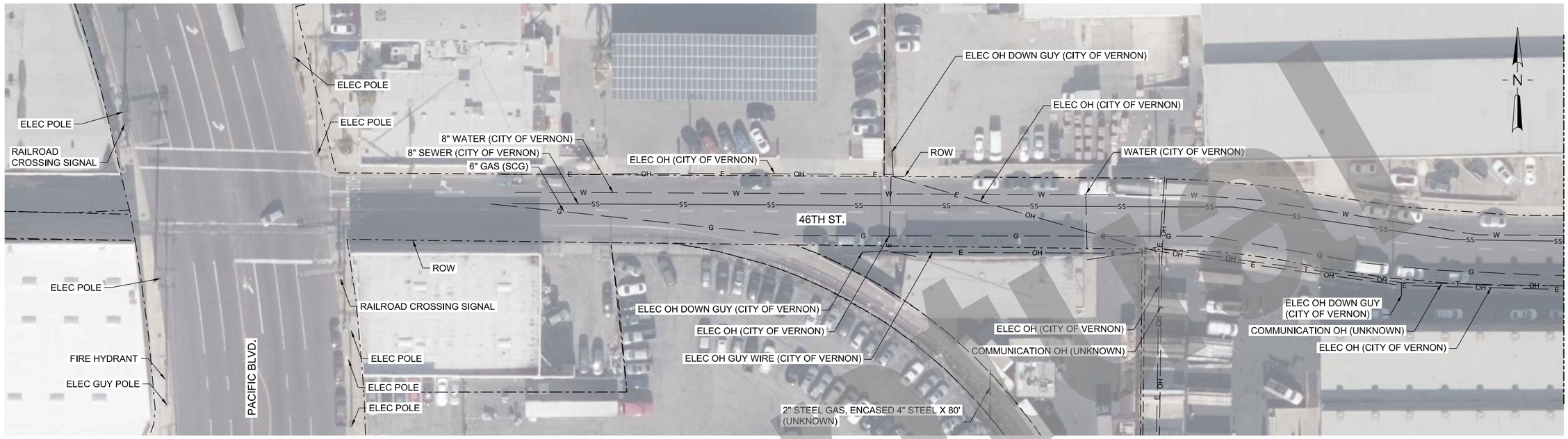

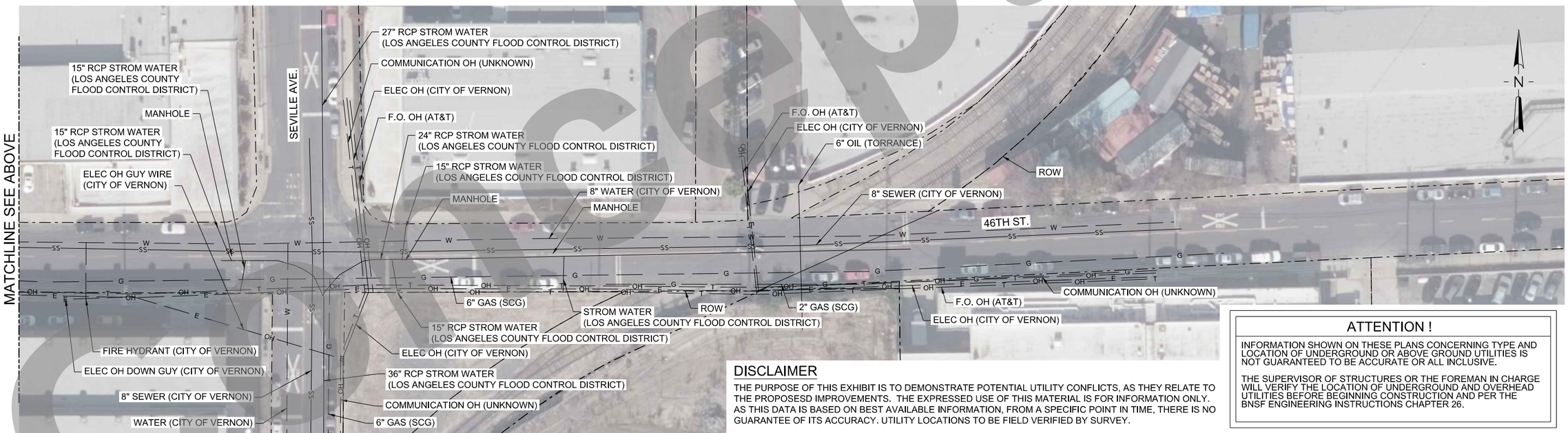

DISCLAIMER

THE PURPOSE OF THIS EXHIBIT IS TO DEMONSTRATE POTENTIAL UTILITY CONFLICTS, AS THEY RELATE TO THE PROPOSESD IMPROVEMENTS. THE EXPRESSED USE OF THIS MATERIAL IS FOR INFORMATION ONLY. AS THIS DATA IS BASED ON BEST AVAILABLE INFORMATION, FROM A SPECIFIC POINT IN TIME, THERE IS NO GUARANTEE OF ITS ACCURACY. UTILITY LOCATIONS TO BE FIELD VERIFIED BY SURVEY.

ATTENTION !

INFORMATION SHOWN ON THESE PLANS CONCERNING TYPE AND LOCATION OF UNDERGROUND OR ABOVE GROUND UTILITIES IS NOT GUARANTEED TO BE ACCURATE OR ALL INCLUSIVE.

THE SUPERVISOR OF STRUCTURES OR THE FOREMAN IN CHARGE WILL VERIFY THE LOCATION OF UNDERGROUND AND OVERHEAD UTILITIES BEFORE BEGINNING CONSTRUCTION AND PER THE BNSF ENGINEERING INSTRUCTIONS CHAPTER 26.

30 15 0 30 60
SCALE: 1" = 30'

NOT FOR CONSTRUCTION

SERIES UT01 OF UT02

PLOT DATE: 6/30/2020 4:53:11 PM WSTEBOK

HDR Engineering, Inc.
2280 Market Street, Suite 100
Riverside, CA 92501-2110
951-320-7300
www.hdrinc.com

ISSUE	DATE	DESCRIPTION
1	06/30/20	10% CONCEPTUAL PLANS

BNSF CALL BEFORE YOU DIG # 1-800-422-4133

Underground Service Alert
Call 811
Before You Dig
TWO WORKING DAYS BEFORE YOU DIG

BNSF RAILWAY

HARBOR AND SAN BERNARDINO SUBDIVISION

DESIGNED:	HDR-BK
CHECKED:	HDR-BK
DRAWN:	HDR-JS
CHECKED:	HDR-EC
DATE:	JUNE 30, 2020
AUTH:	
LINE SEG:	7604/7665

BNSF RAILWAY - HARBOR AND SAN BERNARDINO SUBDIVISION - BETWEEN TRACKS 7604-2750 AND 7665-1010

BNSF LAJ CONNECTOR EXISTING UTILITIES

FILENAME	LAJ-U-UT01.dgn
SCALE	(FULL-SIZE) - AS NOTED

SHEET 4 OF 16

Concept

DISCLAIMER

THE PURPOSE OF THIS EXHIBIT IS TO DEMONSTRATE POTENTIAL UTILITY CONFLICTS, AS THEY RELATE TO THE PROPOSESD IMPROVEMENTS. THE EXPRESSED USE OF THIS MATERIAL IS FOR INFORMATION ONLY. AS THIS DATA IS BASED ON BEST AVAILABLE INFORMATION, FROM A SPECIFIC POINT IN TIME, THERE IS NO GUARANTEE OF ITS ACCURACY. UTILITY LOCATIONS TO BE FIELD VERIFIED BY SURVEY.

ATTENTION !

INFORMATION SHOWN ON THESE PLANS CONCERNING TYPE AND LOCATION OF UNDERGROUND OR ABOVE GROUND UTILITIES IS NOT GUARANTEED TO BE ACCURATE OR ALL INCLUSIVE.

THE SUPERVISOR OF STRUCTURES OR THE FOREMAN IN CHARGE WILL VERIFY THE LOCATION OF UNDERGROUND AND OVERHEAD UTILITIES BEFORE BEGINNING CONSTRUCTION AND PER THE BNSF ENGINEERING INSTRUCTIONS CHAPTER 26.

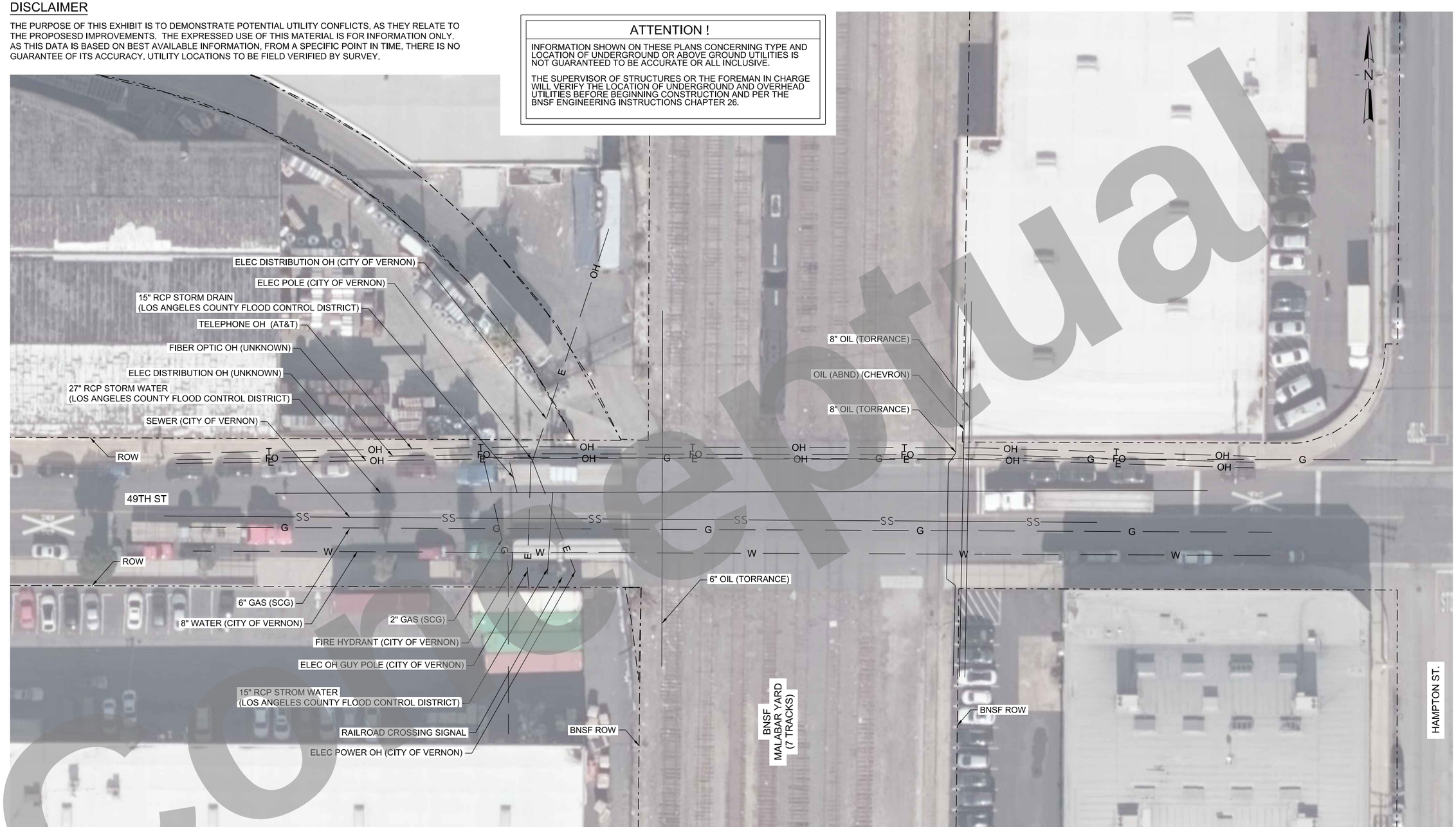

20 10 0 20 40
SCALE: 1" = 20'

NOT FOR CONSTRUCTION

SERIES UT02 OF UT02

HDR Engineering, Inc.
2280 Market Street, Suite 100
Riverside, CA 92501-2110
951-320-7500
www.hdrinc.com

ISSUE	DATE	DESCRIPTION
1	06/30/20	10% CONCEPTUAL PLANS

BNSF CALL BEFORE YOU DIG # 1-800-422-4133

Underground Service Alert
Call 811
Before You Dig
TWO WORKING DAYS BEFORE YOU DIG

BNSF RAILWAY

HARBOR AND SAN BERNARDINO SUBDIVISION

DESIGNED:	HDR-BK
CHECKED:	HDR-BK
DRAWN:	HDR-IS
CHECKED:	HDR-EC
DATE:	JUNE 30, 2020
AUTH:	
LINE SEG:	7604/7665

BNSF RAILWAY - HARBOR AND SAN BERNARDINO
SUBDIVISION - BETWEEN TRACKS 7604-2750 AND 7665-1010

MALABAR YARD/49TH ST CLOSURE EXISTING UTILITIES

FILENAME	MALA-U-UT02.dgn
SCALE	(FULL-SIZE) - AS NOTED

SHEET 5 OF 16

PLOT DATE: 6/30/2020 4:54:00 PM WSTEBOK

conceptual



© 2020 Microsoft Corporation © 2020

NOTES:

1. EXISTING DRAINAGE FACILITIES ARE SHOWN IN COLOR BLUE; PROPOSED DRAINAGE FACILITIES ARE SHOWN IN COLOR RED.
2. SEE CIVIL AND TRACK PLANS FOR PROPOSED CIVIL AND RR IMPROVEMENTS.
3. SEE UTILITY PLANS FOR EXISTING UTILITIES.

50 25 0 50 100
SCALE: 1" = 50'

NOT FOR CONSTRUCTION

SERIES SD01 OF SD02

HDR Engineering, Inc.
2280 Market Street, Suite 100
Riverside, CA 92501-2110
951-320-7300
www.hdrinc.com

ISSUE	DATE	DESCRIPTION
1	06/30/20	10% CONCEPTUAL PLANS

BNSF CALL BEFORE YOU DIG # 1-800-422-4133

Underground Service Alert
Call 811
Before You Dig
TWO WORKING DAYS BEFORE YOU DIG

HARBOR AND SAN BERNARDINO SUBDIVISION

DESIGNED:	HDR-FZ
CHECKED:	HDR-LV
DRAWN:	HDR-AA
CHECKED:	HDR-EC
DATE:	JUNE 30, 2020
AUTH:	
LINE SEG:	7604/7665

BNSF RAILWAY - HARBOR AND SAN BERNARDINO
SUBDIVISION - BETWEEN TRACKS 7604-2750 AND 7665-1010

BNSF LAJ CONNECTOR EXISTING/PROPOSED DRAINAGE

FILENAME	LAJ-SD-01.dgn
SCALE	(FULL-SIZE) - AS NOTED

SHEET 6 OF 16

PLOT DATE: 6/30/2020 5:31:31 PM WSTEBOK

Concept



NOTES:

1. EXISTING DRAINAGE FACILITIES ARE SHOWN IN COLOR BLUE; PROPOSED DRAINAGE FACILITIES ARE SHOWN IN COLOR RED.
2. SEE CIVIL AND TRACK PLANS FOR PROPOSED CIVIL AND RR IMPROVEMENTS.
3. SEE UTILITY PLANS FOR EXISTING UTILITIES.

20 10 0 20 40
SCALE: 1" = 20'

NOT FOR CONSTRUCTION

SERIES SD02 OF SD02

Conceptual

PLOT DATE: 6/30/2020 5:32:39 PM WSTEBOK

HDR Engineering, Inc.
2280 Market Street, Suite 100
Riverside, CA 92501-2110
951-320-7300
www.hdrinc.com

ISSUE	DATE	DESCRIPTION
1	06/30/20	10% CONCEPTUAL PLANS

BNSF CALL BEFORE YOU DIG # 1-800-422-4133

Underground Service Alert
Call 811
Before You Dig
TWO WORKING DAYS BEFORE YOU DIG

BNSF RAILWAY

HARBOR AND SAN BERNARDINO SUBDIVISION

DESIGNED:	HDR-FZ
CHECKED:	HDR-LV
DRAWN:	HDR-AA
CHECKED:	HDR-EC
DATE:	JUNE 30, 2020
AUTH:	
LINE SEG:	7604/7665

BNSF RAILWAY - HARBOR AND SAN BERNARDINO
SUBDIVISION - BETWEEN TRACKS 7604-2750 AND 7665-1010

MALABAR YARD/49TH ST CLOSURE EXISTING/PROPOSED DRAINAGE

FILENAME	MALA-SD-01.dgn
SCALE	(FULL-SIZE) - AS NOTED

SHEET 7 OF 16

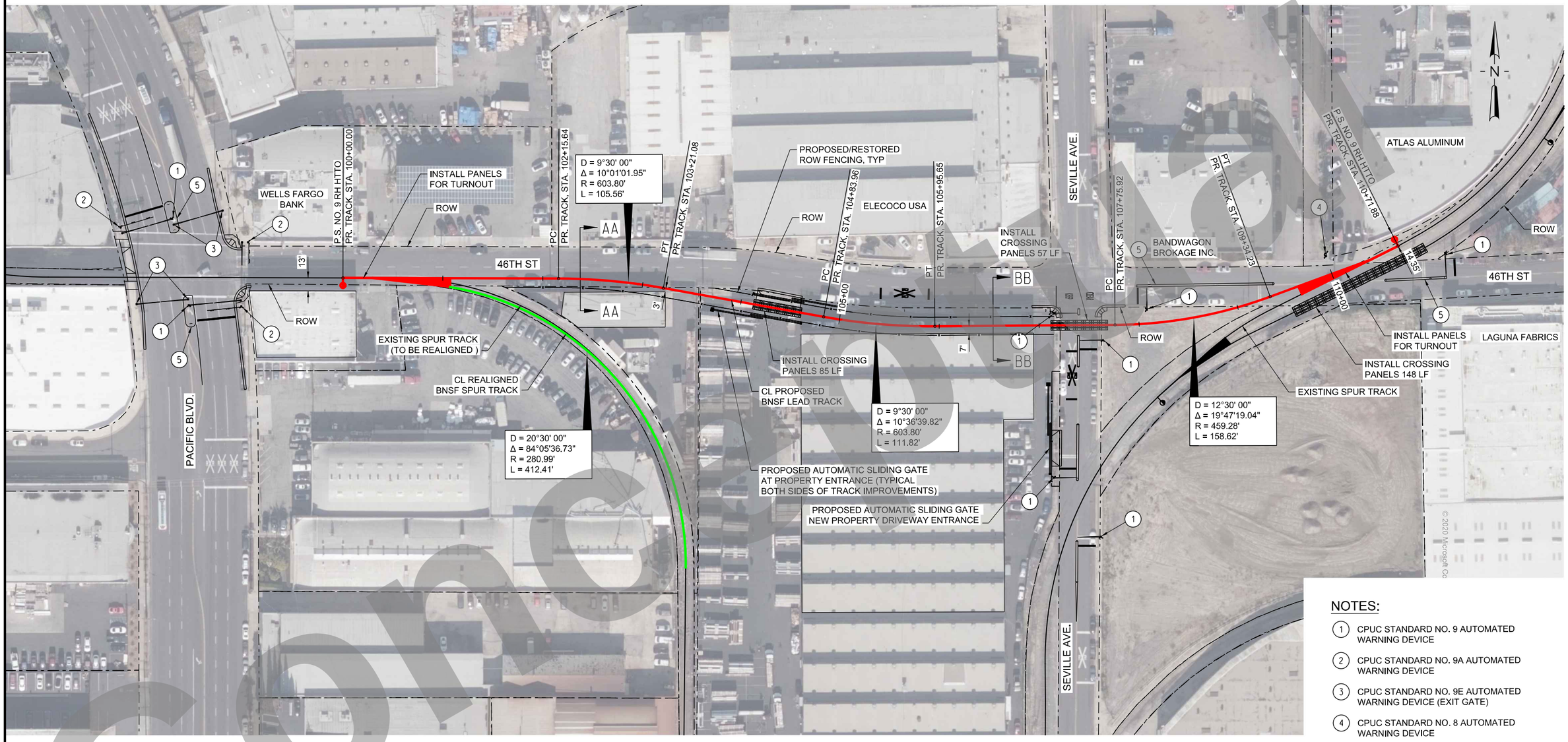

NOTES:

1. CPUC STANDARD NO. 9 AUTOMATED WARNING DEVICE
2. CPUC STANDARD NO. 9A AUTOMATED WARNING DEVICE
3. CPUC STANDARD NO. 9E AUTOMATED WARNING DEVICE (EXIT GATE)
4. CPUC STANDARD NO. 8 AUTOMATED WARNING DEVICE
5. PROPOSED MEDIAN

GENERAL NOTES:

1. ROADWAY TRAFFIC SIGNALS, PENDING TRAFFIC STUDY ANALAYIS, NOT SHOWN FOR CLARITY (ASSUMED AT PACIFIC BLVD AND SEVILLE AVE INTERSECTIONS WITH 46TH STREET)
2. PROPOSED/REPLACEMENT ROW FENCING AND GATES NOT SHOWN FOR CLARITY (DETAILS PENDING STAKEHOLDER COORDINATION)

50 25 0 50 100
SCALE: 1" = 50'

NOT FOR CONSTRUCTION

SERIES P01 OF P02

HDR Engineering, Inc.
2280 Market Street, Suite 100
Riverside, CA 92501-2110
951-320-7300
www.hdrinc.com

ISSUE	DATE	DESCRIPTION
1	06/30/20	10% CONCEPTUAL PLANS

BNSF CALL BEFORE YOU DIG # 1-800-422-4133

Underground Service Alert
Call 811
Before You Dig
TWO WORKING DAYS BEFORE YOU DIG

BNSF RAILWAY

HARBOR AND SAN BERNARDINO SUBDIVISION

DESIGNED:	HDR-BR
CHECKED:	HDR-EC
DRAWN:	HDR-WS
CHECKED:	HDR-JR
DATE:	JUNE 30, 2020
AUTH:	
LINE SEG:	7604/7665

BNSF RAILWAY - HARBOR AND SAN BERNARDINO SUBDIVISION - BETWEEN TRACKS 7604-2750 AND 7665-1010

BNSF LAJ CONNECTOR TRACK PLAN

FILENAME	16542_MALA-R-LD-P01.dgn
SCALE	(FULL-SIZE) - AS NOTED

SHEET 8 OF 16

PLOT DATE: 7/1/2020 2:24:39 PM WSTEBOK

Concept

1.

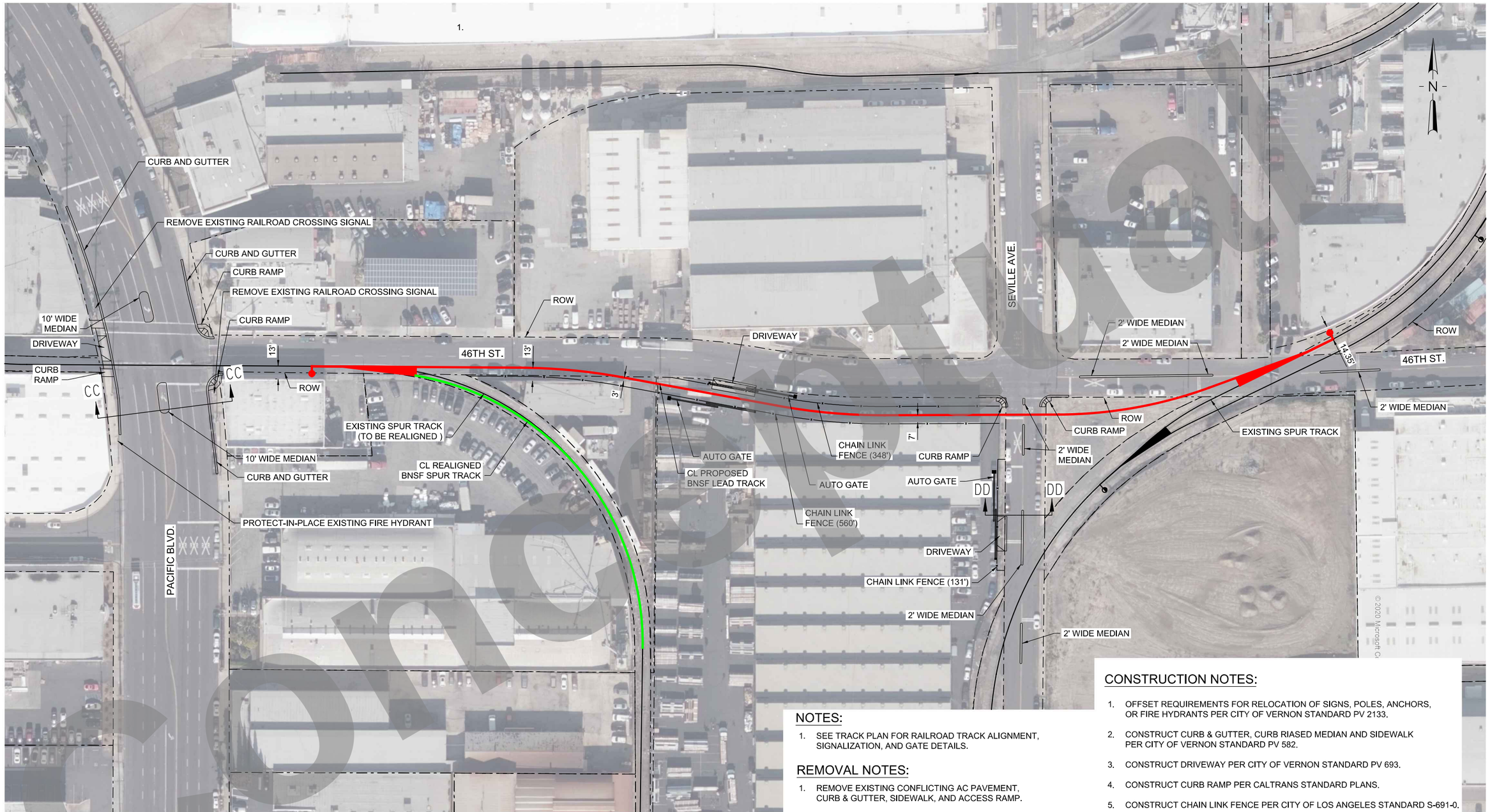

NOTES:

1. SEE TRACK PLAN FOR RAILROAD TRACK ALIGNMENT, SIGNALIZATION, AND GATE DETAILS.

REMOVAL NOTES:

1. REMOVE EXISTING CONFLICTING AC PAVEMENT, CURB & GUTTER, SIDEWALK, AND ACCESS RAMP.

CONSTRUCTION NOTES:

1. OFFSET REQUIREMENTS FOR RELOCATION OF SIGNS, POLES, ANCHORS, OR FIRE HYDRANTS PER CITY OF VERNON STANDARD PV 2133.
2. CONSTRUCT CURB & GUTTER, CURB RIASED MEDIAN AND SIDEWALK PER CITY OF VERNON STANDARD PV 582.
3. CONSTRUCT DRIVEWAY PER CITY OF VERNON STANDARD PV 693.
4. CONSTRUCT CURB RAMP PER CALTRANS STANDARD PLANS.
5. CONSTRUCT CHAIN LINK FENCE PER CITY OF LOS ANGELES STANDARD S-691-0.

50 25 0 50 100
SCALE: 1" = 50'

NOT FOR CONSTRUCTION

SERIES P02 OF P02

HDR Engineering, Inc.
2280 Market Street, Suite 100
Riverside, CA 92501-2110
951-320-7300
www.hdrinc.com

ISSUE	DATE	DESCRIPTION
1	06/30/20	10% CONCEPTUAL PLANS

BNSF CALL BEFORE YOU DIG # 1-800-422-4133

Underground Service Alert
Call 811
Before You Dig
TWO WORKING DAYS BEFORE YOU DIG

BNSF RAILWAY

HARBOR AND SAN BERNARDINO SUBDIVISION

DESIGNED:	HDR-BK
CHECKED:	HDR-BK
DRAWN:	HDR-IS
CHECKED:	HDR-EC
DATE:	JUNE 30, 2020
AUTH:	
LINE SEG:	7604/7665

BNSF RAILWAY - HARBOR AND SAN BERNARDINO SUBDIVISION - BETWEEN TRACKS 7604+2750 AND 7665+1010

BNSF LAJ CONNECTOR CIVIL PLAN

FILENAME	LAJ-C-P02.dgn
SCALE	(FULL-SIZE) - AS NOTED

SHEET 9 OF 16

PLOT DATE: 6/30/2020 4:55:38 PM WSTEBOK

Concept

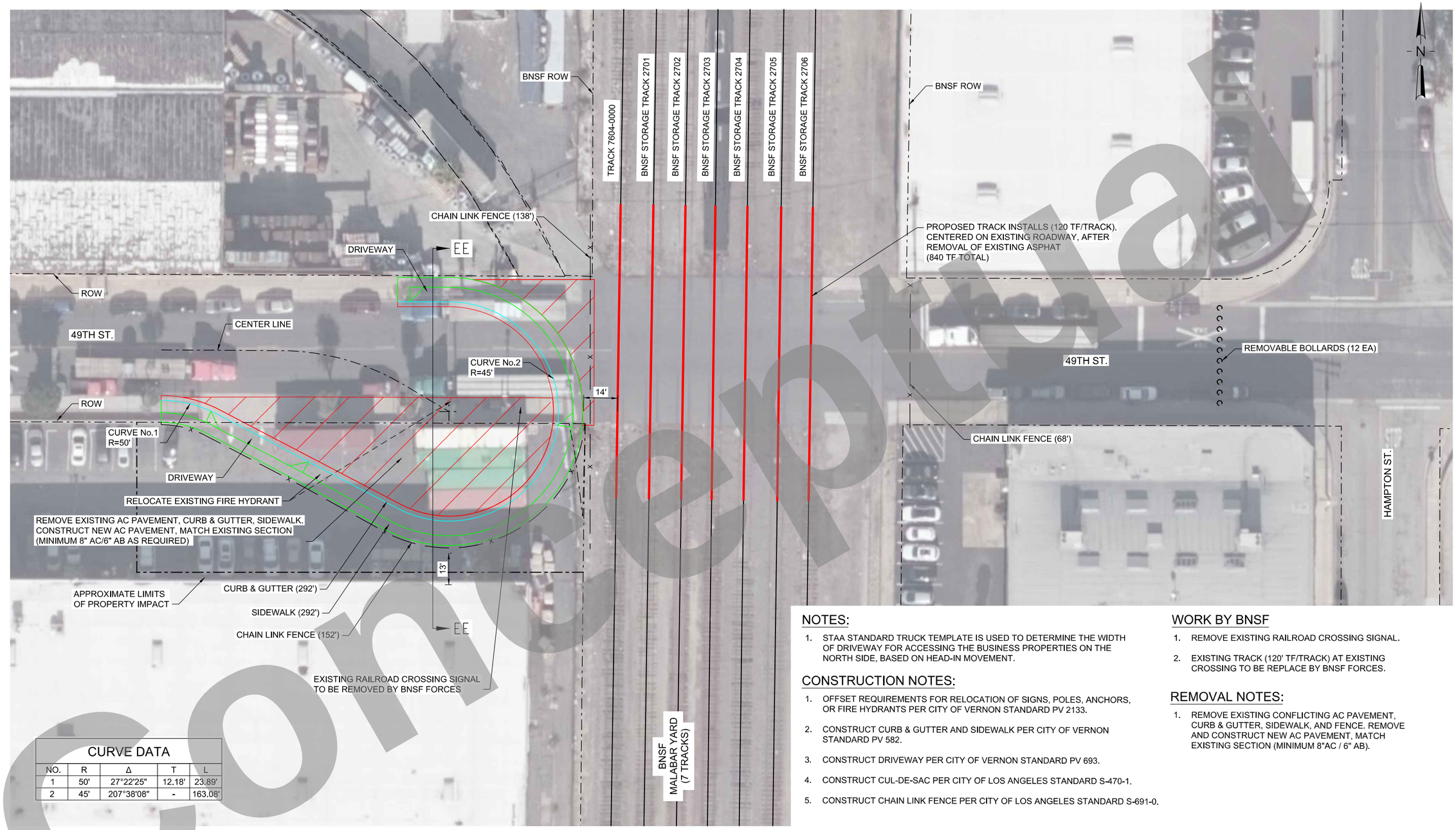

CURVE DATA				
NO.	R	Δ	T	L
1	50'	27°22'25"	12.18'	23.89'
2	45'	207°38'08"	-	163.08'

NOTES:

1. STAA STANDARD TRUCK TEMPLATE IS USED TO DETERMINE THE WIDTH OF DRIVEWAY FOR ACCESSING THE BUSINESS PROPERTIES ON THE NORTH SIDE, BASED ON HEAD-IN MOVEMENT.

CONSTRUCTION NOTES:

1. OFFSET REQUIREMENTS FOR RELOCATION OF SIGNS, POLES, ANCHORS, OR FIRE HYDRANTS PER CITY OF VERNON STANDARD PV 2133.
2. CONSTRUCT CURB & GUTTER AND SIDEWALK PER CITY OF VERNON STANDARD PV 582.
3. CONSTRUCT DRIVEWAY PER CITY OF VERNON STANDARD PV 693.
4. CONSTRUCT CUL-DE-SAC PER CITY OF LOS ANGELES STANDARD S-470-1.
5. CONSTRUCT CHAIN LINK FENCE PER CITY OF LOS ANGELES STANDARD S-691-0.

WORK BY BNSF

1. REMOVE EXISTING RAILROAD CROSSING SIGNAL.
2. EXISTING TRACK (120' TF/TRACK) AT EXISTING CROSSING TO BE REPLACE BY BNSF FORCES.

REMOVAL NOTES:

1. REMOVE EXISTING CONFLICTING AC PAVEMENT, CURB & GUTTER, SIDEWALK, AND FENCE. REMOVE AND CONSTRUCT NEW AC PAVEMENT, MATCH EXISTING SECTION (MINIMUM 8"AC / 6" AB).

20 10 0 20 40
SCALE: 1" = 20'

NOT FOR CONSTRUCTION

SERIES RD01 OF RD03

Conceptual

PLOT DATE: 6/30/2020 5:17:50 PM WSTEBOK

HDR Engineering, Inc.
2280 Market Street, Suite 100
Riverside, CA 92501-2110
951-320-7500
www.hdrinc.com

ISSUE	DATE	DESCRIPTION
1	06/30/20	10% CONCEPTUAL PLANS

BNSF CALL BEFORE YOU DIG # 1-800-422-4133

Underground Service Alert
Call 811
Before You Dig
TWO WORKING DAYS BEFORE YOU DIG

BNSF RAILWAY

HARBOR AND SAN BERNARDINO SUBDIVISION

DESIGNED:	HDR-BK
CHECKED:	HDR-BK
DRAWN:	HDR-IS
CHECKED:	HDR-EC
DATE:	JUNE 30, 2020
AUTH:	
LINE SEG:	7604/7665

BNSF RAILWAY - HARBOR AND SAN BERNARDINO
SUBDIVISION - BETWEEN TRACKS 7604-2750 AND 7665-1010

MALABAR YARD/49TH ST CLOSURE GRADE CROSSING

FILENAME	MALA-C-RD01.dgn	SHEET	10 OF 16
SCALE	(FULL-SIZE) - AS NOTED		

NOTES:

1. SEE TRACK PLAN FOR RAILROAD TRACK ALIGNMENT, SIGNALIZATION, AND GATE DETAILS.

REMOVAL NOTES:

1. REMOVE EXISTING CONFLICTING AC PAVEMENT, CURB & GUTTER, SIDEWALK, AND ACCESS RAMP.
2. WET SANDBLAST AND REMOVE EXISTING CONFLICTING STRIPES AND/OR PAVEMENT MARKINGS.
3. REMOVE EXISTING CONFLICTING ROAD SIGN AND/OR POST.

CONSTRUCTION NOTES:

1. OFFSET REQUIREMENTS FOR RELOCATION OF SIGNS, POLES, ANCHORS, OR FIRE HYDRANTS PER CITY OF VERNON STANDARD PV 2133.
2. CONSTRUCT CURB & GUTTER, CURB RAISED MEDIAN AND SIDEWALK PER CITY OF VERNON STANDARD PV 582.
3. CONSTRUCT CURB RAMP PER CALTRANS STANDARD PLANS.
4. INSTALL PAVEMENT STRIPES, MARKINGS, AND ROAD SIDE SIGNS PER CA MUTCD STANDARD DETAILS.

SIGNAGE REFERENCES



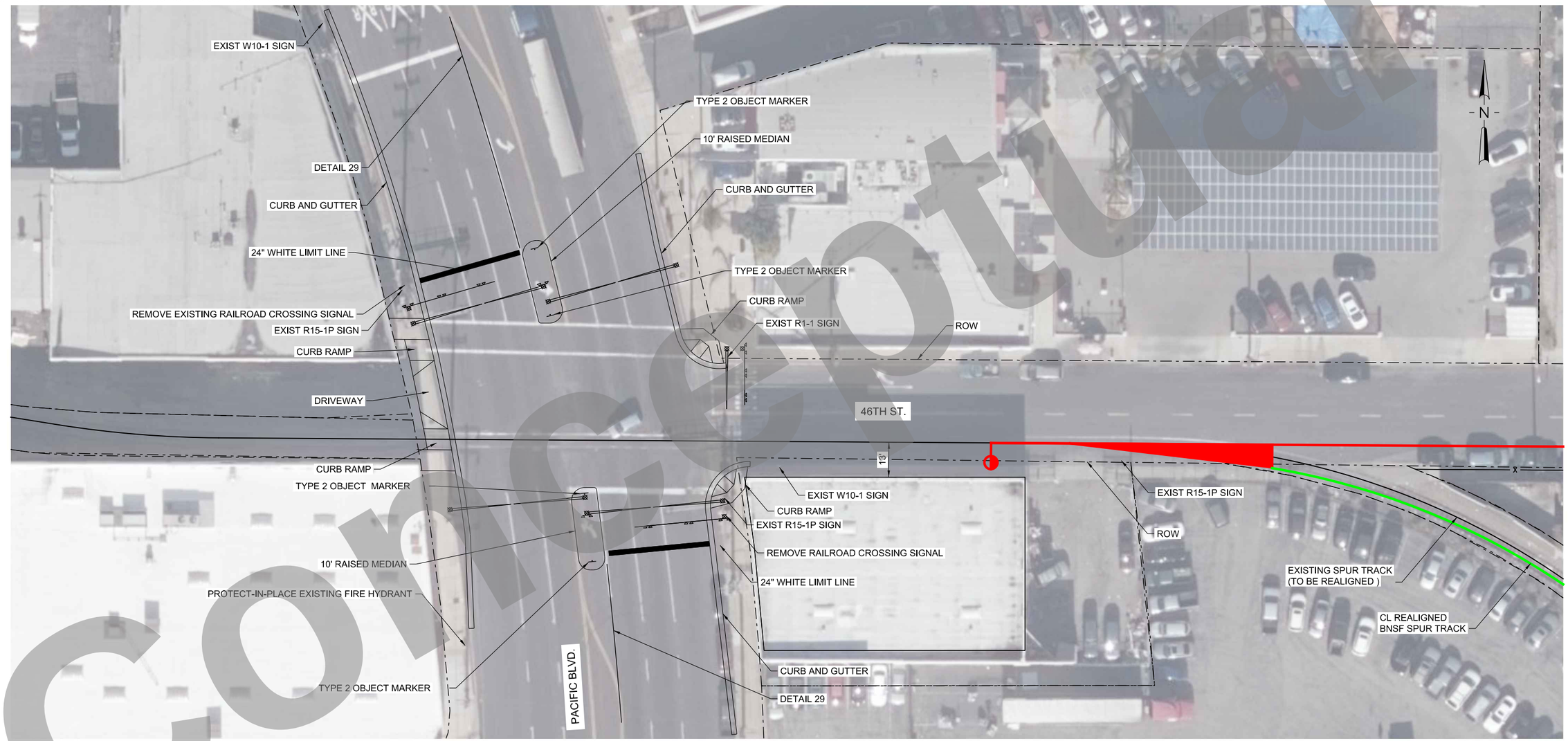

Concept

NOT FOR CONSTRUCTION

SERIES RD02 OF RD03

PLOT DATE: 6/30/2020 4:56:43 PM WSTEBOK

HDR Engineering, Inc.
2280 Market Street, Suite 100
Riverside, CA 92501-2110
951-320-7300
www.hdrinc.com

ISSUE	DATE	DESCRIPTION
1	06/30/20	10% CONCEPTUAL PLANS

BNSF CALL BEFORE YOU DIG # 1-800-422-4133

Underground Service Alert
Call 811
Before You Dig
TWO WORKING DAYS BEFORE YOU DIG

BNSF RAILWAY

HARBOR AND SAN BERNARDINO SUBDIVISION

DESIGNED:	HDR-BK
CHECKED:	HDR-BK
DRAWN:	HDR-JS
CHECKED:	HDR-EC
DATE:	JUNE 30, 2020
AUTH:	
LINE SEG:	7604/7665

BNSF RAILWAY - HARBOR AND SAN BERNARDINO
SUBDIVISION - BETWEEN TRACKS 7604-2750 AND 7665-1010

PACIFIC BLVD AND 46TH STREET GRADE CROSSING

FILENAME	LAJ-C-RD02.dgn
SCALE	(FULL-SIZE) - AS NOTED

SHEET 11 OF 16

NOTES:

1. SEE TRACK PLAN FOR RAILROAD TRACK ALIGNMENT, SIGNALIZATION, AND GATE DETAILS.

REMOVAL NOTES:

1. REMOVE EXISTING CONFLICTING AC PAVEMENT, CURB & GUTTER, SIDEWALK, AND ACCESS RAMP.
2. WET SANDBLAST AND REMOVE EXISTING CONFLICTING STRIPES AND/OR PAVEMENT MARKINGS.
3. REMOVE EXISTING CONFLICTING ROAD SIGN AND/OR POST.

CONSTRUCTION NOTES:

1. OFFSET REQUIREMENTS FOR RELOCATION OF SIGNS, POLES, ANCHORS, OR FIRE HYDRANTS TO BE PER CITY OF VERNON STANDARD PV 2133.
2. CONSTRUCT CURB & GUTTER, CURB RAISED MEDIAN AND SIDEWALK PER CITY OF VERNON STANDARD PV 582.
3. CONSTRUCT CURB RAMP PER CALTRANS STANDARD PLANS.
4. INSTALL PAVEMENT STRIPES, MARKINGS, AND ROAD SIDE SIGNS PER CA MUTCD STANDARD DETAILS.

SIGNAGE REFERENCES

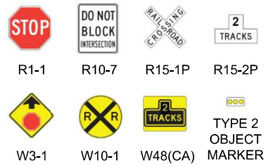

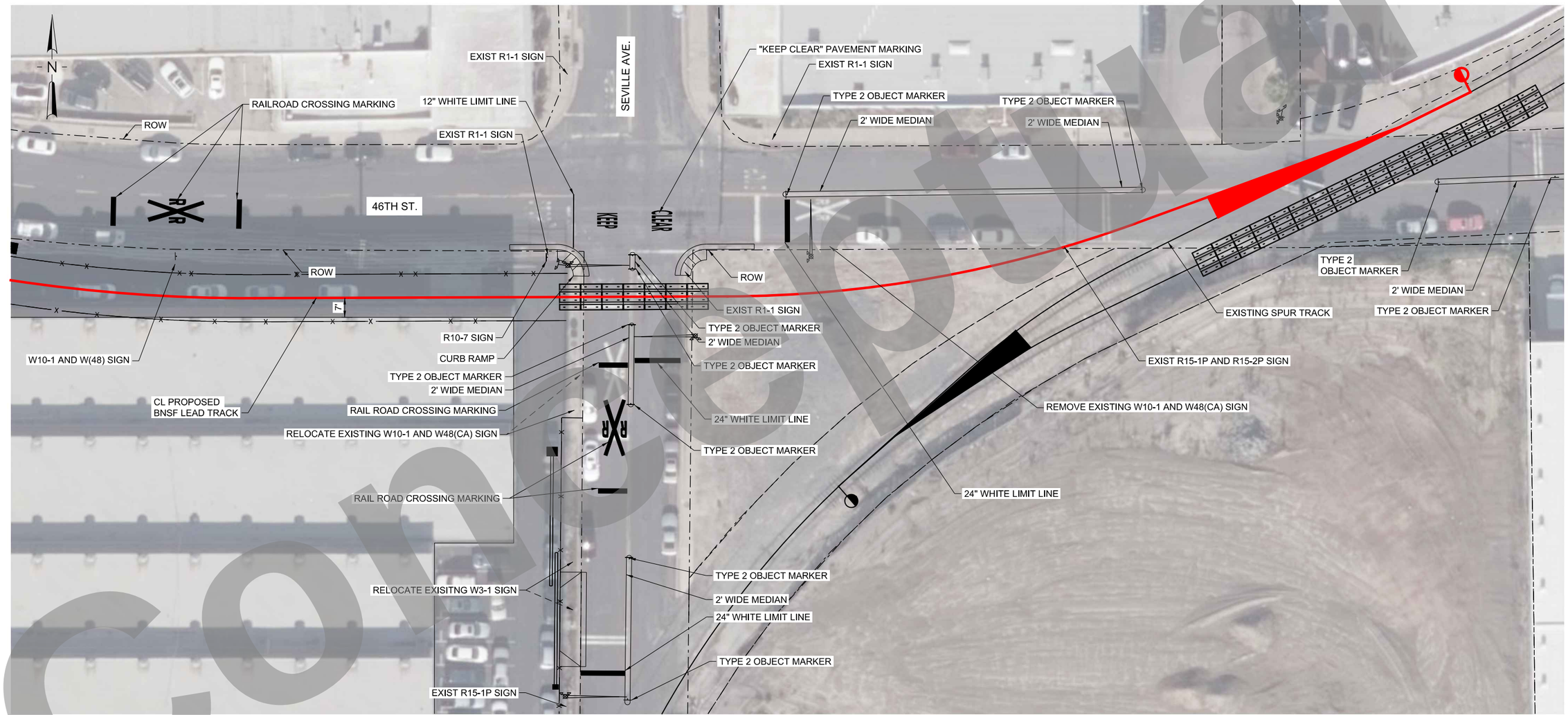

20 10 0 20 40
SCALE: 1" = 20'

NOT FOR CONSTRUCTION

SERIES RD03 OF RD03

conceptual

PLOT DATE: 6/30/2020 4:57:20 PM WSTEBOK

HDR Engineering, Inc.
2280 Market Street, Suite 100
Riverside, CA 92501-2110
951-320-7300
www.hdrinc.com

ISSUE	DATE	DESCRIPTION
1	06/30/20	10% CONCEPTUAL PLANS

BNSF CALL BEFORE YOU DIG # 1-800-422-4133

Underground Service Alert
Call 811
Before You Dig
TWO WORKING DAYS BEFORE YOU DIG

BNSF RAILWAY

HARBOR AND SAN BERNARDINO SUBDIVISION

DESIGNED:	HDR-BK
CHECKED:	HDR-BK
DRAWN:	HDR-IS
CHECKED:	HDR-EC
DATE:	JUNE 30, 2020
AUTH:	
LINE SEG:	7604/7665

BNSF RAILWAY - HARBOR AND SAN BERNARDINO
SUBDIVISION - BETWEEN TRACKS 7604-2750 AND 7665-1010

SEVILLE AVENUE AND 46TH STREET GRADE CROSSING

FILENAME	LAJ-C-RD03.dgn
SCALE	(FULL-SIZE) - AS NOTED

SHEET 12 OF 16

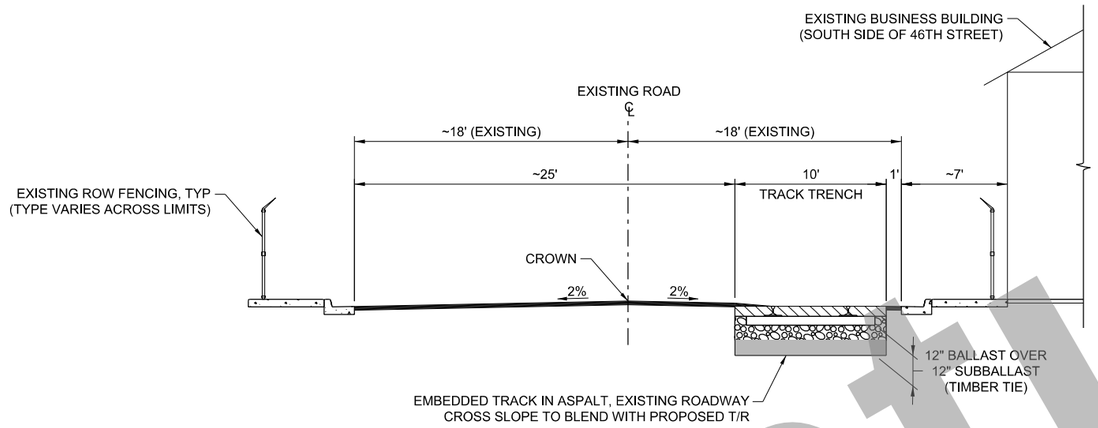

TYPICAL SECTION - ASPHALT EMBEDDED TRACK (RIGHT)

AA
P01

NOT TO SCALE
(VIEW LOOKING EAST)

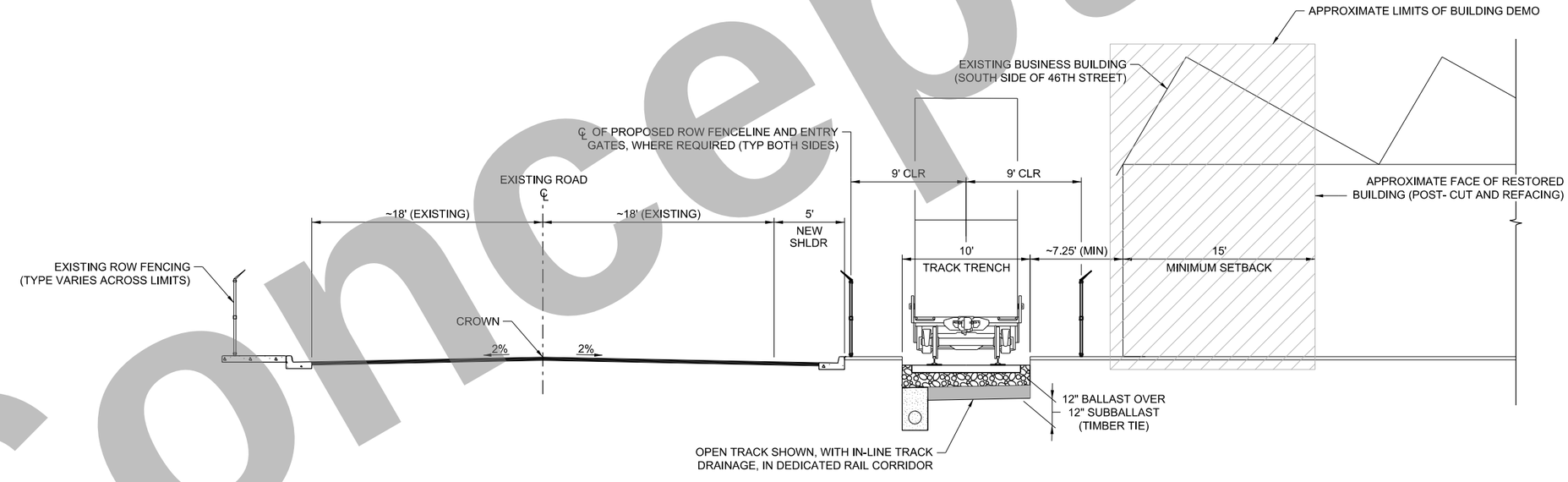

TYPICAL SECTION - OPEN TRACK OUTSIDE OF ROADWAY SECTION

BB
P01

NOT TO SCALE
(VIEW LOOKING EAST)

Conceptual

NOT FOR CONSTRUCTION

SERIES TS01 OF TS02

HDR Engineering, Inc.
2280 Market Street, Suite 100
Riverside, CA 92501-2110
951-320-7300
www.hdrinc.com

ISSUE	DATE	DESCRIPTION
1	06/30/20	10% CONCEPTUAL PLANS

BNSF CALL BEFORE YOU DIG # 1-800-422-4133

Underground Service Alert
Call 811
Before You Dig
TWO WORKING DAYS BEFORE YOU DIG

BNSF RAILWAY

HARBOR AND SAN BERNARDINO SUBDIVISION

DESIGNED:	HDR-BR
CHECKED:	HDR-EC
DRAWN:	HDR-WS
CHECKED:	HDR-JR
DATE:	JUNE 30, 2020
AUTH:	
LINE SEG:	7604/7665

BNSF RAILWAY - HARBOR AND SAN BERNARDINO
SUBDIVISION - BETWEEN TRACKS 7604-2750 AND 7665-1010

RAIL TYPICAL SECTIONS

FILENAME	16542_MALA-R-TS01.dgn
SCALE	(FULL-SIZE) - AS NOTED

SHEET 13 OF 16

PLOT DATE: 6/30/2020 4:57:31 PM WSTEBOK

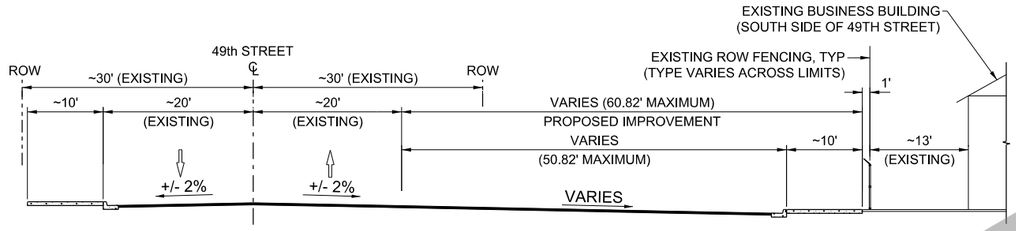

TYPICAL SECTION - 49TH ST (EE / RD01)

NOT TO SCALE
(VIEW LOOKING EAST)

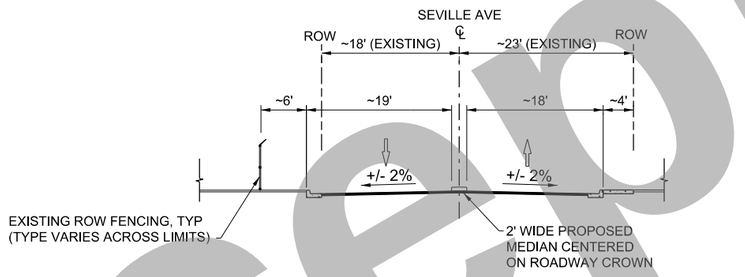

TYPICAL SECTION - SEVILLE AVE (DD / P02)

NOT TO SCALE
(VIEW LOOKING NORTH)

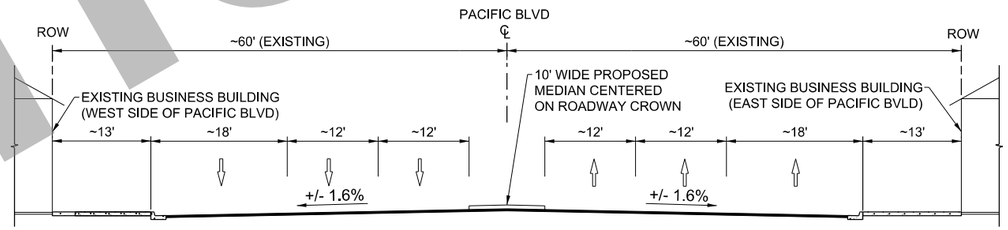

TYPICAL SECTION - PACIFIC BLVD (CC / P02)

NOT TO SCALE
(VIEW LOOKING NORTH)

Concept

NOT FOR CONSTRUCTION

SERIES TS02 OF TS02

PLOT DATE: 6/30/2020 4:57:41 PM WSTEBOK

HDR Engineering, Inc.
2280 Market Street, Suite 100
Riverside, CA 92501-2110
951-320-7300
www.hdrinc.com

ISSUE	DATE	DESCRIPTION
1	06/30/20	10% CONCEPTUAL PLANS

BNSF CALL BEFORE YOU DIG # 1-800-422-4133

Underground Service Alert
Call 811
Before You Dig
TWO WORKING DAYS BEFORE YOU DIG

BNSF RAILWAY

HARBOR AND SAN BERNARDINO SUBDIVISION

DESIGNED:	HDR-BK
CHECKED:	HDR-BK
DRAWN:	HDR-IS
CHECKED:	HDR-EC
DATE:	JUNE 30, 2020
AUTH:	
LINE SEG:	7604/7665

BNSF RAILWAY - HARBOR AND SAN BERNARDINO
SUBDIVISION - BETWEEN TRACKS 7604-2750 AND 7665-1010

CIVIL TYPICAL SECTIONS

FILENAME	16542_MALA-C-TS02.dgn
SCALE	(FULL-SIZE) - AS NOTED

SHEET 14 OF 16

CONSTRUCTION NOTES

1. INSTALL PAVEMENT STRIPES, MARKINGS, AND ROAD SIDE SIGNS PER CA MUTCD STANDARD DETAILS.

REMOVAL NOTES

1. WET SANDBLAST AND REMOVE EXISTING CONFLICTING STRIPES AND/OR PAVEMENT MARKINGS.
2. REMOVE EXISTING CONFLICTING ROAD SIGN AND/OR POST.

SIGNAGE REFERENCES



50 25 0 50 100
SCALE: 1" = 50'

NOT FOR CONSTRUCTION

SERIES SS01 OF SS02

HDR Engineering, Inc.
2280 Market Street, Suite 100
Riverside, CA 92501-2110
951-320-7300
www.hdrinc.com

ISSUE	DATE	DESCRIPTION
1	06/30/20	10% CONCEPTUAL PLANS

BNSF CALL BEFORE YOU DIG # 1-800-422-4133

Underground Service Alert
Call 811
Before You Dig
TWO WORKING DAYS BEFORE YOU DIG

BNSF RAILWAY

HARBOR AND SAN BERNARDINO SUBDIVISION

DESIGNED:	HDR-BK
CHECKED:	HDR-BK
DRAWN:	HDR-JS
CHECKED:	HDR-EC
DATE:	JUNE 30, 2020
AUTH:	
LINE SEG:	7604/7665

BNSF RAILWAY - HARBOR AND SAN BERNARDINO SUBDIVISION - BETWEEN TRACKS 7604-2750 AND 7665-1010

BNSF LAJ CONNECTOR STRIPING AND SIGNAGE

FILENAME	LAJ-C-SS01.dgn
SCALE	(FULL-SIZE) - AS NOTED
SHEET	15 OF 16

PLOT DATE: 6/30/2020 4:58:15 PM WSTEBOK

Concept

CONSTRUCTION NOTES

1. INSTALL PAVEMENT STRIPES, MARKINGS, AND ROAD SIDE SIGNS PER CA MUTCD STANDARD DETAILS.

REMOVAL NOTES

1. WET SANDBLAST AND REMOVE EXISTING CONFLICTING STRIPES AND/OR PAVEMENT MARKINGS.
2. REMOVE EXISTING CONFLICTING ROAD SIGN AND/OR POST.

SIGNAGE REFERENCES



R15-1P R15-2P W10-1



W14-1 W48(CA)

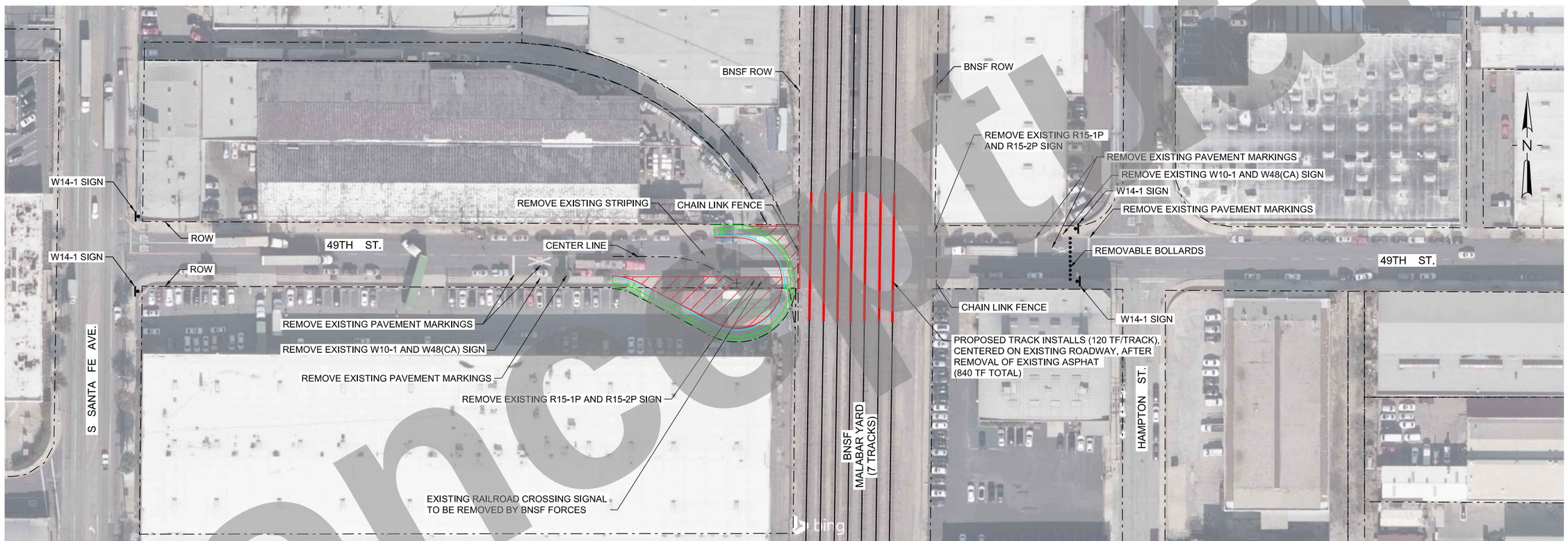

50 25 0 50 100
SCALE: 1" = 50'

NOT FOR CONSTRUCTION

SERIES SS02 OF SS02

HDR Engineering, Inc.
2280 Market Street, Suite 100
Riverside, CA 92501-2110
951-320-7300
www.hdrinc.com

ISSUE	DATE	DESCRIPTION
1	06/30/20	10% CONCEPTUAL PLANS

BNSF CALL BEFORE YOU DIG # 1-800-422-4133

Underground Service Alert
Call 811
Before You Dig
TWO WORKING DAYS BEFORE YOU DIG

BNSF RAILWAY

HARBOR AND SAN BERNARDINO SUBDIVISION

DESIGNED:	HDR-BK
CHECKED:	HDR-BK
DRAWN:	HDR-JS
CHECKED:	HDR-EC
DATE:	JUNE 30, 2020
AUTH:	
LINE SEG:	7604/7665

BNSF RAILWAY - HARBOR AND SAN BERNARDINO SUBDIVISION - BETWEEN TRACKS 7604-2750 AND 7665-1010

MALABAR YARD/49TH ST CLOSURE STRIPING AND SIGNAGE

FILENAME	MALA-C-SS02.dgn
SCALE	(FULL-SIZE) - AS NOTED

SHEET 16 OF 16

PLOT DATE: 6/30/2020 4:58:45 PM WSTEBOK

Concept

Malabar Yard Railroad Improvements Design Option 2 - Index and Plan Sheets

(THIS PAGE INTENTIONALLY LEFT BLANK)

MALABAR YARD DESIGN OPTION 2 PLAN SHEETS		
SHEET NO.	DRAWING NO.	DRAWING TITLE
1	GN01	COVER SHEET
2	ROW01	RIGHT-OF-WAY IMPACTS LAJ CONNECTOR/46TH STREET
3	ROW02	CLOSURE RIGHT-OF-WAY IMPACTS MALABAR YARD/49TH STREET
4	UT01	EXISTING UTILITIES LAJ CONNECTOR/46TH STREET
5	UT02	MALABAR YARD/49TH ST CLOSURE MALABAR YARD/49TH ST CLOSURE EXISTING UTILITIES
6	SD01	EXISTING/PROPOSED DRAINAGE LAJ CONNECTOR/46TH STREET
7	SD02	EXISTING/PROPOSED DRAINAGE MALABAR YARD/49TH ST CLOSURE
8	P01	TRACK PLAN
9	P02	CIVIL PLAN
10	RD01	MALABAR YARD/49TH ST CLOSURE GRADE CROSSING
11	RD02	PACIFIC BLVD AND 46TH STREET GRADE CROSSING
12	RD03	GRADE CROSSING SEVILLE AVE AND 46TH ST
13	TS01	RAIL TYPICAL SECTIONS
14	TS02	CIVIL TYPICAL SECTIONS
15	SS01	STRIPING AND SIGNAGE LAJ CONNECTOR/46TH STREET
16	SS02	MALABAR YARD/49TH ST CLOSURE STRIPING AND SIGNAGE

BNSF RAILWAY SM

HARBOR AND SAN BERNARDINO SUBDIVISION
LINE SEGMENT 7604/7665

MALABAR YARD / 49TH STREET CLOSURE AND LAJ CONNECTOR BETWEEN TRACKS 7604-2750 AND 7665-1010 (REFERENCE LOCATION: MP1.3, HARBOR SUB)



PROJECT LOCATION
NOT TO SCALE



LOS ANGELES, CA

PROJECT AREA
NOT TO SCALE

10% CONCEPTUAL RESUBMITAL
(DESIGN ALTERNATIVES)
FEBRUARY 26, 2021

NOT FOR CONSTRUCTION

SERIES GN01 OF GN04

Conceptual

PLOT DATE: 2/26/2021 3:00:47 PM WSTEBOK

HDR Engineering, Inc.
2280 Market Street, Suite 100
Riverside, CA 92501-2110
951-320-7300
www.hdrinc.com

ISSUE	DATE	DESCRIPTION
1A	02/26/21	10% CONCEPTUAL PLANS (DESIGN ALTERNATIVES)
1	06/30/20	10% CONCEPTUAL PLANS

BNSF CALL BEFORE YOU DIG # 1-800-422-4133

Underground Service Alert
Call 811
Before You Dig
TWO WORKING DAYS BEFORE YOU DIG

BNSF RAILWAY
HARBOR AND SAN BERNARDINO SUBDIVISION

DESIGNED:	HDR-BR
CHECKED:	HDR-EC
DRAWN:	HDR-WS
CHECKED:	HDR-BR
DATE:	FEBRUARY 26, 2021
AUTH:	
LINE SEG:	7604/7665

BNSF RAILWAY - HARBOR AND SAN BERNARDINO
SUBDIVISION - BETWEEN TRACKS 7604-2750 AND 7665-1010

COVER SHEET

FILENAME	16542-MALA-G-GN01.dgn
SCALE	(FULL-SIZE) - AS NOTED

SHEET 1 OF 16

TO LONG BEACH, CA
TIMETABLE WEST

TO SAN BERNARDINO, CA
TIMETABLE EAST

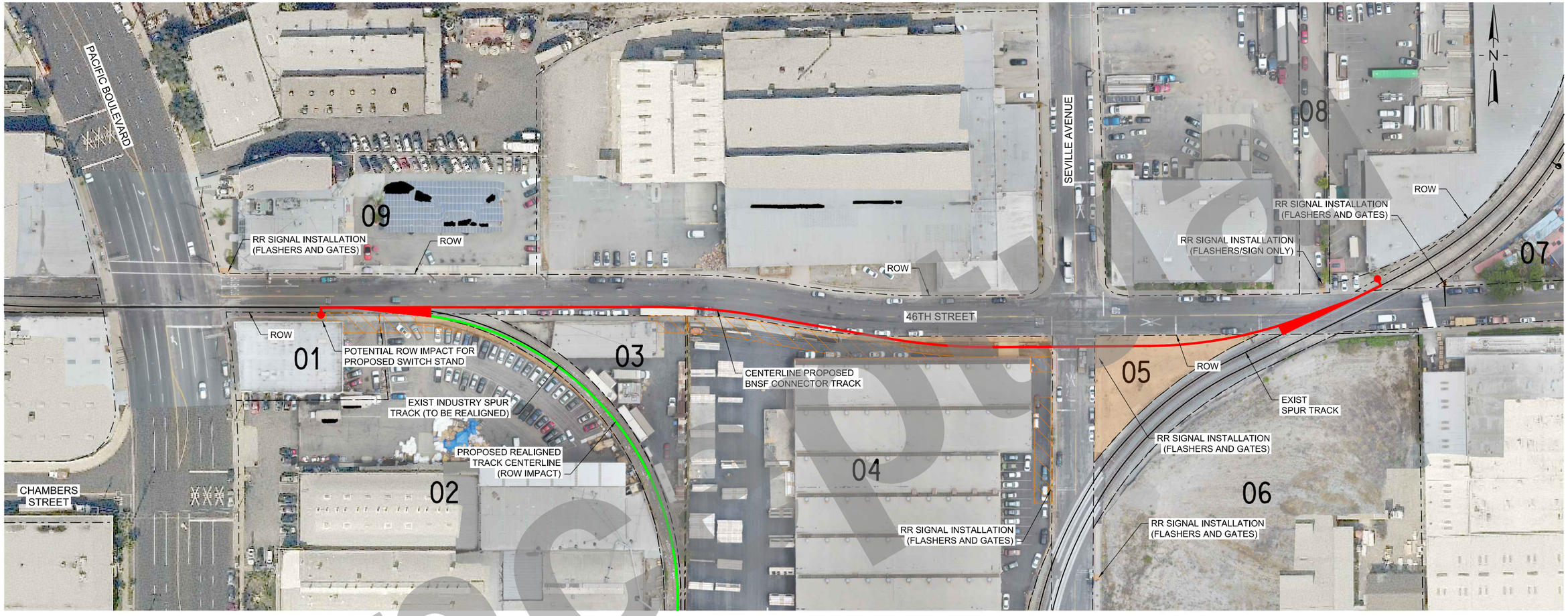

LEGEND:

- ESTIMATED PROPERTY IMPACTS (OUTSIDE OF BNSF ROW)
- TCE
- XX PARCEL DESIGNATION
- RIGHT OF WAY / PROPERTY LINE

POTENTIAL RIGHT-OF-WAY IMPACTS (ESTIMATED)

ID	AIN	OWNER	ACQ AREA (SF)	DESCRIPTION
01	6308-004-011	JONES, JEREMY	85	PARTIAL ACQ NEEDED FOR SWITCH STAND AND TRACK REALIGNMENT; TEMP ACCESS DISRUPTION DURING CONSTRUCTION
			880	TCE
02	6308-004-012	GUERRA, JOSE & LIDIA	1,335	PARTIAL ACQ NEEDED FOR TRACK REALIGNMENT; TEMP ACCESS DISRUPTION DURING CONSTRUCTION
			870	TCE
03	6308-004-012	GUERRA, JOSE & LIDIA	520	TCE
04	6308-004-013	ALPINE LEONIS LLC	3,415	PARTIAL ACQ NEEDED FOR TRACK REALIGNMENT AND SIGNAL; TEMP ACCESS DISRUPTION DURING CONSTRUCTION
			6,150	TCE
05	6308-002-017	PBR SEVILLE LLC	8,360	PURCHASE ENTIRE CORNER PORTION OF LOT FOR TRACK AND SIGNAL CONSTRUCTION
06	6308-002-016	PBR SEVILLE LLC	55	PARTIAL ACQ NEEDED FOR SIGNAL ON SEVILLE AVE
07	6308-001-023	MCI PROPERTIES LLC	35	PARTIAL ACQ NEEDED FOR SIGNAL ON 46TH STREET
08	6308-001-026	CHAHAL WHITE LLC	75	PARTIAL ACQ NEEDED FOR SIGNAL ON 46TH STREET
09	6308-005-007	FLORMAN FAMILY	60	PARTIAL ACQ NEEDED FOR SIGNAL ON 46TH STREET
--	–	CITY OF VERNON	--	VARIOUS PERMANENT AND TEMPORARY RIGHTS NEEDED TO CONSTRUCT TRACK (MEDIANS, SIDEWALKS, CURB AND GUTTER, AND SIGNALS WITHIN STREET RIGHT-OF-WAY)

NOTE: ESTIMATED PROPERTY IMPACTS AS OF 10% CONCEPTUAL DESIGN. TOTAL IMPACTED AREA/LIMITS (PERMANENT AND TEMPORARY) AND PARCELS TO BE DETERMINED PENDING ADDITIONAL ENGINEERING DESIGN AND STAKEHOLDER COORDINATION.

JOINT USE AGREEMENTS (JUAs), NEW AND/OR MODIFICATIONS TO EXISTING, NOT SHOWN FOR CLARITY

NOTES:

1. FOR LOCATIONS OF ALL PROPOSED RR SIGNALS, SIGNAGE, FLASHERS, AND GATE ARMS SEE CIVIL AND TRACK PLANS
2. STREET TRAFFIC SIGNALS, AND ANY ASSOCIATED ROW IMPACTS, NOT SHOWN FOR CLARITY
3. PROPOSED/REPLACED ROW GATES, NOT SHOWN FOR CLARITY
4. FOR LOCATIONS OF ALL PROPOSED CITY OF VERNON STREET RIGHT-OF-WAY IMPROVEMENTS (MEDIANS, SIGNAGE, ETC...) SEE CIVIL AND TRACK PLANS. ASSOCIATED ROW IMPACTS, NOT SHOWN FOR CLARITY

50 25 0 50 100
SCALE: 1" = 50'

NOT FOR CONSTRUCTION

SERIES ROW01 OF ROW02

Concept

PLOT DATE: 2/26/2021 5:15:44 PM WSTEBOK

HDR Engineering, Inc.
2280 Market Street, Suite 100
Riverside, CA 92501-2110
951-320-7300
www.hdrinc.com

ISSUE	DATE	DESCRIPTION
1A	02/26/21	10% CONCEPTUAL PLANS (DESIGN ALTERNATIVES)
1	06/30/20	10% CONCEPTUAL PLANS

BNSF CALL BEFORE YOU DIG # 1-800-422-4133

Underground Service Alert
Call 811
Before You Dig
TWO WORKING DAYS BEFORE YOU DIG

BNSF RAILWAY

HARBOR AND SAN BERNARDINO SUBDIVISION

DESIGNED:	HDR-BR
CHECKED:	HDR-EC
DRAWN:	HDR-WS
CHECKED:	HDR-BR
DATE:	FEBRUARY 26, 2021
AUTH:	
LINE SEG:	7604/7665

BNSF RAILWAY - HARBOR AND SAN BERNARDINO SUBDIVISION - BETWEEN TRACKS 7604-2750 AND 7665-1010

LAJ CONNECTOR/46TH STREET RIGHT-OF-WAY IMPACTS

FILENAME	16542_LAJ-C-ROW01.dgn
SCALE	(FULL-SIZE) - AS NOTED

SHEET 2 OF 16

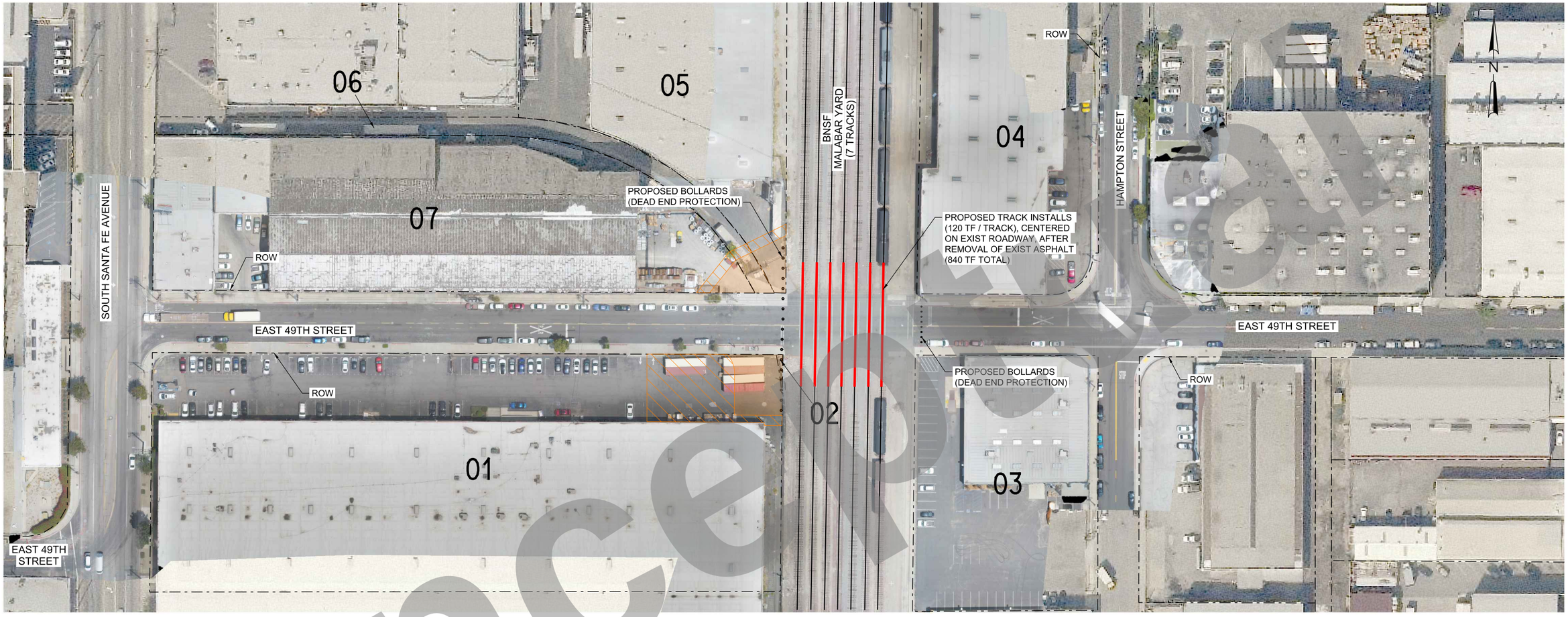

LEGEND:

- ESTIMATED PROPERTY IMPACTS (OUTSIDE OF BNSF ROW)
- TCE
- XX PARCEL DESIGNATION
- RIGHT OF WAY / PROPERTY LINE

RIGHT-OF-WAY IMPACTS (ESTIMATED)

ID	AIN	OWNER	ACQ AREA (SF)	DESCRIPTION
01	6308-011-010	KB NEW YORK BH LLC	2,750	PARTIAL ACQ NEEDED FOR HAMMERHEAD IMPROVEMENTS; TEMP ACCESS DISRUPTION DURING CONSTRUCTION
			6,085	TCE, CONSTRUCTION STAGING & MATERIAL STORAGE
02	6308-011-901	LACMTA	120	FULL ACQ
03	6308-010-037	2516 MILANI LLC	0	NO PROPERTY ACQ ANTICIPATED
04	6308-009-030	FINKEL-HAMPTON LLC	0	NO PROPERTY ACQ ANTICIPATED
05	6308-007-012	GREAT AMERICAN HOLDINGS INV LLC	1,180	PARTIAL ACQ NEEDED FOR HAMMERHEAD IMPROVEMENTS; TEMP ACCESS DISRUPTION DURING CONSTRUCTION
			405	TCE
06	6308-007-020	GREAT AMERICAN HOLDINGS INV LLC	735	PARTIAL ACQ NEEDED FOR HAMMERHEAD IMPROVEMENTS; TEMP ACCESS DISRUPTION DURING CONSTRUCTION
			175	TCE
07	6308-007-006	MELIDO, MICHAEL	730	PARTIAL ACQ NEEDED FOR HAMMERHEAD IMPROVEMENTS; TEMP ACCESS DISRUPTION DURING CONSTRUCTION
			470	TCE
–	–	CITY OF VERNON	--	VARIOUS PERMANENT AND TEMPORARY RIGHTS NEEDED TO CONSTRUCT HAMMERHEAD (CURBS AND SIDEWALKS WITHIN STREET RIGHT-OF-WAY)

NOTE: ESTIMATED PROPERTY IMPACTS AS OF 10% CONCEPTUAL DESIGN. TOTAL IMPACTED AREA/LIMITS (PERMANENT AND TEMPORARY) AND PARCELS TO BE DETERMINED PENDING ADDITIONAL ENGINEERING DESIGN AND STAKEHOLDER COORDINATION.

JOINT USE AGREEMENTS (JUAs), NEW AND/OR MODIFICATIONS TO EXISTING, NOT SHOWN FOR CLARITY

NOTES:

1. FOR LOCATIONS OF ALL PROPOSED CITY OF VERNON STREET RIGHT-OF-WAY IMPROVEMENTS (SIDEWALKS, SIGNAGE, ETC...) SEE CIVIL PLANS. ASSOCIATED ROW IMPACTS, NOT SHOWN FOR CLARITY
2. PROPOSED/REPLACED ROW GATES (TO BE DETERMINED), NOT SHOWN FOR CLARITY
3. STREET TRAFFIC SIGNALS (TO BE DETERMINED), AND ANY ASSOCIATED ROW IMPACTS, NOT SHOWN FOR CLARITY

50 25 0 50 100
SCALE: 1" = 50'

NOT FOR CONSTRUCTION

SERIES ROW02 OF ROW02

Conceptual

PLOT DATE: 2/26/2021 5:16:11 PM WSTEBOK

HDR Engineering, Inc.
2280 Market Street, Suite 100
Riverside, CA 92501-2110
951-320-7300
www.hdrinc.com

ISSUE	DATE	DESCRIPTION
1A	02/26/21	10% CONCEPTUAL PLANS (DESIGN ALTERNATIVES)
1	06/30/20	10% CONCEPTUAL PLANS

BNSF CALL BEFORE YOU DIG # 1-800-422-4133

Underground Service Alert
Call 811
Before You Dig
TWO WORKING DAYS BEFORE YOU DIG

BNSF RAILWAY

HARBOR AND SAN BERNARDINO SUBDIVISION

DESIGNED:	HDR-BR
CHECKED:	HDR-EC
DRAWN:	HDR-WS
CHECKED:	HDR-BR
DATE:	FEBRUARY 26, 2021
AUTH:	
LINE SEG:	7604/7665

BNSF RAILWAY - HARBOR AND SAN BERNARDINO SUBDIVISION - BETWEEN TRACKS 7604-2750 AND 7665-1010

MALABAR YARD/49TH STREET CLOSURE RIGHT-OF-WAY IMPACTS

FILENAME	16542_MALA-C-ROW02.dgn
SCALE	(FULL-SIZE) - AS NOTED

SHEET 3 OF 16

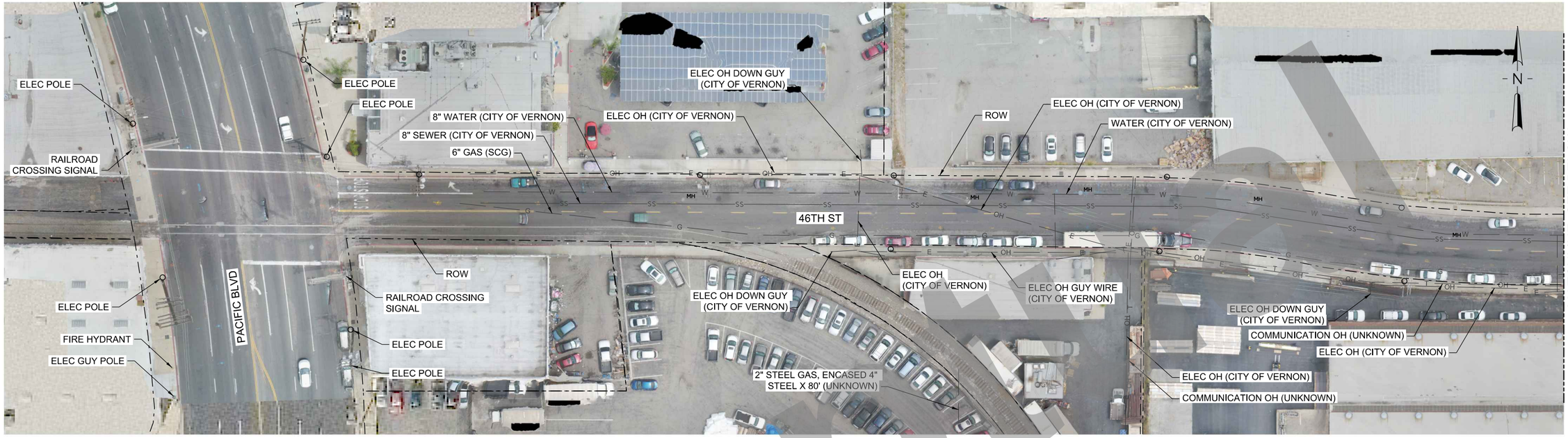

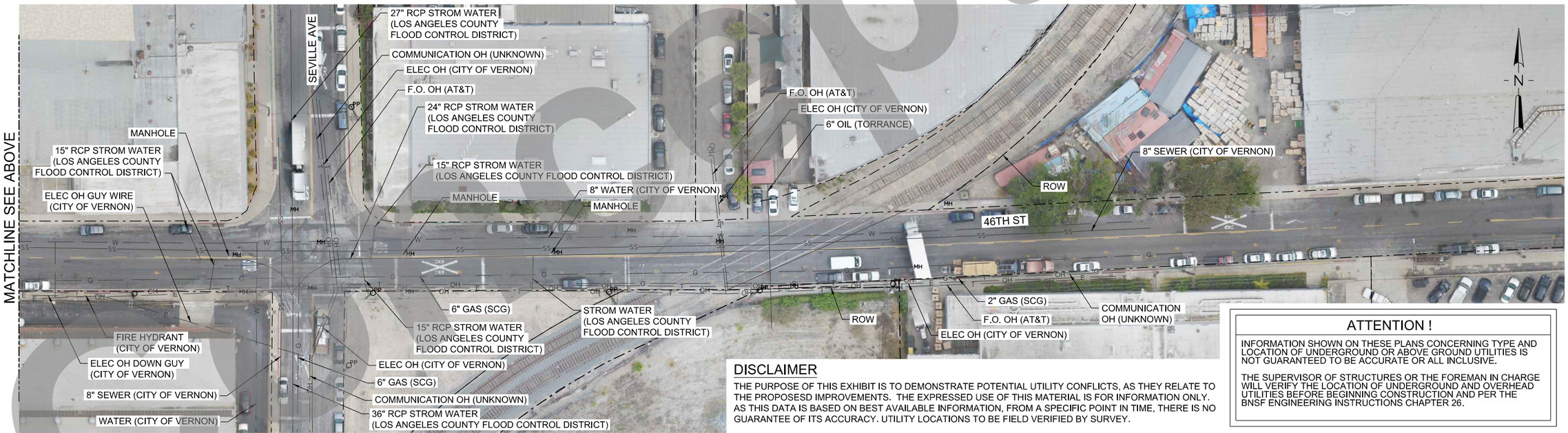

DISCLAIMER

THE PURPOSE OF THIS EXHIBIT IS TO DEMONSTRATE POTENTIAL UTILITY CONFLICTS, AS THEY RELATE TO THE PROPOSESD IMPROVEMENTS. THE EXPRESSED USE OF THIS MATERIAL IS FOR INFORMATION ONLY. AS THIS DATA IS BASED ON BEST AVAILABLE INFORMATION, FROM A SPECIFIC POINT IN TIME, THERE IS NO GUARANTEE OF ITS ACCURACY. UTILITY LOCATIONS TO BE FIELD VERIFIED BY SURVEY.

ATTENTION !

INFORMATION SHOWN ON THESE PLANS CONCERNING TYPE AND LOCATION OF UNDERGROUND OR ABOVE GROUND UTILITIES IS NOT GUARANTEED TO BE ACCURATE OR ALL INCLUSIVE.

THE SUPERVISOR OF STRUCTURES OR THE FOREMAN IN CHARGE WILL VERIFY THE LOCATION OF UNDERGROUND AND OVERHEAD UTILITIES BEFORE BEGINNING CONSTRUCTION AND PER THE BNSF ENGINEERING INSTRUCTIONS CHAPTER 26.

30 15 0 30 60
SCALE: 1" = 30'

NOT FOR CONSTRUCTION

SERIES UT01 OF UT02

PLOT DATE: 2/26/2021 5:16:33 PM WSTEBOK

HDR Engineering, Inc.
2280 Market Street, Suite 100
Riverside, CA 92501-2110
951-320-7000
www.hdrinc.com

ISSUE	DATE	DESCRIPTION
1A	02/26/21	10% CONCEPTUAL PLANS (DESIGN ALTERNATIVES)
1	06/30/20	10% CONCEPTUAL PLANS

BNSF CALL BEFORE YOU DIG # 1-800-422-4133

Underground Service Alert
Call 811
Before You Dig
TWO WORKING DAYS BEFORE YOU DIG

BNSF RAILWAY

HARBOR AND SAN BERNARDINO SUBDIVISION

DESIGNED:	HDR-BK
CHECKED:	HDR-BK
DRAWN:	HDR-IS
CHECKED:	HDR-EC
DATE:	FEBRUARY 26, 2021
AUTH:	
LINE SEG:	7604/7665

BNSF RAILWAY - HARBOR AND SAN BERNARDINO SUBDIVISION - BETWEEN TRACKS 7604-2750 AND 7665-1010

LAJ CONNECTOR/46TH STREET EXISTING UTILITIES

FILENAME	16542-LAJ-U-UT01.dgn
SCALE	(FULL-SIZE) - AS NOTED

SHEET 4 OF 16

DISCLAIMER

THE PURPOSE OF THIS EXHIBIT IS TO DEMONSTRATE POTENTIAL UTILITY CONFLICTS, AS THEY RELATE TO THE PROPOSESD IMPROVEMENTS. THE EXPRESSED USE OF THIS MATERIAL IS FOR INFORMATION ONLY. AS THIS DATA IS BASED ON BEST AVAILABLE INFORMATION, FROM A SPECIFIC POINT IN TIME, THERE IS NO GUARANTEE OF ITS ACCURACY. UTILITY LOCATIONS TO BE FIELD VERIFIED BY SURVEY.

ATTENTION !

INFORMATION SHOWN ON THESE PLANS CONCERNING TYPE AND LOCATION OF UNDERGROUND OR ABOVE GROUND UTILITIES IS NOT GUARANTEED TO BE ACCURATE OR ALL INCLUSIVE.

THE SUPERVISOR OF STRUCTURES OR THE FOREMAN IN CHARGE WILL VERIFY THE LOCATION OF UNDERGROUND AND OVERHEAD UTILITIES BEFORE BEGINNING CONSTRUCTION AND PER THE BNSF ENGINEERING INSTRUCTIONS CHAPTER 26.

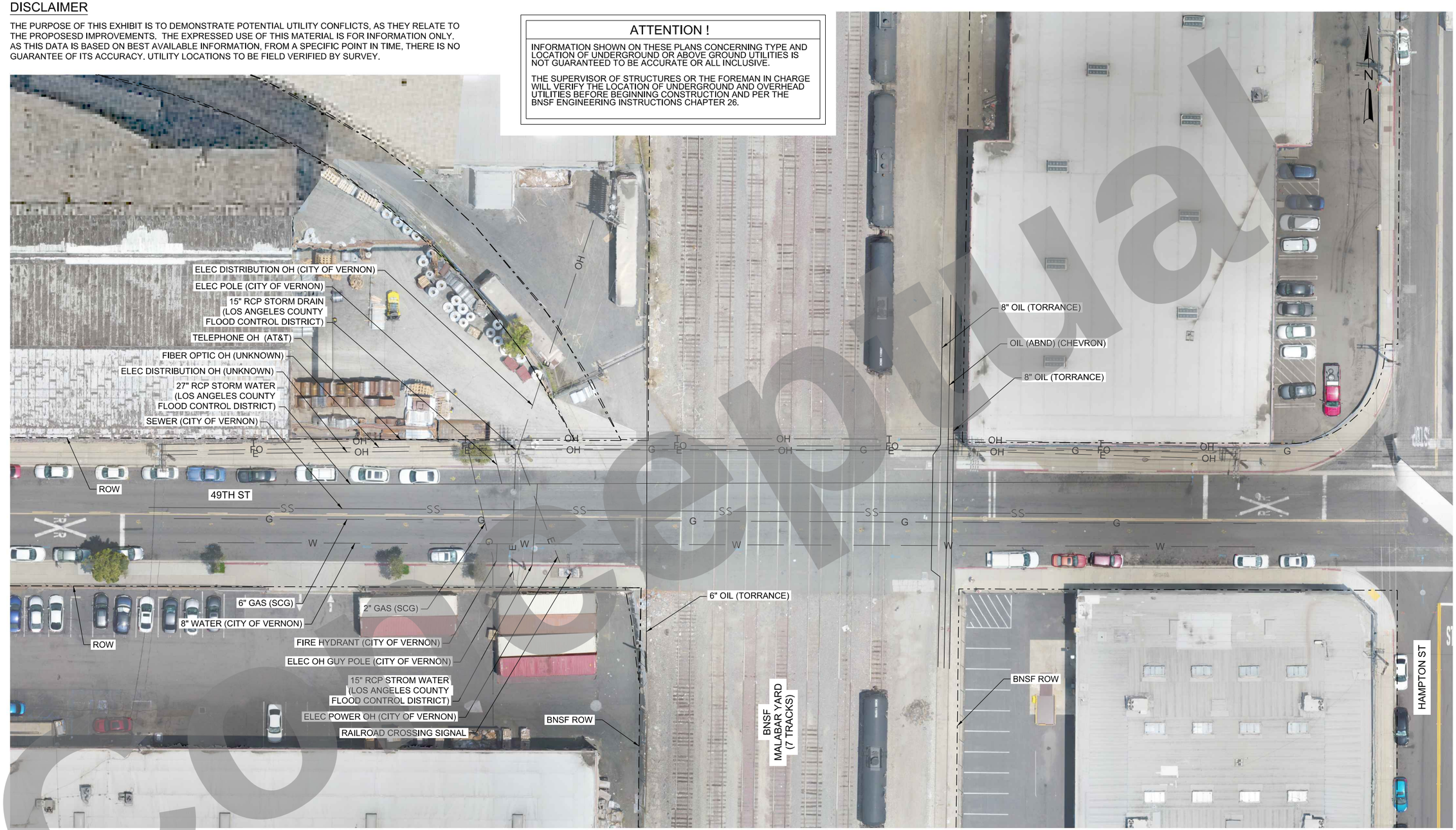

NOT FOR CONSTRUCTION

SERIES UT02 OF UT02

PLOT DATE: 2/26/2021 5:17:15 PM WSTEBOK

HDR Engineering, Inc.
2280 Market Street, Suite 100
Riverside, CA 92501-2110
951-320-7300
www.hdrinc.com

ISSUE	DATE	DESCRIPTION
1A	02/26/21	10% CONCEPTUAL PLANS (DESIGN ALTERNATIVES)
1	06/30/20	10% CONCEPTUAL PLANS

BNSF CALL BEFORE YOU DIG # 1-800-422-4133

Underground Service Alert
Call 811
Before You Dig
TWO WORKING DAYS BEFORE YOU DIG

BNSF RAILWAY

HARBOR AND SAN BERNARDINO SUBDIVISION

DESIGNED:	HDR-BK
CHECKED:	HDR-BK
DRAWN:	HDR-JS
CHECKED:	HDR-EC
DATE:	FEBRUARY 26, 2021
AUTH:	
LINE SEG:	7604/7665

BNSF RAILWAY - HARBOR AND SAN BERNARDINO SUBDIVISION - BETWEEN TRACKS 7604-2750 AND 7665-1010

MALABAR YARD/49TH ST CLOSURE EXISTING UTILITIES

FILENAME	16542-MALA-U-UT02.dgn
SCALE	(FULL-SIZE) - AS NOTED

SHEET 5 OF 16

Conceptual

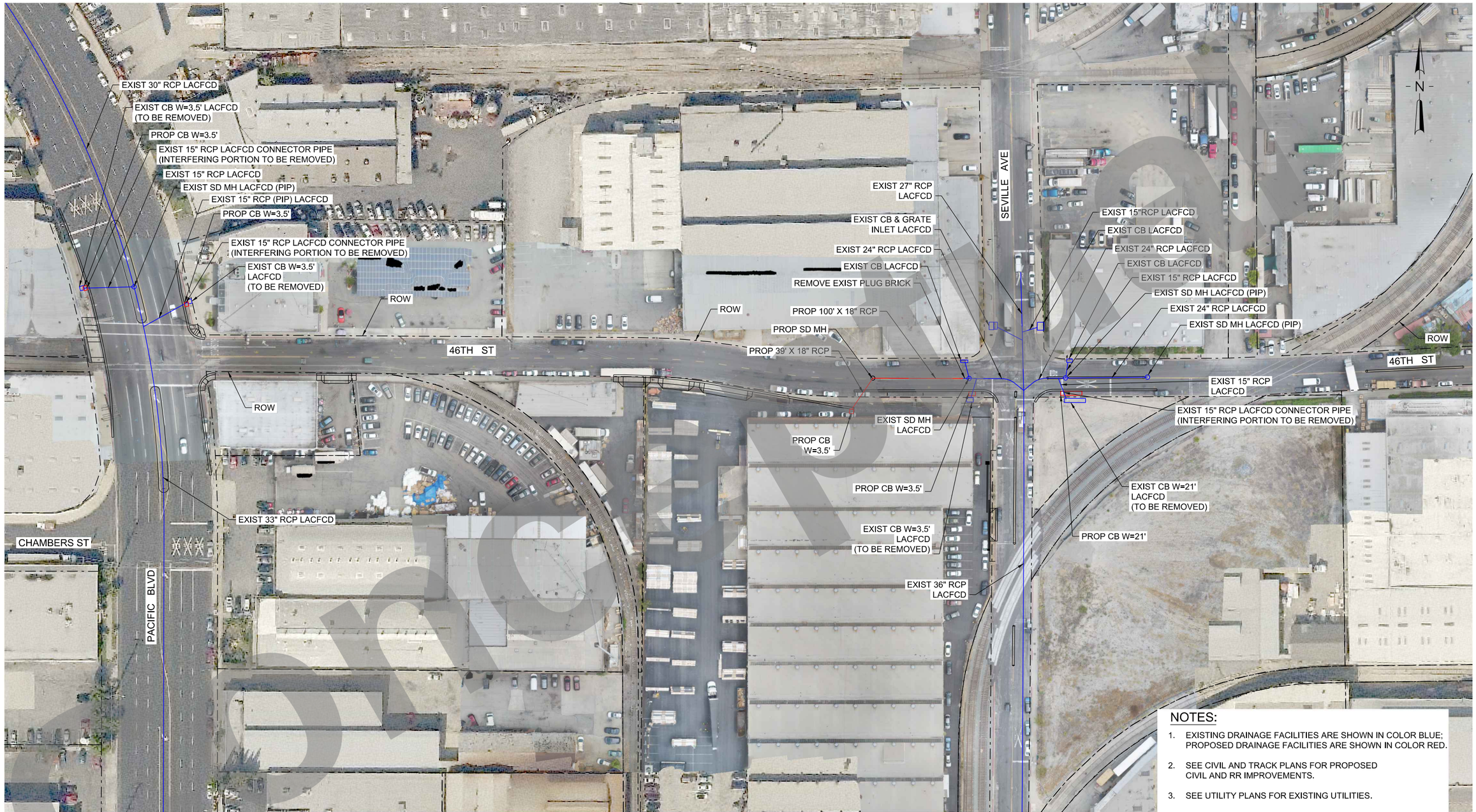

NOTES:

1. EXISTING DRAINAGE FACILITIES ARE SHOWN IN COLOR BLUE; PROPOSED DRAINAGE FACILITIES ARE SHOWN IN COLOR RED.
2. SEE CIVIL AND TRACK PLANS FOR PROPOSED CIVIL AND RR IMPROVEMENTS.
3. SEE UTILITY PLANS FOR EXISTING UTILITIES.

50 25 0 50 100
SCALE: 1" = 50'

NOT FOR CONSTRUCTION

SERIES SD01 OF SD02

HDR Engineering, Inc.
2280 Market Street, Suite 100
Riverside, CA 92501-2110
951-320-7300
www.hdrinc.com

ISSUE	DATE	DESCRIPTION
1A	02/26/21	10% CONCEPTUAL PLANS (DESIGN ALTERNATIVES)
1	06/30/20	10% CONCEPTUAL PLANS

BNSF CALL BEFORE YOU DIG # 1-800-422-4133

Underground Service Alert
Call 811
Before You Dig
TWO WORKING DAYS BEFORE YOU DIG

HARBOR AND SAN BERNARDINO SUBDIVISION

DESIGNED:	HDR-FZ
CHECKED:	HDR-LV
DRAWN:	HDR-AA
CHECKED:	HDR-EC
DATE:	FEBRUARY 26, 2021
AUTH:	
LINE SEG:	7604/7665

BNSF RAILWAY - HARBOR AND SAN BERNARDINO SUBDIVISION - BETWEEN TRACKS 7604-2750 AND 7665-1010

LAJ CONNECTOR/46TH STREET EXISTING/PROPOSED DRAINAGE

FILENAME	16542-LAJ-SD-01.dgn
SCALE	(FULL-SIZE) - AS NOTED

SHEET 6 OF 16

PLOT DATE: 2/26/2021 5:17:51 PM WSTEBOK

Original



NOTES:

1. EXISTING DRAINAGE FACILITIES ARE SHOWN IN COLOR BLUE; PROPOSED DRAINAGE FACILITIES ARE SHOWN IN COLOR RED.
2. SEE CIVIL AND TRACK PLANS FOR PROPOSED CIVIL AND RR IMPROVEMENTS.
3. SEE UTILITY PLANS FOR EXISTING UTILITIES.

20 10 0 20 40
SCALE: 1" = 20'

NOT FOR CONSTRUCTION

SERIES SD02 OF SD02

Concept

PLOT DATE: 2/26/2021 5:18:10 PM WSTEBOK

HDR Engineering, Inc.
2280 Market Street, Suite 100
Riverside, CA 92501-2110
951-320-7300
www.hdrinc.com

ISSUE	DATE	DESCRIPTION
1A	02/26/21	10% CONCEPTUAL PLANS (DESIGN ALTERNATIVES)
1	06/30/20	10% CONCEPTUAL PLANS

BNSF CALL BEFORE YOU DIG # 1-800-422-4133

Underground Service Alert
Call 811
Before You Dig
TWO WORKING DAYS BEFORE YOU DIG

BNSF RAILWAY

HARBOR AND SAN BERNARDINO SUBDIVISION

DESIGNED:	HDR-FZ
CHECKED:	HDR-LV
DRAWN:	HDR-AA
CHECKED:	HDR-EC
DATE:	FEBRUARY 26, 2021
AUTH:	
LINE SEG:	7604/7665

BNSF RAILWAY - HARBOR AND SAN BERNARDINO SUBDIVISION - BETWEEN TRACKS 7604-2750 AND 7665-1010

MALABAR YARD/49TH ST CLOSURE EXISTING/PROPOSED DRAINAGE

FILENAME	16542-MALA-SD-01.dgn	SHEET	7 OF 16
SCALE	(FULL-SIZE) - AS NOTED		

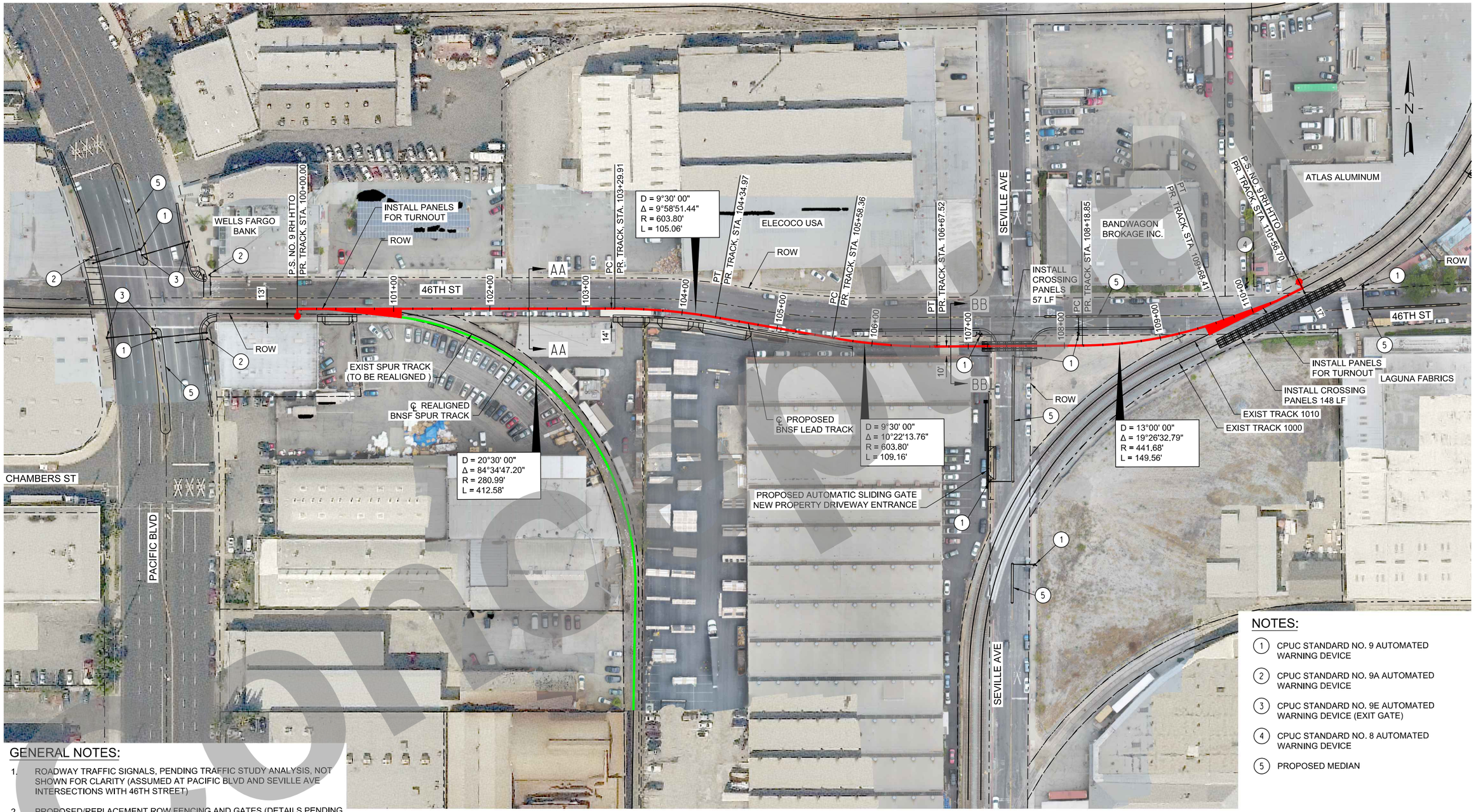

GENERAL NOTES:

1. ROADWAY TRAFFIC SIGNALS, PENDING TRAFFIC STUDY ANALYSIS, NOT SHOWN FOR CLARITY (ASSUMED AT PACIFIC BLVD AND SEVILLE AVE INTERSECTIONS WITH 46TH STREET)
2. PROPOSED/REPLACEMENT ROW FENCING AND GATES (DETAILS PENDING STAKEHOLDER COORDINATION)

NOTES:

1. CPUC STANDARD NO. 9 AUTOMATED WARNING DEVICE
2. CPUC STANDARD NO. 9A AUTOMATED WARNING DEVICE
3. CPUC STANDARD NO. 9E AUTOMATED WARNING DEVICE (EXIT GATE)
4. CPUC STANDARD NO. 8 AUTOMATED WARNING DEVICE
5. PROPOSED MEDIAN

50 25 0 50 100
SCALE: 1" = 50'

NOT FOR CONSTRUCTION

SERIES P01 OF P02

HDR Engineering, Inc.
2280 Market Street, Suite 100
Riverside, CA 92501-2110
951-320-7900
www.hdrinc.com

ISSUE	DATE	DESCRIPTION
1A	02/26/21	10% CONCEPTUAL PLANS (DESIGN ALTERNATIVES)
1	06/30/20	10% CONCEPTUAL PLANS

BNSF CALL BEFORE YOU DIG # 1-800-422-4133

Underground Service Alert
Call 811
Before You Dig
TWO WORKING DAYS BEFORE YOU DIG

BNSF RAILWAY

HARBOR AND SAN BERNARDINO SUBDIVISION

DESIGNED:	HDR-BR
CHECKED:	HDR-EC
DRAWN:	HDR-WS
CHECKED:	HDR-BR
DATE:	FEBRUARY 26, 2021
AUTH:	
LINE SEG:	7604/7665

BNSF RAILWAY - HARBOR AND SAN BERNARDINO
SUBDIVISION - BETWEEN TRACKS 7604-2750 AND 7665-1010

TRACK PLAN

FILENAME	16542_LAJ-R-LD-P01.dgn
SCALE	(FULL-SIZE) - AS NOTED

SHEET 8 OF 16

PLOT DATE: 2/26/2021 5:18:18 PM WSTEBOK

Confidential

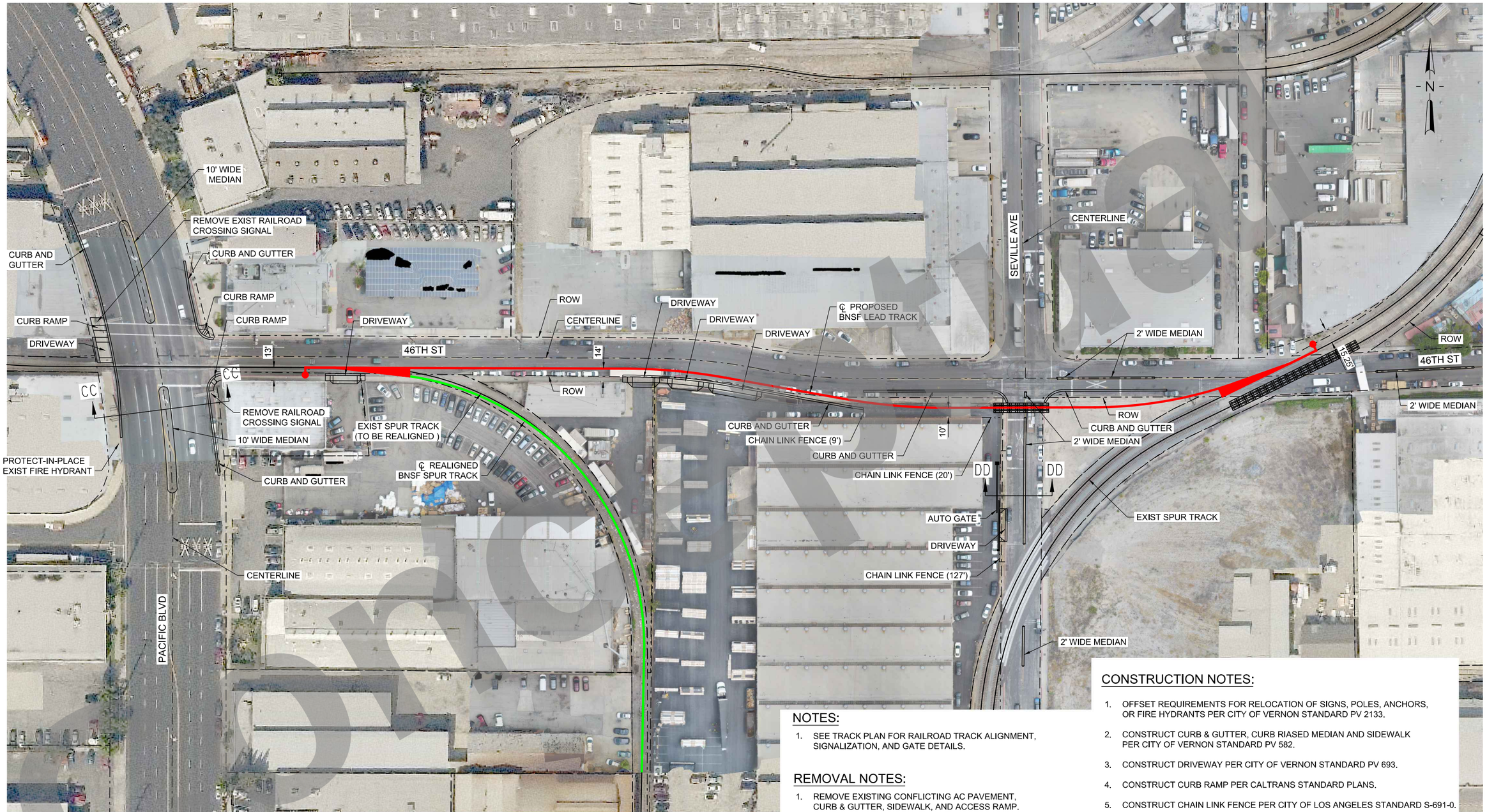

NOTES:

1. SEE TRACK PLAN FOR RAILROAD TRACK ALIGNMENT, SIGNALIZATION, AND GATE DETAILS.

REMOVAL NOTES:

1. REMOVE EXISTING CONFLICTING AC PAVEMENT, CURB & GUTTER, SIDEWALK, AND ACCESS RAMP.

CONSTRUCTION NOTES:

1. OFFSET REQUIREMENTS FOR RELOCATION OF SIGNS, POLES, ANCHORS, OR FIRE HYDRANTS PER CITY OF VERNON STANDARD PV 2133.
2. CONSTRUCT CURB & GUTTER, CURB RIASED MEDIAN AND SIDEWALK PER CITY OF VERNON STANDARD PV 582.
3. CONSTRUCT DRIVEWAY PER CITY OF VERNON STANDARD PV 693.
4. CONSTRUCT CURB RAMP PER CALTRANS STANDARD PLANS.
5. CONSTRUCT CHAIN LINK FENCE PER CITY OF LOS ANGELES STANDARD S-691-0.

50 25 0 50 100
SCALE: 1" = 50'

NOT FOR CONSTRUCTION

SERIES P02 OF P02

PLOT DATE: 2/26/2021 5:18:39 PM WSTEBOK

HDR Engineering, Inc.
2280 Market Street, Suite 100
Riverside, CA 92501-2110
951-320-7300
www.hdrinc.com

ISSUE	DATE	DESCRIPTION
1A	02/26/21	10% CONCEPTUAL PLANS (DESIGN ALTERNATIVES)
1	06/30/20	10% CONCEPTUAL PLANS

BNSF CALL BEFORE YOU DIG # 1-800-422-4133

Underground Service Alert
Call 811
Before You Dig
TWO WORKING DAYS BEFORE YOU DIG

BNSF RAILWAY

HARBOR AND SAN BERNARDINO SUBDIVISION

DESIGNED:	HDR-BK
CHECKED:	HDR-BK
DRAWN:	HDR-JS
CHECKED:	HDR-EC
DATE:	FEBRUARY 26, 2021
AUTH:	
LINE SEG:	7604/7665

BNSF RAILWAY - HARBOR AND SAN BERNARDINO SUBDIVISION - BETWEEN TRACKS 7604-2750 AND 7665-1010

CIVIL PLAN

FILENAME	16542-LAJ-C-P02.dgn
SCALE	(FULL-SIZE) - AS NOTED

SHEET 9 OF 16

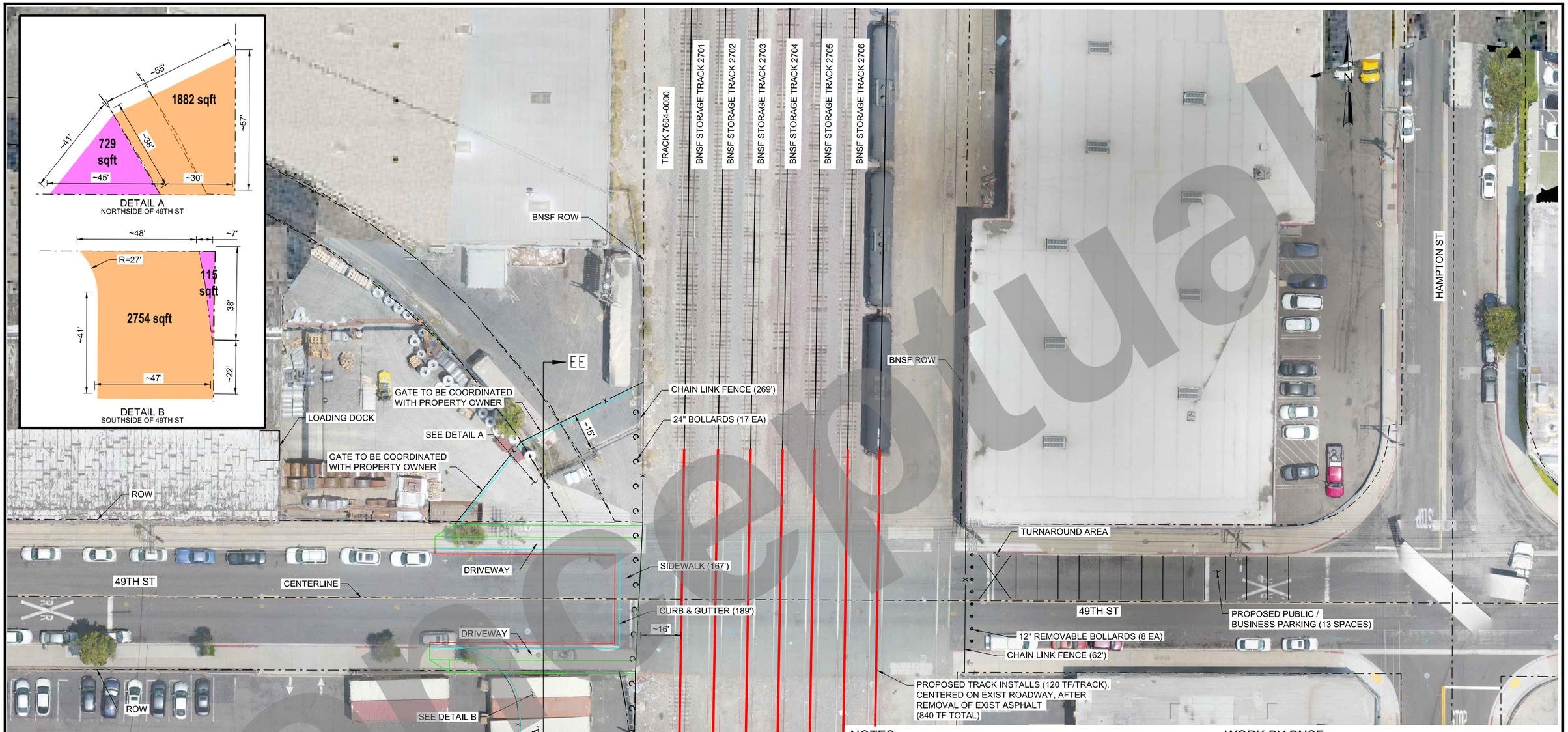

NOTES:

1. WB-62 STANDARD TRUCK TEMPLATE IS USED TO DETERMINE THE WIDTH OF DRIVEWAY FOR ACCESSING THE BUSINESS PROPERTIES ON THE NORTH SIDE, BASED ON BACK-IN MOVEMENT.

CONSTRUCTION NOTES:

1. OFFSET REQUIREMENTS FOR RELOCATION OF SIGNS, POLES, ANCHORS, OR FIRE HYDRANTS PER CITY OF VERNON STANDARD PV 2133.
2. CONSTRUCT CURB & GUTTER AND SIDEWALK PER CITY OF VERNON STANDARD PV 582.
3. CONSTRUCT DRIVEWAY PER CITY OF VERNON STANDARD PV 693.
4. CONSTRUCT CHAIN LINK FENCE PER CITY OF LOS ANGELES STANDARD S-691-0.

WORK BY BNSF

1. REMOVE EXISTING RAILROAD CROSSING SIGNAL.
2. EXISTING TRACK (120' TF/TRACK) AT EXISTING CROSSING TO BE REPLACED BY BNSF FORCES.

REMOVAL NOTES:

1. REMOVE EXISTING CONFLICTING AC PAVEMENT, CURB & GUTTER, SIDEWALK, AND FENCE. REMOVE AND CONSTRUCT NEW AC PAVEMENT, MATCH EXISTING SECTION (MINIMUM 8"AC / 6" AB).

20 10 0 20 40
SCALE: 1" = 20'

NOT FOR CONSTRUCTION

SERIES RD01 OF RD03

PLOT DATE: 2/26/2021 5:19:00 PM WSTEBOK

HDR Engineering, Inc.
2280 Market Street, Suite 100
Riverside, CA 92501-2110
951-320-7300
www.hdrinc.com

ISSUE	DATE	DESCRIPTION
1A	02/26/21	10% CONCEPTUAL PLANS (DESIGN ALTERNATIVES)
1	06/30/20	10% CONCEPTUAL PLANS

BNSF CALL BEFORE YOU DIG # 1-800-422-4133

Underground Service Alert
Call 811
Before You Dig
TWO WORKING DAYS BEFORE YOU DIG

BNSF RAILWAY

HARBOR AND SAN BERNARDINO SUBDIVISION

DESIGNED:	HDR-BK
CHECKED:	HDR-BK
DRAWN:	HDR-IS
CHECKED:	HDR-EC
DATE:	FEBRUARY 26, 2021
AUTH:	
LINE SEG:	7604/7665

BNSF RAILWAY - HARBOR AND SAN BERNARDINO SUBDIVISION - BETWEEN TRACKS 7604-2750 AND 7665-1010

MALABAR YARD/49TH ST CLOSURE GRADE CROSSING

FILENAME	16542-MALA-C-RD01.dgn
SCALE	(FULL-SIZE) - AS NOTED
SHEET	10 OF 16

Preliminary

NOTES:

1. SEE TRACK PLAN FOR RAILROAD TRACK ALIGNMENT, SIGNALIZATION, AND GATE DETAILS.

REMOVAL NOTES:

1. REMOVE EXISTING CONFLICTING AC PAVEMENT, CURB & GUTTER, SIDEWALK, AND ACCESS RAMP.
2. WET SANDBLAST AND REMOVE EXISTING CONFLICTING STRIPES AND/OR PAVEMENT MARKINGS.
3. REMOVE EXISTING CONFLICTING ROAD SIGN AND/OR POST.

CONSTRUCTION NOTES:

1. OFFSET REQUIREMENTS FOR RELOCATION OF SIGNS, POLES, ANCHORS, OR FIRE HYDRANTS PER CITY OF VERNON STANDARD PV 2133.
2. CONSTRUCT CURB & GUTTER, CURB RAISED MEDIAN AND SIDEWALK PER CITY OF VERNON STANDARD PV 582.
3. CONSTRUCT CURB RAMP PER CALTRANS STANDARD PLANS.
4. INSTALL PAVEMENT STRIPES, MARKINGS, AND ROAD SIDE SIGNS PER CA MUTCD STANDARD DETAILS.

SIGNAGE REFERENCES

OM2-1H
TYPE 2 OBJECT MARKER

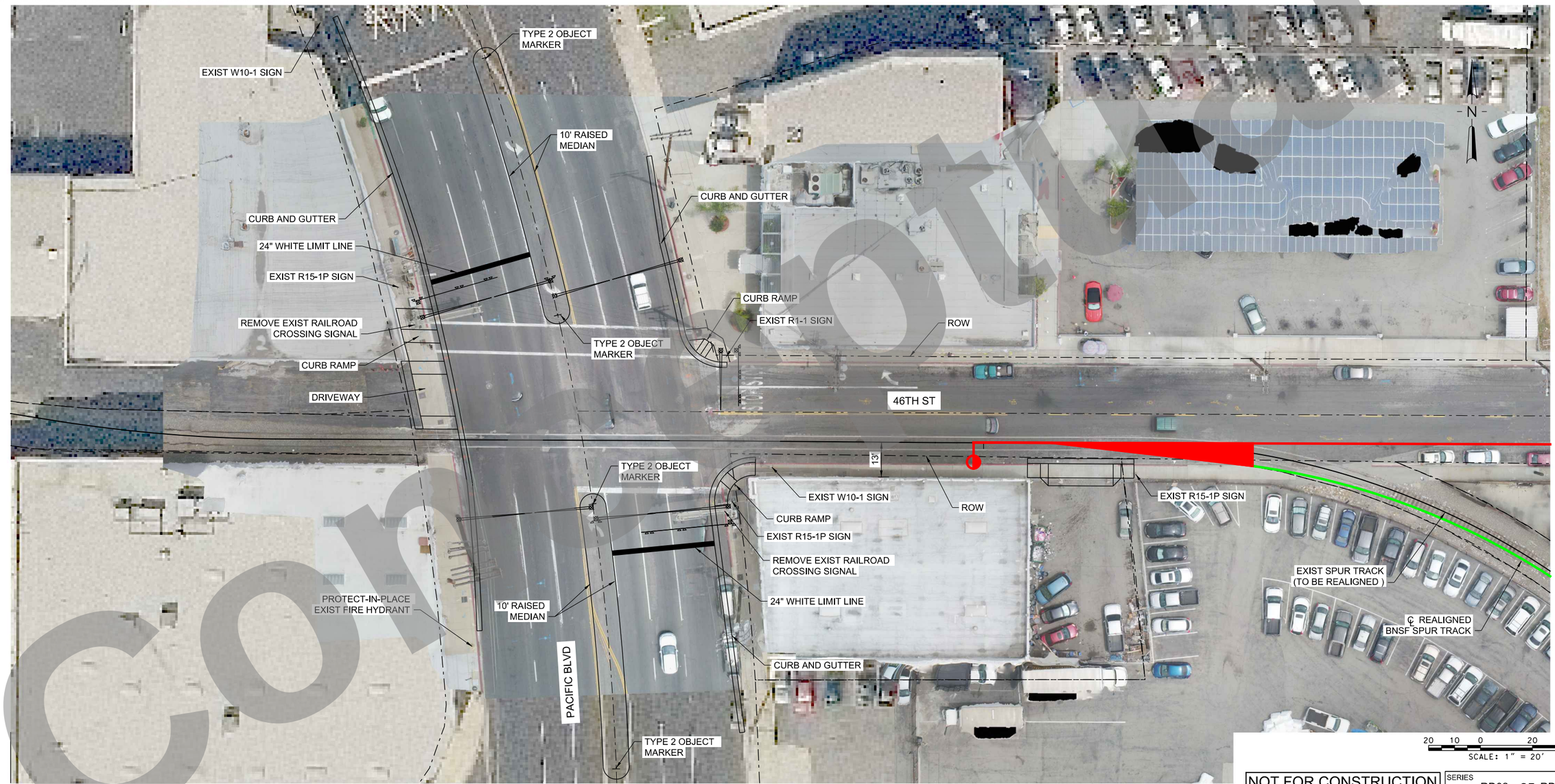

NOT FOR CONSTRUCTION

SERIES RD02 OF RD03

PLOT DATE: 2/26/2021 5:19:23 PM WSTEBOK

HDR Engineering, Inc.
2280 Market Street, Suite 100
Riverside, CA 92501-2110
951-320-7300
www.hdrinc.com

ISSUE	DATE	DESCRIPTION
1A	02/26/21	10% CONCEPTUAL PLANS (DESIGN ALTERNATIVES)
1	06/30/20	10% CONCEPTUAL PLANS

BNSF CALL BEFORE YOU DIG # 1-800-422-4133

Underground Service Alert
Call 811
Before You Dig
TWO WORKING DAYS BEFORE YOU DIG

BNSF RAILWAY

HARBOR AND SAN BERNARDINO SUBDIVISION

DESIGNED:	HDR-BK
CHECKED:	HDR-BK
DRAWN:	HDR-IS
CHECKED:	HDR-EC
DATE:	FEBRUARY 26, 2021
AUTH:	
LINE SEG:	7604/7665

BNSF RAILWAY - HARBOR AND SAN BERNARDINO
SUBDIVISION - BETWEEN TRACKS 7604-2750 AND 7665-1010

PACIFIC BLVD AND 46TH STREET GRADE CROSSING

FILENAME	16542-LAJ-C-RD02.dgn
SCALE	(FULL-SIZE) - AS NOTED
SHEET	11 OF 16

NOTES:

1. SEE TRACK PLAN FOR RAILROAD TRACK ALIGNMENT, SIGNALIZATION, AND GATE DETAILS.

REMOVAL NOTES:

1. REMOVE EXISTING CONFLICTING AC PAVEMENT, CURB & GUTTER, SIDEWALK, AND ACCESS RAMP.
2. WET SANDBLAST AND REMOVE EXISTING CONFLICTING STRIPES AND/OR PAVEMENT MARKINGS.
3. REMOVE EXISTING CONFLICTING ROAD SIGN AND/OR POST.

CONSTRUCTION NOTES:

1. OFFSET REQUIREMENTS FOR RELOCATION OF SIGNS, POLES, ANCHORS, OR FIRE HYDRANTS TO BE PER CITY OF VERNON STANDARD PV 2133.
2. CONSTRUCT CURB & GUTTER, CURB RAISED MEDIAN AND SIDEWALK PER CITY OF VERNON STANDARD PV 582.
3. CONSTRUCT CURB RAMP PER CALTRANS STANDARD PLANS.
4. INSTALL PAVEMENT STRIPES, MARKINGS, AND ROAD SIDE SIGNS PER CA MUTCD STANDARD DETAILS.

SIGNAGE REFERENCES

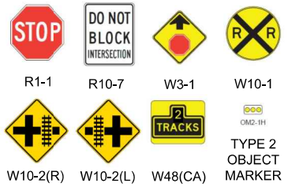

R1-1 | R10-7 | W3-1 | W10-1 | W10-2(R) | W10-2(L) | W48(CA) | TYPE 2 OBJECT MARKER

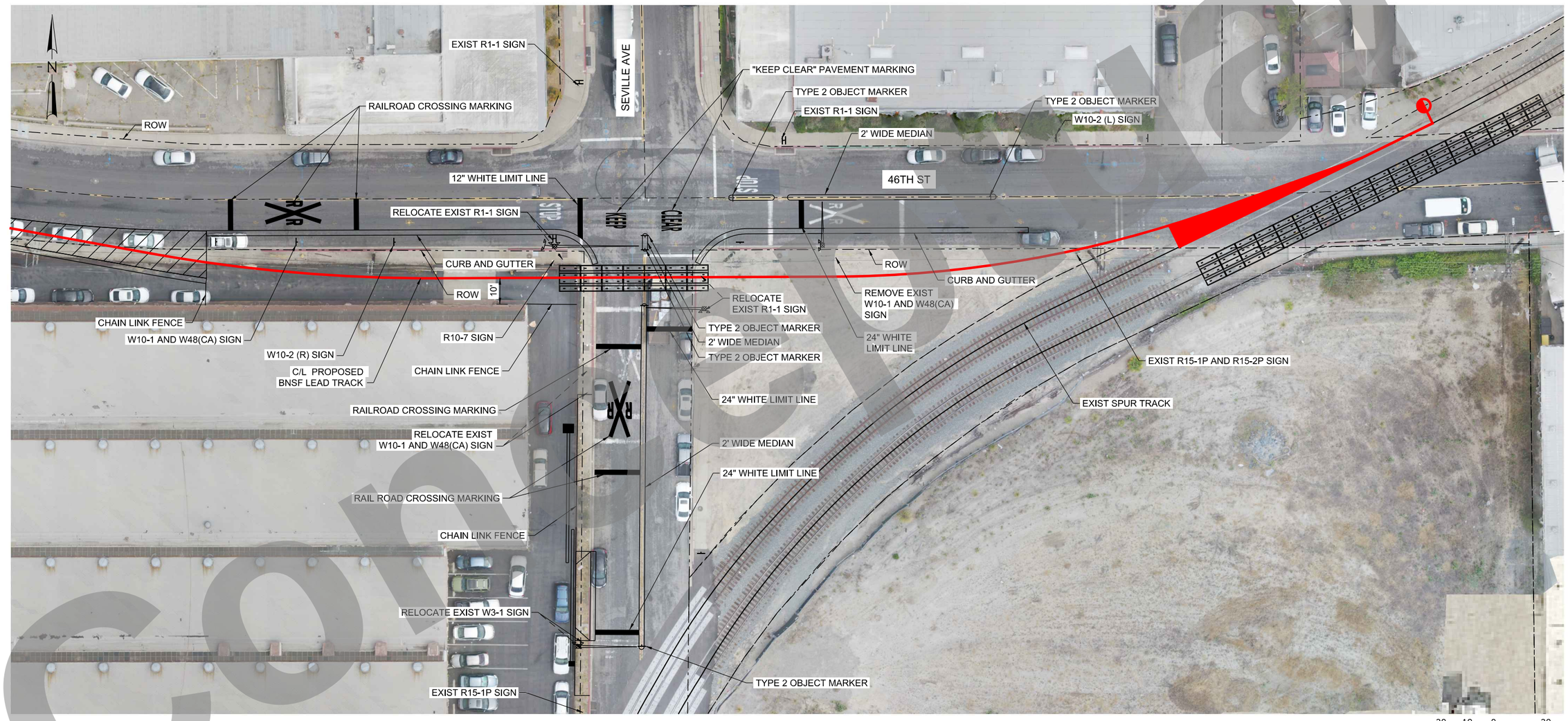

20 10 0 20 40
SCALE: 1" = 20'

NOT FOR CONSTRUCTION

SERIES RD03 OF RD03

HDR Engineering, Inc.
2280 Market Street, Suite 100
Riverside, CA 92501-2110
951-320-7300
www.hdrinc.com

ISSUE	DATE	DESCRIPTION
1A	02/26/21	10% CONCEPTUAL PLANS (DESIGN ALTERNATIVES)
1	06/30/20	10% CONCEPTUAL PLANS

BNSF CALL BEFORE YOU DIG # 1-800-422-4133

Underground Service Alert
Call 811
Before You Dig
TWO WORKING DAYS BEFORE YOU DIG

BNSF RAILWAY

HARBOR AND SAN BERNARDINO SUBDIVISION

DESIGNED:	HDR-BK
CHECKED:	HDR-BK
DRAWN:	HDR-IS
CHECKED:	HDR-EC
DATE:	FEBRUARY 26, 2021
AUTH:	
LINE SEG:	7604/7665

BNSF RAILWAY - HARBOR AND SAN BERNARDINO SUBDIVISION - BETWEEN TRACKS 7604-2750 AND 7665-1010

SEVILLE AVE AND 46TH ST GRADE CROSSING

FILENAME	16542-LAJ-C-RD03.dgn
SCALE	(FULL-SIZE) - AS NOTED

SHEET 12 OF 16

PLOT DATE: 2/26/2021 5:20:15 PM WSTEBOK

concept

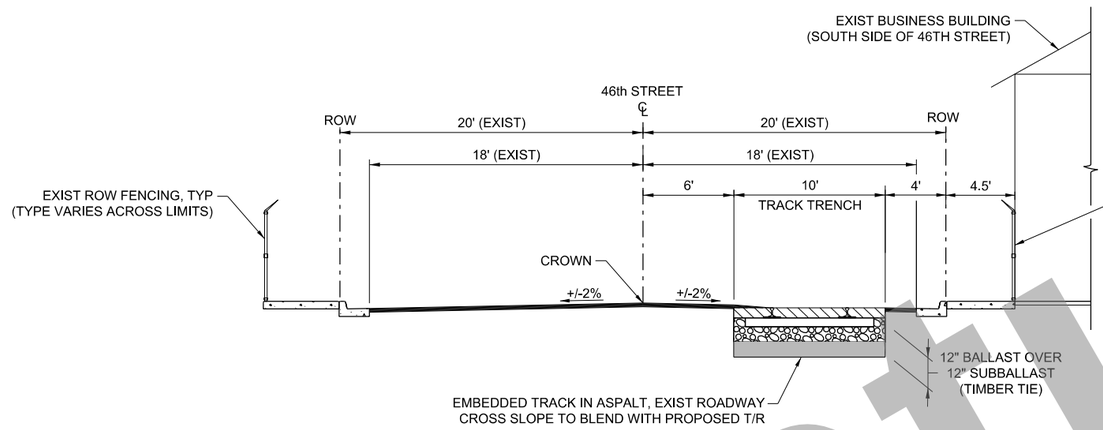

TYPICAL SECTION - ASPHALT EMBEDDED TRACK (RIGHT) — AA / P01

NOT TO SCALE
(VIEW LOOKING EAST)

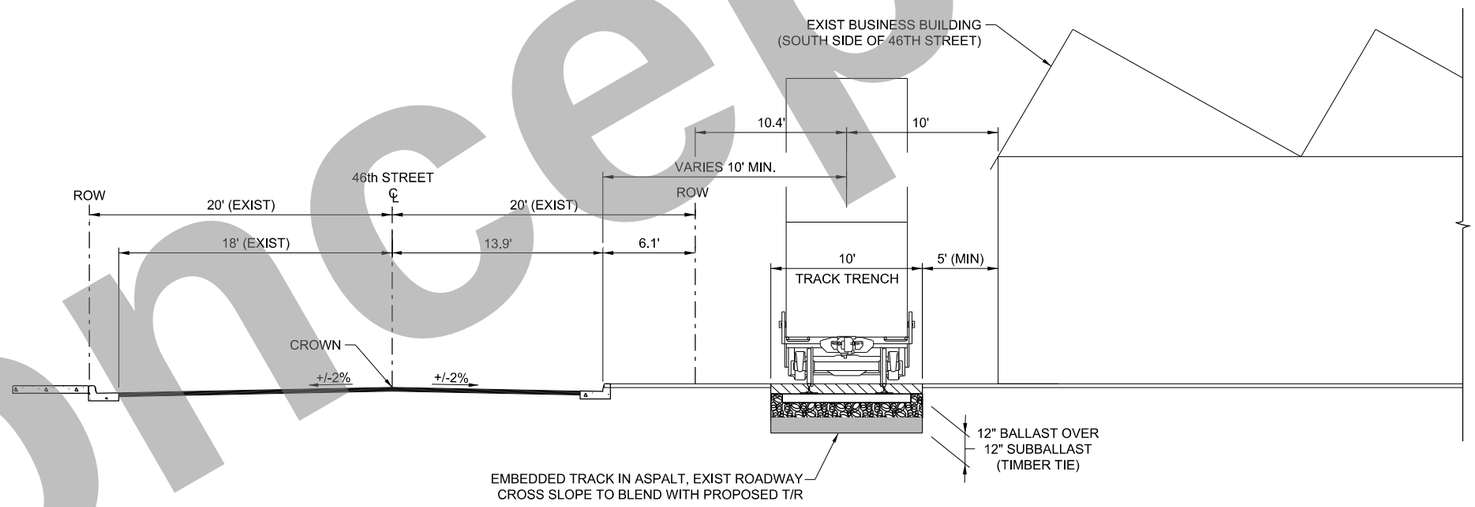

TYPICAL SECTION - ASPHALT EMBEDDED TRACK
OUTSIDE OF ROADWAY SECTION — BB / P01

NOT TO SCALE
(VIEW LOOKING EAST)

Conceptual

NOT FOR CONSTRUCTION

SERIES TS01 OF TS02

PLOT DATE: 2/26/2021 5:20:38 PM WSTEBOK

HDR Engineering, Inc.
2280 Market Street, Suite 100
Riverside, CA 92501-2110
951-320-7300
www.hdrinc.com

ISSUE	DATE	DESCRIPTION
1A	02/26/21	10% CONCEPTUAL PLANS (DESIGN ALTERNATIVES)
1	06/30/20	10% CONCEPTUAL PLANS

BNSF CALL BEFORE YOU DIG # 1-800-422-4133

Underground Service Alert
Call 811
Before You Dig
TWO WORKING DAYS BEFORE YOU DIG

BNSF RAILWAY

HARBOR AND SAN BERNARDINO SUBDIVISION

DESIGNED:	HDR-BR
CHECKED:	HDR-EC
DRAWN:	HDR-WS
CHECKED:	HDR-BR
DATE:	FEBRUARY 26, 2021
AUTH:	
LINE SEG:	7604/7665

BNSF RAILWAY - HARBOR AND SAN BERNARDINO
SUBDIVISION - BETWEEN TRACKS 7604-2750 AND 7665-1010

RAIL TYPICAL SECTIONS

FILENAME	16542_LAJ-R-TS01.dgn
SCALE	(FULL-SIZE) - AS NOTED

SHEET 13 OF 16

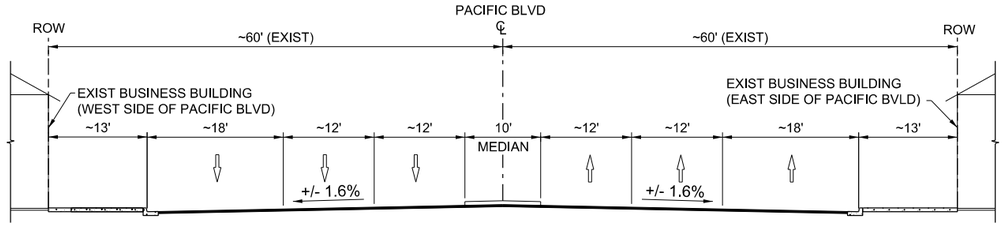

TYPICAL SECTION - PACIFIC BLVD (CC, P02)

NOT TO SCALE
(VIEW LOOKING NORTH)

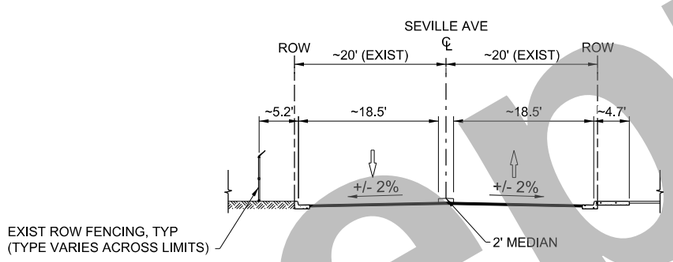

TYPICAL SECTION - SEVILLE AVE (DD, P02)

NOT TO SCALE
(VIEW LOOKING NORTH)

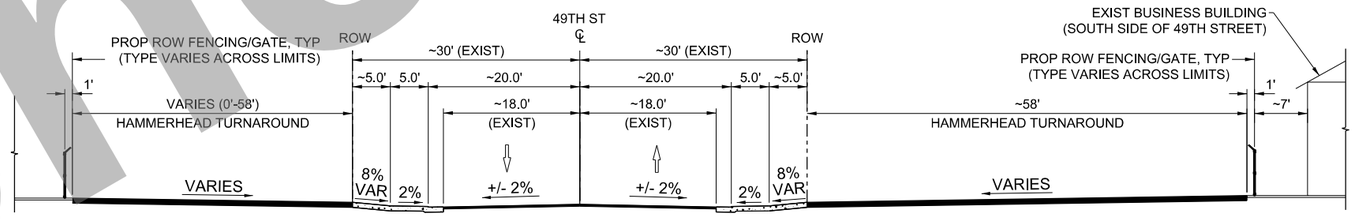

TYPICAL SECTION - 49TH ST (EE, RD01)

NOT TO SCALE
(VIEW LOOKING EAST)

Conceptual

NOT FOR CONSTRUCTION

SERIES TS02 OF TS02

PLOT DATE: 2/26/2021 5:20:45 PM WSTEBOK

HDR Engineering, Inc.
2280 Market Street, Suite 100
Riverside, CA 92501-2110
951-320-7300
www.hdrinc.com

ISSUE	DATE	DESCRIPTION
1A	02/26/21	10% CONCEPTUAL PLANS (DESIGN ALTERNATIVES)
1	06/30/20	10% CONCEPTUAL PLANS

BNSF CALL BEFORE YOU DIG # 1-800-422-4133

Underground Service Alert
Call 811
Before You Dig
TWO WORKING DAYS BEFORE YOU DIG

BNSF RAILWAY

HARBOR AND SAN BERNARDINO SUBDIVISION

DESIGNED:	HDR-AK
CHECKED:	HDR-BK
DRAWN:	HDR-AK
CHECKED:	HDR-EC
DATE:	FEBRUARY 26, 2021
AUTH:	
LINE SEG:	7604/7665

BNSF RAILWAY - HARBOR AND SAN BERNARDINO SUBDIVISION - BETWEEN TRACKS 7604-2750 AND 7665-1010

CIVIL TYPICAL SECTIONS

FILENAME	16542_MALA-C-TS02.dgn
SCALE	(FULL-SIZE) - AS NOTED

SHEET 14 OF 16

CONSTRUCTION NOTES

1. INSTALL PAVEMENT STRIPES, MARKINGS, AND ROAD SIDE SIGNS PER CA MUTCD STANDARD DETAILS.

REMOVAL NOTES

1. WET SANDBLAST AND REMOVE EXISTING CONFLICTING STRIPES AND/OR PAVEMENT MARKINGS.
2. REMOVE EXISTING CONFLICTING ROAD SIGN AND/OR POST.

SIGNAGE REFERENCES



50 25 0 50 100
SCALE: 1" = 50'

NOT FOR CONSTRUCTION

SERIES SS01 OF SS02

PLOT DATE: 2/26/2021 5:21:18 PM WSTEBOK

HDR Engineering, Inc.
2280 Market Street, Suite 100
Riverside, CA 92501-2110
951-320-7300
www.hdrinc.com

ISSUE	DATE	DESCRIPTION
1A	02/26/21	10% CONCEPTUAL PLANS (DESIGN ALTERNATIVES)
1	06/30/20	10% CONCEPTUAL PLANS

BNSF CALL BEFORE YOU DIG # 1-800-422-4133

Underground Service Alert
Call 811
Before You Dig
TWO WORKING DAYS BEFORE YOU DIG

BNSF RAILWAY

HARBOR AND SAN BERNARDINO SUBDIVISION

DESIGNED:	HDR-BK
CHECKED:	HDR-BK
DRAWN:	HDR-JS
CHECKED:	HDR-EC
DATE:	FEBRUARY 26, 2021
AUTH:	
LINE SEG:	7604/7665

BNSF RAILWAY - HARBOR AND SAN BERNARDINO
SUBDIVISION - BETWEEN TRACKS 7604-2750 AND 7665-1010

LAJ CONNECTOR/46TH STREET STRIPING AND SIGNAGE

FILENAME	16542-LAJ-C-SS01.dgn
SCALE	(FULL-SIZE) - AS NOTED
SHEET	15 OF 16

Original

CONSTRUCTION NOTES

1. INSTALL PAVEMENT STRIPES, MARKINGS, AND ROAD SIDE SIGNS PER CA MUTCD STANDARD DETAILS.

REMOVAL NOTES

1. WET SANDBLAST AND REMOVE EXISTING CONFLICTING STRIPES AND/OR PAVEMENT MARKINGS.
2. REMOVE EXISTING CONFLICTING ROAD SIGN AND/OR POST.

SIGNAGE REFERENCES



W14-1

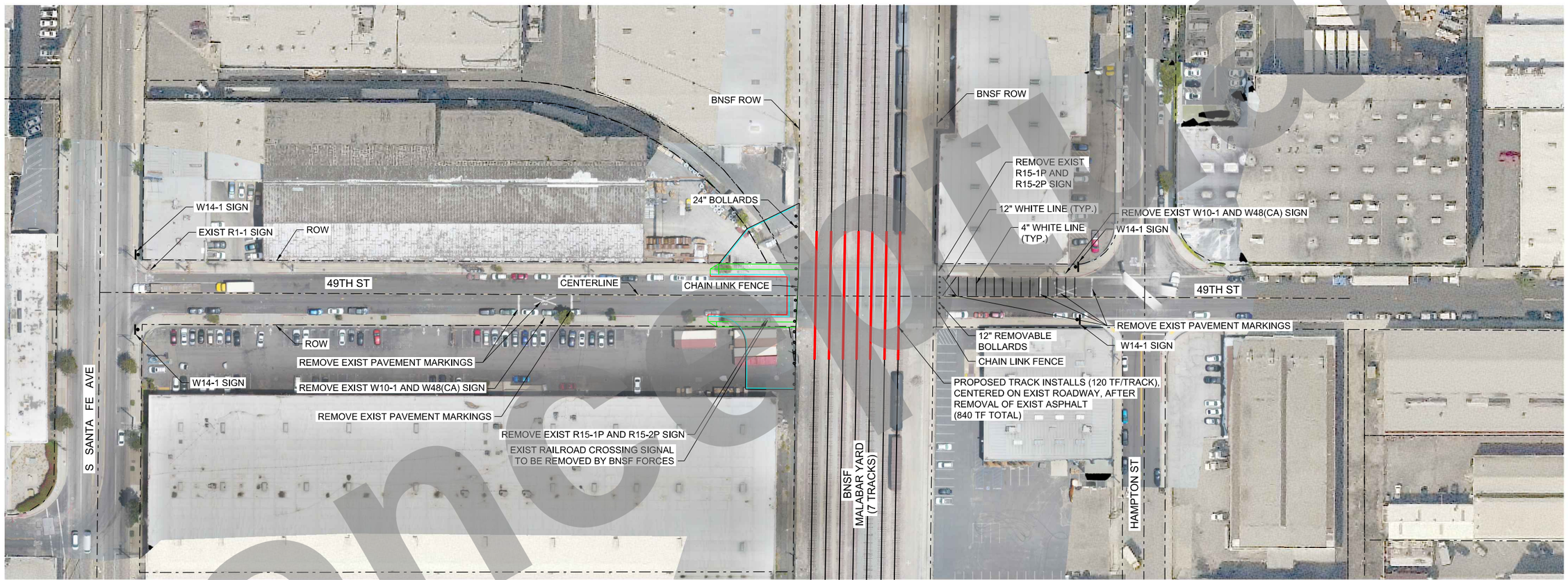

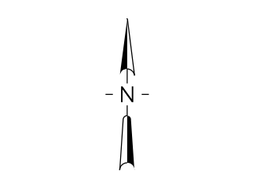

50 25 0 50 100
SCALE: 1" = 50'

NOT FOR CONSTRUCTION

SERIES SS02 OF SS02

Concept

PLOT DATE: 2/26/2021 5:21:47 PM WSTEBOK

HDR Engineering, Inc.
2280 Market Street, Suite 100
Riverside, CA 92501-2110
951-320-7300
www.hdrinc.com

ISSUE	DATE	DESCRIPTION
1A	02/26/21	10% CONCEPTUAL PLANS (DESIGN ALTERNATIVES)
1	06/30/20	10% CONCEPTUAL PLANS

BNSF CALL BEFORE YOU DIG # 1-800-422-4133

Underground Service Alert
Call 811
Before You Dig
TWO WORKING DAYS BEFORE YOU DIG

BNSF RAILWAY

HARBOR AND SAN BERNARDINO SUBDIVISION

DESIGNED:	HDR-BK
CHECKED:	HDR-BK
DRAWN:	HDR-IS
CHECKED:	HDR-EC
DATE:	FEBRUARY 26, 2021
AUTH:	
LINE SEG:	7604/7665

BNSF RAILWAY - HARBOR AND SAN BERNARDINO
SUBDIVISION - BETWEEN TRACKS 7604-2750 AND 7665-1010

MALABAR YARD/49TH ST CLOSURE STRIPING AND SIGNAGE

FILENAME	16542-MALA-C-SS02.dgn
SCALE	(FULL-SIZE) - AS NOTED

SHEET 16 OF 16