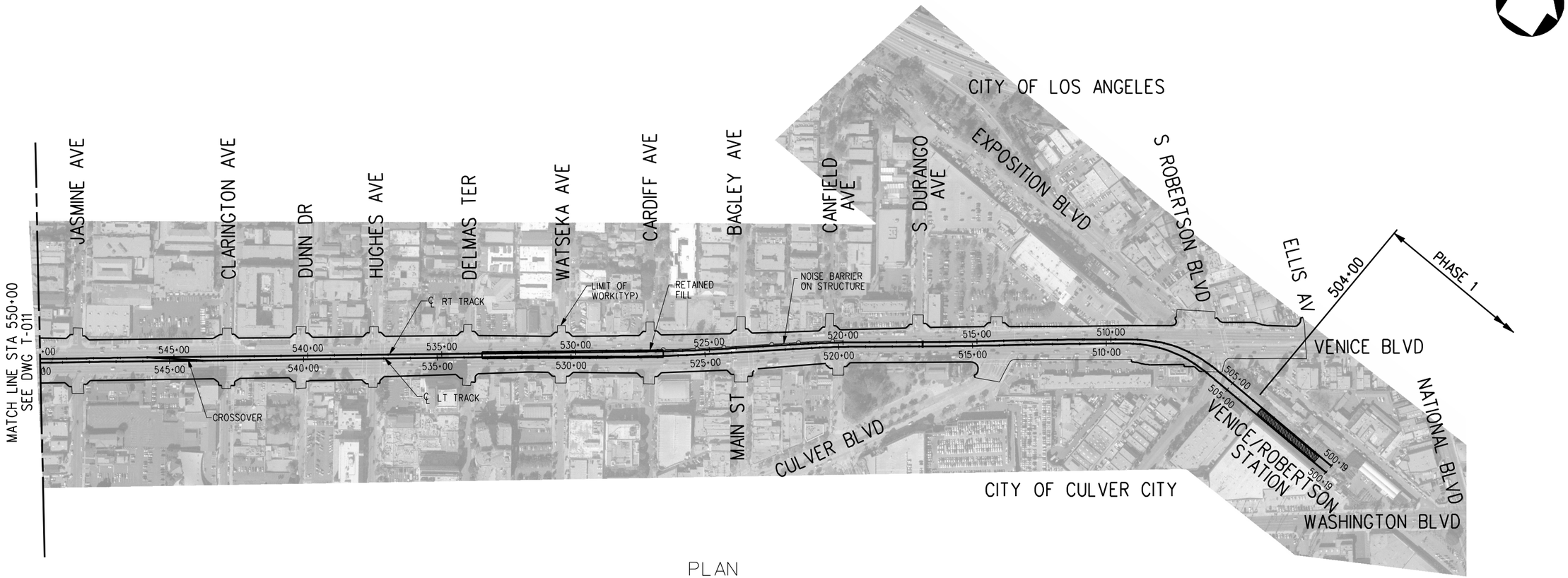

PLAN

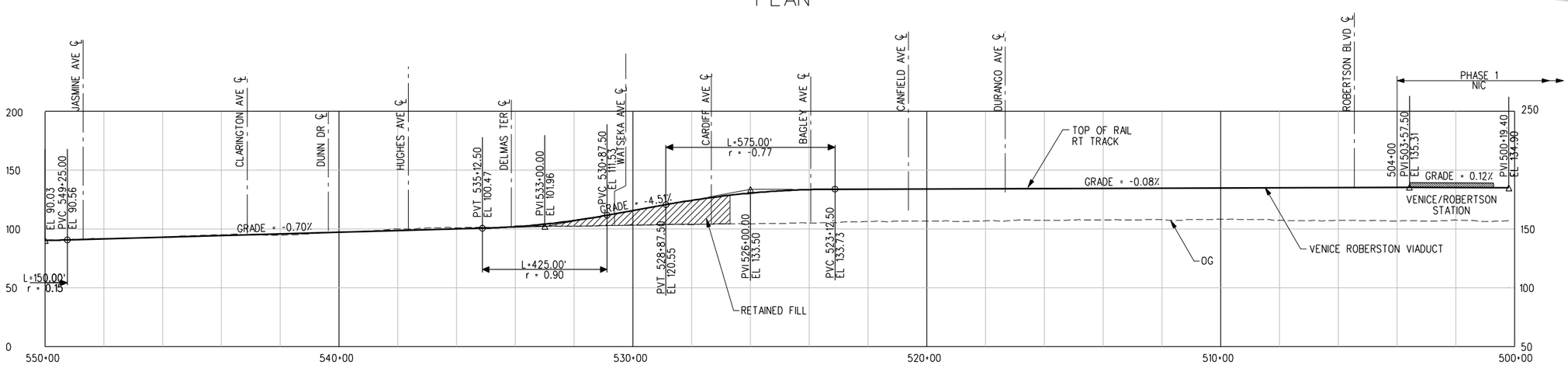

PROFILE

CONCEPTUAL ENGINEERING

50' 0 50' 100' 100' 0 200' 400'

THE PREPARATION OF THIS DRAWING HAS BEEN FINANCED BY THE TAXES OF THE CITIZENS OF LOS ANGELES COUNTY AND OF THE STATE OF CALIFORNIA.

REV	DATE	BY	APP	REG NO	EXPIRES	SEAL HOLDER	DESCRIPTION
0	1/5/09	-	-	-	-		DRAFT EIR

DESIGNED BY J. SUSILO
DRAWN BY C. NATHAN
CHECKED BY J. AVENDANO
IN CHARGE L. J. MOHR
DATE 1/5/09

Exposition Metro Line Construction Authority
Expo

DMJM HARRIS | AECOM
707 WILSHIRE BLVD, SUITE 3300
LOS ANGELES, CALIFORNIA 90017
TEL (213) 243-5500 FAX (213) 243-5552

SUBMITTED
APPROVED

EXPOSITION TRANSIT PROJECT-PHASE 2

PLAN AND PROFILE
STA 504+00 TO STA 550+00

CONTRACT NO
DRAWING NO T-012
REV 0
SCALE 1"=200'-0" 1"=50'-0"
SHEET NO

Plot Driver=Expo_H_pdf.plt Pentable=Expo_H.TBL USER=Alvaradof 8:36:11 AM 12/16/2008 W:\60022129 Expo 2_LA\cadd\Rail\Sheet\base\t012.plg

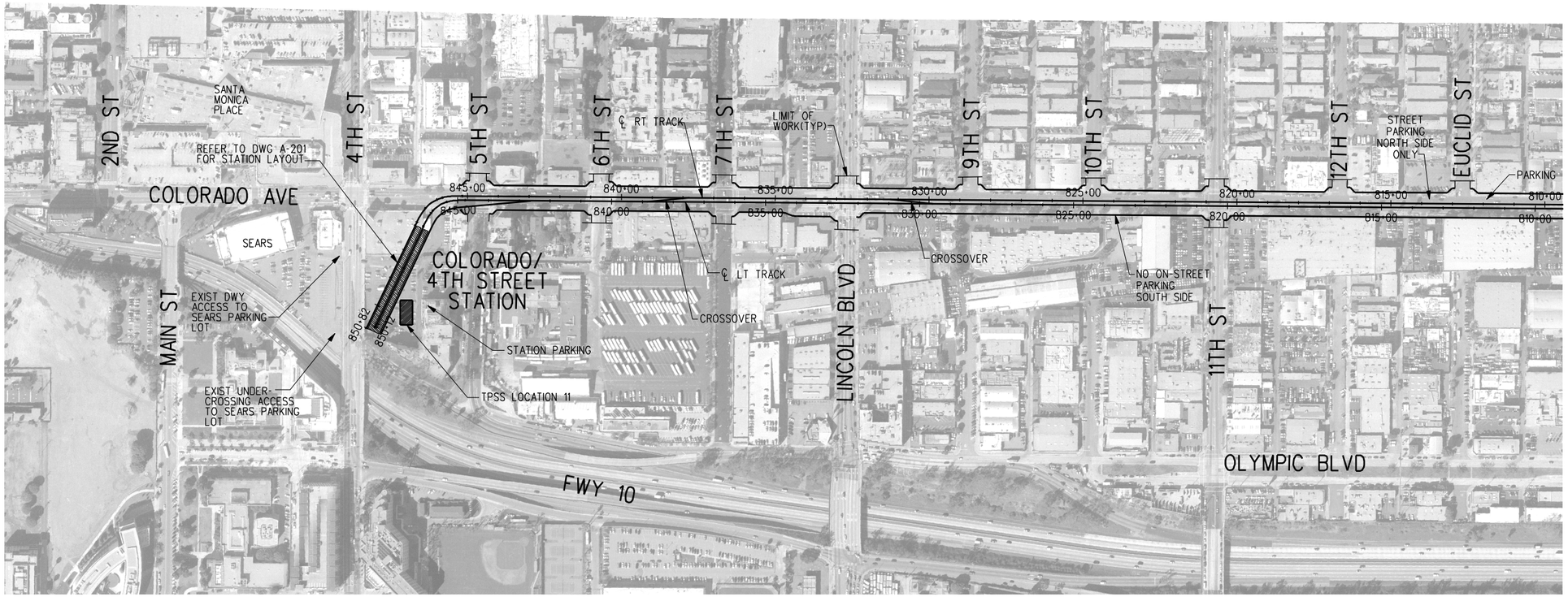

PLAN

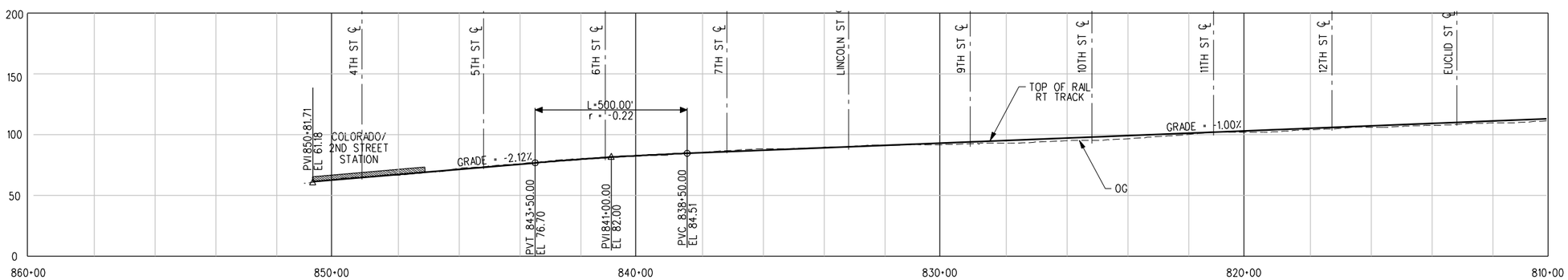

PROFILE

50' 0 50' 100' 100' 0 200' 400'

CONCEPTUAL ENGINEERING

THE PREPARATION OF THIS DRAWING HAS BEEN FINANCED BY THE TAXES OF THE CITIZENS OF LOS ANGELES COUNTY AND OF THE STATE OF CALIFORNIA.

REV	DATE	BY	APP	REG NO	EXPIRES	SEAL HOLDER	DESCRIPTION
0	1/5/09	-	-	-	-		DRAFT EIR

DESIGNED BY J. SUSILO
DRAWN BY C. NATHAN
CHECKED BY J. AVENDANO
IN CHARGE L. J. MOHR
DATE 1/5/09

Exposition Metro Line Construction Authority
Expo

DMJM HARRIS | AECOM
707 WILSHIRE BLVD, SUITE 3300
LOS ANGELES, CALIFORNIA 90017
TEL (213) 243-5500 FAX (213) 243-5552

SUBMITTED
APPROVED

EXPOSITION TRANSIT PROJECT-PHASE 2
COLORADO BLVD

PLAN AND PROFILE
STA 810+00 TO STA 850+81.71

CONTRACT NO
DRAWING NO T-013
REV 0
SCALE 1"=200'-0"
SHEET NO

Plot Driver=Expo_H_pdf.plt Pentable=Expo_H.TBL USER=Alvaradof 8:42:08 AM 12/16/2008 W:\60022129 Expo 2_LA\cadd\Rail\Sheet\base\1013.plg

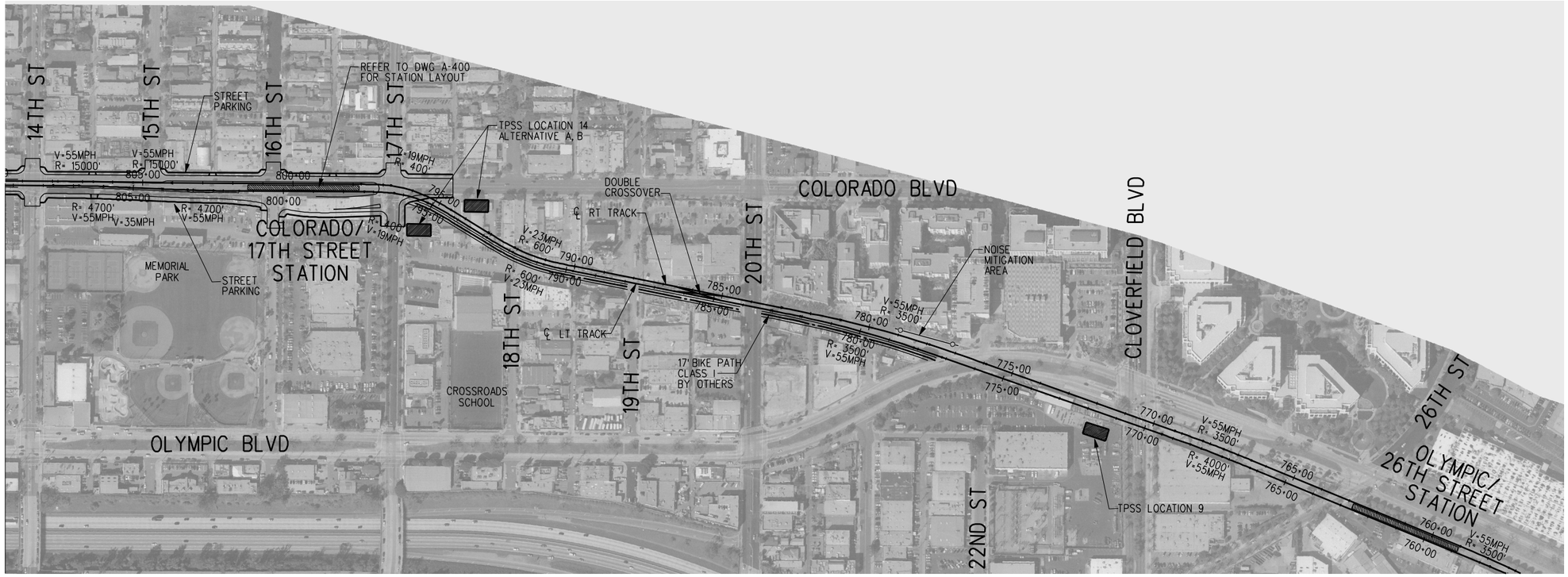

PLAN

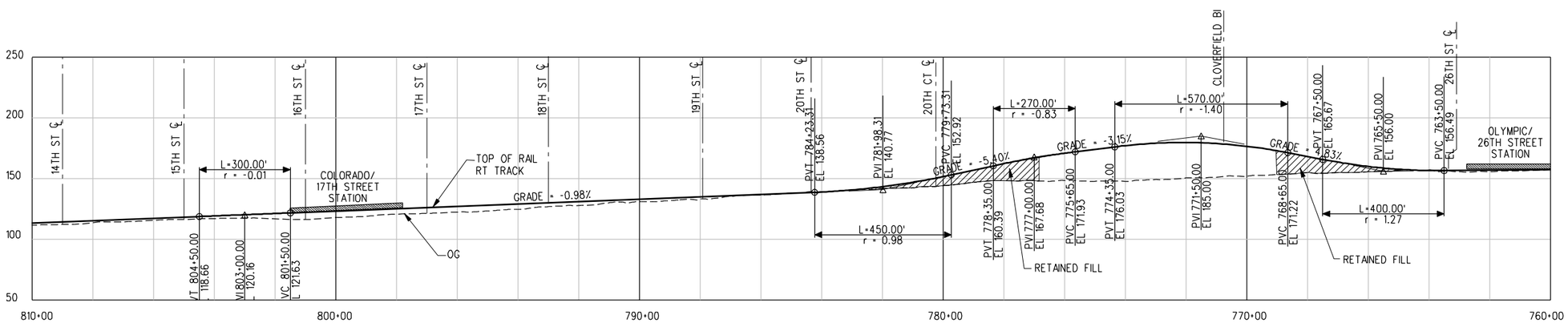

PROFILE

50' 0 50' 100'

100' 0 200' 400'

CONCEPTUAL ENGINEERING

THE PREPARATION OF THIS DRAWING HAS BEEN FINANCED BY THE TAXES OF THE CITIZENS OF LOS ANGELES COUNTY AND OF THE STATE OF CALIFORNIA.

REV	DATE	BY	APP	REG NO	EXPIRES	SEAL HOLDER	DESCRIPTION
0	1/5/09	-	-	-	-		DRAFT EIR

DESIGNED BY J. SUSILO
DRAWN BY C. NATHAN
CHECKED BY J. AVENDANO
IN CHARGE L. J. MOHR
DATE 1/5/09

Exposition Metro Line Construction Authority
Expo

DMJM HARRIS | AECOM
707 WILSHIRE BLVD, SUITE 3300
LOS ANGELES, CALIFORNIA 90017
TEL (213) 243-5500 FAX (213) 243-5552

SUBMITTED
APPROVED

EXPOSITION TRANSIT PROJECT-PHASE 2
COLORADO BLVD

PLAN AND PROFILE
STA 760+00 TO STA 810+00

CONTRACT NO
DRAWING NO T-014
REV 0
SCALE 1" =200' -0"
SHEET NO

Plot Driver=Expo_H_pdf.plt Pentable=Expo_H.TBL USER=Alvaradof 8:42:29 AM 12/16/2008 W:\60022129 Expo 2_LA\cadd\Rail\Sheet\base\1014.plg

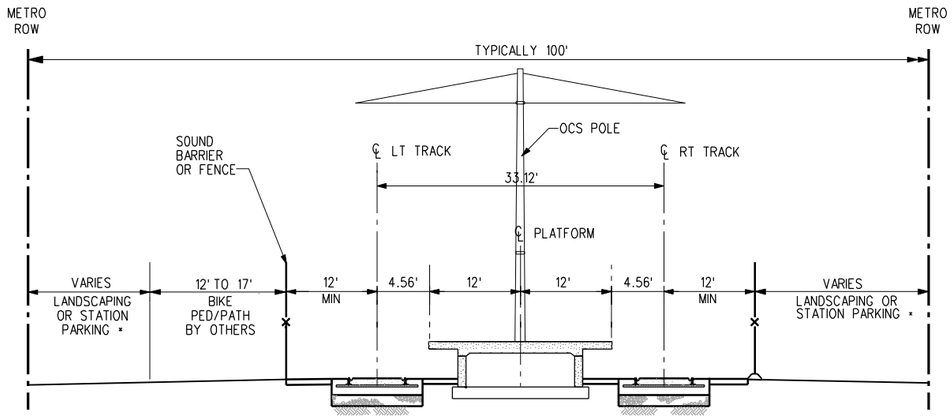

* WHERE FEASIBLE

TYPICAL CENTERED AT-GRADE STATION ON ROW (A / TX-001)

SCALE: NTS

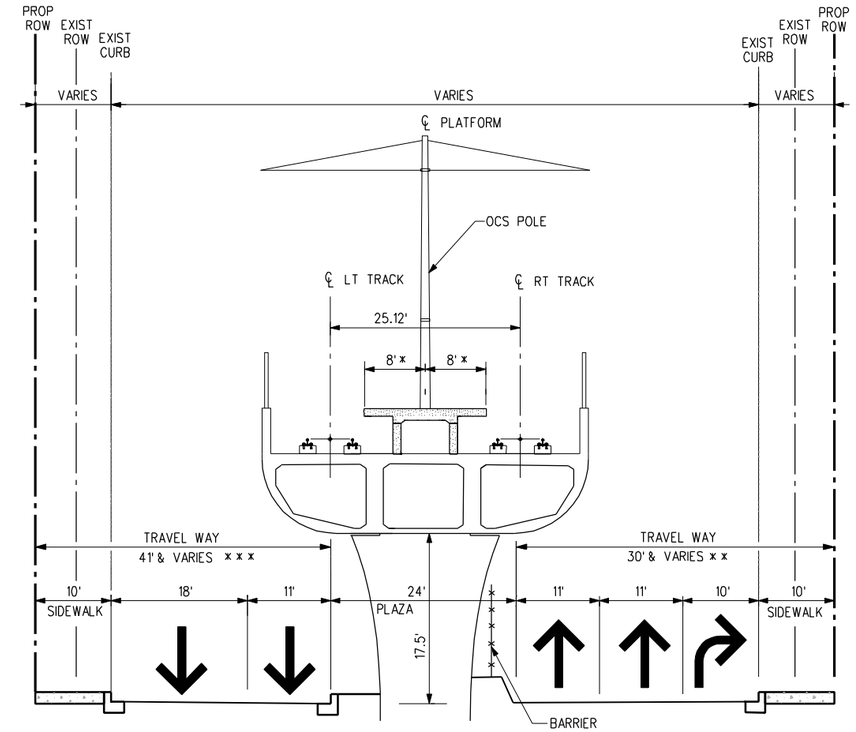

x FOR VENICE/SEPULVEDA STATION PLATFORM WIDTH = 23'
x x FOR VENICE/SEPULVEDA STATION TRAVEL WAY WIDTH = 39'
x x x FOR VENICE/SEPULVEDA STATION TRAVEL WAY WIDTH = 50'

AERIAL STATION AT SEPULVEDA BLVD/NATIONAL BLVD (C / TX-001)

SCALE: NTS

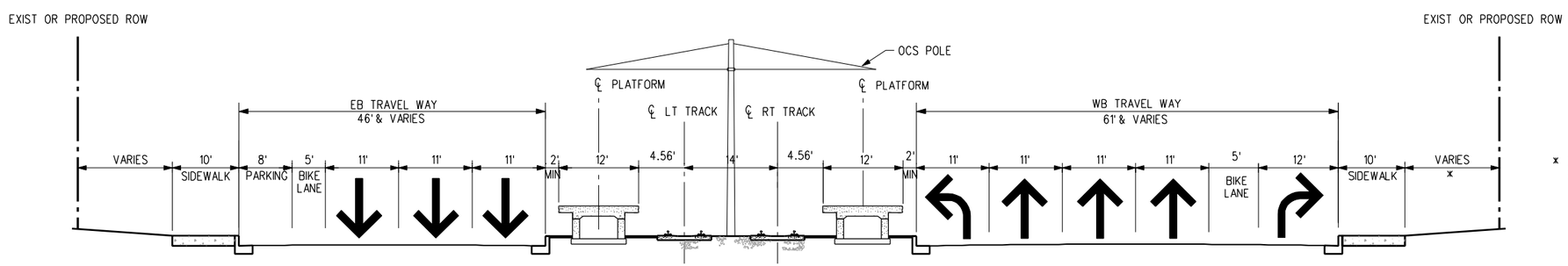

x DIMENSION VARIES BASED ON EXISTING RIGHT-OF-WAY WIDTH

VENICE/MOTOR STATION (B / TX-001)

SCALE: NTS

CONCEPTUAL ENGINEERING

THE PREPARATION OF THIS DRAWING HAS BEEN FINANCED BY THE TAXES OF THE CITIZENS OF LOS ANGELES COUNTY AND OF THE STATE OF CALIFORNIA.

REV	DATE	BY	APP	REG NO	EXPIRES	SEAL HOLDER	DESCRIPTION
0	1/5/09	-	-	-	-		DRAFT EIR

DESIGNED BY J. SUSILO
DRAWN BY C. NATHAN
CHECKED BY J. AVENDANO
IN CHARGE L. J. MOHR
DATE 1/5/09

Exposition Metro Line Construction Authority
Expo

DMJM HARRIS | AECOM
707 WILSHIRE BLVD, SUITE 3300
LOS ANGELES, CALIFORNIA 90017
TEL (213) 243-5500 FAX (213) 243-5552

SUBMITTED
APPROVED

EXPOSITION TRANSIT PROJECT-PHASE 2

TYPICAL SECTIONS
TYPICAL TRACK SECTIONS
SHEET 1 OF 4

CONTRACT NO
DRAWING NO TX-001 REV 0
SCALE AS SHOWN
SHEET NO

Plot Driver=Expo_H_pdf.plt Pentable=Expo_H.TBL USER=Alvaradof 8:44:33 AM 12/16/2008 W:\60022129 Expo 2_LA\cadd\Rail\Sheet\typical sections\tx001.plg

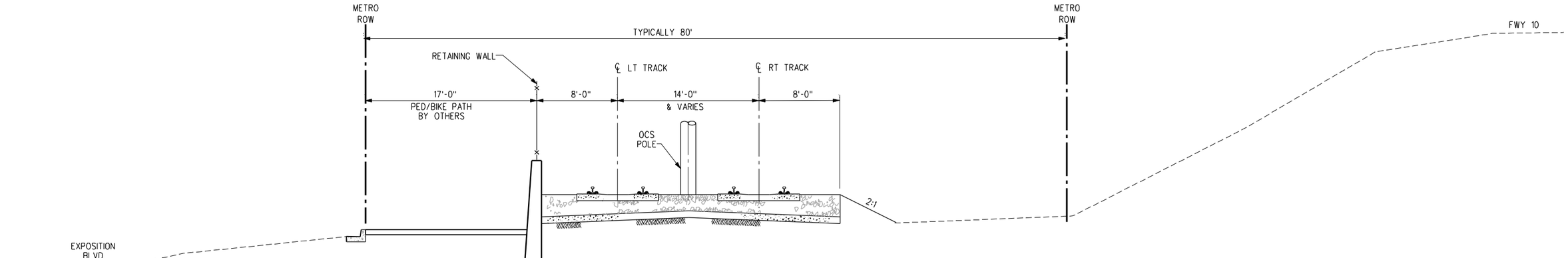

SECTION ON EMBANKMENT ADJACENT TO FWY 10 WEST OF BAGLEY AVENUE

SCALE: NTS

D TX-002

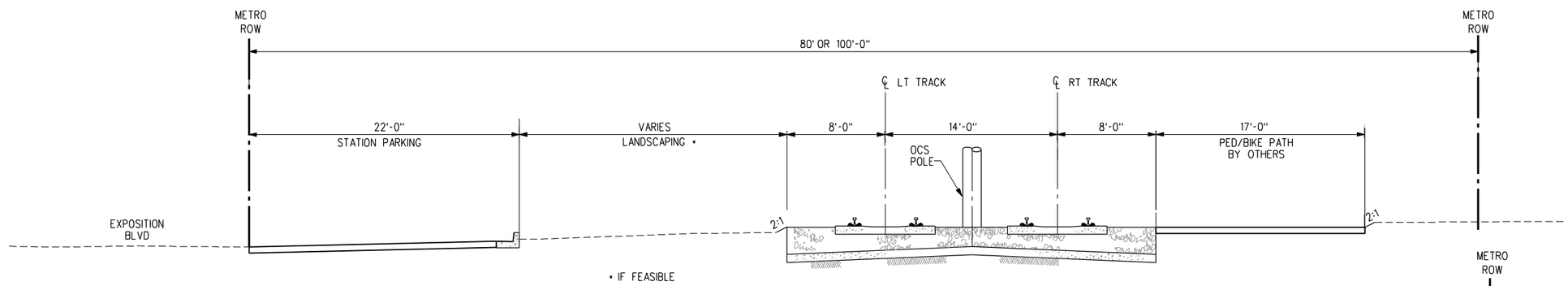

SECTION ON EMBANKMENT ADJACENT TO FWY 10 EAST OF BAGLEY AVENUE

SCALE: NTS

E TX-002

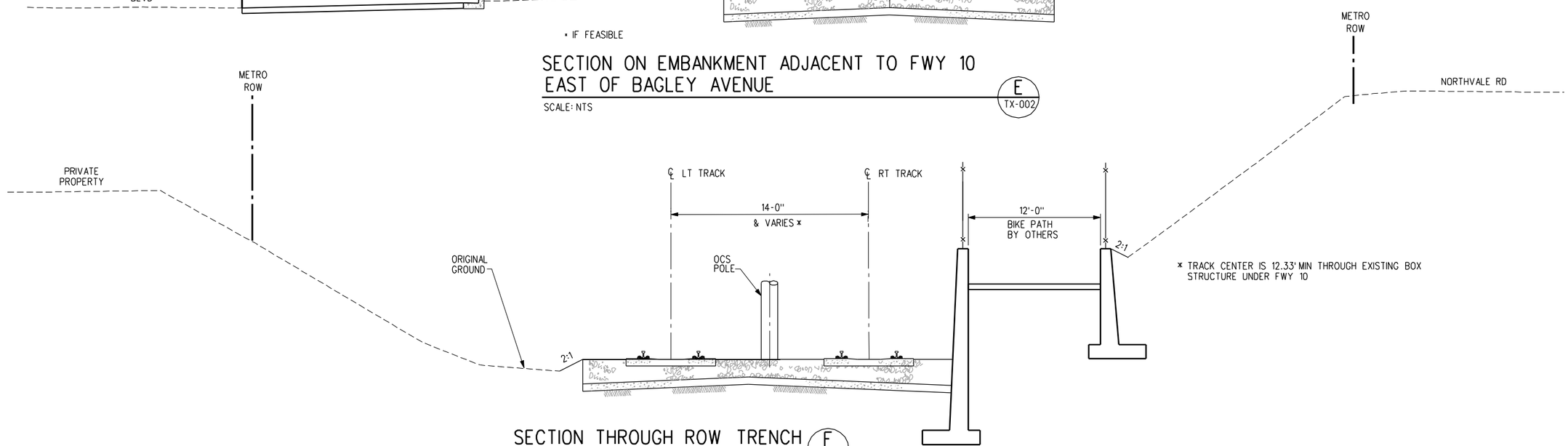

SECTION THROUGH ROW TRENCH

SCALE: NTS

F TX-002

CONCEPTUAL ENGINEERING

THE PREPARATION OF THIS DRAWING HAS BEEN FINANCED BY THE TAXES OF THE CITIZENS OF LOS ANGELES COUNTY AND OF THE STATE OF CALIFORNIA.

REV	DATE	BY	APP	REG NO	EXPIRES	SEAL HOLDER	DESCRIPTION
0	1/5/09	-	-	-	-		DRAFT EIR

DESIGNED BY J. SUSILO
DRAWN BY C. NATHAN
CHECKED BY J. AVENDANO
IN CHARGE L. J. MOHR
DATE 1/5/09

Exposition Metro Line Construction Authority
Expo

DMJM HARRIS | AECOM
707 WILSHIRE BLVD. SUITE 3300
LOS ANGELES, CALIFORNIA 90017
TEL (213) 243-5500 FAX (213) 243-5552

SUBMITTED
APPROVED

EXPOSITION TRANSIT PROJECT-PHASE 2

TYPICAL SECTIONS
RIGHT OF WAY
SHEET 2 OF 4

CONTRACT NO
DRAWING NO TX-002
REV 0
SCALE AS SHOWN
SHEET NO

Plot Driver=Expo_H_pdf.plt Pentable=Expo_H.TBL USER=Alvaradof 8:48:48 AM 12/16/2008 W:\60022129 Expo 2_LA\cadd\Rail\Sheet\typical sections\tx002.plg

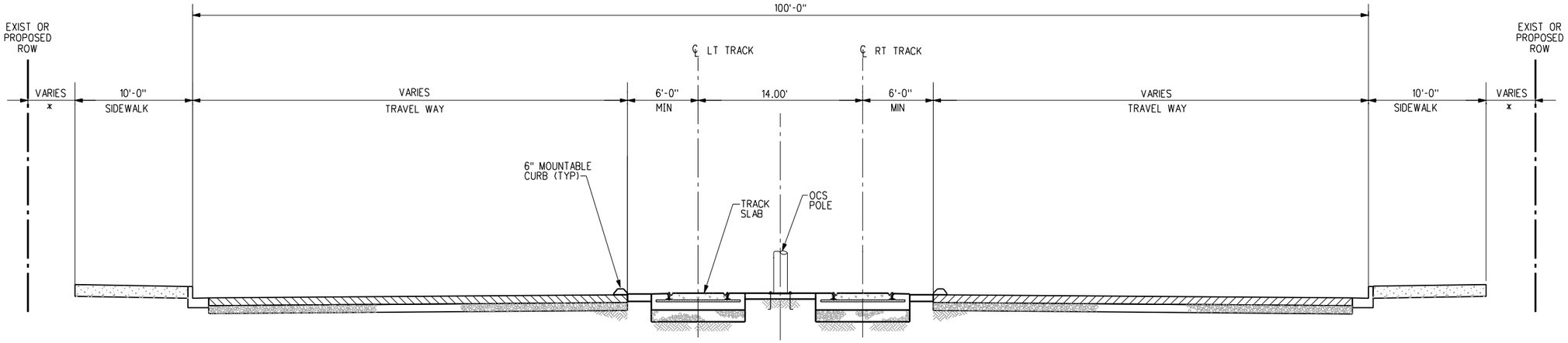

TYPICAL STREET RUNNING SECTION ON VENICE BLVD & SEPULVEDA BLVD

G
TX-003

SCALE: NTS

* DIMENSION VARIES BASED ON EXIST RIGHT-OF-WAY WIDTH.

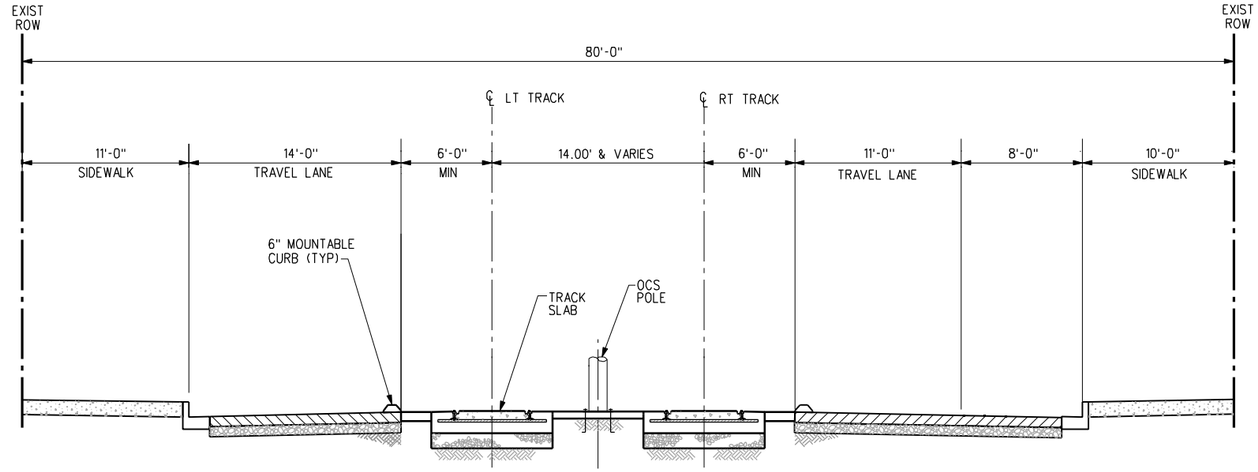

TYPICAL STREET RUNNING ON COLORADO AVENUE

H
TX-003

SCALE: NTS

CONCEPTUAL ENGINEERING

THE PREPARATION OF THIS DRAWING HAS BEEN FINANCED BY THE TAXES OF THE CITIZENS OF LOS ANGELES COUNTY AND OF THE STATE OF CALIFORNIA.

REV	DATE	BY	APP	REG NO	EXPIRES	SEAL HOLDER	DESCRIPTION
0	1/5/09	-	-	-	-		DRAFT EIR

DESIGNED BY J. SUSILO
DRAWN BY C. NATHAN
CHECKED BY J. AVENDANO
IN CHARGE L. J. MOHR
DATE 1/5/09

Exposition Metro Line Construction Authority
Expo

DMJM HARRIS | AECOM
707 WILSHIRE BLVD. SUITE 3300
LOS ANGELES, CALIFORNIA 90017
TEL (213) 243-5500 FAX (213) 243-5552

SUBMITTED
APPROVED

EXPOSITION TRANSIT PROJECT-PHASE 2

TYPICAL SECTIONS
STREET RUNNING SECTIONS
SHEET 3 OF 4

CONTRACT NO
DRAWING NO TX-003
REV 0
SCALE AS SHOWN
SHEET NO

Plot Driver=Expo_H_pdf.plt Pentable=Expo_H.TBL USER=Alvaradof 8:50:10 AM 12/16/2008 W:\60022129 Expo 2_LA\cadd\Rail\Sheet\typical sections\tx003.plg

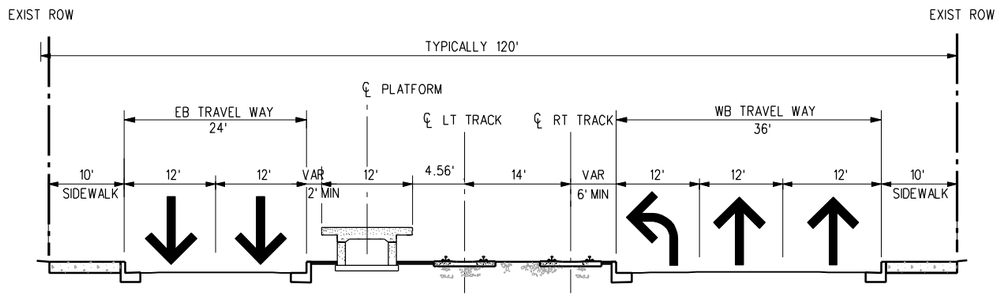

OLYMPIC/17TH STATION

SCALE: NTS

1
TX-004

CONCEPTUAL ENGINEERING

THE PREPARATION OF THIS DRAWING HAS BEEN FINANCED BY THE TAXES OF THE CITIZENS OF LOS ANGELES COUNTY AND OF THE STATE OF CALIFORNIA.

REV	DATE	BY	APP	REG NO	EXPIRES	SEAL HOLDER	DESCRIPTION
0	1/5/09	-	-	-	-		DRAFT EIR

DESIGNED BY J. SUSILO
DRAWN BY C. NATHAN
CHECKED BY J. AVENDANO
IN CHARGE L. J. MOHR
DATE 1/5/09

Exposition Metro Line Construction Authority
Expo

DMJM HARRIS | AECOM
707 WILSHIRE BLVD. SUITE 3300
LOS ANGELES, CALIFORNIA 90017
TEL (213) 243-5500 FAX (213) 243-5552

SUBMITTED
APPROVED

EXPOSITION TRANSIT PROJECT-PHASE 2

TYPICAL SECTIONS
TYPICAL TRACK SECTIONS
SHEET 4 OF 4

CONTRACT NO
DRAWING NO TX-004
REV 0
SCALE AS SHOWN
SHEET NO

Plot Driver=Expo_H_pdf.plt Pentable=Expo_H.TBL USER=Alvaradof 8:55:17 AM 12/16/2008 W:\60022129 Expo 2_LA\cadd\Rail\Sheet\typical sections\tx004.plg

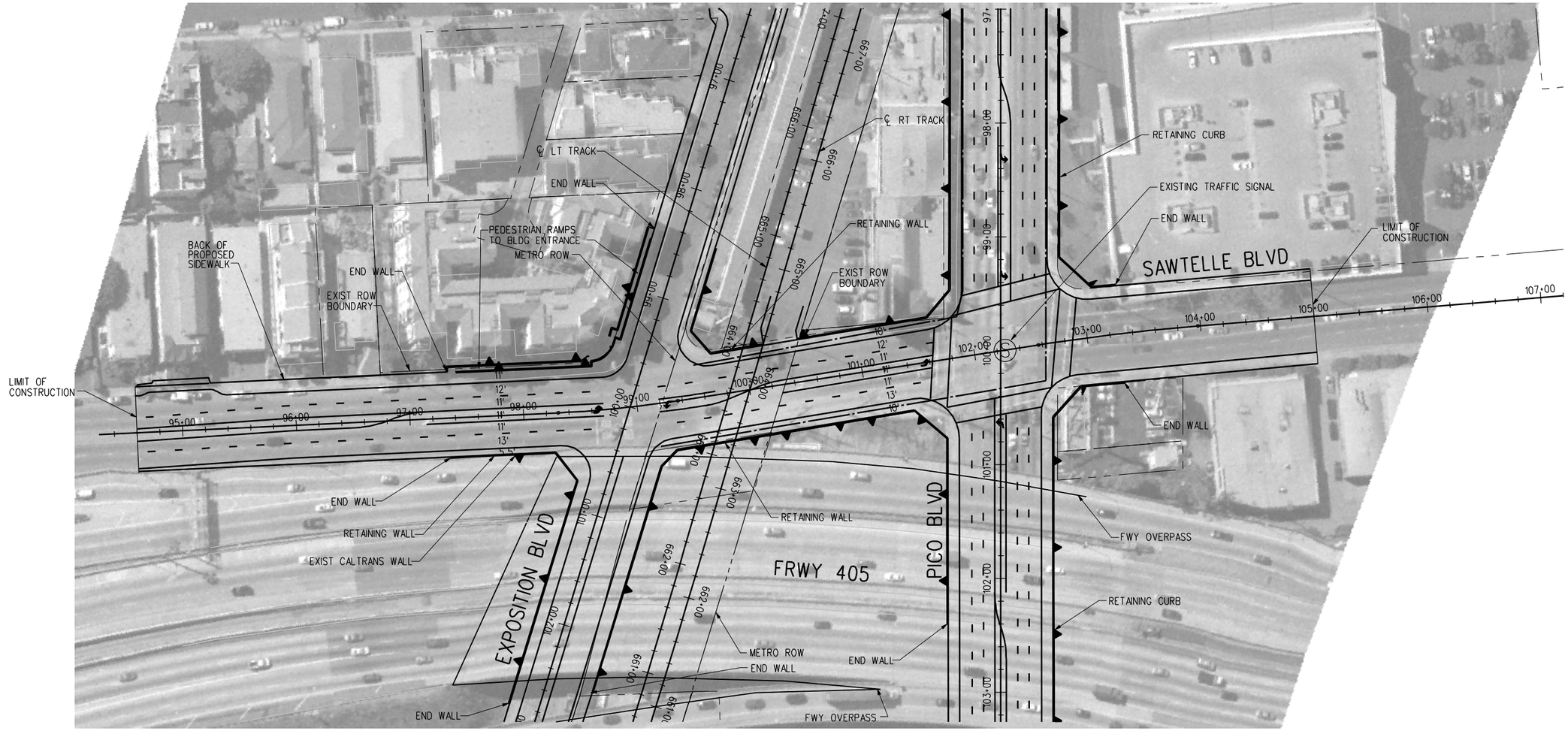

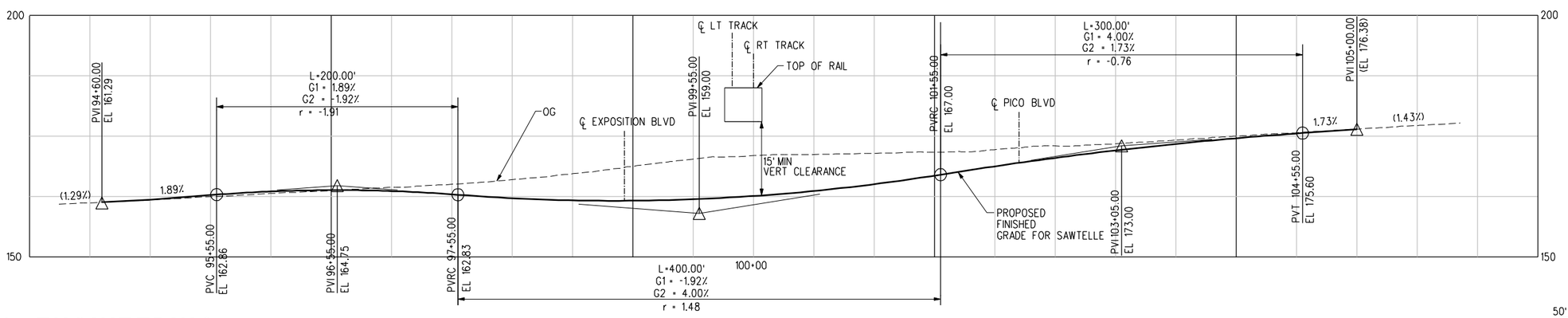

CONCEPTUAL ENGINEERING

PROFILE

50' 0 50' 100'

THE PREPARATION OF THIS DRAWING HAS BEEN FINANCED BY THE TAXES OF THE CITIZENS OF LOS ANGELES COUNTY AND OF THE STATE OF CALIFORNIA.

REV	DATE	BY	APP	REG NO	EXPIRES	SEAL HOLDER	DESCRIPTION
0	1/5/09	-	-	-	-		DRAFT EIR

DESIGNED BY J. SUSILO
DRAWN BY C. NATHAN
CHECKED BY J. AVENDANO
IN CHARGE L. J. MOHR
DATE 1/5/09

Exposition Metro Line Construction Authority
Expo

DMJM HARRIS | AECOM
707 WILSHIRE BLVD, SUITE 3300
LOS ANGELES, CALIFORNIA 90017
TEL (213) 243-5500 FAX (213) 243-5552

SUBMITTED
APPROVED

EXPOSITION TRANSIT PROJECT-PHASE 2

STREET PLAN AND PROFILE
SAWTELLE BLVD

CONTRACT NO
DRAWING NO CP-100
REV 0
SCALE 1" =50' -0"
SHEET NO

Plot Driver=Expo_H_pdf.plt Pentable=Expo_H.TBL USER=Alvarado f 8:57:24 AM 12/16/2008 W:\60022129 Expo 2_LA\cadd\Civil\Sheet\cp100.plg

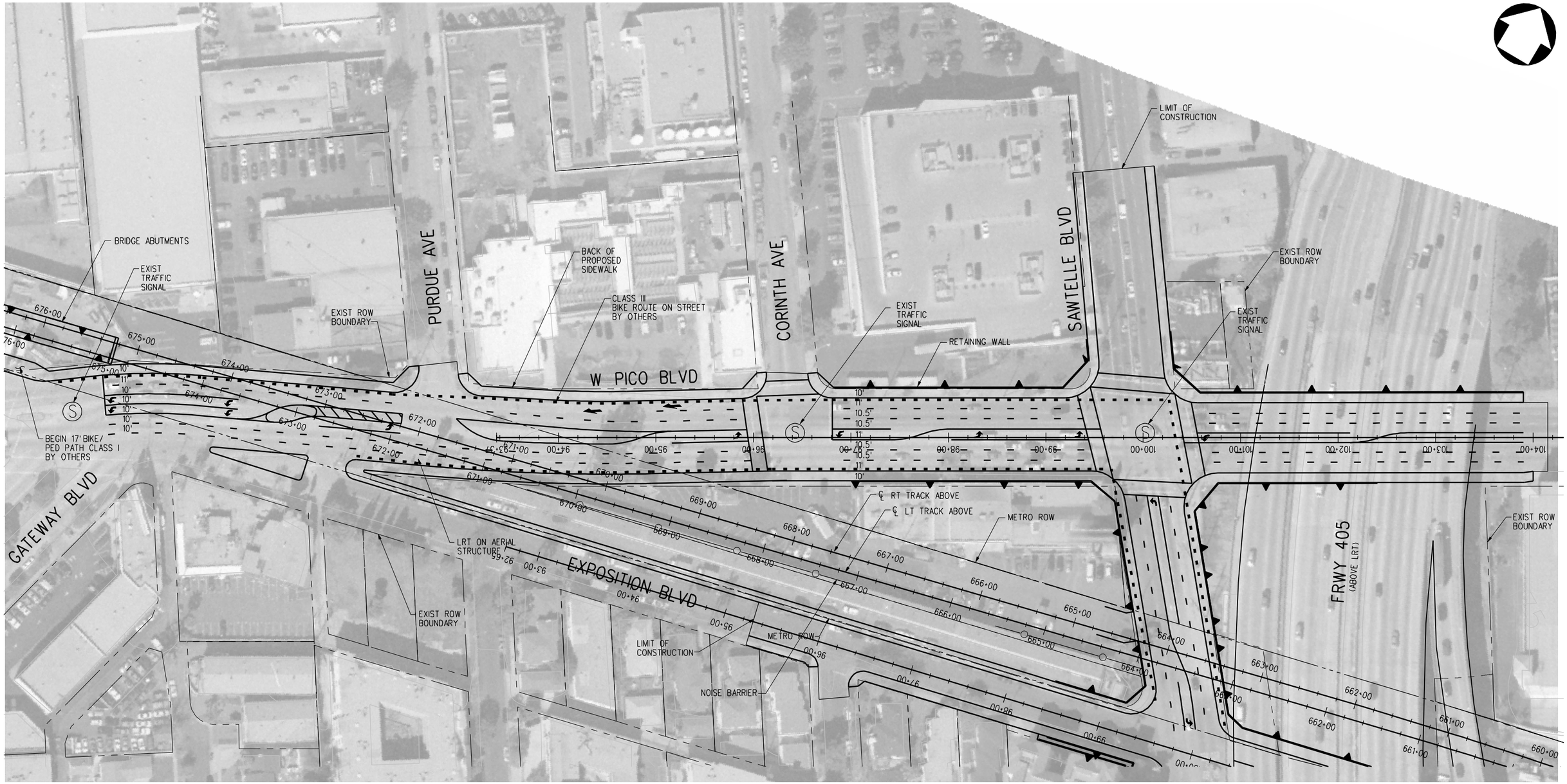

CONCEPTUAL ENGINEERING

THE PREPARATION OF THIS DRAWING HAS BEEN FINANCED BY THE TAXES OF THE CITIZENS OF LOS ANGELES COUNTY AND OF THE STATE OF CALIFORNIA.

REV	DATE	BY	APP	REG NO	EXPIRES	SEAL HOLDER	DESCRIPTION
0	1/5/09	-	-	-	-		DRAFT EIR

DESIGNED BY J. SUSILO
DRAWN BY C. NATHAN
CHECKED BY J. AVENDANO
IN CHARGE L. J. MOHR
DATE 1/5/09

Exposition Metro Line Construction Authority
Expo

DMJM HARRIS | AECOM
707 WILSHIRE BLVD, SUITE 3300
LOS ANGELES, CALIFORNIA 90017
TEL (213) 243-5500 FAX (213) 243-5552

SUBMITTED
APPROVED

EXPOSITION TRANSIT PROJECT-PHASE 2

STREET PLAN
PICO/GATEWAY BLVD

CONTRACT NO
DRAWING NO CP-200
REV 0
SCALE 1"=50'-0"
SHEET NO

Plot Driver=Expo_H_pdf.plt Pentable=Expo_H.TBL USER=Alvaradof 8:57:35 AM 12/16/2008 W:\60022129 Expo 2_LA\cadd\Civil\Sheet\cp200.plg

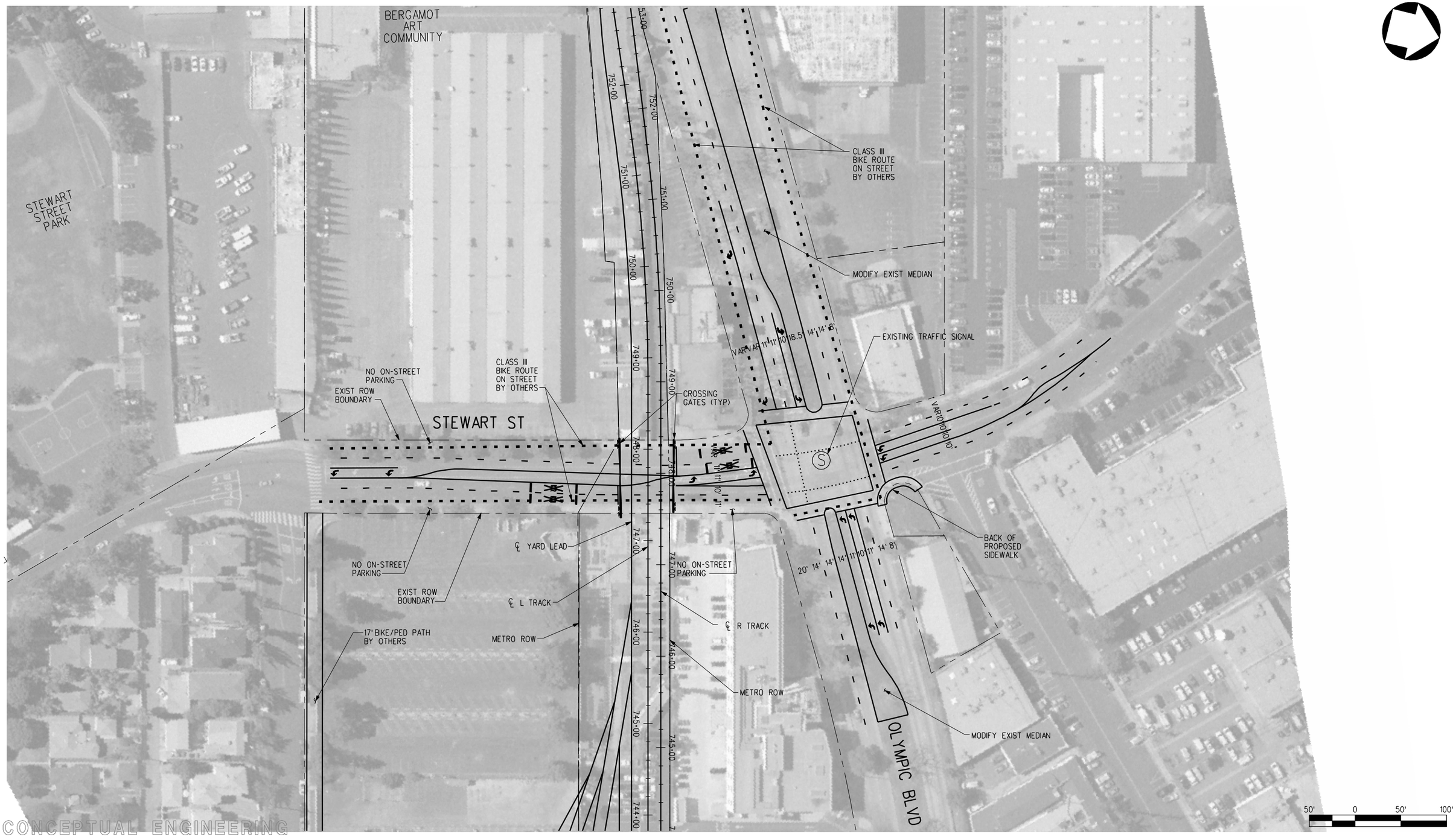

CONCEPTUAL ENGINEERING

THE PREPARATION OF THIS DRAWING HAS BEEN FINANCED BY THE TAXES OF THE CITIZENS OF LOS ANGELES COUNTY AND OF THE STATE OF CALIFORNIA.

REV	DATE	BY	APP	REG NO	EXPIRES	SEAL HOLDER	DESCRIPTION
0	1/5/09	-	-	-	-		DRAFT EIR

DESIGNED BY J. SUSILO
DRAWN BY C. NATHAN
CHECKED BY J. AVENDANO
IN CHARGE L. J. MOHR
DATE 1/5/09

Exposition Metro Line Construction Authority
Expo

DMJM HARRIS | AECOM
707 WILSHIRE BLVD, SUITE 3300
LOS ANGELES, CALIFORNIA 90017
TEL (213) 243-5500 FAX (213) 243-5552

SUBMITTED
APPROVED

EXPOSITION TRANSIT PROJECT-PHASE 2

GRADE CROSSING PLAN
STEWART STREET

CONTRACT NO
DRAWING NO CI-100
REV 0
SCALE 1" =50' -0"
SHEET NO

Plot Driver=Expo_H_pdf.plt Pentable=Expo_H.TBL USER=Alvaradof 8:58:35 AM 12/16/2008 W:\60022129 Expo 2_LA\cadd\Civil\Sheet\Grade Crossing\ci100.plg

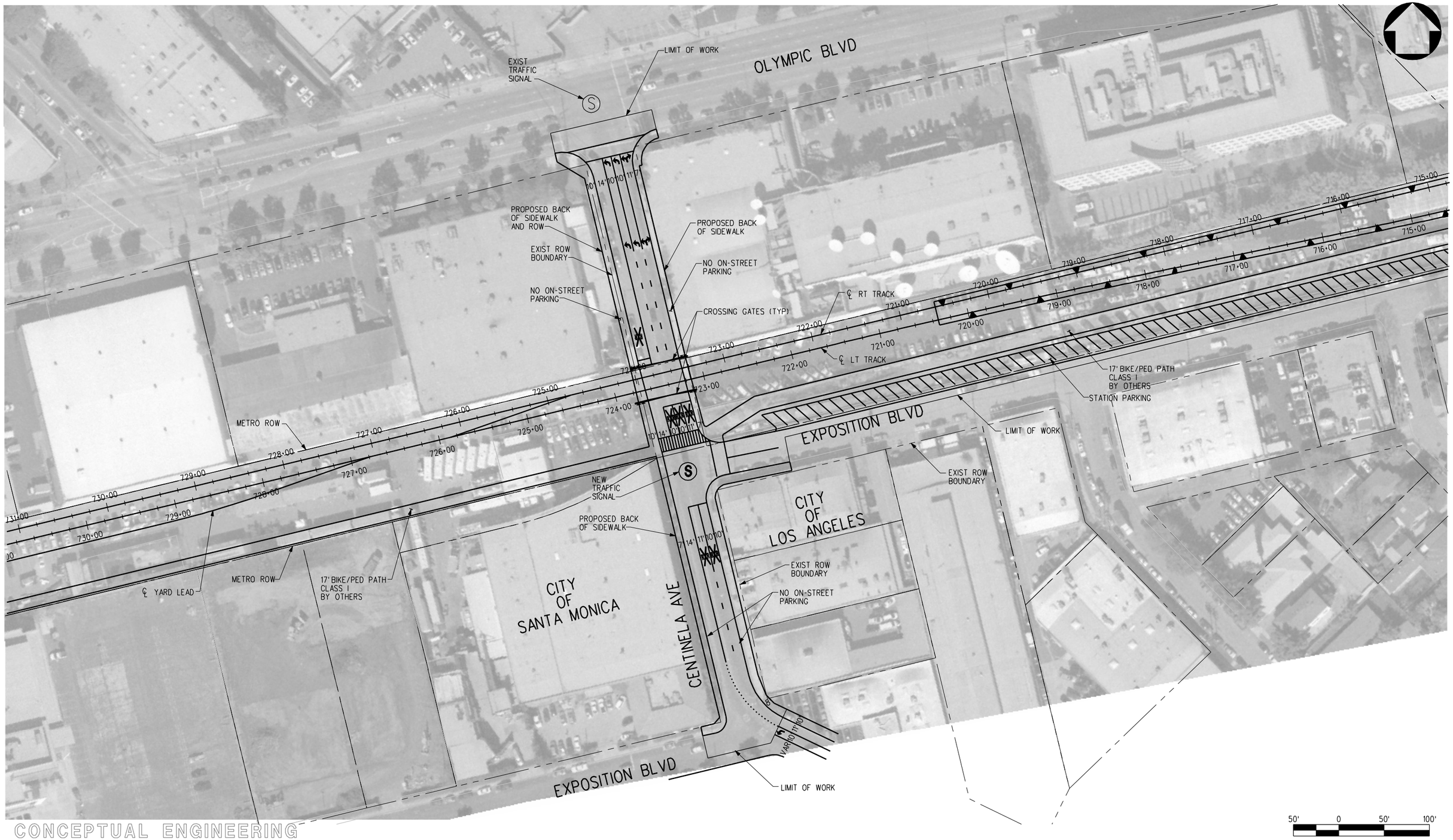

CONCEPTUAL ENGINEERING

THE PREPARATION OF THIS DRAWING HAS BEEN FINANCED BY THE TAXES OF THE CITIZENS OF LOS ANGELES COUNTY AND OF THE STATE OF CALIFORNIA.

REV	DATE	BY	APP	REG NO	EXPIRES	SEAL HOLDER	DESCRIPTION
0	1/5/09	-	-	-	-		DRAFT EIR

DESIGNED BY J. SUSILO
DRAWN BY C. NATHAN
CHECKED BY J. AVENDANO
IN CHARGE L. J. MOHR
DATE 1/5/09

Exposition Metro Line Construction Authority
Expo

DMJM HARRIS | AECOM
707 WILSHIRE BLVD, SUITE 3300
LOS ANGELES, CALIFORNIA 90017
TEL (213) 243-5500 FAX (213) 243-5552

SUBMITTED
APPROVED

EXPOSITION TRANSIT PROJECT-PHASE 2

GRADE CROSSING PLAN
CENTINELA AVENUE

CONTRACT NO
DRAWING NO CI-200
REV 0
SCALE 1" =50' -0"
SHEET NO

Plot Driver=Expo_H_pdf.plt Pentable=Expo_H.TBL USER=Alvaradof 8:58:48 AM 12/16/2008 W:\60022129 Expo 2_LA\cadd\Civil\Sheet\Grade Crossing\ci200.plg

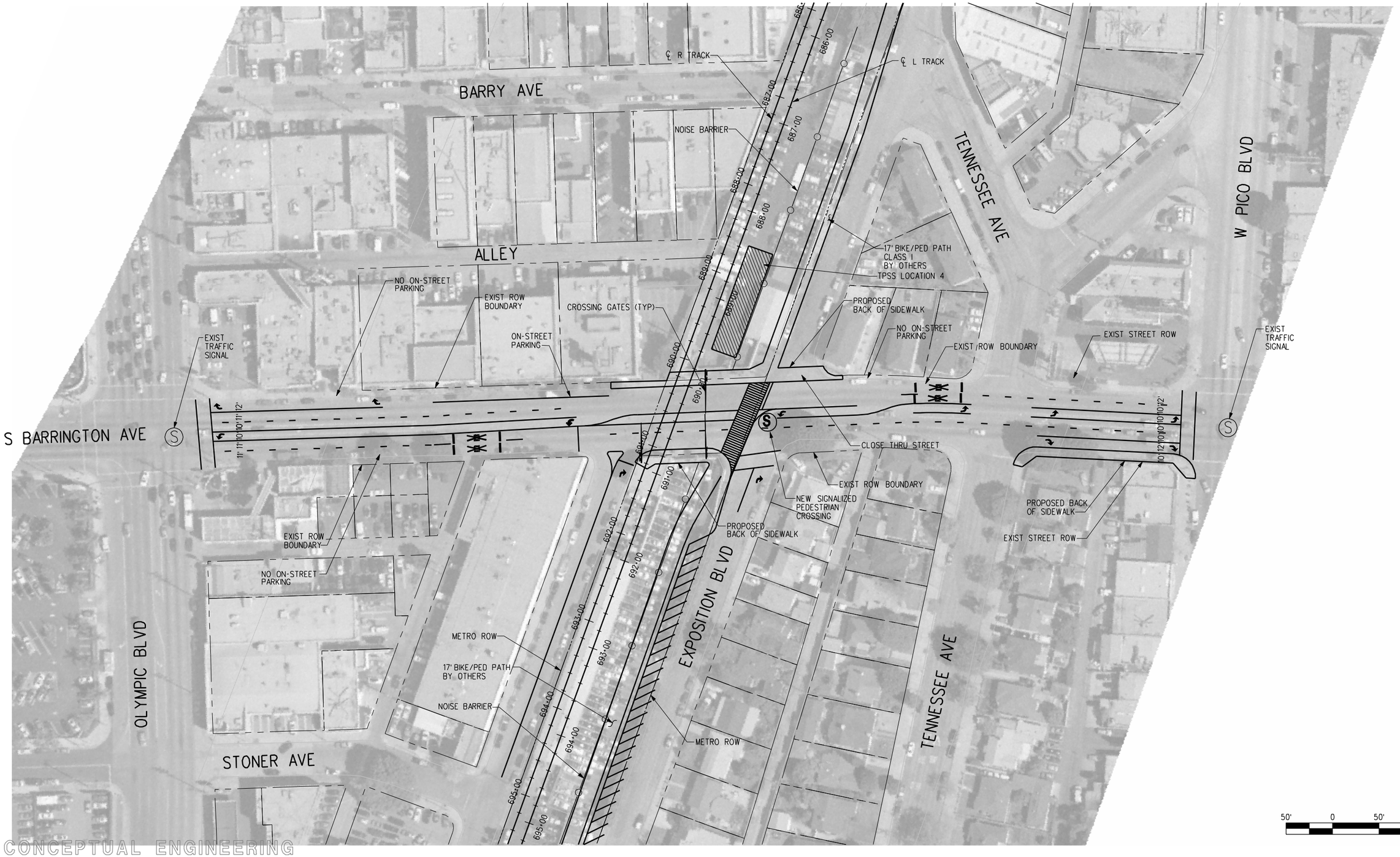

CONCEPTUAL ENGINEERING

THE PREPARATION OF THIS DRAWING HAS BEEN FINANCED BY THE TAXES OF THE CITIZENS OF LOS ANGELES COUNTY AND OF THE STATE OF CALIFORNIA.

REV	DATE	BY	APP	REG NO	EXPIRES	SEAL HOLDER	DESCRIPTION
0	1/5/09	-	-	-	-		DRAFT EIR

DESIGNED BY J. SUSILO
DRAWN BY C. NATHAN
CHECKED BY J. AVENDANO
IN CHARGE L. J. MOHR
DATE 1/5/09

Exposition Metro Line Construction Authority
Expo

DMJM HARRIS | AECOM
707 WILSHIRE BLVD, SUITE 3300
LOS ANGELES, CALIFORNIA 90017
TEL (213) 243-5500 FAX (213) 243-5552

SUBMITTED
APPROVED

EXPOSITION TRANSIT PROJECT-PHASE 2

GRADE CROSSING PLAN
BARRINGTON AVENUE

CONTRACT NO
DRAWING NO CI-300
REV 0
SCALE 1"=50'-0"
SHEET NO

Plot Driver=Expo_H_pdf.plt Pentable=Expo_H.TBL USER=Alvaradof 9:22:53 AM 12/16/2008 W:\60022129 Expo 2_LA\cadd\Civil\Sheet\Grade Crossing\ci300.plg

CONCEPTUAL ENGINEERING

50' 0 50' 100'

THE PREPARATION OF THIS DRAWING HAS BEEN FINANCED BY THE TAXES OF THE CITIZENS OF LOS ANGELES COUNTY AND OF THE STATE OF CALIFORNIA.

REV	DATE	BY	APP	REG NO	EXPIRES	SEAL HOLDER	DESCRIPTION
0	1/5/09	-	-	-	-		DRAFT EIR

DESIGNED BY J. SUSILO
DRAWN BY C. NATHAN
CHECKED BY J. AVENDANO
IN CHARGE L. J. MOHR
DATE 1/5/09

Exposition Metro Line Construction Authority
Expo

DMJM HARRIS | AECOM
707 WILSHIRE BLVD, SUITE 3300
LOS ANGELES, CALIFORNIA 90017
TEL (213) 243-5500 FAX (213) 243-5552

SUBMITTED
APPROVED

EXPOSITION TRANSIT PROJECT-PHASE 2

GRADE CROSSING PLAN
RIGHT-OF-WAY ALIGNMENT
SEPULVEDA BOULEVARD

CONTRACT NO
DRAWING NO CI-400
REV 0
SCALE 1"=50'-0"
SHEET NO

Plot Driver=Expo_H_pdf.plt Pentable=Expo_H.TBL USER=Alvaradof 9:23:32 AM 12/16/2008 W:\60022129 Expo 2_LA\cadd\Civil\Sheet\Grade Crossing\ci400.plg

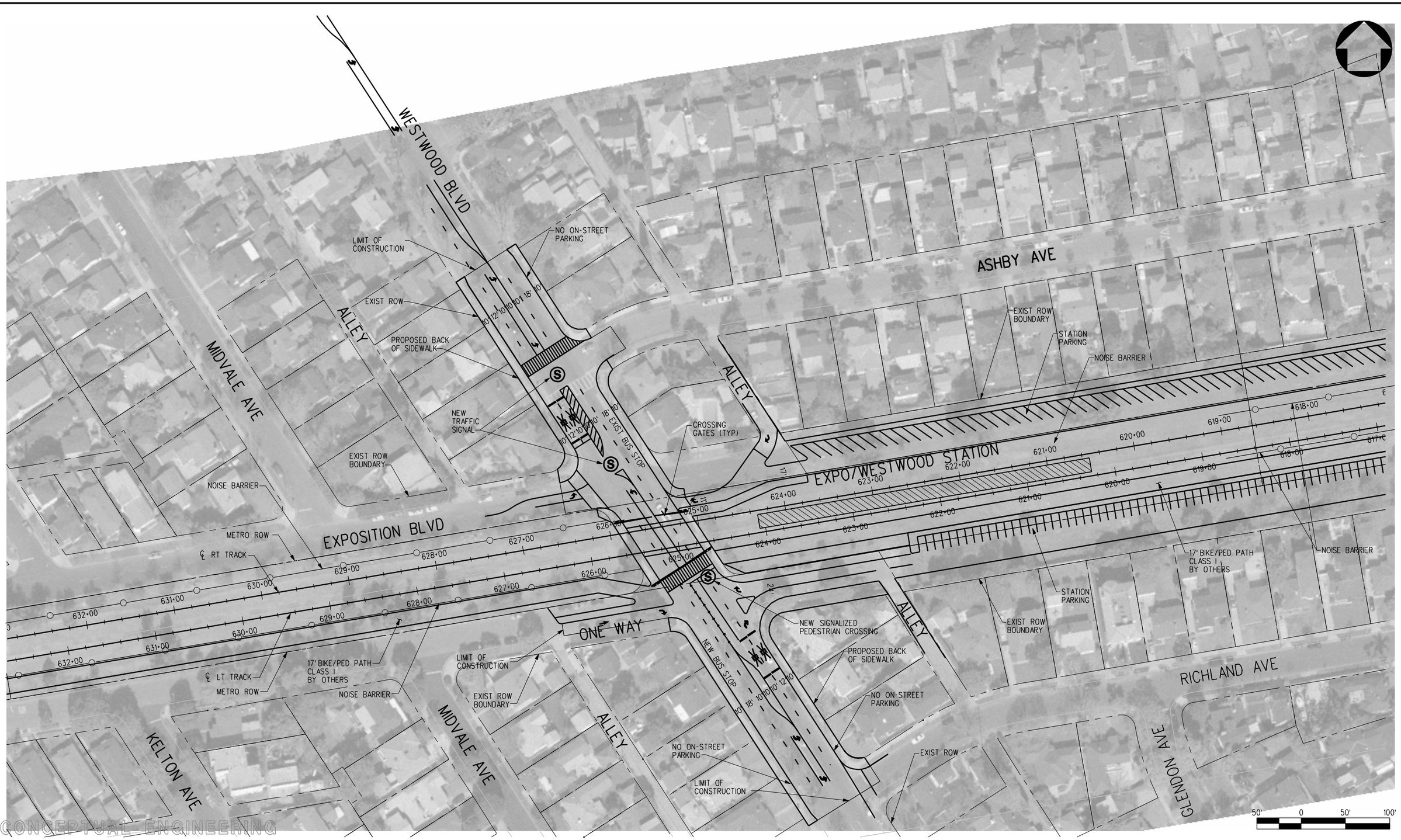

CONCEPTUAL ENGINEERING

THE PREPARATION OF THIS DRAWING HAS BEEN FINANCED BY THE TAXES OF THE CITIZENS OF LOS ANGELES COUNTY AND OF THE STATE OF CALIFORNIA.

REV	DATE	BY	APP	REG NO	EXPIRES	SEAL HOLDER	DESCRIPTION
0	1/5/09	-	-	-	-		DRAFT EIR

DESIGNED BY J. SUSILO
DRAWN BY C. NATHAN
CHECKED BY J. AVENDANO
IN CHARGE L. J. MOHR
DATE 1/5/09

Exposition Metro Line Construction Authority
Expo

DMJM HARRIS | AECOM
707 WILSHIRE BLVD, SUITE 3300
LOS ANGELES, CALIFORNIA 90017
TEL (213) 243-5500 FAX (213) 243-5552

SUBMITTED
APPROVED

EXPOSITION TRANSIT PROJECT-PHASE 2

GRADE CROSSING PLAN
WESTWOOD AVENUE

CONTRACT NO
DRAWING NO CI-500
REV 0
SCALE 1" =50' -0"
SHEET NO

Plot Driver=Expo_H_pdf.plt Pentable=Expo_H.TBL USER=Alvaradof 9:23:48 AM 12/16/2008 W:\60022129 Expo 2_LA\cadd\Civil\Sheet\Grade Crossing\ci500.plg

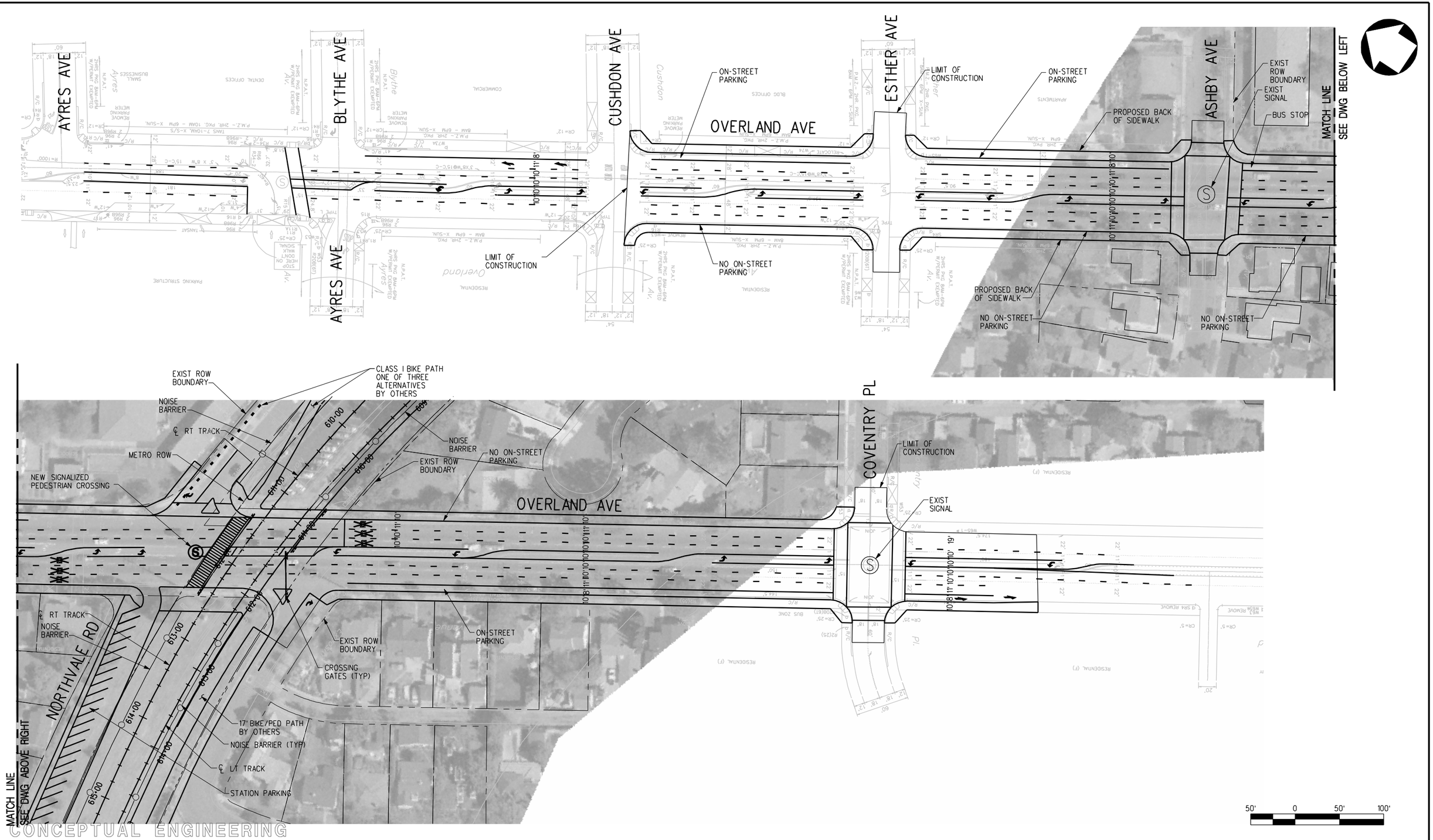

THE PREPARATION OF THIS DRAWING HAS BEEN FINANCED BY THE TAXES OF THE CITIZENS OF LOS ANGELES COUNTY AND OF THE STATE OF CALIFORNIA.

REV	DATE	BY	APP	REG NO	EXPIRES	SEAL HOLDER	DESCRIPTION
0	1/5/09	-	-	-	-		DRAFT EIR

DESIGNED BY J. SUSILO
DRAWN BY C. NATHAN
CHECKED BY J. AVENDANO
IN CHARGE L. J. MOHR
DATE 1/5/09

Exposition Metro Line Construction Authority
Expo

DMJM HARRIS | AECOM
707 WILSHIRE BLVD, SUITE 3300
LOS ANGELES, CALIFORNIA 90017
TEL (213) 243-5500 FAX (213) 243-5552

SUBMITTED
APPROVED

EXPOSITION TRANSIT PROJECT-PHASE 2

GRADE CROSSING PLAN
OVERLAND AVENUE

CONTRACT NO
DRAWING NO CI-600
REV 0
SCALE 1" =50' -0"
SHEET NO

Plot Driver=Expo_H_pdf.plt Pentable=Expo_H.TBL USER=Alvaradof 9:24:04 AM 12/16/2008 W:\60022129 Expo 2_LA\cadd\Civil\Sheet\Grade Crossing\ci600.plg

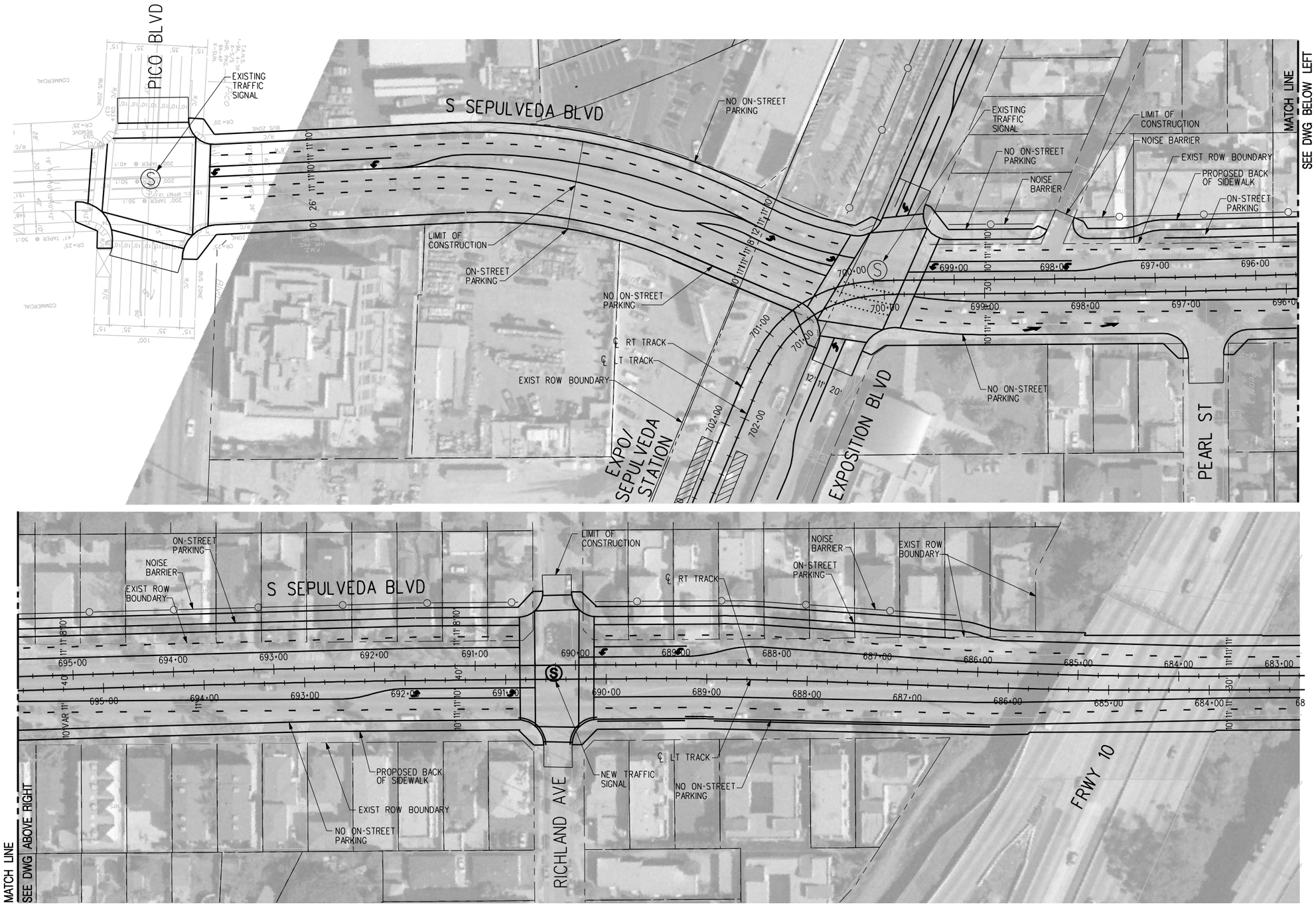

CONCEPTUAL ENGINEERING

50' 0 50' 100'

THE PREPARATION OF THIS DRAWING HAS BEEN FINANCED BY THE TAXES OF THE CITIZENS OF LOS ANGELES COUNTY AND OF THE STATE OF CALIFORNIA.

REV	DATE	BY	APP	REG NO	EXPIRES	SEAL HOLDER	DESCRIPTION
0	1/5/09	-	-	-	-		DRAFT EIR

DESIGNED BY J. SUSILO
DRAWN BY C. NATHAN
CHECKED BY J. AVENDANO
IN CHARGE L. J. MOHR
DATE 1/5/09

Exposition Metro Line Construction Authority
Expo

DMJM HARRIS | AECOM
707 WILSHIRE BLVD, SUITE 3300
LOS ANGELES, CALIFORNIA 90017
TEL (213) 243-5500 FAX (213) 243-5552

SUBMITTED
APPROVED

EXPOSITION TRANSIT PROJECT-PHASE 2

GRADE CROSSING PLAN
VENICE SEPULVEDA ALIGNMENT
SEPULVEDA BLVD AT-GRADE

CONTRACT NO
DRAWING NO CI-700
REV 0
SCALE 1"=50'-0"
SHEET NO

Plot Driver=Expo_H_pdf.plt Pentable=Expo_H.TBL USER=Alvaradof 9:24:32 AM 12/16/2008 W:\60022129 Expo 2_LA\cadd\Civil\Sheet\Grade Crossing\ci700.plg