2. PROJECT ALTERNATIVES

2.1 Introduction

Six alternatives are evaluated in detail in this ~~Draft~~ Final Environmental Impact Report (~~D~~FEIR) for the Exposition Corridor Transit Project Phase 2 (Expo Phase 2) project: the No-Build Alternative, Transportation Systems Management (TSM) Alternative, and four Light-Rail Transit (LRT) Alternatives. This chapter describes the physical and operating characteristics of these alternatives. The chapter also includes a discussion of alternatives that were initially considered during the screening process and withdrawn from detailed consideration as a result of that screening.

The No-Build Alternative is included to allow reviewers to compare the impacts of the LRT Alternatives or TSM Alternative with the impact of doing nothing. A TSM Alternative is included as a lower-cost way to address the transportation problems in the corridor. A range of potential LRT Alternatives were developed and subjected to a two-step screening process to identify those that meet the Purpose and Need defined in Chapter 1 (Introduction), weighed against environmental and operating criteria.

In response to comments on the DEIR, the Expo Authority continued extensive outreach with agencies, key stakeholders, and the community throughout the preparation of the FEIR. Additional technical and environmental analysis was also conducted in the FEIR. These efforts resulted in changes to the LRT Alternatives and new design options that are incorporated into the FEIR. The proposed project changes and design options are described in this chapter.

2.2 No-Build Alternative

The No-Build Alternative consists of the existing transit services as well as improvements explicitly committed to be constructed by the year 2030 as defined in the Southern California Association of Governments (SCAG) Regional Transportation Plan (RTP).[19]

The CEQA Guidelines state that the "purpose of describing and analyzing a no project alternative is to allow the public and decision-makers to compare the impacts of approving the proposed project with the impacts of not approving the proposed project" (14 *California Code of Regulations* ("CEQA Guidelines") Section 15126.6(e)(1)). The No-Build Alternative is included in the EIR to provide a basis for comparison of what would happen if a LRT Alternative or the TSM Alternative is not approved.

The CEQA Guidelines make a distinction between the environmental "baseline" and the no-project alternative analysis. The CEQA Guidelines provide that the impacts of a project are normally determined by comparing the impacts of the project against the "physical environmental conditions in the vicinity of the project" (CEQA Guidelines Section 15125(a)). The CEQA Guidelines provide, however, that the EIR shall also examine "what would be reasonably expected to occur in the foreseeable future if the project were not approved, based on current plans and consistent with available infrastructure and community service" (CEQA Guidelines Section 15126.6(e)(2)).

[19] *2008 Regional Transportation Plan: Making the Connections*, adopted May 2008.

Consistent with the CEQA Guidelines, the No-Build Alternative is defined to consist of the existing transit services as well as improvements explicitly committed to be constructed by the year 2030 as defined in the SCAG RTP. Accordingly, this No-Build Alternative includes only transit service and roadway construction projects that are programmed and funded and would be expected to occur, independent of and regardless of whether one of the proposed TSM or LRT Alternatives is approved. Of the various programmed construction improvements contained in the SCAG RTP, only the I-405 Carpool Lane~~s~~/Widening Project (between US101 and I-10 freeways) ~~northbound and southbound between the US 101 Freeway and SR-90, and southbound between Waterford and the I-10 Freeway (I-405 widening project)~~; the I-10/Robertson Boulevard Interchange; and the Overland Avenue Bridge Widening (over I-10) are located in or near the Expo Phase 2 project area.

In accordance with the CEQA Guidelines, the EIR evaluates the impacts of the project alternatives against existing conditions. The EIR also evaluates projected future traffic and air quality conditions with and without the project. This is necessary so that the public and the decision-makers may understand the future impacts on traffic and air quality of approving and not approving the project. In this manner, the EIR evaluates both the impact of the project alternatives against current environmental conditions as well as comparing the impacts of the project against projected future traffic and air quality conditions.

The future traffic and air quality conditions are based on the adopted official demographic and projections for the project area and region. Past experience with the adopted demographic projections indicate that it is reasonable to assume that the population of the project area and the region will continue to increase over the life of the project. The projected population increases will, in turn, result in increased traffic congestion and increased air emissions from mobile sources in the project area and in the region.

2.2.1 No-Build Fixed Guideway Service Assumptions

A “fixed guideway” refers to any transit service that uses exclusive or controlled rights-of-way or rails, entirely or in part. The term includes heavy rail, commuter rail, light rail, monorail, trolleybus, aerial tramway, inclined plane, cable car, automated guideway transit, ferryboats, that portion of motor bus service operated on exclusive or controlled rights-of-way, and high-occupancy-vehicle (HOV) lanes.

Figure 2.2-1 (Metro ~~Rail~~ Fixed Guideway Service) and Table 2.2-1 (No-Build Alternative—Fixed Guideway Assumptions for Year 2030) detail the fixed guideway assumptions included in the No-Build Alternative. The Expo Phase 1 LRT and the Gold Line Eastside LRT Extension, which are currently under construction, are also assumed as well as the planned peak-only Wilshire Bus Rapid Transit (BRT) ~~Bus~~. The Metro Rail and BRT system connects to Metrolink commuter rail service at Union Station in Downtown Los Angeles, which provides service to six counties over nearly 400~~512~~ route miles.

2.2.2 No-Build Bus Service Assumptions

The No-Build Alternative assumes there will be connections between the applicable local bus services and Expo Phase 1 stations. It is also assumed that bus routes currently terminating at the West Los Angeles Transit Center located at Washington/Fairfax will continue to serve that location while also connecting to the Expo Phase 1 stations at either La Cienega or Culver City.

Source: Metro, 2008; DMJM Harris, 2008.

Figure 2.2-1 Metro ~~Rail~~ Fixed Guideway Service

Table 2.2-1 No-Build Alternative—Fixed Guideway Assumptions for Year 2030

Line	Endpoints	Peak Headway (minutes)	Off-Peak Headway (minutes)
Metro Rail			
Purple	Union Station to Wilshire/Western	10	10
Red	Union Station to North Hollywood	5	10
Blue*	7th/Flower to Downtown Long Beach	5	10
Expo Phase 1	7th/Flower to Venice/Robertson	5	10
Gold	Atlantic to Sierra Madre Villa	5	10
Green	105/605 to Marine	5	10
Metro Liner BRT			
Orange	North Hollywood to Warner Center	5	10
Wilshire	Western Avenue to Centinela Avenue	2.5	5

SOURCE: LACMTA Countywide Modeling, June 28, 2007 and updated June 3, 2008.

* 10-minute peak headways between 7th/Metro and Willow, and between 7th/Metro and Pacific equates to combined 5-minute trunk headways between 7th/Metro and Willow.

The No-Build Alternative also assumes full implementation of the Metro Rapid Bus program, which includes 28 routes across the county, as well as planned peak-only BRT~~rapid bus lanes~~ along Wilshire Boulevard between Western Avenue and Centinela Avenue. Rapid bus routes in the study area include Lincoln Boulevard, Sepulveda Boulevard, Beverly Boulevard, Santa Monica Boulevard, Wilshire Boulevard, Olympic Boulevard, and Pico Boulevard.

The remainder of the bus network is based on the June 2007 service patterns of Metro, LADOT, Culver City, and Santa Monica Big Blue Bus, as well as committed enhancements to those services anticipated by 2030. Table 2.2-2 (No-Build Alternative—Study Area Routes) lists the study area routes and the corresponding headways.

Based on direction from Metro, the bus fleet is assumed to include a mix of articulated and higher-capacity 45-foot buses in 2030.

Table 2.2-2 No-Build Alternative—Study Area Routes

Line No.	Description	Existing (June 2007) peak headway, off-peak headway (min)	2030 No-Build peak headway, off-peak headway (min)
Metro Rapid (Line numbers for future routes subject to change)			
703	Lincoln Blvd (4th/Wilshire–Aviation Green Line)	15, 0	10 NB/15 SB, 0
704	Santa Monica Blvd (Ocean/Santa Monica–Hill/Pico)	NA	7, 15
706 (Rapid 6)	Sepulveda (UCLA–Aviation Green Line)	NA	5 NB/10 SB, 20
707 (730)	Pico (Ocean/Colorado–Wilshire/Western)	NA	10, 10

Table 2.2-2 No-Build Alternative—Study Area Routes

Line No.	Description	Existing (June 2007) peak headway, off-peak headway (min)	2030 No-Build peak headway, off-peak headway (min)
714	Beverly (Santa Monica/Canon–Pico/Grand)	15, 0	10, 0
720	Wilshire (Ocean/Colorado–Whittier/Goodrich)	4 EB/3 WB, 6	2.5, 5
728	W. Olympic (Union Stn–Ave of the Stars/SM Blvd)	NA	6, 12
Metro Local, Limited, and Express Bus Routes			
28	Olympic Bl, Olympic/Fairfax–Temple/Spring	6, 7.5	6, 7.5
	Olympic Bl, Century City–Temple/Spring	9, 15	NA
33	Venice Bl, Main/Sunset–Union Stn	7.5, 15	7.5, 15
333	Venice Blvd Ltd, 2nd/Santa Monica–6th/Main	7.5, 15	7.5, 15
220	Robertson Bl, Santa Monica/San Vicente–Venice/Robertson	40, 40	40, 40
534	Malibu Express, Trancas Canyon–WLA TC	15 WB/30 EB, 30	15 WB/30 EB, 30
City of Los Angeles Department of Transportation (LADOT)			
431	Sepulveda/Montana–Union Station	4 EB trp AM, 4 WB trp PM	45 EB, 0 (no change)
437	Venice (Wash/Pac)–Marina del Rey–LACBD (Temple)	6 EB trp AM, 6 WB trp PM	30 EB, 0 (no change)
Culver City Bus ~~Municipal Bus Lines~~			
1	Washington Bl	12, 15	12, 15
2	Sunkist Park	60, 60	60, 60
3	Crosstown (Century City–Fox Hills)	20, 20	20, 20
4	Fox Hills Mall–Jefferson Blvd–WLA TC	60, 60	30, 30
5	Braddock Dr	1 WB AM; 2 EB PM	90, 0
6	LAX–Sepulveda Bl–UCLA	12, 15	12, 30
7	Culver Bl	40, 40	40, 40
8	Playa Vista–LAX Limited (Playa Vista, Jefferson, Lincoln, LAX); may be combined into Rapid 6 line	NA	30, 30
Santa Monica Municipal Bus Lines			
1	UCLA–Santa Monica Bl–Venice	10, 10	10, 10
	UCLA–Santa Monica Bl–20th–SMC	NA	30, 30
2	UCLA–Wilshire Bl–Venice–Walgrove Ave	15, 20	15, 20
3	LAX–Lincoln Bl–UCLA	15, 30	10, 30
	LAX–4th/Santa Monica Bl	20 SB, 30	12 SB, 30
4	SM Civic Ctr–San Vicente Bl–Olympic/Westwood	30, 30	30, 30

Table 2.2-2 No-Build Alternative—Study Area Routes

Line No.	Description	Existing (June 2007) peak headway, off-peak headway (min)	2030 No-Build peak headway, off-peak headway (min)
5	6th/Wilshire–Olympic Bl–Pico/Rimpau	20, 30	20, 30
	Olympic/Sawtelle–Pico/Rimpau, WB	60, 0 WB	60, 0 WB
6	SMC–Palms–Venice/Robertson (formerly SMC)	NA	30 WB, 60
7	Pico Bl, SM to Pico/Rimpau	10, 10	7.5, 10
	Pico Bl Limited	20, 0 both directions	NA
8	4th/Wilshire–Ocean Park Bl–Westwood Bl–UCLA	15, 15	15, 15
9	SM–Temescal Canyon–Sunset Bl	30, 30	30, 30
10	Santa Monica–Union Stn	15, 30	15, 30
	Marine/Main–Union Stn	60 EB, 0	60 EB, 0
12	Pico/Robertson–Palms–UCLA	15, 15	15, 15
Super 12	Westwood & Palms Limited	15, 0 NB	12, 0 NB
13	Westside Pavilion–Pico/Rimpau	30, 0 WB	30, 0 WB
14	Culver City–Brentwood Village–Sepulveda/Moraga	12–15, 30	12, 30
Crosstown	miniBlue Crosstown: 14th/20th St Loop (formerly SM11)	15, 15 clockwise	15, 15 clockwise
Sunset	miniBlue Sunset: SMC Campus Connector–Airport/Centinela, Ocean Park, 20th–Colorado–Stewart–Pico loop	NA	15, 15

SOURCE: Connetics Transportation Group, 2008.
EB = eastbound; WB = westbound; NB = northbound; SB = southbound

2.2.3 No-Build Highway and Roadway Improvement Assumptions

The No-Build Alternative assumes that a number of highway and roadway improvements by other entities, which are currently in planning or under construction, will be in place. These include the: the I-405 Carpool Lane/Widening Project (between US 101 and I-10 freeways) ~~I-405 Freeway Carpool Lanes northbound and southbound between the I-10 Freeway and SR-90, and southbound between Waterford and the I-10 Freeway (I-405 widening project)~~; the I-10/Robertson Boulevard Interchange; and the Overland Bridge Widening over the I-10 Freeway.

2.3 TSM Alternative

The Transportation Systems Management (TSM) Alternative identifies transit improvements above and beyond the No-Build Alternative as defined above with the goal of improving transit services as much as possible without making major capital investment in new infrastructure, and specifically without constructing the Expo Phase 2 project.

The TSM Alternative would involve three basic components: addition of a rapid bus route connecting downtown Culver City with downtown Santa Monica; associated service improvements on selected north/south routes to feed stations along the new rapid bus route; and service improvements on selected routes connecting Westside communities to the Expo Phase 1 terminus.

2.3.1 Rapid Bus Service

The new rapid bus route would roughly parallel the routing of the LRT Alternatives between Culver City and Santa Monica. The rapid bus would operate on headways of five minutes during the peak periods and ten minutes during the midday. The route would begin at the Expo Phase 1 terminus and travel north on Robertson Boulevard, west on National Boulevard, north on Westwood Boulevard, west on Olympic Boulevard, and north on 4th Street in Santa Monica. The route would loop around Broadway, Ocean Avenue, Santa Monica Boulevard, and back to 4th Street on its return to Culver City. Stops would be at roughly half-mile intervals. Headways for weekdays, Saturdays, and Sundays are shown in Table 2.3-1 (TSM Alternative—Rapid Bus Service Headways).

Table 2.3-1 TSM Alternative—Rapid Bus Service Headways

Time Period	Hours	Service Headways (minutes)
Weekdays		
Early Morning	4:00 a.m. to 6: 00 a.m.	15–20
AM Peak	6:00 a.m. to 9:00 a.m.	5
Midday	9:00 a.m. to 3:00 p.m.	10
PM Peak	3:00 p.m. to 5:30 p.m.	5
Early Evening	5:30 p.m. to 7:00 p.m.	10
Late Evening	7:00 p.m. to 12:30 a.m.	15–20
Saturdays		
Morning	4:00 a.m. to 10:00 a.m.	15–20
Midday	10:00 a.m. to 7:00 p.m.	10–15
Late Evening	7:00 p.m. to 12:30 a.m.	15–20
Sundays/Holidays		
Morning	4:00 a.m. to 10:00 a.m.	15–20
Midday	10:00 a.m. to 7:00 p.m.	10–15
Late Evening	7:00 p.m. to 12:30 a.m.	15–20

SOURCE: Connetics Transportation Group, 2008.

2.3.2 Feeder Service and other Service Improvements

Although the study area enjoys an existing high level of service, improvements would be made on several north/south routes to feed stops along the new rapid bus route. Improvements would be made to transit services along Robertson Boulevard, Culver Boulevard, Sepulveda Boulevard, 14th Street, 20th Street, and Lincoln Boulevard.

These service improvements would improve connections between the Expo Phase 1 terminus/Expo 2 Rapid Bus and various Westside communities such as Culver City, West Hollywood, Palms, West Los Angeles, Westwood/UCLA, Santa Monica, Mar Vista, and Marina del Rey.

Table 2.3-2 (2030 TSM Alternative [Compared to 2030 No-Build]—Study Area Routes) lists the study area routes and the corresponding headways, and highlights the changes as compared to the No-Build Alternative.

Table 2.3-2 2030 TSM Alternative (Compared to 2030 No-Build)—Study Area Routes

Line No.	Description	2030 No-Build (peak headway, off-peak headway [min])	2030 TSM (peak headway, off-peak headway [min])
Metro Rail			
EXPO	7th/Flower to Venice/Robertson	5, 10	5, 10
Metro Rapid (Line numbers for future routes subject to change)			
701	*Expo 2 (Venice/Robertson–4th/Broadway)*	*NA*	*5, 10*
703	*Lincoln Blvd (4th/Wilshire–Aviation Green Line)*	*10 NB/15 SB, 0*	*10 NB/15 SB, 30*
704	Santa Monica Blvd (Ocean/Santa Monica–Hill/Pico)	7, 15	7, 15
706 (Rapid 6)	Sepulveda (UCLA–Aviation Green Line)	5 NB/10 SB, 20	5 NB/10 SB, 20
707 (730)	Pico (Ocean/Colorado–Wilshire/Western)	10, 10	10, 10
714	Beverly (Santa Monica/Canon–Pico/Grand)	10, 0	10, 0
720	Wilshire (Ocean/Colorado–Whittier/Goodrich)	2.5, 5	2.5, 5
728	W. Olympic (Union Stn–Ave of the Stars/SM Blvd)	6, 12	6, 12
Metro Local, Limited, and Express Bus Routes			
28	Olympic Bl, Olympic/Fairfax–Temple/Spring	6, 7.5	6, 7.5
33	Venice Bl, Main/Sunset–Union Stn	7.5, 15	7.5, 15
333	Venice Blvd Ltd, 2nd/Santa Monica–6th/Main	7.5, 15	7.5, 15
220	*Robertson Bl, Santa Monica/San Vicente–Venice/Robertson*	*40, 40*	*30, 30*
534	Malibu Express, Trancas Canyon–WLA TC	15 WB/30 EB, 30	15 WB/30 EB, 30
City of Los Angeles Department of Transportation (LADOT)			
431	Sepulveda/Montana–Union Station	45 EB, 0	45 EB, 0
437	Venice (Wash/Pac)–Marina del Rey–LACBD (Temple)	30 EB, 0	30 EB, 0
Culver CityBus ~~Municipal Bus Lines~~			
1	Washington Bl	12, 15	12, 15
2	Sunkist Park	60, 60	60, 60
3	Crosstown (Century City–Fox Hills)	20, 20	20, 20
4	Fox Hills Mall–Jefferson Blvd–WLA TC	30, 30	30, 30
5	Braddock Dr	90, 0	90, 0

Table 2.3-2 2030 TSM Alternative (Compared to 2030 No-Build)—Study Area Routes

Line No.	Description	2030 No-Build (peak headway, off-peak headway [min])	2030 TSM (peak headway, off-peak headway [min])
6	LAX–Sepulveda Bl–UCLA	12, 30	12, 30
7	*Culver Bl*	*40, 40*	*30, 30*
8	Playa Vista–LAX Limited (Playa Vista, Jefferson, Lincoln, LAX); may be combined into Rapid 6 line	30, 30	30, 30
Santa Monica Municipal Bus Lines			
1	UCLA–Santa Monica Bl–Venice	10, 10	10, 10
	UCLA–Santa Monica Bl–20th–SMC	30, 30	30, 30
2	UCLA–Wilshire Bl–Venice–Walgrove Ave	15, 20	15, 20
3	LAX–Lincoln Bl–UCLA	10, 30	10, 30
	LAX–4th/Santa Monica Bl	12 SB, 30	12 SB, 30
4	SM Civic Ctr–San Vicente Bl–Olympic/Westwood	30, 30	30, 30
5	6th/Wilshire–Olympic Bl–Pico/Rimpau	20, 30	20, 30
	Olympic/Sawtelle–Pico/Rimpau, WB	60, 0 WB	60, 0 WB
6	SMC–Palms–Venice/Robertson (formerly SMC)	30 WB, 60	30 WB, 60
7	Pico Bl, SM to Pico/Rimpau	7.5, 10	7.5, 10
8	4th/Wilshire–Ocean Park Bl–Westwood Bl–UCLA	15, 15	15, 15
9	SM–Temescal Canyon–Sunset Bl	30, 30	30, 30
10	Santa Monica–Union Stn	15, 30	15, 30
	Marine/Main–Union Stn	60 EB, 0	60 EB, 0
12	Pico/Robertson–Palms–UCLA	15, 15	15, 15
Super 12	*Westwood & Palms Limited*	*12 NB, 0*	*12 NB/30 SB, 30*
13	Westside Pavilion–Pico/Rimpau	30, 0 WB	30, 0 WB
14	*Culver City–Brentwood Village–Sepulveda/Moraga*	*12, 30*	*10, 20*
Crosstown	*miniBlue Crosstown: 14th/20th St Loop (formerly SM11)*	*15, 15 clockwise*	*15, 15 both directions*
Sunset	miniBlue Sunset: SMC Campus Connector–Airport/Centinela, Ocean Park, 20th–Colorado–Stewart–Pico loop	15, 15	15, 15

SOURCE: Connetics Transportation Group, 2008.
Routes with differences between No-Build and TSM are italicized.
EB = eastbound; WB = westbound; NB = northbound; SB = southbound

2.3.3 Highway and Roadway Improvements

There are no highway or roadway improvements included in the TSM Alternative, beyond those identified in the No-Build Alternative.

2.3.4 Fleet Requirements

The TSM Alternative would require twenty additional Metro buses, two additional Culver City buses, and fifteen additional Santa Monica Big Blue buses over the No-Build Alternative.[20]

2.4 LRT Alternatives

For the Expo Phase 2 project, various LRT Alternatives were carried through screening and further defined for the ~~D~~FEIR. These LRT Alternatives would begin at the terminus of Expo Phase 1 in Culver City and would terminate in downtown Santa Monica in the vicinity of the intersection of 4th Street and Colorado Avenue (refer to Appendix H for a fold out exhibit). Depending upon the alternative, the alignments between these two points would vary as follows:

- LRT Alternative 1 (Expo ROW–Olympic Alternative) (LRT 1) would utilize approximately 5 miles of the existing Exposition ROW from the Expo Phase 1 terminus until reaching the intersection with Olympic Boulevard in Santa Monica. From that point, the alignment would follow Olympic Boulevard to the proposed terminus station.
- LRT Alternative 2 (Expo ROW–Colorado Alternative) (LRT 2) would also utilize the existing Exposition ROW from the Expo Phase 1 terminus until reaching the intersection with Olympic Boulevard in Santa Monica. From that point, the alignment would continue within the Exposition ROW to west of 19th Street, then diverge from the Exposition ROW and enter onto Colorado Avenue east of 17th Street and follow the center of Colorado Avenue to the proposed terminus.
- LRT Alternative 3 (Venice/Sepulveda–Olympic Alternative) (LRT 3) would divert from the Exposition ROW at the Expo Phase 1 terminus and follow Venice and Sepulveda Boulevards until reaching the intersection with the Exposition ROW. The alignment would then continue westward along the Exposition ROW and Olympic Boulevard identical to LRT 1.
- LRT Alternative 4 (Venice/Sepulveda–Colorado Alternative) (LRT 4) would divert from the Exposition ROW at the Expo Phase 1 terminus and follow Venice and Sepulveda Boulevards until reaching the intersection with the Exposition ROW. The alignment would then continue westward along the Exposition ROW and Colorado Avenue identical to LRT 2.

To facilitate a detailed description and comparison, the LRT Alternatives have been divided into geographic segments as described below (refer to Appendix H for a foldout exhibit). The segments correspond roughly to physical boundaries between areas of the project, or alternate street alignments that the project would follow, and each LRT Alternative comprises some combination of three segments. This approach is used, where appropriate, throughout this section and the discussion of potential impacts in Chapter 3~~,~~ (Environmental Analysis), Chapter 4 (Construction Impacts), Chapter 5 (Other CEQA Considerations), Chapter 6 (Financial Considerations), Chapter 7 (Comparison of Alternatives), and Chapter 8 (Community Participation and Public Engagement). Figure 2.4-1 (Project Map—By Segment) shows the locations of each of the segments.

[20] Expo Phase 2 Operating Plans & Assumptions, October 2008, prepared by Connetics Transportation Group.

- Segment 1 (Expo ROW, in LRT Alternatives 1 and 2)—Follows the Exposition ROW from the Expo Phase 1 terminus station in Culver City to the Exposition ROW/Sepulveda Boulevard intersection, approximately 2.8 miles in length
- Segment 1a (Venice/Sepulveda, in LRT Alternatives 3 and 4)—Follows westerly in the median of Venice Boulevard from the Expo Phase 1 terminus station in Culver City to the Venice and Sepulveda Boulevards intersection, then follows northerly in the center of Sepulveda Boulevard to the Exposition ROW/Sepulveda Boulevard intersection, approximately 3.7 miles in length
- Segment 2 (Sepulveda to Cloverfield, in All LRT Alternatives)—Follows the Exposition ROW from the Exposition ROW/Sepulveda Boulevard intersection to the Exposition ROW/Olympic Boulevard intersection, approximately 2.3 miles in length
- Segment 3 (Olympic, in LRT Alternatives 1 and 3)—Follows the median of Olympic Boulevard from the Exposition ROW/Olympic Boulevard intersection to the Phase 2 terminus at 4th Street and Colorado Avenue in Santa Monica, approximately 1.5 miles in length
- Segment 3a (Colorado, in LRT Alternatives 2 and 4)—Follows the Exposition ROW from the Exposition ROW/Olympic Boulevard intersection to west of 19th Street in Santa Monica. The alignment then diverges onto Colorado Avenue east of 17th Street and continues along the center of Colorado Avenue terminating between 4th Street and 5th Street, approximately 1.5 miles in length.

The segments comprising each of the LRT Alternatives are summarized in Table 2.4-1 (LRT Alternatives—Segment Summary).

Table 2.4-1 LRT Alternatives—Segment Summary

LRT Alternative	Segment 1: Expo ROW	Segment 1a: Venice/ Sepulveda	Segment 2: Sepulveda to Cloverfield	Segment 3: Olympic	Segment 3a: Colorado
LRT 1: Expo ROW–Olympic Alternative	●		●	●	
LRT 2: Expo ROW–Colorado Alternative	●		●		●
LRT 3: Venice/Sepulveda–Olympic Alternative		●	●	●	
LRT 4: Venice/Sepulveda–Colorado Alternative		●	●		●

SOURCE: DMJM Harris, 2008.

In response to comments received on the DEIR and after further analysis and coordination with various stakeholders, five design options have been added in the FEIR for the LRT Alternatives:

- Sepulveda Grade Separation Design Option
- Expo/Westwood Station No Parking Design Option
- Maintenance Facility Buffer Design Option
- Colorado Parking Retention Design Option
- Colorado/4th Parallel Platform and South Side Parking Design Option

2.4.1 Segment 1 (Expo ROW)—Exposition ROW from Expo Phase 1 Terminus to Sepulveda Boulevard (LRT Alternatives 1 and 2)

Alignment

Drawings of the proposed LRT alignment and profile in this segment are provided in Appendix E (Plan and Profile), Drawing Nos. T-008, T-007, T-006, T006-A, and T-005. Segment 1 is also shown in Figure 2.4-2 (Segment 1: Expo ROW).

As shown in Drawing T-008, this segment would start at the Venice/Robertson Station, the terminal station of Expo Phase 1. This station is an aerial station located within the Exposition ROW between Venice Boulevard and Washington Boulevard in Culver City.

From this point, the alignment would proceed via an aerial structure over Venice Boulevard. The aerial structure from the Venice/Robertson Station to the northeast side of Venice Boulevard would be approximately 500 feet long and up to 30 feet high (to top of rail). The alignment would then transition to grade within the Exposition ROW on a retained fill embankment[21] beginning on the west side of Venice Boulevard and extending approximately 900 feet west of the street. Venice Boulevard would be reconstructed from back of sidewalk to back of sidewalk in this area to provide columns to support the aerial structure within a new raised ~~the~~ median island of Venice Boulevard. The roadway geometry would be modified to accommodate the island, while maintaining the same number of existing traffic lanes. This street reconstruction would extend approximately 300 feet east and west on Venice Boulevard. The reconstruction would occur within the existing street right-of-way along with additional acquired property.

After returning to grade, the alignment would continue within the Exposition ROW and would cross Bagley Avenue at grade. The project would include a barrier system, such as fencing or sound walls, parallel to and on both sides of the LRT trackway to prevent trespassing. The at-grade crossing would have warning devices that would include audible warnings, signage and flashing lights, and gates to prevent entry into the trackway when trains pass. The intersection of Bagley Avenue and Exposition Boulevard would be reconstructed along with the installation of a new traffic signal. ~~Sixty parking spaces would also be constructed along the Exposition ROW north of Venice Boulevard between Bagley Avenue and Durango Avenue~~ Adjacent to the LRT trackway, portions of Exposition Boulevard would be reconstructed.

Continuing west, the Exposition ROW currently crosses over National Boulevard/Palms Boulevard on a bridge (Drawing T-007). The existing bridge would likely be replaced with a wider bridge to accommodate a two-track alignment, or, the existing bridge could potentially be retained and a parallel new bridge built to accommodate the second LRT trackway. The proposed National/Palms Station would be located upon the existing embankment at grade within the Exposition ROW immediately west of the bridge. Further west, a pocket track would be created between the two tracks to allow for short-term train or maintenance equipment storage. Portions of the intersection of the National Boulevard/Palms Boulevard intersection would be reconstructed. Adjacent to the LRT trackway, portions of Exposition Boulevard would be reconstructed.

[21] A retained fill embankment is usually constructed at the transition between an aerial structure and at grade alignment. Concrete retaining walls or mechanically stabilized earth (MSE) walls (or other similar materials) are constructed on the sides of the guideway and fill material is placed between the retaining walls to provide a surface for the guideway. Further information is provided in Section 7.2 (Construction Scenario).

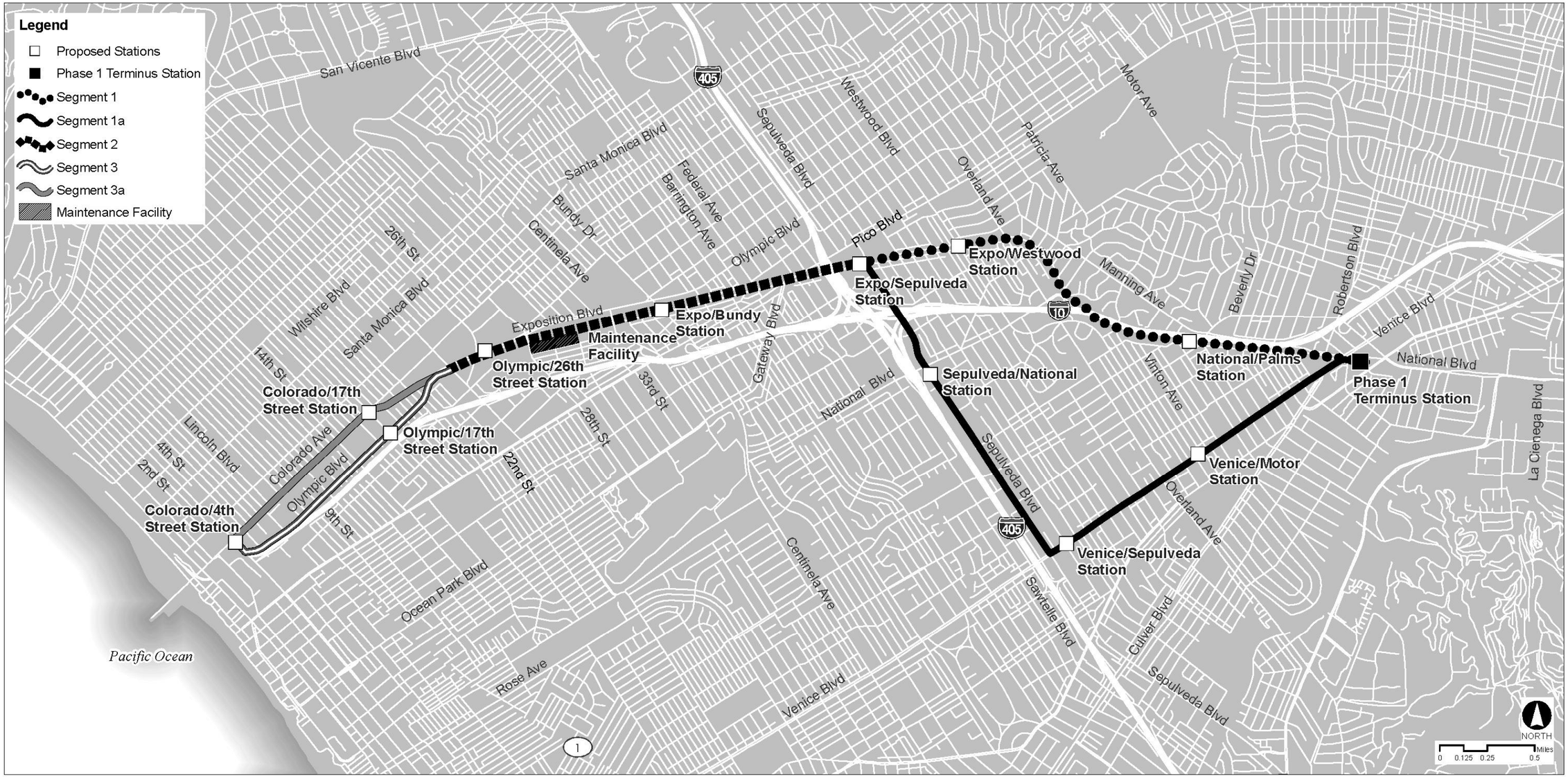

Source: Metro, 2008; DMJM Harris, 2008

Figure 2.4-1 Project Map—By Segment

Source: Metro, 2008; DMJM Harris, 2008

Figure 2.4-2 Segment 1: Expo ROW

The alignment would continue within the Exposition ROW and would cross over Motor Avenue on a bridge. The existing bridge would likely be replaced to accommodate a two-track alignment, or, as with the National Boulevard/Palms Boulevard crossing, it may be possible to retain the existing bridge and construct a parallel new structure to accommodate the second LRT trackway. West of Motor Avenue, the Exposition ROW narrows to 28 feet for a short distance and ~~a~~ partial property acquisitions[22] would be required on the south side of the alignment~~.~~ east and west of Motor Avenue for the construction of retaining walls and bridge abutments. The alignment would then cross under the I-10 Freeway through the existing box structure. The width and height of the box structure is adequate to accommodate a two-track alignment. Only minor modification of the box ~~would~~ should be needed to accommodate the LRT infrastructure. New wing walls would be constructed and tied into the existing box.

Throughout the length of the Exposition ROW extending from east of National Boulevard/Palms Boulevard until the crossing under the I-10 Freeway, retaining walls and barrier systems would be constructed along both sides of the alignment. These retaining walls would be required to separate the LRT alignment from the adjacent I-10 Freeway, which is parallel to but higher than the Exposition ROW, and from the adjacent Exposition Boulevard, which is parallel to but lower than the Exposition ROW.

The alignment would continue at grade along the Exposition ROW, which lies within an existing trench parallel to and south of Northvale Road (Drawing T-006). The right-of-way width is approximately 100 feet wide in this area and varies from 30 feet deep at the deepest point before coming to existing grade near Overland Avenue. The base of the trench would need to be widened to accommodate the two-track alignment configuration extending from the box under the I-10; therefore retaining walls would be required to support the side slopes of the trench in some locations. This widening would be within Exposition ROW and not require property acquisitions. A barrier system would continue parallel to and on both sides of the LRT trackway. The existing pedestrian bridge over the Exposition ROW to Palms Park would remain.

The alignment would continue within the Exposition ROW and would cross Overland Avenue at grade, with warning devices that would include audible warnings, flashing lights, and gates to prevent entry into the trackway when trains pass~~crossing gates~~. Overland Avenue would be widened by approximately 4 feet and reconstructed within the public right-of-way between Cushdon Avenue (north of the Exposition ROW) and Coventry Place (south of the Exposition ROW) to accommodate two additional lanes of traffic, one northbound and one southbound. This work would include reconstruction of the street, relocation of underground and overhead utilities, removal and replacement of trees and removal of some on-street parking. A traffic signal would allow pedestrians to cross Overland Avenue adjacent to the LRT crossing. In order to meet city standards, the Americans with Disabilities Act (ADA), and other requirements, reconstruction of curb returns may require minor acquisitions of property, up to 85 square feet in area, at the corners of a number of parcels on Overland Avenue.

After crossing Overland Avenue, the alignment would continue at grade and would cross Westwood Boulevard at grade, with warning devices that would include audible warnings, signs and flashing lights, and gates to prevent entry into the trackway when trains pass~~crossing gates~~. The Exposition ROW remains approximately 100 feet wide in this area and would include a

[22] Property acquisitions are discussed in detail in Section 3.16 (Socioeconomics) and shown in Appendix G.

continuation of the barrier system parallel to and on both sides of the LRT trackway. The proposed Expo/Westwood Station would be an at-grade side or center-platform station located within the Exposition ROW (on the east side of Westwood Boulevard). Westwood Boulevard would be widened by approximately 4 feet within the public ROW between Ashby Avenue (north of the Exposition ROW) and Richland Avenue (south of the Exposition ROW) to allow for two northbound lanes of traffic and bus stops on both sides of the street in close proximity to the station. This results in removal and replacement of street trees and sidewalks and removal of on-street parking. Narrow acquisitions of property would be required to provide for 11-foot sidewalks at bus stops. Bus stops are currently located north of Exposition Boulevard on the east and west sides of Westwood Boulevard. The east side bus stop would remain in its current location while the west side bus stop would be moved south of Exposition Boulevard. ~~A signalized pedestrian crossing of Westwood Boulevard would be provided adjacent to the LRT crossing to facilitate safe pedestrian crossings.~~

Portions of t~~T~~he Exposition Boulevard connections at Westwood Boulevard would be reconstructed within public right-of-way. On the north side of the Exposition ROW, Exposition Boulevard (west) would be reconfigured to provide a northbound turn pocket, while Exposition Boulevard (east) would be reconstructed to provide a northbound only turn lane. On the south side of the Exposition ROW, Exposition Boulevard (west) would be reconfigured to allow a southbound only turn lane, while Exposition Boulevard (east) would be reconfigured to allow only right turn in/right turn out movements into the station parking and existing alley. A new traffic signal system would be constructed, incorporating the intersections of Exposition Boulevard and Ashby Avenue with Westwood Boulevard and the LRT signal system.

From Westwood Boulevard, the alignment would proceed at grade within the Exposition ROW and would cross Military Avenue ~~and Sepulveda Boulevard at grade (Drawing T-005) with crossing gates. A double-track crossover would be provided at approximately Greenfield (Station 639+00). Signalized crossings of Sepulveda Boulevard would be provided adjacent to the LRT crossing to facilitate safe pedestrian crossing~~at grade (Drawing T-005). Within the LRT trackway, two adjacent single crossovers would be constructed between Westwood Boulevard and Military Avenue along with the continuation of the barrier system parallel to and on both sides of the LRT trackway. The Military Avenue crossing would have warning devices that would include audible warnings, flashing lights, and gates to prevent entry into the trackway when trains pass. Portions of the intersections of Military Avenue and Exposition Boulevard north and south of the Exposition ROW would be reconstructed. A new traffic signal would be installed at this intersection both north and south of the Exposition ROW.

The alignment would continue at-grade across Sepulveda Boulevard, with widening of Sepulveda Boulevard from two to three lanes in each direction (Drawing CI-400). The existing Sepulveda Boulevard signal system would be modified to allow for the at-grade crossing. It would have warning devices that would include audible warnings, flashing lights, and gates to prevent entry into the trackway when trains pass, and a median island for the gates north of Exposition Boulevard.

Sepulveda Boulevard would be widened by approximately ~~10~~20 feet, mostly within the public right-of-way ~~and with a partial~~. Partial acquisition of ~~one~~ adjacent propert~~y~~ies in the vicinity of the crossing would be required to accommodate an additional southbound and northbound through lane. On street parking would be removed from portions of Sepulveda Boulevard between Richland Avenue and Pico Boulevard. The street widening would extend ~~approximately 100 feet to the north of the Exposition ROW and would extend~~from Tennessee Avenue, north of

Pico Boulevard to Richland Avenue (south of the Exposition ROW). Several parcels would be impacted on the east side of Sepulveda Boulevard between Pico Boulevard and Tennessee Avenue and have been identified as partial acquisitions. In addition, Exposition Boulevard would be widened by approximately 12 feet within the existing public right-of-way on the east side of Sepulveda Boulevard. In order to meet city standards, ADA, and other requirements, reconstruction of curb returns may require minor acquisitions of property, up to 85 square feet in area, at the corners of a number of parcels on Sepulveda Boulevard. Adjacent to the station and LRT trackway, portions of Exposition Boulevard would be reconstructed.

Sepulveda Grade Separation Design Option

In addition to the proposed at-grade crossing, the Expo Authority has evaluated the issues associated with a potential grade separation along with an aerial station at Sepulveda Boulevard. In consultation with the LADOT and in response to comments on the DEIR, the Expo Authority has included the Sepulveda Boulevard grade separation and aerial station as a design option, subject to the provision of additional funding by others. The Sepulveda Grade Separation Design Option is shown in Appendix E (Plans and Profiles), Drawing T-005A.

Under this grade separated design option, the alignment would ascend starting west of Military Avenue to a bridge structure over Sepulveda Boulevard and an aerial station platform between Sepulveda Boulevard and the I-405 Freeway. Portions of the intersection of Sepulveda Boulevard and Exposition Boulevard would be reconstructed, as required to provide pedestrian and vehicular access to the station.

Stations

Segment 1 would have two stations as described below. All figures referred to in this section are found in Appendix F (Station Plans and Maintenance Facility). All stations would be ADA compliant.

National/Palms Station

The proposed National/Palms Station is to be located within the Exposition ROW just west of the aerial structure over National Boulevard/Palms Boulevard (Drawing A-900). The station would have a center platform, at least 270-foot-long and up to 30-foot-wide depending upon the width of the adjacent pocket track. Although the platform would be located at grade, the Exposition ROW is at a higher elevation than the adjacent streets in this area. Access to the platform would be provided from street level by stairs, ramps, and/or elevator. No station parking would be provided.

Expo/Westwood Station

The proposed Expo/Westwood Station would be an at-grade side or center-platform station and would be located within the Exposition ROW on the east side of Westwood Boulevard. The platform would be at least 270 feet long and 16 feet wide.

Approximately 170 surface parking spaces would be provided for the station. Approximately half of the spaces would be built on both sides of the alignment, extending between Overland Avenue and Westwood Boulevard. The parking areas would be partly situated within the Exposition ROW and partly within adjacent City of Los Angeles-owned right-of-way currently not developed. Vehicles utilizing the parking area on the north side of the alignment would enter

from Overland Avenue southbound and exit onto Westwood Boulevard northbound (i.e., one-way traffic). Vehicles utilizing the parking area on the south side of the alignment could enter and exit from either Overland Avenue (northbound or southbound) or Westwood Boulevard (northbound) (i.e., two-way traffic).

Expo/Westwood Station No Parking Design Option

In response to comments on the DEIR, a design option was added at the Expo/Westwood Station. The Expo/Westwood Station No Parking Design Option would eliminate the 170 surface parking spaces that were dedicated to transit patrons at the Expo/Westwood Station. As such, parking access from Overland Avenue, Selby Avenue, and Exposition Boulevard would be eliminated. To address community concerns regarding the loss of on-street parking along Westwood Boulevard, 20 parking spaces would be dedicated to neighborhood residents east of Westwood Boulevard and north of the LRT line. The Expo/Westwood No Parking Design Option is shown in Appendix E (Plans and Profiles), Drawing T-006A.

2.4.2 Segment 1a (Venice/Sepulveda)—Venice and Sepulveda Boulevards from Expo Phase 1 Terminus to Exposition ROW at Sepulveda (LRT Alternatives 3 and 4)

Alignment

Drawings of the proposed LRT alignment and profile in this segment are provided in Appendix E, Drawing Nos. T-012, T-011, T-010, and T-009. Segment 1a is also shown in Figure 2.4-3 (Segment 1a: Venice/Sepulveda).

As shown in Drawing T-012, this segment would start at the Venice/Robertson Station, which is the terminal station of Expo Phase 1. The Venice/Robertson Station is an aerial station located within the Exposition ROW between Venice Boulevard and Washington Boulevard in Culver City.

From this point, the alignment would proceed via an aerial structure and turn to the southwest into the median of Venice Boulevard. The aerial structure would be approximately 2,300 feet long and up to 30 feet high (to top of rail). The alignment would then transition to grade within the median of Venice Boulevard on a retained fill embankment. The embankment would be approximately 600 feet long and would begin east of Cardiff Avenue (Station 527+00 of Appendix E drawings) and would terminate just east of Delmas Terrace (Sta. 533+00). A crossover would be located west of Clarington Avenue (Sta. 545+00).

The alignment would continue at grade within the median of Venice Boulevard until west of Motor Avenue (Sta. 559+48), a distance of approximately 2,650 feet (Drawing No. T-011). The proposed Venice/Motor Station would be located at grade within the median of Venice Boulevard immediately east of Motor Avenue (Sta. 554+00).

Immediately west of Motor Avenue the alignment would transition to an aerial structure by means of a retained fill embankment. The embankment would be over 350 feet long and would gradually reach a height of up to 30 feet (to top of rail) at the point where it transitions to an aerial structure just east of Keystone Avenue (Sta. 563+00).

Source: Metro, 2008; DMJM Harris, 2008

Figure 2.4-3 Segment 1a: Venice/Sepulveda

The alignment would continue on the aerial structure within the median of Venice Boulevard and cross Overland Avenue. The structure would be approximately 1,100 feet long and up to 30 feet high (to top of rail). The alignment would then transition to grade within the median of Venice Boulevard on a retained fill embankment. The embankment would be over 400 feet long and would begin just east of Glendon Avenue (Sta. 574+00) and terminate at approximately Westwood Boulevard (Sta. 578+26).

The alignment would proceed at grade within the median of Venice Boulevard for approximately 1,100 feet and would then transition to an aerial structure over the intersection of Venice Boulevard and Sepulveda Boulevard. The embankment leading to the aerial structure would commence just west of Veteran Avenue (Sta. 590+00). It would be approximately 400 feet long and reach a height of up to 30 feet (to top of rail) before transitioning to the aerial structure just west of Military Avenue (Sta. 594+00). The aerial structure would continue in the median of Venice Boulevard before turning northwest into the center of Sepulveda Boulevard (Drawing T-010). An aerial station—Venice/Sepulveda Station—would be located on the aerial structure at approximately Bentley Avenue (Sta. 600+00) immediately before the alignment turns north onto Sepulveda Boulevard (at approximately Sta. 605+00).

Street reconstruction would be required along the entire length of the alignment along Venice Boulevard. On Venice Boulevard, the existing number of traffic lanes and the existing Class II bike lanes would be retained but street parking would be eliminated over much of the alignment.[23]

In addition, along Venice Boulevard, full and partial property acquisitions would be necessary to provide the necessary street width. Other partial acquisitions may be required to accommodate curb cuts to meet city standards, ADA, and other requirements.

After turning northwest into the center of Sepulveda Boulevard, the alignment would continue in an aerial configuration for approximately 500 feet before transitioning to a retained fill embankment (Sta. 609+00). The total length of the aerial structure from west of Military Avenue on Venice Boulevard to the transition to retained fill embankment on Sepulveda Boulevard would be approximately 1,500 feet and would be up to 30 feet above grade (to top of rail). After the transition, the alignment would then continue on retained fill embankment for approximately 900 feet until approximately Charnock Road (South) (Sta. 618+00). At this point, due to the fact that Sepulveda Boulevard slopes rapidly upwards between Venice Boulevard and Charnock Road (South), the elevation of the street and the embankment would coincide and the alignment would briefly come to grade.

Continuing north along the center of Sepulveda Boulevard, the alignment would again transition to a retained fill embankment just north of Charnock Road (South) (Sta. 619+25). After approximately 800 feet, this embankment would transition to an aerial structure just north of Westminster Avenue (Sta. 627+00). The aerial structure would continue within the center of Sepulveda Boulevard and would span the Sepulveda/National Boulevard intersection (Drawing T-009). The aerial structure would be approximately 4,400 feet long and would be up to 30 feet high (to top of rail). On the north side of National Boulevard the alignment would then transition to grade at approximately Sardis Avenue on a 300-foot-long retained fill embankment (Sta. 671+00 to Sta. 674+00). The alignment would continue at grade within the center of Sepulveda

[23] Parking impacts are discussed in Section 3.2 (Transportation/Traffic).

Boulevard until the intersection with the Exposition ROW (Sta. 700+07), a distance of approximately 2,600 feet. The proposed Sepulveda/National Station would be located just south of National Boulevard (Sta. 664+00) and would be an aerial station.

Two single-track crossovers would be included on the aerial structure. One would be just north of the Sepulveda Channel (Station 644+00) and the other just north of Queensland Street (Station 653+00).

Street reconstruction would also be required along the entire length of the alignment along Sepulveda Boulevard. The existing number of traffic lanes would be retained but the alignment would result in some restrictions on left-turn movements as the existing left-turn lanes would be used to accommodate the guideway within the center of the street and street parking would be eliminated over much of the alignment. There is an existing Class 3 bicycle route on Sepulveda Boulevard that would remain.

Sepulveda Boulevard would need to be widened by approximately 30 feet at the intersection with the Exposition ROW to accommodate the at-grade LRT tracks and an additional southbound through lane. The street widening would extend from approximately 100 feet to the north of the Exposition ROW to Richland Avenue (south of the Exposition ROW). In addition, approximately 12 feet of Exposition Boulevard would be widened within the public right-of-way and Exposition ROW on the east side of Sepulveda Boulevard.

Property acquisitions would also be required along Sepulveda Boulevard to accommodate the guideway and street improvements. Other partial acquisitions may be required to accommodate curb returns on both sides of the street to meet city standards, ADA, and other requirements.

The alignment would turn to the west in an at-grade configuration at the intersection of Sepulveda Boulevard and the Exposition ROW (Sta. 700+07).

Stations

Segment 1a would have three stations as described below. All stations would be ADA compliant. All figures referred to in this section are found in Appendix F.

Venice/Motor Station

The proposed Venice/Motor Station would be located at grade within the median of Venice Boulevard immediately east of Motor Avenue (Drawing A-~~1200~~1300). The station would have two approximately 270-foot-long, 12-foot-wide side platforms. No station parking would be provided.

Venice/Sepulveda Station

This proposed station would be constructed as part of the aerial structure over the Venice/Sepulveda intersection (Drawing A-~~1300~~1200). The station would be located above the median of Venice Boulevard to the east of Sepulveda Boulevard. It would have an approximate 270-foot-long, 23-foot-wide center platform. A street level transit patron plaza would be provided below the station. Signalized pedestrian crosswalks would allow access from the plaza to the north and south sides of Venice Boulevard. No station parking would be provided.

Sepulveda/National Station

This proposed station would be constructed as part of the aerial structure along Sepulveda Boulevard. It would be located just south of National Boulevard above the center of Sepulveda Boulevard and would have an approximate 270-foot-long, 23-foot-wide center platform (Drawing A-1100). Pedestrian access would be provided from the southwest and southeast corners of the Sepulveda/National intersection. Pedestrians would utilize the crosswalk to access the median in the center of Sepulveda Boulevard and then travel down the center of the median to a point below the platform. Additional access would be provided from the west side of Sepulveda Boulevard to a point below the center of the platform via a mid-block crossing at Clover Avenue (west).

Surface station parking for approximately 250 cars would be provided in the vicinity of the station. One parking location would encompass a portion of the block of currently occupied commercial uses at the northwest corner of the Sepulveda Boulevard/National Boulevard intersection. Vehicular access to this parking area would be from National Boulevard. A second parking location would be further south, at the corner of Sepulveda Boulevard and Clover Avenue, on two parcels currently occupied by a commercial use. Vehicular access to this parking area would be from Sepulveda Boulevard and Clover Avenue. All three parcels would be acquired to accommodate the guideway, stations, and associated street reconstruction.

2.4.3 Segment 2 (Sepulveda to Cloverfield)—Exposition ROW from Sepulveda Boulevard to Olympic Boulevard (All LRT Alternatives)

Alignment

Drawings of the proposed LRT alignment and profile in this segment are provided in Appendix E (Plan and Profile), Drawing Nos. T-005, T-005A, T-004, and T-003. Segment 2 is also shown in Figure 2.4-4 (Segment 2: Sepulveda to Cloverfield).

From Sepulveda Boulevard, the alignment would continue west within the Exposition ROW in an at-grade configuration. The proposed Expo/Sepulveda Station would be located immediately west of Sepulveda Boulevard (Sta. 65~~6~~5+00).

The alignment would transition to an aerial structure 600 feet west of Sepulveda, west of the proposed Expo/Sepulveda Station, and would cross under the elevated I-405 Freeway and over Sawtelle Boulevard in an aerial configuration (Drawing T-005). Alternately, if the LRT trackway is grade separated at Sepulveda Boulevard, the station would be aerial and the LRT trackway would continue on an aerial structure, underneath the I-405 Freeway. Refer to Appendix E (Plans and Profiles), Drawing No. T-005A.

Sawtelle Boulevard would be reconstructed from approximately 400 feet south of Exposition Boulevard to approximately 200 feet north of Pico Boulevard (Appendix E, Drawing No. CP-100). At the LRT crossing, the reconstructed street would be at a lower elevation than the existing street to maintain sufficient vertical clearance under the trackway structure for vehicles traveling along Sawtelle Boulevard. To match the proposed elevations of Sawtelle Boulevard, portions of Exposition Boulevard would be reconstructed at a lower elevation than the existing pavement. These transition zones would be approximately 400 feet west and 300 feet east of Sawtelle Boulevard.

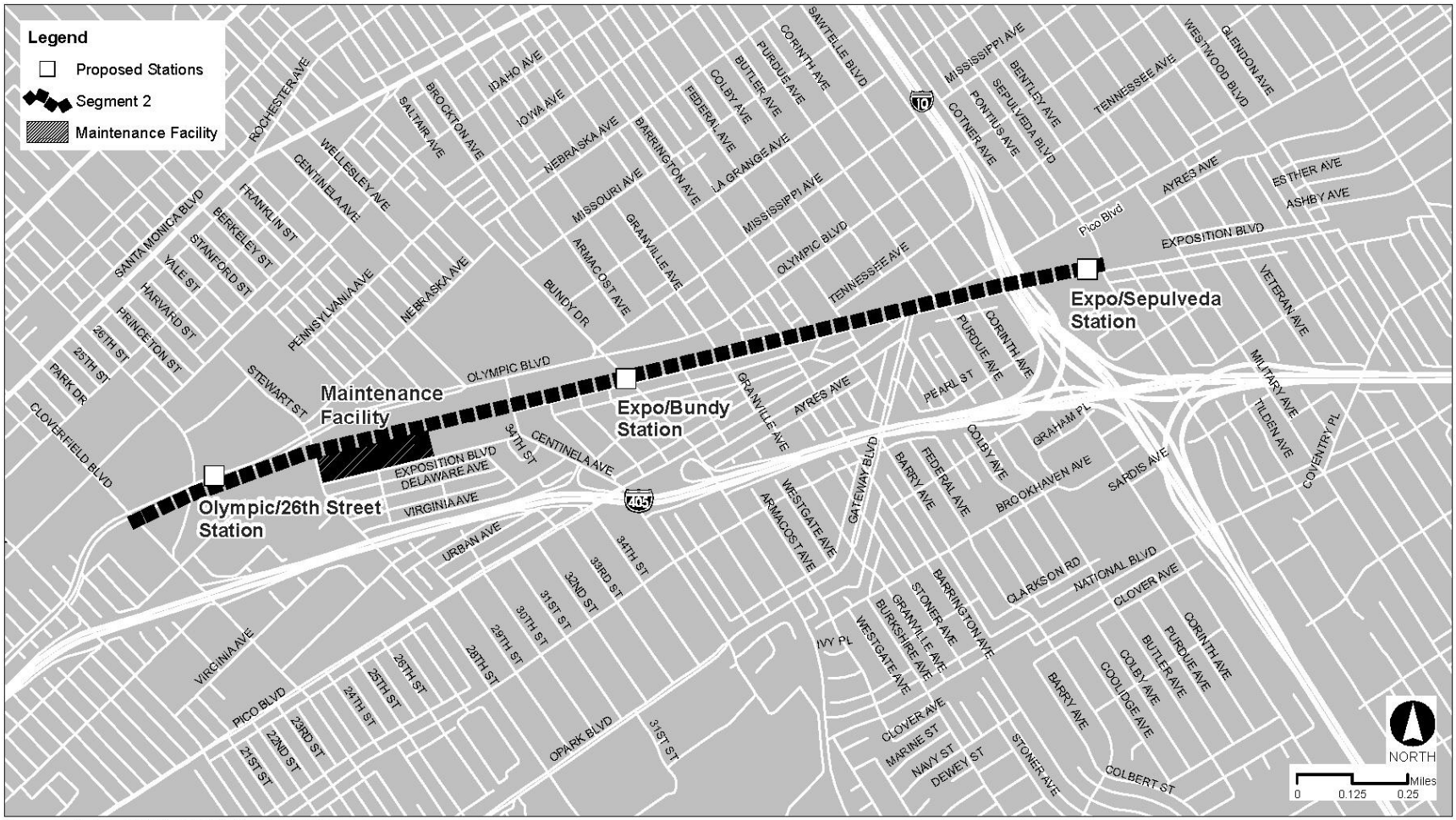

Source: Metro, 2008; DMJM Harris, 2008

Figure 2.4-4 Segment 2: Sepulveda to Cloverfield

Vehicular access would be maintained to the ~~properties~~ property at the southwest corner of Sawtelle Boulevard and Exposition Boulevard, however, the existing driveways and sidewalk would be reconstructed. At this corner, the sidewalk would be rebuilt at the existing elevation and a low retaining wall would be built between the sidewalk and the travel lanes. The sidewalk would be replaced on all four corners adjacent to the lowered street to provide pedestrian access at those corners. On the northwest and southeast corners, retaining walls would be built behind the sidewalk, on the property line. Grading (i.e., adjusting the ground level so that it is level or sloped to a specific incline) or a small retaining wall would be required on the northeast corner of Sawtelle Boulevard and Exposition Boulevard to meet existing grade. On the southwest corner, the entry to the multifamily housing structure would have to be modified to maintain access from the lowered street and reconstructed sidewalk to the building entrance ~~the sidewalk would be along the curb and integrated into the adjacent building entrance~~.

Pico Boulevard would be reconstructed from Gateway Boulevard to 400 feet east of Sawtelle Boulevard in order to match the new elevations on Sawtelle Boulevard as well as to construct a median island and to adjust the travel lanes to accommodate structural columns for the LRT (Drawing CP-200). The new back of sidewalk would be slightly lower than the existing elevations for up to 200 feet from Sawtelle Boulevard east and west on Pico Boulevard and 100 feet north of Pico Boulevard on Sawtelle Boulevard. Grading would be used where feasible to provide appropriate transitions. Access to some of the structures on the southwest corner of Pico Boulevard and Sawtelle Boulevard would be impacted by the change in elevation of Sawtelle Boulevard, necessitating reconstruction of some of the physical improvements on this site. Other locations may require curbs or short walls (height up to 18 inches) at the back of the sidewalk to maintain existing grades. ~~Partial and full property acquisition would be required on Sawtelle Boulevard and Pico Boulevard as a result of the profile changes.~~ Other partial acquisitions may be required to accommodate curb returns to meet city standards, ADA, and other requirements.

After crossing Sawtelle Boulevard, the aerial structure would continue west within the Exposition ROW and then cross over the Pico/Exposition/Gateway Boulevards intersection. The total length of the aerial structure would be approximately 1,500 feet and, with the exception of the crossing under the elevated section of the I-405 Freeway, would be up to 30 feet high (to top of rail). At the crossing under the I-405, the structure would be approximately 15 feet above grade (to top of rail). The Exposition ROW width is generally 100 feet throughout this area. The roadway alignment on Pico Boulevard would be adjusted so that a structural column would be constructed in a new raised median island. This would be accomplished within the existing street right-of-way and would maintain the same number of traffic lanes.

West of Pico Boulevard, the alignment would transition to grade via a retained fill embankment and have a barrier system, such as fencing or sound wall, parallel to and on both sides of the LRT trackway to prevent trespassing. The embankment would begin just west of Pico Boulevard (Sta. 675+00) and extend as far as Federal Avenue (Sta. 683+50), a length of 850 feet (Drawings T-004 and T-005). The alignment would cross Barrington Avenue at grade and would continue towards Bundy Drive. Immediately south of the Exposition ROW and east of Barrington Avenue, Exposition Boulevard would be reconfigured so that vehicle movements between Barrington Avenue and Exposition Boulevard would no longer be possible due to the proximity of the future crossing g~~r~~ates. A new traffic signal would be added for pedestrians to cross Barrington Avenue adjacent to the LRT trackway. Some street widening would also be required ~~in the vicinity of~~on Barrington Avenue and north of Pico Boulevard ~~(south of the Exposition~~

~~ROW)~~ on the west side of the street. Adjacent to the LRT, portions of Exposition Boulevard would be reconstructed.

As it approaches Bundy Drive, the alignment would transition to an aerial structure via a retained fill embankment. The embankment would begin at approximately Granville Avenue (Sta. 698+00) and extend as far as the east side of Bundy Drive (Sta. 707+50), a length of 950 feet. The proposed Expo/Bundy Station would be located immediately over the street (Sta. 710+00) or 300 feet to 400 feet to either the east or west of the street. The aerial structure would be approximately 400 feet long and up to 30 feet above grade (to top of rail). Street and curb reconstruction would occur within portions of Exposition Boulevard between Barrington and Centinela Avenues for the proposed station parking lot. Upon reaching the west side of Bundy Drive, the alignment would return to retained fill embankment between Bundy Drive and Centinela Avenue. A bridge structure, approximately 100 feet long, would span Centinela Avenue. West of Centinela Avenue, the alignment would transition to grade within the Exposition ROW on a retained fill embankment approximately ~~900~~ 600 feet west of ~~Bundy Drive~~Centinela Avenue (Sta. ~~711~~730+50 to ~~720~~724+50). This grade separation at Centinela Avenue was added to the project in the FEIR after further analysis and consultation with LADOT.

Continuing west, the alignment would continue at grade within the Exposition ROW for a distance of approximately 4,~~500~~100 feet and would cross~~ Centinela Avenue,~~ Stewart Street and 26th Street in an at-grade configuration with crossing gates (Drawing~~s~~ ~~T-004 and~~ T-003). Portions of Stewart and 26th Streets would be reconstructed adjacent to the crossing and would have warning devices that would include audible warnings, signs and flashing lights, and gates to prevent entry into the trackway when trains pass. Also, a barrier system, such as fencing or sound wall, would be included parallel to and on both sides of the LRT trackway to prevent trespassing.

A maintenance facility would be built between Centinela Avenue and Stewart Street, to the south of the Exposition ROW. This facility is described below at the end of Section 2.4.6 [Other Related Facilities]).

~~Approximately 10 feet of street widening would be required along Centinela Avenue between the Exposition ROW and Olympic Boulevard to accommodate an additional northbound lane of traffic. This would require a partial property acquisition on the west side of the street between the Exposition ROW and Olympic Boulevard. Exposition Boulevard would be reconstructed for approximately 100 feet east of Centinela.~~ A signalized crossing would be provided at Exposition Boulevard on Centinela Avenue to facilitate safe pedestrian crossings. Street and curb reconstruction would occur in this area, including reconstruction of portions of Exposition Boulevard between Centinela Avenue and Barrington Avenue.

Some minor street reconfiguration would be required at Stewart Street (approximately 85 square feet) to add a southbound through lane. Existing on-street parking would need to be eliminated on the east and west sides of the street for one block south of the Exposition ROW. In association with these modifications, the median on Olympic Boulevard would need to be reconstructed to allow for the addition of an eastbound right-turn lane and a westbound left-turn lane onto Stewart Street. The existing coral trees are not impacted by the turn lane changes and would be protected in place. These modifications would all occur within the existing street right-of-way. In addition, the lead tracks to the maintenance facility would be located within the

Exposition ROW west of Stewart Street, resulting in three sets of tracks crossing Stewart Street at grade.

The Exposition ROW decreases to a width of approximately 50 feet west of Stewart Street and further decreases to a minimum of approximately 30 feet just east of 26th Street. The proposed Olympic/26th Street Station would be located at grade immediately east of 26th Street (Sta. 760+00). As such, a partial acquisition of City of Santa Monica-owned property would be required on the south side of the Exposition ROW to accommodate the LRT tracks and proposed station.

Minor narrowing of the median islands on Olympic Boulevard would be required to allow change to the intersection lane configuration. The existing coral trees are not impacted by the turn lane changes and would be protected in place. Reconstruction of portions of eastbound Olympic Boulevard would be required in this area. Immediately west of 26th Street, the Exposition ROW increases to approximately 65 feet in width and the alignment transitions to an aerial structure over Cloverfield Boulevard and Olympic Boulevard, with retained fill embankments leading to and from the aerial structure. The embankment on the east side of Cloverfield Boulevard would be approximately 350 feet long (Sta. 765+50 to 769+00) and would gradually reach a height of up to 30 feet (to top of rail) at the point where it transitions to the aerial structure. The aerial structure over Cloverfield Boulevard would be approximately 1,000 feet in length and would be up to 30 feet high (to top of rail).

Stations

Segment 2 would have three proposed stations as described below. Stations would be ADA compliant. All figures referred to in this section are found in Appendix F.

Expo/Sepulveda Station

The proposed Expo/Sepulveda Station would be located within the Exposition ROW just west of Sepulveda Boulevard (Drawing A-700). The station would be at grade and would have two approximately 270-foot-long, 12-foot-wide side platforms. Access would be from Sepulveda and Exposition Boulevards. A parking structure would be constructed on the site of the existing surface parking lot of the City of LADOT property to the south of the station. The structure would have two decks above the existing surface parking. Each of the two decks would have approximately 130 spaces. The ground level would continue to accommodate existing LADOT parking requirements, while the other two levels would be for station parking. Vehicular access to this facility would be from Exposition Boulevard.

Alternately, with the grade separated design option at Sepulveda Boulevard, the station platform would be aerial, with a ground-level entry area and vertical circulation elements.

Expo/Bundy Station

This proposed station would be constructed as part of the aerial structure over Bundy Drive (Drawing A-600). The station would have an approximate 270-foot-long, 23-foot-wide center platform and would be located either immediately over the street or a short distance to either the east or the west of the street. Access to the platform would be by stairs and elevators at one or both ends of the platform.

Up to 250 surface parking spaces would be built within the Exposition ROW between Barrington Avenue and Centinela Avenue. Vehicular access to these spaces would be from Exposition Boulevard.

Olympic/26th Street Station

The proposed Olympic/26th Street Station would be located east of 26th Street in Santa Monica (Drawing A-500). The at-grade station would lie partially within the Exposition ROW, which narrows to a minimum of approximately 30 feet at this location, and partially within City of Santa Monica-owned property to the south of the Exposition ROW. It would be an at-grade station and would have an approximate 270-foot-long, 16-foot-wide center platform. No station parking would be provided.

2.4.4 Segment 3 (Olympic)—Olympic Boulevard from Exposition ROW to Santa Monica Terminus (LRT Alternatives 1 and 3)

Alignment

Drawings of the proposed LRT alignment and profile in this segment option, which would connect to Segment 2, are provided in Appendix E, Drawing Nos. T-003, T-002, and T-001. Segment 3 is also shown in Figure 2.4-5 (Segment 3: Olympic).

As shown in Drawing T-003, this segment would begin with an aerial structure over Cloverfield Boulevard which would enter the median of Olympic Boulevard. The aerial structure would be approximately 1,000 feet long and up to 30 feet high (to top of rail). As shown on Drawing T-002, Tthe alignment would transition to grade within the median of Olympic Boulevard on a 275-foot-long retained fill embankment that would terminate at approximately 21st Street (Sta. 781+75).

The alignment would continue at grade within the median of Olympic Boulevard until approximately Euclid Street (Sta. 812+50), a distance of approximately 3,100 feet, and would cross the 20th Street, 17th Street, and 14th Street intersections at grade in street running mode.[24] The proposed Olympic/17th Street Station would have split platforms and would be located within the median of Olympic Boulevard on the east and west sides of 17th Street. A double-track crossover[25] would be located at approximately 19th Street (Station 789+00).

Street reconstruction would be required along Olympic Boulevard between 20th Street and 14th Street to accommodate the LRT alignment and station. Some partial property acquisitions may be required to accommodate curb reconstruction to meet city standards, ADA, and other requirements. On-street parking would be removed between 22nd Street and 11th Street. Existing coral trees in the median of Olympic Blvd would be removed for the construction of the LRT trackway and station.

[24] Street-running mode is a mode of operation where train movement is manually controlled by the Train Operator in accordance with traffic signals and posted speed limits. Maximum allowable speed is 35 mph. Street-running territory refers to segments of mainline tracks where trains travel adjacent to vehicular traffic and are separated only by a median or barrier, per CPUC approval.

[25] A crossover is a connection between two adjacent tracks, allowing a train on one track to cross over to the other. When two crossovers are present in opposite directions, one after the other, the configuration is called a double crossover.

Source: Metro, 2008; DMJM Harris, 2008

Figure 2.4-5 Segment 3: Olympic

Immediately west of Euclid Street the alignment would transition to an aerial structure by means of a retained fill embankment. The embankment would be approximately 700 feet long extending from approximately Euclid Street (Sta. 812+50) to just east of 11th Street (Sta. 819+50) and would gradually reach a height of up to 30 feet (to top of rail) at the point where it would transition to an aerial structure (Sta. 819+50).

Continuing to the west, the alignment would be on aerial structure either above the median of Olympic Boulevard or adjacent to properties on the south side of Olympic Boulevard or adjacent to or above the embankment of the I-10 Freeway. The aerial structure would cross over the 11th Street, 10th Street, 9th Street, Lincoln Street, 7th Street and 5th Street intersections before turning north and terminating at the site of the proposed Colorado/4th Street Station at the corner of 4th Street and Colorado Avenue (Sta. 852+35). A double-track crossover would be provided on the aerial structure at approximately 6th Street (Station 841+00). Street reconstruction would be required on Olympic Boulevard between 7th Street (Sta. 836+00) and 5th Street (Sta. 845+50) to allow for column placement. Property acquisition for the proposed terminus station would be required.

The total length of the aerial structure from the east side of 11th Street to the terminus at 4th Street and Colorado Avenue would be approximately 3,300 feet and would be up to 35 feet above grade (to top of rail).

Stations

Segment 3 would have two stations as described below. Stations would be ADA compliant. All figures referred to in this section are found in Appendix F.

Olympic/17th Street Station

For the Segment 3 option, the proposed Olympic/17th Street Station would be a split-platform station located at grade within the median of Olympic Boulevard on the east and west sides of 17th Street (Drawing A-300). Each platform would be at least 270 feet long and 12 feet wide. No station parking would be provided.

Colorado/4th Street Station

The proposed Colorado/4th Street Station would be the western terminus of the project (Drawing A-100). It would be located on the site of an existing commercial block bounded by 4th Street, 5th Street, and Colorado Avenue. A significant portion of the station site is owned by the City of Santa Monica and was acquired for transit-related use. The station would be aerial and would have a two-platform/three-track configuration. Each platform would be at least 270 feet long and 16 feet wide. The station would be 35 feet above the grade of the Colorado Avenue/4th Street intersection and would be approximately 22 feet lower than the roof of the adjacent Macy's building located at the northwest corner of the intersection. Access to the platforms would be from the street level via stairs and elevators. After further consultation with the City of Santa Monica, no parking would be built at the Colorado/4th Street Station. Although, the approximate 215 parking space demand at this station would be provided through the City of Santa Monica's Downtown Parking Program. Transit patrons would use pubic designated parking spaces in nearby public parking facilities in downtown Santa Monica.~~Approximately 250 surface parking spaces would be located on the same block, adjacent to the station platforms. Vehicular access to the parking area would be from 5th Street.~~

2.4.5 Segment 3a (Colorado)—Colorado Avenue from Exposition ROW to Santa Monica Terminus (LRT Alternatives 2 and 4)

Alignment

Drawings of the proposed LRT alignment and profile in this segment option, which would connect with Segment 2, are provided in Appendix E, Drawing Nos. T-013, T-013, and T-014. Segment 3a is also shown in Figure 2.4-6 (Segment 3a: Colorado).

As shown on Drawing T-014, this segment would begin with an aerial structure over Cloverfield and Olympic Boulevards, and would continue westerly within the Exposition ROW to the west of Olympic Boulevard. The aerial structure would be approximately 800 feet long and as high as 30 feet (to top of rail) above grade. The alignment would transition to grade within the Exposition ROW on a retained fill embankment. The embankment would begin immediately west of Olympic Boulevard (Sta. 777+00) and end just east of 20th Street (Sta. 781+98).

The alignment would continue within the Exposition ROW from 20th Street until west of 19th Street in an at-grade configuration with ~~crossing gates, a distance of approximately 600 feet.~~warning devices that would include audible warnings, flashing lights, and gates to prevent entry into the trackway when trains pass. Also, a barrier system, such as fencing or sound wall, would be included parallel to and on both sides of the LRT trackway to prevent trespassing. A double-crossover would be required between 19th and 20th Streets. At this point the alignment would turn into the center of Colorado Avenue via an at-grade crossing at 17th Street and operate in street running mode. The proposed Colorado/17th Street Station would be located within the center of Colorado Avenue just west of 17th Street (Sta. 800+00).

From the proposed Colorado/17th Street Station, the alignment would continue at grade along the center of Colorado Avenue via embedded track to the terminus, a distance of approximately 5,500 feet, and would include at-grade crossings at 17th Street, 14th Street, 11th Street, Lincoln Boulevard, 7th Street, 6th Street, and 5th Street. Each of these crossings would be signalized for vehicular/pedestrian crossing. Vehicular left turns would no longer be permitted from Colorado Avenue to 16th, 15th, 14th, 12th, 11th, 10th, 9th, 7th, 6th, 5th Streets, Lincoln Boulevard and Euclid Street. After further consultation with the City of Santa Monica and Big Blue Bus, it was determined that buses would be permitted to turn left from westbound Colorado Avenue to the Big Blue Bus Maintenance Facility at 6th Street. This would require special signaling. Left turns from Colorado Avenue to 17th and 4th Streets would be permitted. Left turns from 17th, 14th, 11th, 7th, 6th, 5th, and 4th Streets and Lincoln Boulevard to Colorado Avenue will also be permitted.

The Colorado/4th Street Station terminus would be on the existing commercial block bounded by 4th Street, 5th Street, and Colorado Avenue, which is the same location as the Colorado/4th Street Station terminus described for the Segment 3 option.

Street reconstruction work and lane reconfiguration would be required along Colorado Avenue between approximately 18th Street and the terminus to accommodate the LRT alignment and 17th Street Station. Several commercial/industrial parcels would need to be acquired between 16th Street and 18th Street on the south side of Colorado Avenue in order to accommodate the transition from the Exposition ROW into Colorado Avenue and to accommodate an eastbound right-turn lane at Lincoln Boulevard. One lane of traffic would be retained in each direction along Colorado Avenue and on-street parking would be retained along the north side of the street ~~only~~. In addition, some partial parcel acquisitions may be required to accommodate curb return

Source: Metro, 2008; DMJM Harris, 2008

Figure 2.4-6 Segment 3a: Colorado

reconstruction in order to meet city standards, ADA, and other requirements, particularly on the planned bus routes.

Two crossovers would be required on Colorado Avenue, approaching the terminus station. Depending upon the 4th/Colorado Station configuration, they would be located either between 6th Street and 7th Street or between Lincoln Boulevard and 9th Street.~~A single-track crossover would be required between 6th Street and 7th Street, and a double-track crossover would be required between 19th Street and 20th Street.~~

Colorado Parking Retention Design Option

In response to comments from the City of Santa Monica, a Colorado Parking Retention Design Option was added to preserve on-street parking along Colorado Avenue. Under this design option, the width of the LRT trackway would be reduced by using track spacing less than 14 feet and the sidewalks would be less than 10 feet along selected portions of Colorado Avenue. Further, the Overhead Contact System (OCS) poles would be located within the sidewalks on either side of the street (versus in the center of the tracks), requiring the contact wires to span the entire street overhead. With the reduction in track spacing and sidewalk width, as well as placement of the OCS poles within the sidewalks, it may be possible to retain on-street parking along Colorado Avenue on both the north and south sides of the street. CPUC approval would be required for the reduction in track spacing. The Colorado Parking Retention Design Option is shown in Appendix E (Plans and Profiles), Drawing TX-001.

Stations

The Segment 3a option would have two stations as described below. Stations would be ADA compliant. All figures referred to in this section are found in Appendix F.

Colorado/17th Street Station

The proposed Colorado/17th Street Station would be located within the center of Colorado Avenue west of 17th Street (Drawing A-400). It would be an at-grade station and would have an approximate 270-foot-long, 16-foot-wide center platform. Up to 70 surface station parking spaces would be provided at the southeast corner of 17th Street and Colorado Avenue. Traffic volumes indicate the need for one through lane eastbound. In the eastbound direction, a second through lane may be desired for better bus-rail interface and a bus stop.

Colorado/4th Street Station

For the Segment 3a option, the proposed Colorado/4th Street Station would be located off-street on the existing commercial block bounded by 4th Street, 5th Street, and Colorado Avenue (A-200), which is the same location as for Segment 3.

The proposed station would be at grade similar to the level of 4th Street and would have a two-platform/three-track or a one-platform/three-track configuration that would occupy the site in a diagonal southwest-northeast configuration. Due to the slope of the site, away from Colorado Avenue, the platforms would be on fill, above the existing ground. A significant portion of the station site is owned by the City of Santa Monica~~ and was acquired for transit-related use~~. Each platform would be 16 feet wide and at least 270 feet long. After further consultation with the City of Santa Monica, no parking would be built at the Colorado/4th Street Station. Although, the

approximate 110 parking space demand at this station would be provided through the City of Santa Monica's Downtown Parking Program. Transit patrons would use pubic designated parking spaces in nearby public parking facilities in downtown Santa Monica.~~Approximately 225 surface parking spaces would be located on the same block adjacent to the station platforms. Vehicular access to the parking area would be from 5th Street.~~

Colorado/4th Parallel Platform and South Side Parking Design Option

In consultation with the City of Santa Monica, a Colorado/4th Parallel Platform and South Side Parking Design Option was added to the FEIR for the terminal station. Under this design option, the proposed Colorado/4th Street Station would be located on the same commercial block, but parallel to 4th Street. In addition, the track geometry leading to the station would be modified between the terminus and approximately 11th Street. With this track reconfiguration, the on-street parking would be retained on the south side of Colorado Avenue rather than the north side, between 5th Street and Lincoln Boulevard. The proposed platforms would be at-grade and would have a two-platform/three-track or a one-platform/three-track configuration. No parking would be built for the Colorado/4th Street Station under this design option, but instead, the approximate 110 parking space demand would be accommodated through the City of Santa Monica's Downtown Parking Program. The Colorado/4th Parallel Platform and South Side Parking Design Option is shown in Appendix E (Plans and Profiles), Drawing T-013A and Drawing TX-001 and Appendix F (Station Plans and Maintenance Facility), Drawing A-200A.

2.4.6 Other Related Facilities

This section discusses other required facilities that support the LRT Alternative alignments.

Traction Power Substations

Traction Power Substations (TPSS) are electrical substations that receive high voltage AC (alternating current) power provided by the power utility companies and transform the power to 750 Volt DC (direct current) power for distribution to the LRT vehicles. A TPSS is typically a metal prefabricated building approximately 15 feet wide by 43 feet long by 16 feet high. The TPSS site would also include a perimeter fence, and space for utility equipment, manholes, pull boxes, and allow vehicle access. The entire TPSS requires land on the order of 80 feet by 45 feet or equivalent area in different configurations; the actual size of the site will also depend on real estate considerations. Figure 2.4-7 (Typical Traction Power Substation Layout) shows a typical TPSS layout.

Overall, there are approximately eight TPSS sites required for LRT 1 and LRT 2 (Expo ROW alternatives) and nine TPSS sites for LRT 3 and LRT 4 (Venice/Sepulveda alternatives), situated in proximity to the alignment. Although final locations will be refined during Preliminary Engineering, the following are potential locations that have been studied, which include in some instances more than one potential location for the same TPSS:

- On Segment 1:
  - In the vicinity of National/Palms Station, on one or more of four parcels to the south of Exposition Boulevard and west of Clarington Avenue or, alternatively, on a parcel to the southeast of Exposition Boulevard and Hughes Avenue (Drawing No. T-007 Locations 1 and 2)

  - In the vicinity of the Expo/Westwood Station, within the Exposition ROW, east or west of Overland Avenue (Drawing No. T-006 Locations 3 and 4)

- On Segment 1a:
  - In the vicinity of Venice/Motor Station, on a parcel at the northwest corner of Venice Boulevard and Motor Avenue (Drawing No. T-011 Location 7)
  - In the vicinity of Venice/Sepulveda Station, on a parcel at the northeast corner of Venice Boulevard and Sepulveda Boulevard (Drawing No. T-010 Location 8)
  - In the vicinity of Sepulveda/National Station, on a parcel at the northwest corner of Sepulveda Boulevard and Clover Avenue (Drawing No. T-009 Location 9)

- On Segment 2:
  - In the vicinity of Expo/Sepulveda Station, within the Exposition ROW, east or west of Sepulveda Boulevard (Drawing No. T-009 or T-005 Locations 5 and 6)
  - On the ~~north~~ south side of the Exposition ROW to the east of Barrington Avenue (Drawing No. T-004 Location 10)
  - On the site of the proposed maintenance facility, south of the Exposition ROW, north of Exposition Boulevard, and east of Stewart Street (Drawing MF-100, MF-200, Location 17)
  - On ~~a parcel to~~ the Exposition ROW west of Cloverfield Boulevard ~~and south of the Exposition ROW~~ (Drawing No. T-003 Location 11)

- On Segment 3:
  - On one of four parcels to the south of Olympic Boulevard, west of 17th Street, and adjacent to the I-10 Freeway or, alternatively, on the I-10 Caltrans ROW near the Olympic/17th Street Station (Drawing No. T-002 Locations 12 and 13)
  - At the Colorado/4th Street Station site (Drawing No. T-001 Location 14)

- On Segment 3a:
  - On one of two parcels at the southeast corner of Colorado Avenue and 17th Street (Drawing No. T-014 Locations 15 and 16)
  - At the Colorado/4th Street Station site (Drawing No. T-013, T-013A Location 14)

Overhead Contact System

The light-rail line would be electrically powered. The electric current would come from a copper~~/bronze~~ contact wire that would be suspended above the track. A device called a pantograph on the roof of the LRT vehicle slides along the underside of the contact wire and delivers electric power to the vehicle. This contact wire and the poles and other structures that support it are collectively known as an Overhead Contact System (OCS). In a catenary system, the contact wire is supported from a parallel “messenger” wire that is directly above the contact wire. The messenger wire is then supported from cross-span wires or brackets as may be appropriate to the location. Typically, a low profile OCS system is used in urban/suburban settings to minimize the visual effect of the wires and poles. The low profile system will be used for all LRT Alternatives. The poles that support the OCS would be fabricated from steel pipe or other structural steel shapes and mounted on reinforced concrete foundations. The poles would project approximately ~~20~~ 23 to 32 feet above the track and would be spaced at ~~an average of~~

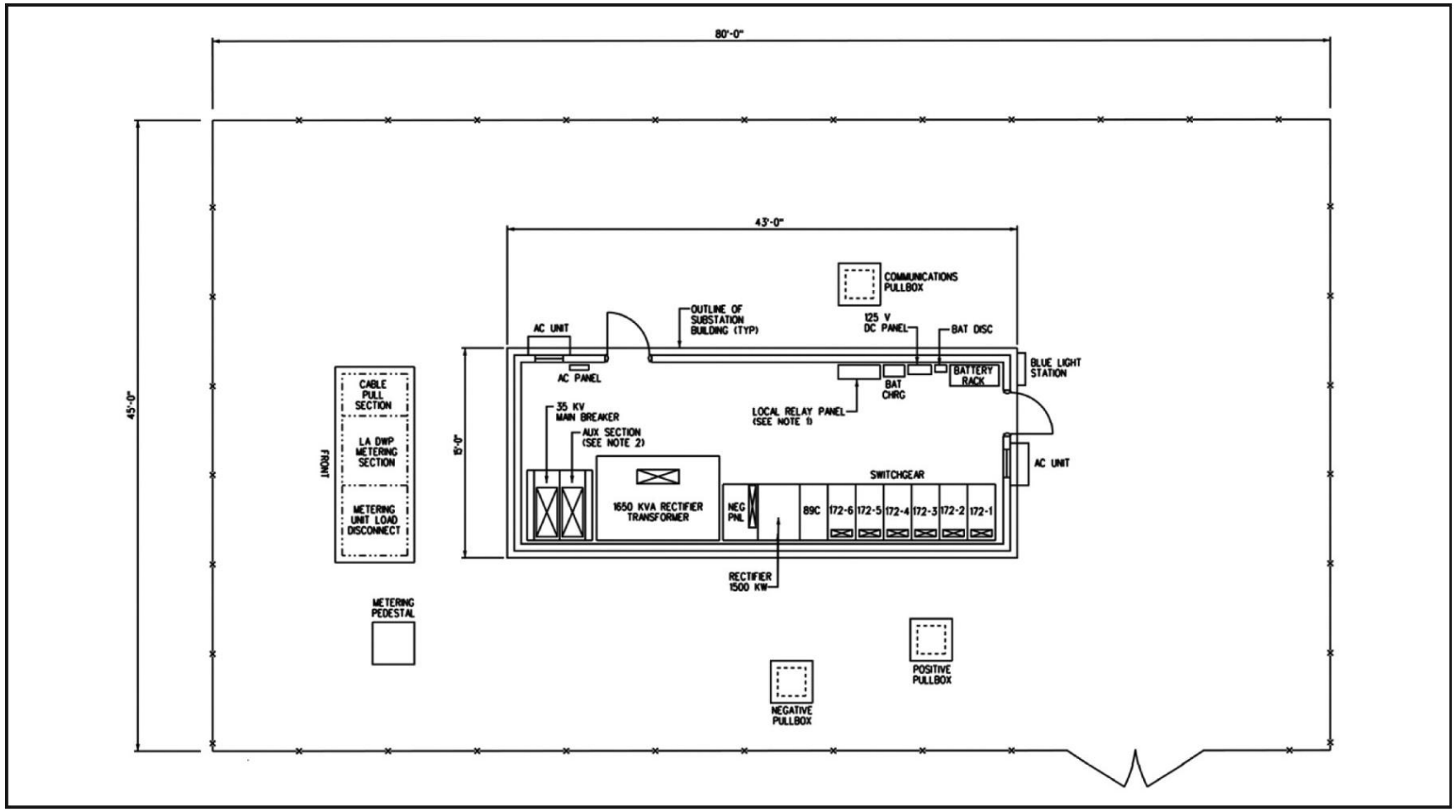

Source: Metro, 2008; DMJM Harris, 2008.

Figure 2.4-7 Typical Traction Power Substation Layout

approximately 150 feet apart. If other infrastructure, such as street lighting is also on the pole, a taller pole would be utilized and would require special consideration. Attachments to OCS poles would require Metro approval. Refer to Figure 2.4-8 (Typical Overhead Contact System) for a typical OCS.

Communication and Signal (C&S) Buildings

Communication and Signal (C&S) buildings house train controls and communications for LRT operations. C&S buildings are typically co-located with stations or TPSS sites or, ideally, adjacent to track interlockings.[26] They consist of pre-fabricated metal, concrete, or similar type of material buildings approximately 25 feet wide by 10 feet long by 12 feet high. Locations are presumed to be either on parcels to be acquired for TPSSs or within the Exposition ROW. The exact location of the C&S buildings would be determined during Preliminary Engineering.

Radio Towers

Up to two radio towers would be installed along the alignment to support communications. These could be located on *(i)* the Exposition ROW to the west of the Expo/Sepulveda Station (Drawing No. T-005), and *(ii)* the Caltrans ROW outside the shoulder of the I-10 Freeway just west of Motor Avenue (Drawing No. T-007).

The radio towers would be up to 70 feet high as measured from the ground level. Each tower would consist of tapered tubular steel 2 to 3 feet in diameter at its base, with a 15-foot by 15-foot concrete foundation and multiple antennas at the top, and an adjacent cabinet for the radio equipment.

For the Expo/Sepulveda Station location, the equipment cabinet could be integrated with the station equipment; while in the case of the I-10 Freeway location, the equipment cabinet could be free-standing. The exact quantity, locations, and dimensions of the radio towers would be determined during Preliminary Engineering.

Bicycle Facilities

Stations will include bicycle racks and lockers in accordance with *Metro Design Criteria*. According to *Metro Design Criteria*, bicycle facilities would be provided and the quantity would be based upon the projected ridership at that station. Specifically, the criteria address bicycle facilities as follows:

- Provisions shall be made for access to and from stations by bicycle, including their storage at station sites.
- Bicycle racks and lockers shall be placed at the station plazas near the station entrance.
- The total number of bicycle parking spaces per station should be at the rate of one space for every one thousand (1,000) predicted daily rail transit boardings for that station ... as space permits.[27]

[26] An interlocking is an arrangement of signals, switches, and control apparatus interconnected such that functions must succeed each other in a predetermined sequence. This prevents conflicting train movements at locations where tracks intersect such as at junctions or crossings.

[27] Per Metro Design Criteria, the minimum total number of bicycle parking spaces at any transit station shall be ten (10).

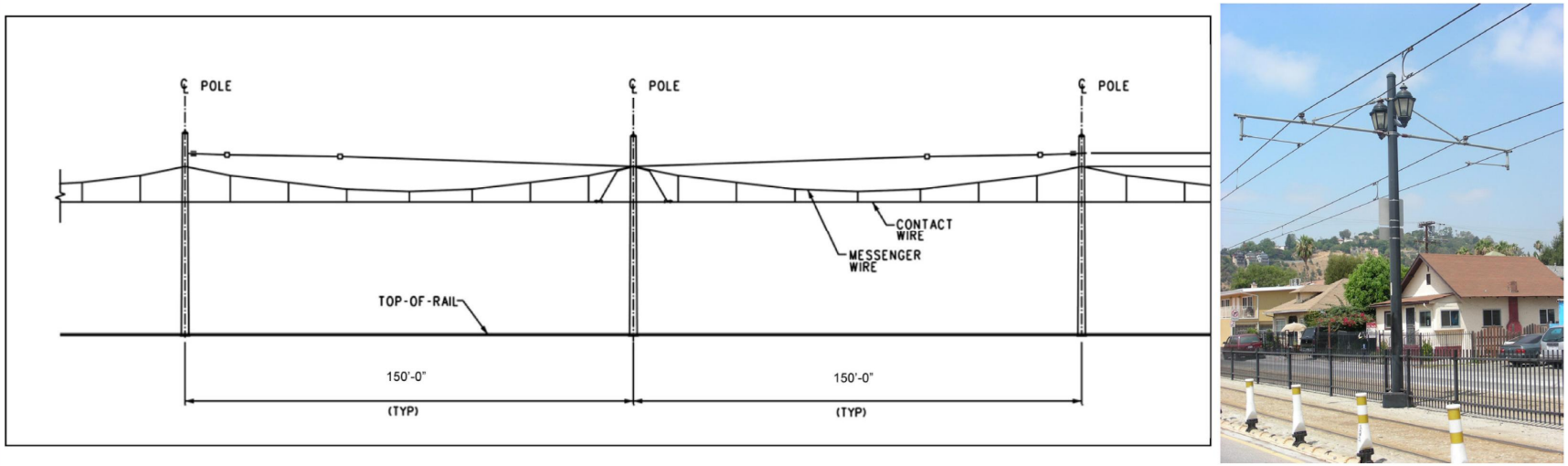

Source: Metro, 2008; DMJM Harris, 2008.

Figure 2.4-8 Typical Overhead Contact System

Additionally, a parallel bicycle facility (bike path, on street bike lane, or on street bike route) is being planned by ~~others~~ the cities of Los Angeles and Santa Monica, including allocation of funding sources. To the extent possible, this facility has been considered in the development of the LRT Alternatives. The Expo Authority or the cities intend to complete the design and build the parallel bicycle facility pending the completion of the environmental clearance and funding source allocation.

Maintenance Facility

A Maintenance Facility is proposed to be constructed as a part of the Expo Phase 2 project. The facility is to be designed and built to meet the maintenance needs of the ~~LRT~~light-rail vehicles (LRV) required to operate the Expo Phase 2 line.~~through the year 2030. It could operate 24 hours a day in three shifts. The following are components of the facility:~~

- ~~Outdoor storage for 20 to 36 LRT vehicles and associated storage track~~
- ~~Trackway to connect to the main line and allow the movement of LRT vehicles from the main line track to and within the maintenance facility area~~
- ~~Maintenance and Administration building with office and vehicle repair areas~~
- ~~Vehicle wash facility~~
- ~~Traction power substation~~
- ~~Parking for 65 to 70 employee automobiles~~

Location

The Maintenance Facility site would be located within the City of Santa Monica immediately south of the Exposition ROW, north of Exposition Boulevard, and east of Stewart Street. The site is 6.9 acres (300 feet by 1,000 feet) in size and is located on parcels currently owned by Verizon and Metro, and portions of two adjacent parcels east and west of the Verizon property. The site is bounded on the east by an industrial property, on the west by a parking lot, on the south (across Exposition Boulevard) by a residential area, and on the north by commercial properties. The site currently functions as a storage and maintenance facility for a light-industrial dispatch center. The layout for this facility is included in Appendix F (Station Plans and Maintenance Facility), Drawing MF-100.

Activities

The Maintenance Facility would accommodate daily servicing and cleaning, inspection and repairs, and storage of the LRVs. Activities may take place in the Maintenance Shop building and/or Maintenance Yard through the day and night depending upon the Expo Line train schedules, work load, and maintenance requirements of the LRVs.

The full program of activities and layout of the Maintenance Facility would be finalized during later stages of the design. However, the components of a standard Maintenance Facility are described in the *Metro Design Criteria* and would likely include the following:

Maintenance Shop for:

- LRV repair areas with maintenance pits, vehicle hoists, overhead lifting equipment, and open high-bay area

- Component repair shops
- Machine shop
- Parts cleaning facility
- Welding shop
- Battery shop
- Pantograph shop
- Wheel and axle shop
- Parts and equipment storage area
- Offices, training room, locker rooms, and administration areas
- Maintenance Facility operations center

Maintenance Yard for:

- LRV storage
- Enclosed car wash with blowers
- Cleaning platform
- Maintenance of Way vehicle storage
- Traction Power Substation (TPSS)
- Employee parking
- Under floor wheel truing facility (either within the shop or a separate building with the yard)
- Vehicle blowdown facility (undercar cleaning) (either with the shop or separate building within the yard)

Maintenance Shop

The Maintenance and Administration building (i.e., Maintenance Shop) would be approximately ~~300~~ 350 feet long and ~~166~~ 189 feet wide, approximately two stories in height, and with a total area of approximately 125,000 square feet. The building could be built of concrete block or corrugated metal or a combination thereof. The building would house four service tracks, each of which could hold a 3-car train set. The remainder of the building would have two usable floors for parts storage, offices, and other activities as required.

~~The Maintenance Facility site would be located on a parcel within the City of Santa Monica immediately south of the Exposition ROW, north of Exposition Boulevard, and east of Stewart Street. The site currently functions as a surface parking lot and light-industrial dispatch facility. The plans for this facility are included in Appendix F.~~

The total staff anticipated to be working at the facility would be 136, distributed over a 24 hour/7 day per week schedule. The work inside the shop would be of a technical nature and would typically include:

- Conducting computers tests on LRV on-board systems

- Adjusting electrical and electronic systems
- Replacing filters and light bulbs
- Replacing glass, floor coverings, and seating surfaces
- Changing brake shoes
- Wheel-truing LRV wheels to correct their profile

Maintenance Yard

As currently designed, the yard would have six storage tracks, each with sufficient length to store two 3-car train sets. Train sets could also park in the shop building, on the shop leads (i.e., the tracks leading to the shop building), on the cleaning and wash tracks, and on the run-around track. In addition, both the east and the west yard leads (i.e., the tracks leading from the mainline to the yard) would each have sufficient length for a 3-car train set. In total, the maintenance facility could accommodate approximately 43 to 45 LRVs without compromising efficiency.

Entry to the yard would be from two driveways on Exposition Boulevard. Surface parking for approximately 65 employee vehicles would be provided on the west side of the yard. An additional track crossing would be added to the Stewart Street at-grade crossing. As such, the two mainline tracks plus the west yard lead would cross Stewart Street. In addition, a TPSS would be located on the east side of the yard.

Work activity within the yard would typically be as follows:

- 4:00 a.m.–8:00 a.m.: LRV operators would arrive, pick up instructions in the operations office, then go to their assigned vehicle. They would then perform a visual inspection and testing of safety devices (i.e., horn) and move the vehicle onto the mainline for service.
- 8:00 a.m.–6:00 p.m.: There would be little activity in the yard as 85 to 90 percent of the LRVs would be in operation on the mainline. LRVs scheduled for work in the Maintenance Shop would be moved from the yard to the shop.
- 6:00 p.m.–2:00 a.m.: LRVs would return to the yard, proceed through the car wash facility, stop at the cleaning platform for removal of bulk trash, and then move to the storage tracks. Washing might not be performed every day. On days when washing is not done, LRVs would stop at the cleaning platform and then move to a storage track.

Maintenance Facility Buffer Design Option

Since the release of the DEIR and in response to comments, the Expo Authority has worked with the City of Santa Monica, Metro, and the community to identify alternative layouts for the Maintenance Facility. As a result of these collaborative efforts, a Maintenance Facility Buffer Design Option has been developed for evaluation in the FEIR. This design option would occupy only a portion of the Verizon site, with an extension of the facility into the existing Santa Monica College parking lot to the west. Utilization of the adjacent parking lot on the west side of the Verizon site would create an approximate 100- to 110-foot buffer between the Maintenance Facility and the residential area on the south side of Exposition Boulevard. The layout for the Maintenance Facility Buffer Design Option is shown in Appendix F (Station Plans and Maintenance Facility), Drawing MF-200.

The Maintenance Facility Buffer Design Option would accommodate the same facilities and activities as the original Maintenance Facility concept shown in Appendix F (Station Plans and Maintenance Facility), Drawing MF-100. Storage track capacity for approximately 43 to 45 LRVs would remain unchanged. However, the Maintenance and Administrative building would be located on the adjacent parking lot along Stewart Street, as opposed to the south side of the Verizon site along Exposition Boulevard. The two-story Maintenance and Administrative building would occupy approximately 60,000 to 65,000 square feet per floor (120,000 to 130,000 total square feet), similar to the original concept.

Parking spaces for approximately 65 employee vehicles would remain the same, although the surface parking lot would be located at the east end of the Maintenance Facility site instead of the west side as envisioned with the original concept. The main entrance to the Maintenance Facility for employee and visitor access would be in approximately the same location along Exposition Boulevard. In response to community concerns, access could possibly be provided on Stewart Street. The TPSS would continue to be located on the east side of the Maintenance Facility site, but would be shifted approximately 50 feet to the north closer to the LRT mainline tracks.

2.4.7 Operating Plans

LRT Service

For the LRT Alternatives, initial revenue/non-revenue hours would be from approximately 4:00 a.m. to 2:00 a.m. daily. As noted in Table 2.4-2 (LRT Alternatives—Service Headways), service headways would average five minutes for weekday peak periods and between 10 and 20 minutes for off-peak periods.

Table 2.4-2 LRT Alternatives—Service Headways

Time Period	Hours	Service Headways (minutes)
Weekdays		
Early Morning	4:00 a.m. to 6: 00 a.m.	15
AM Peak	6:00 a.m. to 9:00 a.m.	5
Midday	9:00 a.m. to 3:00 p.m.	10
PM Peak	3:00 p.m. to 5:30 p.m.	5
Early Evening	5:30 p.m. to 7:00 p.m.	10
Late Evening	7:00 p.m. to 12:30 a.m.	20
Saturdays		
Morning	4:00 a.m. to 10:00 a.m.	15
Midday	10:00 a.m. to 7:00 p.m.	10–15
Late Evening	7:00 p.m. to 12:30 a.m.	20
Sundays/Holidays		
Morning	4:00 a.m. to 10:00 a.m.	15–20
Midday	10:00 a.m. to 7:00 p.m.	10–15
Late Evening	7:00 p.m. to 12:30 a.m.	20

For LRT 1 (Expo ROW–Olympic Alternative), the estimated one-way travel time from the Expo Phase 1 terminus at Venice/Robertson Station in Culver City to the Expo Phase 2 terminus station in Santa Monica is 18.2 minutes, which equates to a 21.8 mph average operating speed. For LRT 2 (Expo ROW–Colorado Alternative), the estimated one-way travel time is 19.5 minutes, or an average operating speed of 20.3 mph.

For LRT 3 (Venice/Sepulveda–Olympic Alternative), the estimated one-way travel time between the same beginning and end points is 22.1 minutes, which equates to a 20.4 mph average operating speed. For LRT 4 (Venice/Sepulveda–Colorado Alternative), the estimated one-way travel time is 23.4 minutes, or an average operating speed of 19.2 mph.

Bus Service

Table 2.4-3 (2030 LRT Alternatives Compared to 2030 No-Build—Study Area Routes) lists the study area routes and the corresponding headways and highlights the changes associated with the LRT Alternatives as compared to the No-Build Alternative.

Fleet Requirements

The fleet requirements associated with the LRT Alternatives when compared to the No-Build Alternative are summarized in Table 2.4-4 (LRT Alternatives—Fleet Requirements [Changes to No-Build] for 2030) ~~below:~~. In consultation with Metro, fleet requirements were revised to include 47 light rail vehicles, regardless of the LRT Alternative, to interline (i.e., run) Metro Blue Line trains on the Expo Line. This number of light rail vehicles assumes 3-car trains at 6-minute headways based on operating issues associated with the Metro Blue Line.

Table 2.4-3 2030 LRT Alternatives Compared to 2030 No-Build—Study Area Routes

Line No.	Description	2030 No-Build Alternative peak headway, off-peak headway (min)	2030 LRT Alternatives peak headway, off-peak headway (min)
Metro Rail			
EXPO	*7th/Flower to Venice/Robertson*	*5, 10*	*5, 10*
Metro Rapid (Line numbers for future routes subject to change)			
701	Expo 2 (Venice/Robertson–4th/Broadway)	NA	NA
703	*Lincoln Blvd (4th/Wilshire–Aviation Green Line)*	*10 NB/15 SB, 0*	*10 NB/15 SB, 30*
704	*Santa Monica Blvd (Ocean/Santa Monica–Hill/Pico)*	*7, 15*	*7, 15*
706 (Rapid 6)	Sepulveda (UCLA–Aviation Green Line)	5 NB/10 SB, 20	5 NB/10 SB, 20
707 (730)	Pico (Ocean/Colorado–Wilshire/Western)	10, 10	10, 10
714	Beverly (Santa Monica/Canon–Pico/Grand)	15, 0	10, 0
720	Wilshire (Ocean/Colorado–Whittier/Goodrich)	2.5, 5	2.5, 5
728	W. Olympic (Union Stn–Ave of the Stars/Santa Monica Blvd)	6, 12	6, 12
Metro Local, Limited, and Express Bus Routes			
28	Olympic Bl, Olympic/Fairfax–Temple/Spring	6, 7.5	6, 7.5
33	Venice Bl, Main/Sunset–Union Stn	7.5, 15	7.5, 15
333	Venice Blvd Ltd, 2nd/Santa Monica–6th/Main	7.5, 15	7.5, 15
220	*Robertson Bl, Santa Monica/San Vicente–Venice/Robertson*	*40, 40*	*30, 30*
534	*Malibu Express, Trancas Canyon–WLA TC*	*15 WB/30 EB, 30*	*15 WB/30 EB, 30*
City of Los Angeles Department of Transportation (LADOT)			
431	Sepulveda/Montana–Union Station	45 EB, 0	45 EB, 0
437	Venice (Wash/Pac)–Marina del Rey–LACBD (Temple)	30 EB, 0	30 EB, 0

Table 2.4-3 2030 LRT Alternatives Compared to 2030 No-Build—Study Area Routes

Line No.	Description	2030 No-Build Alternative peak headway, off-peak headway (min)	2030 LRT Alternatives peak headway, off-peak headway (min)
Culver CityBus ~~Municipal Bus Lines~~			
1	Washington Bl	12, 15	12, 15
2	Sunkist Park	60, 60	60, 60
3	Crosstown (Century City–Fox Hills)	20, 20	20, 20
4	Fox Hills Mall–Jefferson Blvd–WLA TC	30, 30	30, 30
5	Braddock Dr	90, 0	90, 0
6	LAX–Sepulveda Bl–UCLA	12, 30	12, 30
7	*Culver Bl*	*40, 40*	*30, 30*
8	Playa Vista–LAX Limited (Playa Vista, Jefferson, Lincoln, LAX); may be combined into Rapid 6 line	30, 30	30, 30
Santa Monica Municipal Bus Lines			
1	UCLA–Santa Monica Bl–Venice	10, 10	10, 10
	UCLA–Santa Monica Bl–20th–SMC	30, 30	30, 30
2	UCLA–Wilshire Bl–Venice–Walgrove Ave	15, 20	15, 20
3	LAX–Lincoln Bl–UCLA	10, 30	10, 30
	LAX–4th/Santa Monica Bl	12 SB, 30	12 SB, 30
4	SM Civic Ctr–San Vicente Bl–Olympic/Westwood	30, 30	30, 30
5	6th/Wilshire–Olympic Bl–Pico/Rimpau	20, 30	20, 30
	Olympic/Sawtelle–Pico/Rimpau, WB	60, 0 WB	60, 0 WB
6	SMC–Palms–Venice/Robertson (formerly SMC)	30 WB, 60	30 WB, 60
7	Pico Bl, Santa Monica to Pico/Rimpau	7.5, 10	7.5, 10

Table 2.4-3 2030 LRT Alternatives Compared to 2030 No-Build—Study Area Routes

Line No.	Description	2030 No-Build Alternative peak headway, off-peak headway (min)		2030 LRT Alternatives peak headway, off-peak headway (min)
8	4th/Wilshire–Ocean Park Bl–Westwood Bl–UCLA	15, 15		15, 15
9	Santa Monica–Temescal Canyon–Sunset Bl	30, 30		30, 30
10	Santa Monica–Union Stn	15, 30		15, 30
	Marine/Main–Union Stn	60 EB, 0		60 EB, 0
12	Pico/Robertson–Palms–UCLA	15, 15		15, 15
Super 12	*Westwood & Palms Limited*	*12 NB, 0*		*12 NB/30 SB, 30*
13	Westside Pavilion–Pico/Rimpau	30, 0 WB		30, 0 WB
14	*Culver City–Brentwood Village–Sepulveda/Moraga*	*12, 30*		*10, 20*
Crosstown	*miniBlue Crosstown: 14th/20th St Loop (formerly SM11)*	*15, 15 clockwise*		*15, 15 both directions*
Sunset	miniBlue Sunset: SMC Campus Connector–Airport/Centinela, Ocean Park, 20th–Colorado–Stewart–Pico loop	15, 15		15, 15

SOURCE: Connetics Transportation Group, 2008

Routes in LRT Alternatives that are different than No-Build are italicized.

EB = eastbound; WB = westbound; NB = northbound; SB = southbound

Table 2.4-4 LRT Alternatives—Fleet Requirements (Changes to No-Build Alternative) for 2030

LRT Alternative	LRT Vehicles[a]	Metro Bus	Culver City Bus	Santa Monica Big Blue Bus
LRT 1: Expo ROW–Olympic Alternative	~~20~~47	1	2	16
LRT 2: Expo ROW–Colorado Alternative	~~23~~47	1	2	16
LRT 3: Venice/Sepulveda–Olympic Alternative	~~24~~47	1	11	22
LRT 4: Venice/Sepulveda–Colorado Alternative	~~26~~47	1	11	22

SOURCE: DMJM Harris, 2008; updated 2009.

a. These additional LRT vehicles can be accommodated at the Maintenance Facility on the storage tracks, as well as other tracks within the facility (e.g., shop lead tracks, cleaning and wash tracks, run-around track, etc).

2.5 Ridership

2.5.1 Ridership by Alternative

Total weekday boardings[28] for the TSM and the LRT Alternatives were estimated for 2030 using the Metro Travel Demand Model. Section 3.2 (Transportation/Traffic) provides additional information on Model methodology and analysis. The estimated results by Alternative are shown in Table 2.5-1 (2030 Phase 2 Total Weekday Boardings by Alternative).

Table 2.5-1 2030 Phase 2 Total Weekday Boardings by Alternative

Alternative	Boarding (Phase 2 Only)
TSM Alternative	10,206
LRT 1: Expo ROW–Olympic Alternative	36,653
LRT 2: Expo ROW–Colorado Alternative	36,412
LRT 3: Venice/Sepulveda–Olympic Alternative	35,880
LRT 4: Venice/Sepulveda–Colorado Alternative	35,849

SOURCE: AECOM, 2008.

2.5.2 Station Boardings

The Metro Travel Demand Model was also used to estimate weekday boardings at each station for the four LRT Alternatives. The estimated weekday boardings for each LRT Alternative are shown in Table 2.5-2 (2030 Phase 2 Weekday Station Boardings by LRT Alternative). It should be noted that the Total Weekday Boardings by LRT Alternative is higher than the Weekday Station Boardings. Total Weekday Boardings includes all boardings attracted to the LRT system

[28] Total w~~W~~eekday boardings include all instances of a person boarding the LRT system at any time during the typical weekday; only includes number of people who board or alight at each Expo Phase 2 station.

as the result of the extension of the system into the project area, e.g., a person boarding at 7th/Metro station heading west to a station within the Expo Phase 2 project is counted as a boarding. Weekday Station Boardings are the number of boardings occurring only at each station along the Expo Phase 2 system.

Table 2.5-2 2030 Phase 2 Weekday Station Boardings by LRT Alternative

Station	LRT 1: Expo ROW–Olympic	LRT 2: Expo ROW–Colorado	LRT 3: Venice/Sepulveda–Olympic	LRT 4: Venice/Sepulveda–Colorado
National/Palms	1861	1856	n/a	n/a
Expo/Westwood	5237	5213	n/a	n/a
Venice/Motor	n/a	n/a	2045	2050
Venice/Sepulveda	n/a	n/a	3292	3310
Sepulveda/National	n/a	n/a	2367	2354
Expo/Sepulveda	5096	5097	6135	6113
Expo/Bundy	2863	2811	2489	2443
Olympic/26th Street	2113	2116	2026	2003
Olympic/17th Street	2643	n/a	2469	n/a
Colorado/17th Street	n/a	3093	n/a	2912
Colorado/4th Street	3333	2906	2853	2557

SOURCE: AECOM, 2008.

2.6 Alternatives Considered and Withdrawn

2.6.1 Alternatives Evaluated During Alternatives Screening Process

At the beginning of the Alternatives Screening process in 2007, a range of modal and alignment options were considered. These alternatives included those originally described in the Notice of Intent (NOI),[29] along with alternatives that were brought forward by local governments, the public, or other stakeholders during the environmental scoping process. These alternatives were then screened with the objective of narrowing the alternatives to those most likely to meet the project purpose and need, fully defined in Chapter 1 (Introduction) and summarized in the discussion below.[30] Thus, the data presented below is as of April 2008.

Screening Alternatives Description

The alternatives considered in addition to the No-Build and TSM Alternatives are described below:

[29] The Expo Authority sent the Notice of Preparation (NOP) announcing the Expo Authority's intent to prepare a DEIS/DEIR to the California State Clearinghouse on February 22, 2007. The State Clearinghouse designated this as project no. 2007021109.

[30] Refer to *Final Alternatives Screening Report*, April 11, 2008, prepared for Exposition Metro Line Construction Authority by DMJM Harris.

- **LRT on the Exposition ROW:** This LRT Alternative would follow the Exposition ROW from the terminus of Expo Phase 1 in Culver City all the way to Santa Monica. The alignment would divert from the Exposition ROW at the western end upon reaching Olympic Boulevard. From this point, the alignment would follow Olympic Boulevard along the edge of the I-10 Santa Monica Freeway to reach the proposed terminus station at the intersection of 4th Street and Colorado Avenue in Santa Monica.
- **LRT on Venice/Sepulveda:** This LRT Alternative would divert from the Exposition ROW at the terminus of Expo Phase 1 in Culver City and follow Venice Boulevard until reaching the intersection with Sepulveda Boulevard. The alignment would then turn north and continue along Sepulveda Boulevard before turning west along the Exposition ROW. The alignment would then continue along the Exposition ROW similar to the LRT on the Exposition ROW Alternative.
- **BRT on the Exposition ROW:** Similar to the LRT on the Exposition ROW Alternative described above, this Bus Rapid Transit (BRT) Alternative would operate exclusively within the Exposition ROW from the terminus of Expo Phase 1 in Culver City all the way to Santa Monica. At the western end, upon reaching Olympic Boulevard, the bus service would divert from the Exposition ROW and operate along Olympic Boulevard, 11th Street and Colorado Avenue in mixed-flow traffic until reaching its terminus between 4th and 5th Streets on the south side of Colorado Avenue in Santa Monica.
- **LRT on Venice/Venice:** This LRT Alternative would divert from the Exposition ROW at the terminus of Expo Phase 1 in Culver City and follow Venice Boulevard west. The alignment would continue west on Venice Boulevard towards Venice Beach to a terminus station just east of Abbot Kinney Boulevard.
- **LRT on Venice Boulevard to Lincoln Boulevard to Santa Monica:** This LRT Alternative would divert from the ROW at the terminus of Expo Phase 1 in Culver City and follow Venice Boulevard west until reaching the intersection with Lincoln Boulevard. The alignment would then turn north and continue along Lincoln Boulevard toward Santa Monica. The alignment would cross over the I-10 Santa Monica Freeway and turn west along the north side of the freeway to reach the proposed terminus station at the intersection of 4th Street and Colorado Avenue in Santa Monica.
- **Web of LRT Routes on Culver Boulevard, Washington Boulevard, Pico Boulevard, and Santa Monica Boulevard:** This LRT Alternative would consist of several LRT routes along major boulevards, referred to as a “web network.”

  The Culver Boulevard Route would divert from the Exposition ROW at the terminus of Expo Phase 1 in Culver City and briefly follow Venice Boulevard before turning onto Culver Boulevard and continuing towards Marina Del Rey.

  Similarly, the Washington Boulevard Route would divert from the Exposition ROW at the terminus of Expo Phase 1 in Culver City and briefly follow Venice Boulevard before turning onto Culver Boulevard. After a short distance on Culver Boulevard, the alignment would turn onto Washington Boulevard and continue towards Venice Beach/Marina Del Ray.

  The Pico Boulevard Route could follow either the Exposition ROW alignment or the Venice/Sepulveda alignment from the terminus of Expo Phase 1 in Culver City until reaching the intersection with Pico Boulevard. The alignment would then divert from the Exposition ROW and continue straight on Pico Boulevard until reaching the intersection

with Lincoln Boulevard. The alignment would then turn north along Lincoln Boulevard and cross over the I-10 Santa Monica Freeway before turning west along the north side of the freeway to reach the proposed terminus station at the intersection of 4th Street and Colorado Avenue in Santa Monica.

The Santa Monica Boulevard Route could follow either the Exposition ROW alignment or the Venice/Sepulveda alignment from the terminus of Expo Phase 1 in Culver City until reaching the intersection of the Exposition ROW and Sepulveda Boulevard. The alignment would then go north along Sepulveda Boulevard until reaching the intersection with Santa Monica Boulevard. The alignment would then turn west and continue straight on Santa Monica Boulevard towards Santa Monica.

- **LRT Route on a Street other than Venice Boulevard, including Culver Boulevard, Washington Boulevard, Pico Boulevard, or Santa Monica Boulevard:** This LRT Alternative would involve an LRT alignment on one of the following streets: Culver Boulevard, Washington Boulevard, Pico Boulevard, or Santa Monica Boulevard. The details of each alignment are as described in Web of LRT Routes Alternative above.
- **Monorail on the Exposition ROW or Venice/Sepulveda:** This alternative would follow either the Exposition ROW or the Venice/Sepulveda alignments as described above. However, instead of LRT or BRT, this alternative envisions monorail technology.
- **PRT on the Exposition ROW or Venice/Sepulveda:** This alternative would follow either the Exposition ROW or the Venice/Sepulveda alignments as described above. However, instead of LRT or BRT, this alternative would use Personal Rapid Transit (PRT) vehicles.

Screening Methodology and Criteria

Screening was completed at two levels. The first screening, Level 1, was intended to narrow the nine alternatives above to those that showed the most promise to be successful in achieving some of the project objectives and purpose. The second screening, Level 2, completed a more in-depth evaluation of the remaining alternatives to determine which should be carried forth into the DEIR based on their ability to feasibly achieve the project purpose taking into account technical, environmental, and economic factors.

Level 1 Screening Criteria

The Level 1 screening was based on the following qualitative evaluation criteria:

- Effectiveness

  Effectiveness is comprised of two key elements: the ability of the alternative to address the purpose and need for the project and the compatibility of the project with the existing regional system.

  In Level 1 screening, purpose and need were evaluated particularly as it related to:

  - The compatibility of the proposed technology with those currently in use in the study area and the region;
  - Connection to the regional transit network in the county; and
  - The ability to serve activity and trip generating centers in the study area.

The other project objectives within purpose and need, including cost effectiveness, future growth, and transit oriented development, were evaluated under other screening Level 1 criteria and are discussed under costs and transit supportive land use, rather than purpose and need.

Regional compatibility addressed the ability of the technology to be integrated into the existing regional system. Technologies not in current use in the region and unproven in similar applications elsewhere in the country were considered incompatible and are eliminated on this criterion alone.

- Environmental Effects

  The Level 1 evaluation was based on a largely qualitative assessment of the project design issues that may lead to significant engineering and environmental issues. These issues may be insurmountable, result in high levels of environmental impact, or, when addressed, contribute significant capital or operating costs to the project.

  This involved an assessment of the magnitude of the impacts on the natural environment and on the community including:

  - Impacts on the Natural Environment (e.g., biological resources, geology and soils, hydrology and water quality, recreation and Section 4(f) resources, and cultural resources, etc.)
  - Community Impacts (e.g., aesthetics and visual quality, land acquisition and displacement/community disruption, hazards/hazardous materials, air quality, noise and vibration, and transportation, etc.)

- Costs

  This involved a qualitative assessment of the likelihood that the alternative could be achieved at a capital cost equal or less than the other alternatives. This assessment took into account potential costs that could be reasonably predicted based on similar projects in other locations including Expo Phase 1.

- Transit Supportive Land Use

  This involved a qualitative assessment of the comparative degree to which the individual alternatives would support transit usage. This included a review of projected population and employment as alternatives with higher population and employment typically experience higher transit ridership. Income, compatibility with community plans and environmental justice (e.g., disproportionate impact on minority or low income populations) considerations were also examined.

Level 2 Screening Criteria

The Level 2 screening involved a more in-depth evaluation of the alternatives remaining after the Level 1 screening and included such elements as:

- Effectiveness

  This involved an evaluation of the following measures of effectiveness as derived from the travel demand forecasting model and application of the Federal Transit Administration (FTA) Summit methodology for analysis of user benefit. The FTA has neither reviewed nor approved the analysis.

  - Project Boardings
  - Travel Time
  - FTA User Benefit

- Environmental

  This involved a more detailed assessment of land acquisition and parking impacts associated with the alternatives carried through to Level 2 screening.

- Costs:

  Preliminary capital and operating costs were prepared for each of the alternatives remaining after the Level 1 screening. In addition, the FTA Cost Effectiveness Index (CEI)[31] was calculated for each alternative to better understand the potential for each alternative to qualify for federal funding. The following measures were developed for each alternative:

  - Capital Cost
  - Operating Cost
  - FTA Cost Effectiveness Index

The Level 1 and Level 2 screening criteria are summarized in Table 2.6-1 (Screening Criteria).

Table 2.6-1 Screening Criteria

Screening Criteria	Level 1	Level 2
Effectiveness		
Purpose and Need		
• Linking to Major Trip Generators	●	
• Project Boardings		●
• Travel Time		●
• FTA User Benefit		●
Regional Compatibility		
• Compatible Technology	●	
• Transfers	●	
Environmental Effects		
Negative Impacts on the Natural Environment	●	
Negative Community Impacts	●	●
Costs		
Qualitative Cost Comparison	●	
Capital Costs		●
Operating Costs		●

[31] Details on the FTA Cost Effectiveness evaluation methodology are available at www.FTA.dot.gov/documents/FY_2009_Eval_Process.doc

Table 2.6-1 Screening Criteria

Screening Criteria	Level 1	Level 2
FTA Cost Effectiveness Index		●
Transit Supportive Land Use		
Demographics		
• 2030 Population	●	
• 2030 Jobs	●	
• 2030 Median Household Income	●	
Compatibility with Community Plans and Policies	●	
Environmental Justice	●	

Level 1 Screening Summary

Based on the Level 1 screening, the Exposition ROW Alternatives (LRT and BRT) resulted in the lowest levels of anticipated negative natural resource and community impacts, the lowest potential for negative impacts on environmental justice communities, the greatest consistency with community plans and policies, served the highest numbers of trip generators in the study area, and demonstrated solid future population and employment levels to support a future transitway.

The **LRT on Venice/Sepulveda** Alternative had high levels of anticipated impact associated with land acquisition, and related business and residential displacement. Some of the property acquisition could be reduced by implementing an aerial structure option with a total length of approximately 5,000 feet. This alternative had the potential for high impacts on environmental justice communities and no significant existing policy and plan support for an alignment along Venice and Sepulveda Boulevards. However, the alternative was supported by solid population and employment numbers and proximity to high numbers of trip generators in the study area.

The **LRT on Venice/Venice** Alternative had high levels of anticipated impact associated with land acquisition and related business and residential displacement. Much of this impact could be eliminated by implementing an aerial option but it would add substantial costs. In addition, the alternative had the potential for high impacts on environmental justice communities, no significant existing policy and plan support, linkage to a low number of major trip generators, and was poorly supported by current or future population and employment numbers. The forecast ridership for this Alternative was less than half the forecast ridership for the ROW and Venice/Sepulveda Alternatives. Thus, the effectiveness and efficiency of this Alternative was poor. This alternative was advocated by some members of the community in the scoping process.

The **LRT on Culver Boulevard and Washington Boulevard** Alternative had high levels of anticipated impacts related to land acquisition, and related business and residential displacements, and high levels of anticipated impacts on natural and community resources. They had low population and job numbers, and poor connectivity to trip generators in the study

area. As a result, it was recommended they be eliminated from any further consideration beyond Level 1 screening.

The **LRT on Venice/Lincoln, Pico Boulevard, and Santa Monica Boulevard** Alternatives all had moderate-to-high levels of anticipated natural resource and community impacts primarily related to property acquisition and related displacement of business and residents. These high levels of property acquisition contributed to significantly higher capital costs than other reasonable alternatives. As a result, further consideration of these alternatives was not recommended beyond Level 1 screening.

The **LRT Web Network** Alternative was also not recommended for further consideration due to the very high levels of anticipated natural resource and community impacts, primarily related to property acquisition and related displacement of business and residents, and high levels of impact on environmental justice communities. As a result, further consideration of this alternative was not recommended beyond Level 1 screening.

In summary, the **LRT and BRT on Exposition ROW** Alternatives were recommended to be carried forward to second-level screening. In addition, it was recommended that the Venice/Sepulveda LRT Alternative be included in the second-level screening, due to the population and jobs projections for the alignment. The Venice/Venice LRT Alternative was also recommended for second-level screening due to the community interest in this alignment.

Level 2 Screening Summary

The Level 2 screening provided additional quantified information regarding ridership, travel time savings, cost effectiveness, potential land acquisition impacts, on-street parking impacts, capital costs and operating costs. In addition, although not seeking federal funds for the project, the Exposition Metro Line Construction Authority (Expo Authority) applied a cost-effectiveness test based upon a nationally used formula for projects seeking federal major capital investment funding in order to assist policy makers and the public in comparing the relative merits of investing the various alternatives. Table 2.6-2 (Level 2 Screening Summary [Completed in April 2008]) summarizes the data included in the second level screening analysis completed in April 2008.

Table 2.6-2 Level 2 Screening Summary (Completed in April 2008)

	LRT Exposition ROW	LRT Venice/ Sepulveda	BRT Exposition ROW	LRT Venice Blvd to Venice Beach
Effectiveness				
Purpose and Need				
Project Boardings (2030)	41,400	34,700	24,100	17,200
Travel Time (Minutes in the transit vehicle between Downtown LA and Santa Monica)	44.0	49.3	47.0	50.5
2030 Daily User Benefit (above TSM)	14,400	11,300	5,400	2,400
Environmental Effects				
Property Acquisition/Relocation*	Low	High	Low	Medium–Low

Table 2.6-2 Level 2 Screening Summary (Completed in April 2008)

	LRT Exposition ROW	LRT Venice/ Sepulveda	BRT Exposition ROW	LRT Venice Blvd to Venice Beach
Parking Impacts	Low	High	Low	High
Costs (Develop a safe high-capacity transit system cost effectively.)				
Capital Costs (2007$)	$946M to $1,067M	$1,264M to $1,361M	$382M	$861M to $1,206M
Capital Cost/Mile (2007$)	$143M to $161M	$168M to $181M	$74M	$145M to $204M
Operating Costs	$37M	$33M	$30M	$26M
Cost Effectiveness Index	$18 to $20	$28 to $29	$19	$85 to $111

*ROW only; does not include stations, parking, TPSS sites, or curb cuts.

LRT Exposition ROW

The LRT Exposition ROW Alternative was projected to generate 41,400 average weekday boardings in the Year 2030, which was the highest of all of the alternatives. These numbers reflect the significant number of trip generators existing in the corridor and the transit supportive land use projected for the corridor. This alternative would also provide the fastest travel time to Santa Monica and would be approximately 3 to 7 minutes faster than the other three alternatives. The LRT Exposition ROW Alternative would also result in the highest level of transportation user benefit[32] of 14,400 hours.

The LRT Exposition ROW Alternative was found to have a low level of community disruption in terms of property acquisition and relocation. Only one full business parcel acquisition (comprised of ten business units) would be required while no residential parcels would be impacted.

The only measurable on-street parking loss associated with the LRT Exposition ROW Alternative would be along Olympic Boulevard. The 200-space parking loss in this segment would primarily impact Memorial Park, businesses and offices (i.e., daytime uses). Some underutilized parking would potentially be available in close proximity on side streets to offset the loss, but not enough to fully compensate. As such, some parking would be lost or required to be replaced on private property acquired for replacement parking.

For the screening process, two separate capital cost estimates were developed for the LRT Exposition ROW Alternative: one that envisioned a mostly at-grade alignment and another that envisioned aerial structures over major cross streets. The capital costs were estimated to range from $946M to $1,067M (in 2007 dollars). This is the second highest total cost of all of the alternatives.

[32] User Benefit is a measure of the savings in travel time in 2030 for the users of the new transit improvement expressed in hours of travel time saved over the time it would take them to make their trips if the project did not exist.

Annual operating costs were estimated to be $37M, which was the highest operations and maintenance costs of all of the alternatives. This was primarily because of the larger LRT vehicle fleet size required to serve the ridership demand and the vehicle maintenance costs associated with the fleet.

Based on the conceptual level capital and operating costs, the cost-effectiveness index (CEI)[33] for the LRT Exposition ROW Alternative was estimated to be $18 to $20, which falls in the midpoint of the medium rating and is similar to the BRT Exposition ROW Alternative.

In summary, the Level 2 screening concluded that the LRT Exposition ROW Alternative provided the best transit option at the lowest cost as reflected in the medium cost-effectiveness rating. This alternative also appeared likely to have the least long-term community disruption, particularly related to property acquisition and displacement and the elimination of on-street parking. It was recommended that this alternative be carried into the environmental document for more detailed evaluation.

LRT Venice/Sepulveda

The LRT Venice/Sepulveda Alternative was projected to generate 34,700 average weekday boardings in the Year 2030, which was less than the LRT Exposition ROW Alternative but higher than the other alternatives. This alternative would have a travel time of approximately 49 minutes which would be five minutes slower than the LRT Exposition ROW Alternative and is associated with the additional length and additional station stop. The LRT Venice/Sepulveda Alternative would also result in a transportation user benefit of 11,300. The reduction in user benefit over the LRT Exposition ROW Alternative reflects the longer trip time and the reduced benefits to trips for major trip generators north of the Overland/Westwood area.

The property acquisitions associated with an at-grade alignment along Venice/Sepulveda would be extensive and would result in substantive community disruption. Twenty-one full multifamily parcel acquisitions, 43 partial multifamily acquisitions, 3 full single-family acquisitions, 3 partial single-family acquisitions, 15 full business parcel acquisitions, and 41 partial business parcel acquisitions would be required.

The possibility of reducing impacts by implementing an aerial structure was evaluated. An aerial structure generally reduces the total width of ROW required and the resultant property acquisitions. However, ROW would still be required for stations and approach structures where the alignment would be required to transition from aerial to at-grade. An aerial alternative would require 16 full multifamily parcel acquisitions, 9 partial multifamily acquisitions, two full single-family acquisitions, two partial single-family acquisitions, plus three full business parcel acquisitions.

Although aerial structures would reduce the property impacts to some degree, they would contribute a dominant visual element to the neighborhood/community. The extent to which that element impacts the neighborhood/community would be different depending on the length of the aerial structure and the conditions in the surrounding area. The aerial structure on Venice Boulevard for the Venice/Sepulveda Alternative would be 1.9 miles in length. An aerial structure in a very low rise neighborhood that is on flat terrain, like the conditions along Venice Boulevard,

[33] The CEI is a measure used by the Federal Transit Administration that compares the capital and operating costs of each alternative with the user benefit. The result is a dollar amount of expenditure per user benefit hour generated by the project.

would be more notable than an aerial structure among higher rise developments, adjacent to an elevated freeway, or in hilly terrain, like in some areas adjacent to the Exposition ROW.

Evaluations were also completed to determine whether through-traffic lanes could be eliminated on Venice and Sepulveda Boulevards to decrease the amount of property acquisition. The evaluations concluded that through lanes could not be eliminated on either Venice or Sepulveda Boulevards based on current traffic volumes.[34] Future traffic volumes would be anticipated to worsen that situation.

The LRT Venice/Sepulveda Alternative would result in the loss of approximately 1,000 parking spaces along Venice and Sepulveda Boulevards. This parking is only about half-utilized during the day, but evening use may be high as the residential users on the side streets park on Venice and Sepulveda Boulevards. In addition, the utilization of side street parking in these areas is high during the daytime hours and potentially higher at night considering the residential uses on the side streets. As a result, few of the lost spaces could be compensated for on the side streets which could require the acquisition of additional private property to compensate for the parking loss.

Three separate capital cost estimates were developed for the LRT Venice/Sepulveda Alternative: one that envisioned a mostly at-grade alignment, a second that envisioned a mostly at-grade alignment but with aerial structures over the Venice/Overland intersection as well as along much of Sepulveda Boulevard, and a third estimate that envisioned aerial structures along much of both Venice and Sepulveda Boulevards. The capital costs were estimated to range from $1,264M to $1,361M (in 2007 dollars). This would be the highest cost alternative both in terms of total cost and cost per mile. The most expensive option would be the LRT Venice/Sepulveda Alternative assuming extensive use of aerial structures to minimize property displacements.

Annual operating costs were estimated to be $33M, which was the second highest operations and maintenance costs of all of the alternatives. The operating cost is less than for the LRT Exposition ROW Alternative due to the smaller LRT vehicle fleet requirements associated with the lower ridership demand.

Based on the conceptual level capital and operating costs, the CEI for the LRT Venice/Sepulveda Alternative was estimated to be $28 to $29, which falls on the high end of the medium-low cost-effectiveness rating.

In summary, the LRT Venice/Sepulveda Alternative provided good transportation user benefit but at a higher cost and potentially higher level of community disruption than the Exposition ROW Alternatives. As measured by the medium-low cost-effectiveness index, this project might not be the most efficient transit investment in the long term. As the environmental document would provide a more detailed evaluation of the full range of community impacts associated with this alternative, it was recommended that this alternative continue to be studied as an alternative to the LRT Exposition ROW option in the environmental document.

[34] Meyer, Mohaddes Associates, Technical Memorandum—Evaluation of Lane Elimination on Venice Boulevard and Sepulveda Boulevard, August 24, 2007.

BRT Exposition ROW

The BRT Exposition ROW Alternative would provide substantially fewer boardings than the LRT Exposition ROW or LRT Venice/Sepulveda Alternatives due to the slower travel time and forced transfer at the Expo Phase 1 terminus. The BRT Exposition ROW Alternative was projected to generate approximately 24,100 average weekday boardings in the Year 2030. Over 5,000 of those boardings would be transfers from the Expo Phase 1 LRT at Culver City. Further, maximum peak hour passenger loads on the BRT would range from 2,000 to 3,000 passengers. Based on the Metro BRT hourly passenger capacities, the peak hour passenger loading would dictate the need for 2.5-minute headways during the peak period and potentially 1.5- to 2-minute headways during the peak hour.

Operationally, 1.5- to 2.5-minute headways would present a significant challenge to north/south cross streets. While a detailed traffic evaluation was not conducted, based on historic precedent, the City of Los Angeles Department of Transportation will only support signal priority to the extent that it does not significantly impact north/south traffic flows. Given the very high existing traffic volumes on the north/south arterials, it is not expected that the City would support the levels of signal priority required to accommodate 1.5- to 2.5-minute headways. As a result, it is expected that with 1.5- to 2.5-minute headways, the BRT vehicles would be delayed at the crossings leading to bunching and significant degradation of service quality. By comparison, LRT would be able to meet these service demands more effectively and efficiently with 5-minute peak headways, given the more than 400 hundred person capacity of a two-car train.

With regard to transit travel times, the BRT Exposition ROW Alternative would be approximately 3 minutes slower than the LRT Exposition ROW Alternative due to the acceleration and crossing characteristics of bus operations. Given the forced transfer at the Expo Phase 1 terminus station, the BRT Exposition ROW Alternative would also result in a lower level of transportation user benefit of 5,400.

The BRT Exposition ROW Alternative was found to have a low level of community disruption in terms of property acquisition and relocation. Only four business unit acquisitions would be required, while there would be no residential impacts.

Similar to the LRT Exposition ROW Alternative, the only measurable on-street parking loss associated with the BRT Exposition ROW Alternative would be along Olympic Boulevard. The 200-space parking loss in this segment would primarily impact Memorial Park, businesses and offices (i.e., daytime uses). Some underutilized parking would potentially be available in close proximity on side streets to offset the loss, but not enough to fully compensate. As such, some parking would be lost or required to be replaced on private property acquired for replacement parking.

One capital cost estimate was developed for the BRT Exposition ROW Alternative, which envisioned an at-grade alignment. The cost estimate of $382M (2007 dollars) was significantly lower than for any of the other alternatives. However, if grade separations were required to mitigate the north/south cross street impacts, the capital cost would increase substantially.

Annual operating costs were estimated to be $30M, which would also be lower than either the LRT Exposition ROW or LRT Venice/Sepulveda Alternatives. This is attributed to lower bus maintenance costs as compared to LRT vehicle maintenance costs, and the lower ridership demand on the BRT. Operating costs, independent of maintenance, would be somewhat higher

for the BRT primarily due to the higher number of operators required for the bus service than the LRT. In addition, there would be less infrastructure maintenance required for BRT systems.

Based on the conceptual level capital and operating costs, the CEI for the BRT Exposition ROW Alternative was estimated to be $19, which falls in the midpoint of the medium rating and is similar to the LRT Exposition ROW Alternative. However, as noted previously with regard to the capital cost, if grade separations were required to mitigate the north/south cross street impacts, the cost effectiveness of this alternative would be substantially reduced.

In summary, although the BRT Exposition ROW Alternative would have significantly lower construction costs, a low level of community disruption for property acquisition and relocation, and low levels of on-street parking elimination, the project would provide service to fewer riders due to the transfer at the Expo Phase 1 terminus and would provide a lower level of transportation user benefit. In addition, the BRT Exposition ROW Alternative would result in significant traffic impacts to north/south cross streets with the very high frequency of service required to meet the demand. If grade separations were required to mitigate the north/south cross street impacts, the cost effectiveness of this alternative would be reduced. Based on the lower ridership, lower user benefit, and operational issues, this alternative was eliminated from any further consideration in the environmental document.

LRT Venice/Venice

The LRT Venice/Venice Alternative was projected to generate 17,200 average weekday boardings in the Year 2030, which was lower than all of the other alternatives. The lower projections were substantially related to fewer current and future jobs, lower population projections, and less proximity to major study area trip generators. This alternative would require a bus transfer to access the Santa Monica terminus and, therefore, has the longest travel time of approximately 50.5 minutes.[35] This alternative would also result in the lowest transportation user benefit of 2,400.

Similar to the LRT Venice/Sepulveda Alternative, the property acquisitions associated with an at-grade alignment along Venice Boulevard would be extensive and would result in substantive community disruption. Ten full multifamily parcel acquisitions, 49 partial multifamily acquisitions, 1 full single-family acquisitions, 3 partial single-family acquisitions, 38 full business parcel acquisitions, and 39 partial business parcel acquisitions would be required.

As with the LRT Venice/Sepulveda Alternative, the possibility of reducing impacts by implementing an aerial structure was also evaluated. An aerial alternative would require one partial single-family acquisition, plus six full business parcel acquisitions.

As noted previously in the case of the LRT Venice/Sepulveda Alternative, although aerial structures would reduce the property impacts to some degree, they would contribute a dominant visual element to the neighborhood/community. The aerial structure on Venice Boulevard for the LRT Venice/Venice Alternative would be 5.5 miles in length affecting more adjacent neighborhoods.

Evaluations were also completed to determine whether through-traffic lanes could be eliminated on Venice Boulevard to decrease the amount of property acquisition. The evaluations concluded

[35] 50.5 minutes would be the LRT and Bus transit time to Santa Monica; the LRT travel time to the Venice Beach terminus would be 43.1 minutes.

that through lanes could not be eliminated based on current traffic volumes.[36] Future traffic volumes would be anticipated to worsen that situation.

The LRT Venice/Sepulveda Alternative would result in the loss of up to 1,100 parking spaces along Venice Boulevard. This parking is only about half-utilized during the day, but evening use may be high as the residential users on the side streets park on Venice Boulevard. In addition, the utilization of side street parking in these areas is high during the daytime hours and potentially higher at night considering the residential uses on the side streets. As a result, few of the lost spaces could be compensated for on the side streets which could require the acquisition of additional private property to compensate for the parking loss.

Two separate capital cost estimates were developed for the LRT Venice/Venice Alternative: one that envisioned a mostly at-grade alignment and a second that envisioned an aerial structure along much of Venice Boulevard. The capital costs were estimated to range from $861M to $1,206M (in 2007 dollars). Although this would be less costly than the LRT Exposition ROW Alternative, the cost per mile, which ranges from $145M to $204M, would be higher.

Annual operating costs were estimated to be $26M, which was the lowest operations and maintenance costs of all of the alternatives. The lower cost is reflective of the smaller LRT vehicle fleet requirements.

Based on the conceptual level capital and operating costs, the CEI for the LRT Venice/Venice Alternative was estimated to be $85 to $111, which is well into the low cost-effectiveness rating.

In summary, the LRT Venice/Venice Alternative performed significantly less well than the other LRT Alternatives. The transit benefit was very limited and the capital costs were high. The cost effectiveness was not at all competitive. In addition, there would be a greater degree of disruption to the community associated with land acquisition/relocation than other alignments, on-street parking elimination would be high for the at-grade option, and there would be other community concerns for the lengthy aerial option. It was recommended that this alternative be eliminated from any further consideration in the environmental document.

Level 2 Screening Conclusions

In conclusion, the Level 2 screening supported the elimination of the BRT Exposition ROW Alternative and the LRT Venice/Venice Alternative from any further analysis.

The LRT Exposition ROW and the LRT Venice/Sepulveda Alternatives were recommended for inclusion in the environmental document to provide for a more detailed and comprehensive evaluation, leading to a more informed decision regarding the Locally Preferred Alternative.

Level 1 and Level 2 screening summaries are depicted in Figure 2.6-1 (Level 1 and Level 2 Screening Summary).

[36] Meyer, Mohaddes Associates, Technical Memorandum—Evaluation of Lane Elimination on Venice Boulevard and Sepulveda Boulevard, August 24, 2007.

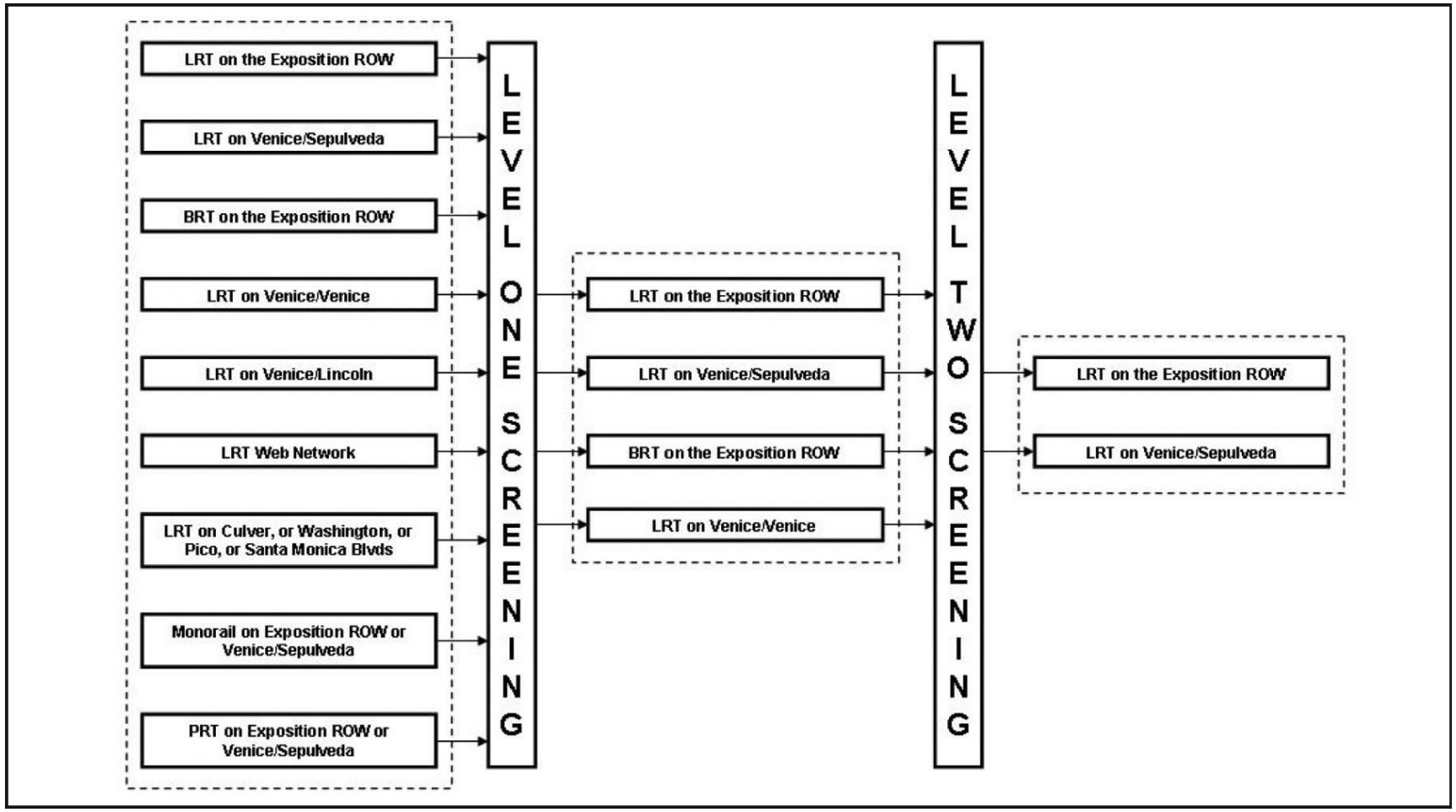

Source: Metro, 2008; DMJM Harris, 2008.

Figure 2.6-1 Level 1 and Level 2 Screening Summary

2.6.2 Design Options Evaluated During Project Development

A number of issues and design options associated with the LRT Alternatives were evaluated during the early stages of project development in an effort to establish a more-fully defined project and set of alternatives that could be carried forward into the environmental document for further detailed analysis. The following issues and design options, briefly described below, are based upon technical evaluations that concluded dismissal of the issue or option for the stated reasons and were not carried forward within the environmental document.

Motor Station Alternative—Segment 1: Expo ROW

The proposed Motor Station in Segment 1 was initially described in the Notice of Intent (2007) and was also presented to the public during the project Scoping process (2007). The proposed station location was east of Motor Avenue and south of the I-10 Freeway within the Exposition ROW. Further evaluation of this station location revealed that it would not be feasible to construct a station at this site due to geometric constraints based upon the *Metro Design Criteria*.[37] The existing box structure under the I-10 Freeway is located immediately west of the proposed station location and the alignment would need to curve to enter the box structure. As such, there would not be a sufficient length of tangent track (i.e., straight section of track) to allow for the construction of a standard 270-foot-long station platform at this location. Because of these geometric constraints, the proposed station was moved further east to just west of the Palms/National intersection within the Exposition ROW.

Day-lighting Stone Canyon Creek or Greenway—Segment 1: Expo ROW

A “Greenway” concept was proposed by the community during the project Scoping process. This concept focused on the area between Overland and Military Avenues and essentially proposed day-lighting the existing storm drain (11 feet wide by 9.5 feet high) which is located beneath Overland Avenue and flows to the south. The system would be “day-lighted” by pumping the stormwater from the existing storm drain to a surface swale on the Exposition ROW. The water would flow in this surface swale from Overland Avenue towards Westwood Boulevard. The swale would allow percolation of stormwater through its surface and recharge the local water table. Water flows in excess of the amount that percolates would flow westward in the swales to a catch basin which would connect to another branch of the same stormwater system. The Overland storm drain currently carries the perennial-flowing Stone Canyon Creek, a tributary to the Ballona Creek, as well as substantial storm drainage collected throughout the West Los Angeles area.

Issues associated with day-lighting a major storm drain were evaluated.[38] The analysis showed the following:

- The area located between Overland Avenue and Westwood Boulevard is within a Federal Emergency Management Flood Zone (FIRM Community Panel Number 060137 0071 C). The area is subject to rising water during a 100-year flood event. Bringing the Stone Canyon Creek to the surface would likely increase the potential for rising waters and increase the area affected by the 100-year flood elevation, such as the adjacent

[37] Exposition LRT Project, *Metro Design Criteria*, Revision 2, January 2007.
[38] Exposition Light-Rail Transit Project Phase 2—Drainage Modifications Study Letter Report, Metcalf & Eddy, January 28, 2008.

single-family homes.

- The Overland storm drain is designed for a 50-year flood, which has extremely high flows of 2,942 cubic foot per second (cfs). The requirement to day-light the 2,942 cfs flow from the existing storm drain structure to the surface, a distance of approximately 15 feet, would require an enormous and costly pump station.[39]
- Once day-lighted, a large swale within the Exposition ROW would be required to clean the water. The space required for this large swale would encroach upon the space required for the proposed light-rail tracks, the Expo/Westwood station platforms, and the station parking. The swale would require substantial length in order to clean the water and this would require continuing the swale under the cross streets, including Westwood Boulevard, Midvale Avenue, Kelton Avenue and beyond. Continuing the swale in this manner would require raising the existing street elevations to provide culverts[40] for the water to flow below the streets, or constructing three new vehicular bridges. The costs of these elements (swale, street reconstruction, etc.) and the neighborhood impact associated with the construction would be substantial.
- In lieu of day-lighting within the Exposition ROW, it was suggested that an inverted siphon could be used to transport the stormwater beneath a trench that could be constructed to allow the LRT to pass under Overland. While the grade crossing analysis did not recommend grade separation of this crossing, this concept was reviewed for technical feasibility and discussed with the City of Los Angeles in response to public comments. Inverted siphons are not typically used for stormwater because debris which is carried in the stormwater can interfere with the effectiveness of the siphon. In addition, the volume of water transported by this drainage system is so large that the city would not utilize an inverted siphon.

For the above reasons, the Greenway concept was determined not to be feasible.

During the next phase of the project, the Expo Authority will work with the appropriate agencies to determine if it is feasible to treat stormwater runoff within the Exposition ROW from the Westwood Boulevard and Overland Avenue area.

Overland Avenue and Westwood Boulevard Grade Separations—Segment 1: Expo ROW

The analysis of environmental, safety, technical engineering, and other considerations established that Overland Avenue and Westwood Boulevard would operate safely at-grade, with impacts mitigated to a less-than-significant level per CEQA. In response to comments on the DEIR, the Expo Authority conducted additional analysis of these crossings in coordination with the LADOT. LADOT concurred that the at-grade crossings at these locations, with the improvements described in FEIR Section 3.2 (Transportation/Traffic), Table 3.2-8 (Grade Crossing Analysis—Proposed Improvements), would be operated safety and would not have other significant impacts. Refer to Section 3.2 (Transportation/Traffic), as well as the

[39] At this early stage of design it would be difficult to accurately estimate the size and cost of the pump station. A project recently completed by Metcalf & Eddy in the Los Angeles area included a 133 cfs pump station with approximately 30 feet of lift at an approximate construction cost of $4.5 million and structure dimensions 42 feet wide by 86 feet long. By comparison, the pump station required in this area of Expo Phase 2 would need to pump nearly 28 times more flow.
[40] A culvert is a conduit used to enclose a flowing body of water.

Transportation/Traffic Technical Background Report for a detailed discussion of the additional analysis.

As part of a multi-faceted evaluation process, including the above mentioned CEQA requirements, the analysis of the Overland Avenue and Westwood Boulevard crossings also involved the application of the Metro Grade Crossing Policy, as adopted by the Metro Board of Directors on December 4, 2003. The policy provides guidance for determining where grade separations should be considered for Metro LRT projects. The same methodology was applied to all other crossings along both Expo Phase 1 and Expo Phase 2. This ensures that all communities along the Expo Line were treated in an equitable and consistent manner and avoids potential cumulative impacts associated with treating one neighborhood different than the other relative to grade crossing decisions.

However, many comments were received from the public on the application of the Metro Grade Crossing Policy and the evaluation of safety issues associated with at-grade crossings, as well as the potential impacts on students and/or school sites relative to noise and vibration; safety, security, and emergency access; aesthetics; and air quality. Concerns were specific to Overland Avenue Elementary School, which is located immediately north of the Expo Phase 2 alignment and east of Overland Avenue. As such, the issues associated with grade separations at Overland Avenue and Westwood Boulevard were examined based on their ability to achieve the project purpose and objectives taking into account technical, environmental, and economic factors. Various grade separated configurations at Overland Avenue and Westwood Boulevard were considered, including both below and above ground options. The grade separation discussion provided herein focuses on grade separating both Overland Avenue and Westwood Boulevard as a continuous structure since it was the main emphasis of the community's comments.

Overland Avenue and Westwood Boulevard—Trench

An underground grade separation would involve a trench extending from east of Overland Avenue and continuing below grade under Overland Avenue and Westwood Boulevard before ascending back to grade west of Westwood Boulevard within the Exposition ROW. The below ground section would be approximately 3,500 feet in length. The station could remain between Westwood Boulevard and Overland Avenue, but a more complex underground station would be constructed. Further, significant ventilation and vertical circulation for patron access would be needed due to the length of the covered section.

As noted previously, a large gravity fed storm drain runs north/south under Overland Avenue across the Exposition ROW, with interior dimensions of 11 feet wide by 9.5 feet high. In addition, a second storm drain runs north/south at Midvale Avenue, with interior dimensions of 8 feet wide by 7.5 feet high. Construction of a shallow LRT trench at this location would require that the existing storm drains be pumped under the LRT trench; a significant pump station would need to be constructed to handle the volume of water. Another option would be the construction of an inverted siphon where water pressure is used to bring water under a structure and then back up to the storm drain. This arrangement is not recommended because of the risk of failure in a storm drain system where debris could clog the siphon. Alternatively, a deeper LRT trench below the existing drainage structures would require that the LRT trackway be placed at about 40 to 45 feet below ground surface.

In addition, as noted previously, this area is in a FEMA Special Flood Hazard Zone AO that is subject to shallow flooding depths and inundation. The construction of a trench would create a large depressed area, which could become flooded in the event of a major storm. As such, the facility and associated systems would need to be flood-proofed. “Flood proofing” means any combination of structural and non-structural additions, changes, or adjustments to structures that reduce or eliminate flood damage to property, facilities, and structures. Given the engineering and environmental challenges associated with the existing storm drains and flood zone, the construction impacts to the adjacent residential neighborhoods and Overland Avenue Elementary School would be substantially greater for a trench than the proposed at-grade guideway.

Based on experience with other transit projects, the approximate 3,500-foot trench and underground station would substantially increase the scope, size and magnitude of construction activities compared to an at-grade configuration, especially considering the challenges that would be incurred with the storm drains and flood zone. The construction of a trench would result in greater noise and vibration impacts due to the type of equipment and construction methods required for excavating and building a trench. Further, more visual or aesthetic impacts would be incurred during construction due the increase in scope and size of the construction footprint and equipment used on site. In addition, the amount of excavated material required for the trench would increase haul loads and routes through the adjacent neighborhoods and near the school. An increase in dust emissions due to the amount of excavated material and construction activity would also impact air quality. Trenching under Overland Avenue and Westwood Boulevard would also require greater traffic detours and lane closures. In addition, the duration of construction would last longer, and larger staging areas would be needed to accommodate excavated material and more equipment. These construction impacts would be contrary to comments received on the DEIR relative to reducing impacts in neighborhoods and near the Overland Avenue Elementary School.

The costs associated with the trench, including an underground station and structural flood-proofing elements would be significantly higher than the proposed at-grade alignment and station. No ridership benefits would be realized with an underground grade separation in this location, as the operating plan and running times would remain the same. Therefore, the trench would not be cost effective in comparison to the at-grade alignment. Plus, it would worsen the cost effectiveness and efficiency of the entire project relative to FTA standards. While federal funding is no longer being pursued for the Expo Phase 2 project, the FTA’s cost effectiveness criteria was used to evaluate and screen alternatives, as discussed previously. Further, a significant increase in overall project costs could jeopardize local funding availability.

Overland Avenue and Westwood Boulevard—Aerial Structure

An aerial structure would extend from east of Overland Avenue and cross over Overland Avenue and Westwood Boulevard before coming back to grade west of Westwood Boulevard within the Exposition ROW. An aerial station would be constructed between Overland Avenue and Westwood Boulevard, involving a larger aerial structure to accommodate the platforms, elevators, and pedestrian access with stairways from street level. This aerial structure would reach approximately 30 feet in height and extend approximately 3,000 feet in length, creating a large physical barrier that would bisect the neighborhood. Given the length and height, the aerial structure would contribute a dominant visual element to the neighborhood/community and Overland Avenue Elementary School. As such, the visual impacts would be significantly greater than the proposed at-grade alignment.

As with the trench, experience on other projects has proven that an aerial structure would result in more extensive construction impacts (e.g., noise, vibration, aesthetics, traffic detours, lane closures, haul loads, and air quality), with a longer construction duration and larger staging areas in comparison to an at-grade alignment. The amount of fill material that would be required to build an aerial structure would increase haul loads and routes through neighborhoods and near the school even more than the trench. Further, the visual impacts during construction would also be greater, as the fill material would be put into place and the station would be constructed above ground. The noise and vibration during construction would also be elevated adjacent to the neighborhoods and school. The aerial structure would also have greater costs and no ridership benefits compared to the at-grade configuration, worsening the cost effectiveness of the overall project based on FTA standards and potentially jeopardizing local funding availability.

Summary of Grade Separation Analysis

In summary, the proposed at-grade alignment at Overland Avenue and Westwood Boulevard could operate safely and minimize impacts to a less-than-significant level, as required by CEQA. As such, a grade separation in these locations would not be needed to mitigate significant impacts, and if anything, would generate other environmental impacts. Construction impacts associated with a grade separation at Overland Avenue and Westwood Boulevard would be more extensive and disruptive to the adjacent community and nearby school. In addition, grade separating Overland Avenue and Westwood Boulevard would substantially increase costs, requiring more local funding and reducing the project's overall cost effectiveness with respect to FTA standards. Further, the at-grade crossings would be consistent with Metro's policy guidance for evaluating grade crossings relative to safety, traffic, and other considerations.

As a result of the community impacts, constructability issues, and cost implications, the Expo Phase 2 project objectives are better accomplished and CEQA significance thresholds are achieved with an at-grade configuration of both Overland Avenue and Westwood Boulevard. Therefore, a trench under Overland Avenue and Westwood Boulevard is not recommended to be retained in the FEIR for further consideration, nor is an aerial structure.

Venice and Sepulveda Boulevards Trench—Segment 1a: Venice/Sepulveda

An aerial structure is proposed at the intersection of Overland Avenue on Venice Boulevard. The alternative of a trench[41] could be possible at this location but would need to be covered in the vicinity of the intersection to accommodate double left-turn lanes (from Venice Boulevard onto Overland Avenue) that would bridge over the trench. This covered section would result in significant ventilation and patron exiting requirements due to the length of the covered section. In addition, the construction impacts (e.g., noise, traffic detours, dust) associated with trench construction would be substantially greater than an aerial structure.

An aerial structure is also proposed at the corner of Venice and Sepulveda Boulevards. A trench could be possible at this location but, similar to Overland, would need to be covered in the vicinity of the intersection and would have significant ventilation and exiting requirements. In addition, the construction impacts would be substantially greater as the trench would have to be constructed under the westbound lanes of Venice Boulevard and the northbound lanes of Sepulveda Boulevard, both heavily used streets. Further, on Sepulveda Boulevard, the existing

[41] Trenches are generally left open on top (i.e., they are uncovered). Tunnels are completely enclosed on all sides apart from the openings at either end.

97-inch Metropolitan Water District (MWD) water line would have to be relocated to allow for the trench. By comparison, construction of the proposed median columns associated with the aerial structure would be less complicated and would result in less construction impacts.

An aerial structure is also proposed along a large portion of the LRT alignment along Sepulveda Boulevard. Given the width of Sepulveda Boulevard and the required lanes for through and turning traffic, an open trench would not be feasible. As such, a covered trench would be required, which would have significant ventilation and patron exiting requirements as well as significant construction impacts. Further, the existing 97-inch MWD water line would have to be relocated between Venice Boulevard and the I-10 Freeway to allow for the trench. By comparison, construction of an aerial structure is less complicated and would result in less construction impacts.

Overland Station—Segment 1a: Venice/Sepulveda

A station at Overland Avenue was identified[42] as a suitable location for a station on Venice Boulevard due to the good interface with the existing bus service on Venice Boulevard, the north/south destinations along Overland Avenue, and the adjacent commercial and residential areas. The grade crossing analysis concluded that Overland Avenue would require grade separation of the light-rail guideway, meaning that Overland Station would be an aerial station. Locating a station directly at Overland Avenue would require a larger aerial structure than if there were no station in order to accommodate the platforms, elevators, and pedestrian access with stairways from street level.

As a result, an alternate at-grade station at Motor Avenue was evaluated and determined to be feasible. Motor Avenue has similar benefits to Overland Avenue: access to Venice Boulevard, bus service, north/south destinations, and adjacent commercial and residential areas. In addition, the at-grade station configuration would allow for a less extensive aerial structure at Overland Avenue. For these reasons the Overland/Venice location was not retained for evaluation in the DEIR.

Sawtelle Station West of I-405—Segment 2: Sepulveda to Cloverfield

The 2001 DEIS/DEIR for this study area considered locating an aerial station between Sawtelle and Pico Boulevards to provide access from both of these busy arterials. The~~is~~ DEIR reviewed the same location for a potential aerial station but was not able to develop a station design that met the *Metro Design Criteria*. This discrepancy was based upon the lack of sufficient horizontal structure length for an aerial station. An alternative station location in closer proximity to the intersection of Exposition and Sepulveda Boulevards was examined and determined to be a feasible design alternative that would meet the *Metro Design Criteria*. In addition, this station location would provide good access to the major north/south corridor of Sepulveda Boulevard, and would allow for easier circulation in and around the station via the less utilized Exposition Boulevard. For these reasons, the previously proposed station between Sawtelle and Pico Boulevards was not pursued in this project.

[42] The Overland Station location was identified in the Draft EIS/EIR for the Mid-City/Westside Transit Corridor, dated April 6, 2001.

Sawtelle and Pico Boulevards Trench—Segment 2: Sepulveda to Cloverfield

The grade crossing analysis concluded that the light rail should be separated from Pico Boulevard; this separation could be over or under the vehicular street. The feasibility of putting the light rail under Sawtelle and Pico Boulevards within a trench was evaluated. From just west of Sepulveda Boulevard, the trench would descend at a 3.9-percent grade and go under the I-405 Freeway, Sawtelle Boulevard, and Pico Boulevard before ascending back to grade east of Barrington Avenue.

This alternative would require vehicular bridges at Sawtelle and Pico Boulevards over the trench. In addition, this alternative would also require locating the Expo/Sepulveda Station east of Sepulveda Boulevard, with associated station parking and circulation issues in closer proximity to a residential neighborhood.

This alternative does not present technical flaws at this level of design; however, construction would be more complex due to the existing utilities and particularly under the I-405 Freeway where the freeway columns may require modifications due to the additional loading of the trench. Furthermore, locating the Expo/Sepulveda Station east of Sepulveda Boulevard would be less desirable as the Expo/Westwood Station is only 2,500 feet from Sepulveda Boulevard and thus already serving this area. For these reasons, the trench concept was dropped from further consideration and the aerial structure concept was carried forward in the design.

Bundy Drive Trench—Segment 2: Sepulveda to Cloverfield

The grade crossing analysis concluded that the light rail should be separated from Bundy Drive; this separation could be over or under the vehicular streets. This study investigated a light-rail trench option under Bundy Drive. From just west of Barrington Avenue, the trench would descend at a 4.6-percent grade under Bundy Drive before ascending back to grade east of Centinela Avenue.

This alternative would require a vehicular bridge structure to allow Bundy Drive to pass over the trench. Further, an existing 48-inch reinforced concrete storm drain pipe under Bundy Drive would need to be relocated or modified to accommodate the trench profile and a pump station for the stormwater may be required as flow by gravity would be interrupted by the trench. In addition, the Expo/Bundy Station would be located within the trench which would further complicate the engineering challenges associated with this alternative. For these reasons, the trench alignment option was withdrawn from further consideration.

Cloverfield Boulevard Trench—Olympic Boulevard Alignment—Segment 2: Sepulveda to Cloverfield and Segment 3: Olympic

The grade crossing analysis concluded that the light rail should be separated from Cloverfield Boulevard; this separation could be over or under the vehicular streets. This study investigated a light-rail trench option under Cloverfield Boulevard. The trench would extend from approximately 300 feet east of 26th Street and descend at a 4.9-percent grade under Cloverfield Boulevard before ascending back to grade east of 20th Street on Olympic Boulevard.

This alternative would require vehicular bridge structures to allow Cloverfield Boulevard and the eastbound lanes on Olympic Boulevard to pass over the trench structure. Due to vertical clearance requirements under the eastbound lanes of Olympic Boulevard, the trench structure would need to extend under 20th Street and would be longer than a comparable aerial structure.

Additionally, the proposed Olympic/26th Street Station would need to be located approximately 400 feet east of 26th Street which would be further from the activity centers near Cloverfield Boulevard. The station and trench structure would also result in a greater impact to the Bergamot Station properties and buildings. Further, an existing 48-inch reinforced concrete pipe under Cloverfield Boulevard would need to be relocated to accommodate this alignment, which may not be feasible or desirable from a maintenance perspective.

Given the additional length associated with the trench structure, plus the additional real estate and utility impacts, the alternative was not retained for evaluation in the DEIR.

Cloverfield Boulevard Trench—Colorado Avenue Alignment—Segment 2: Sepulveda to Cloverfield and Segment 3a: Colorado

The grade crossing analysis concluded that the light rail should be separated from Cloverfield Boulevard; this separation could be over or under the vehicular streets. This study investigated a light-rail trench option under Cloverfield Boulevard. The trench would extend from approximately 300 feet east of 26th Street and descend at a 4.7-percent grade under Cloverfield Boulevard before ascending back to grade east of 20th Street on the Exposition ROW.

This alternative would require vehicular bridge structures to allow Cloverfield Boulevard and Olympic Boulevard to pass over the trench structure. Additionally, similar to the Olympic Boulevard Alignment, the at-grade Olympic/26th Street Station would need to be located 400 feet east of 26th Street, which would be further from the activity centers near Cloverfield Boulevard. The station and trench structure would also result in a greater impact to the Bergamot Station properties and buildings. Further, as with the Olympic Boulevard Alignment, an existing 48-inch reinforced concrete pipe under Cloverfield Boulevard would need to be relocated to accommodate this alignment, which may not be feasible or desirable from a maintenance perspective.

For the reasons noted above, this alternative was not retained for evaluation in the DEIR.

I-10 Santa Monica Freeway Option—Segment 3: Olympic

This study investigated an alignment utilizing the Caltrans ROW north of the I-10 Freeway extending from west of Cloverfield Boulevard until the Santa Monica terminus station as an alternative to the Olympic Boulevard alignment.[43]

This alternative, referred to as the freeway option, would start just west of the intersection of Olympic Boulevard and the Exposition ROW within Segment 3. At this point, the alignment would exit the Exposition ROW to the south and would run on the south/east side of Olympic Boulevard until it crosses 20th Street at grade. This portion of the alignment would either require the elimination of the Olympic Boulevard median, the acquisition of property adjacent to Olympic Boulevard, or possibly both. The alignment would run within the current eastbound traffic lanes

[43] As noted previously in the description of Segment 3, the Olympic Boulevard alignment would begin with an aerial structure over Cloverfield Boulevard which would enter the median of Olympic Boulevard at approximately 21st Street. The alignment would continue at grade within the median of Olympic Boulevard until approximately Euclid Street. The alignment would then transition to an aerial structure and continue either above Olympic Boulevard or adjacent to properties on the south side, or adjacent to or above the embankment of the I-10 Freeway, before turning north and terminating at the intersection of Colorado Avenue and 4th Street.

of Olympic Boulevard while the east and westbound vehicular traffic would utilize the existing median and the existing westbound lanes.

After crossing 20th Street, the alignment would veer southwest towards the I-10 Freeway into a trench and run parallel to and within the existing slope on the north side of the freeway, next to the 20th Street on-ramp. It would then go under the 17th Street, 14th Street, and 11th Street overcrossings of the I-10 Freeway. The existing off-ramp to Lincoln Boulevard would have to be modified to go under 11th Street and over the light-rail alignment. The alignment would continue along the existing slope, pass under Lincoln Boulevard, the on-ramp from Lincoln Boulevard, and past 5th Street until turning north just east of 4th Street at the terminus station. Significant modification would be required to the on-ramp from Lincoln Boulevard or the off-ramp to 4th/5th Street and it may not be possible to maintain the ramp connection to 5th Street. As a variation to the freeway option, the light rail could be located within the median of Olympic Boulevard until 12th Street and transition to the slope on the north side of the freeway between 12th and 10th Streets, thus eliminating some portion of the trench. West of 10th Street, the alignment would continue to the terminus station as described above.

The benefit of the freeway option would be the elimination of the aerial structure proposed for the Olympic Boulevard alignment, which would start at 11th Street and continue until the station terminus at Colorado/4th Street, thus avoiding the introduction of a new visual element. However, per the project criteria, this new visual element is not considered an impact as it would be adjacent to a freeway in a mostly industrial area with uses such as the Santa Monica Big Blue Bus maintenance and layover facility. Also, the construction of the freeway option would likely cause significant disruption to freeway traffic since four bridges over the freeway would likely require full reconstruction to create sufficient horizontal and vertical clearances for the light-rail guideway. Further, the City of Santa Monica considers the 4th and 5th Street off-ramps to be vital access points to the activity centers in the area. Closing or disrupting these ramps would negatively impact the local traffic circulation and access. In summary, the substantial negative impacts of this freeway option were considered greater than those associated with the Olympic Boulevard Alternative and it was, therefore, withdrawn from further consideration.

Olympic Boulevard—14th Street Station vs. 17th Street Station—Segment 3: Olympic

This study investigated potential station locations at 14th and 17th Streets along the Olympic Boulevard alignment. Both locations would provide benefits, including facilitating access to Memorial Park and the existing Santa Monica College shuttle. These stations would also serve a large number of businesses located along Olympic Boulevard and on adjacent blocks, as well as residential areas to the south of the I-10 Freeway that are accessible via the freeway overcrossings at 14th Street or 17th Street.

The 14th Street Station would be more evenly spaced between the adjacent stations at Colorado/4th Street Station and the Olympic/26th Street Station, and would be closer to Memorial Park than 17th Street. However, 17th Street would have access to the existing bike facility along 17th Street and would be closer to Crossroads School and the Santa Monica Unified School District office, thus allowing faculty, students, and employees easy access to transit.

The light-rail alignment is proposed to ascend between 14th and 11th Streets to allow for an aerial alignment over 11th Street.[44] The need to ascend immediately west of 14th Street would preclude a standard split-platform station configuration at 14th Street. Other standard station configurations (i.e., side platform or center platform) would create real estate impacts to either Memorial Park on the northeast corner, or the business on the southeast corner, or both. By comparison, a standard split-platform station configuration could be employed at 17th Street within the existing public right-of-way by utilizing the area opposite the left-turn pockets on Olympic Boulevard at 17th Street.

Another option, which would not be standard, would be to locate the westbound station platform just east of 14th Street and the eastbound station platform just west of 17th Street. This configuration could also be constructed within the existing public right-of-way but would create a complicated passenger interface.

In summary, both locations provide similar benefits in terms of facilitating access to businesses and residences, but 17th Street would allow for a standard station configuration without requiring real estate impacts. For this reason, the 14th Street Station alternative was not retained for evaluation in the DEIR.

Colorado Avenue—14th Street Station vs. 17th Street Station—Segment 3a: Colorado

This study investigated potential station locations at 14th and 17th Streets along Colorado Avenue. A 14th Street Station could be located east of 14th Street within the center of Colorado Avenue, while a station at 17th Street could be located within the center of Colorado Avenue just west of 17th Street.

Both locations would provide benefits, including facilitating access to Memorial Park and the existing Santa Monica College shuttle. These stations would also serve a large number of businesses located along Colorado Avenue and adjacent blocks, as well as residential areas to the north of Colorado Avenue. The 17th Street station location would also provide access to the existing bike facility along 17th Street.

For either station alternative, the eastbound traffic lanes on Colorado Avenue would be reconfigured as they approach 17th Street. The lanes would bow southward to increase the angle between the eastbound traffic lanes and the LRT crossing as it transitions from the Exposition ROW onto Colorado Avenue. This would provide greater visibility at the intersection and greater clearance between the trains and the traffic lanes. This reconfiguration would result in real estate acquisitions on the south side of Colorado Avenue between 14th and 17th Streets but would also allow for the placement of a center-platform station within the center of Colorado Avenue west of 17th Street. In the case of the 14th Street station location, however, additional real estate acquisitions would be required to the west of 14th Street. These additional acquisitions would be necessary to reconfigure the traffic lanes to accommodate the station and guideway within the center of Colorado Avenue.

In summary, both locations provide similar benefits in terms of facilitating access to businesses and residences, but the 14th Street location would result in additional property acquisitions. For this reason, the 14th Street Station alternative was not retained for evaluation in the DEIR.

[44] Refer to Section 2.4.4 (Segment 3 [Olympic]—Olympic Boulevard from Exposition ROW to Santa Monica Terminus [LRT Alternatives 1 and 3]) for further description of the Olympic Boulevard alignment.

Colorado Avenue—16th Street Station—Segment 3a: Colorado

This study investigated a station at 16th Street on the Colorado Avenue alignment with the objective of possibly reducing project-related impacts, such as property acquisition. The station could be located on the south side of Colorado Avenue between 16th and 17th Streets on a privately-owned property that spans between these streets. This alternative would require that 16th Street be reconfigured to be a cul de sac in order to facilitate safe braking distance between the platform and the street crossing. A mid-block crossing at 17th Street just south of Colorado Avenue would also be required. In addition, eastbound traffic on Colorado Avenue would need to cross both light-rail tracks to the west of 16th Street. This would not be ideal as the train operator's visibility of approaching vehicles would be restricted by the angle of approach to the crossing. In addition, operation of the 14th Street signal would need to be synchronized with the light-rail crossing of the eastbound vehicular lanes of Colorado Avenue. While pedestrian access would be minimally improved as compared to the proposed station within the center of Colorado Avenue at 17th Street, real estate acquisition would still be required both east and west of 17th Street in order to accommodate the guideway.

A variation of this location would be on the south side of Colorado Avenue between 14th and 16th Streets on property owned by the City of Santa Monica, north of Memorial Park. This location would allow immediate access to Memorial Park and, given that the property is City-owned, would eliminate the need to acquire private property. Similar to the location between 16th and 17th Streets, this alternative would require the closure of 16th Street south of the light-rail alignment, would require a mid-block crossing at 17th Street just south of Colorado Avenue, and would also require that eastbound traffic on Colorado Avenue cross both light-rail tracks mid-block between 14th and 16th Streets resulting in visibility and signal synchronization concerns similar to those noted above.

In summary, although pedestrian access to the 16th Street station locations on the south side of Colorado Avenue would be somewhat better than access to the proposed station within the center of Colorado Avenue at 17th Street, the benefits would not outweigh the traffic and signalization concerns, while the magnitude of the real estate impacts would not be substantially different. For these reasons, the 16th Street Station alternatives were not retained for evaluation in the DEIR.

Colorado Avenue—Colorado/2nd Street Station—Segment 3a: Colorado

An optional terminus arrangement with an on-street station between 2nd Street and 4th Street was examined at the request of the City of Santa Monica. The proposed station would be at grade and would have a 270-foot-long, 23-foot-wide center platform stretching between just west of 4th Street to just east of 2nd Street. Approximately 225 surface parking spaces would be located on the commercial block bounded by 4th Street, 5th Street, and Colorado Avenue, and vehicular access would be from 5th Street. This block would also serve as the location of a train storage track.

This on-street station would require the closing of Main Street at Colorado Boulevard as the at-grade station platform would span the intersection. Additionally, the eastbound side of Colorado Boulevard would be permanently closed to traffic between 4th Street and 2nd Street due to the narrow public right-of-way. The proximity of the Sears retail building to the street precludes the practical possibility of expanding the right-of-way. Additionally, the difficult rail geometry of this station would create a slow and potentially unreliable transit operating environment with 5 mph

speed restrictions for the LRT. For this reason, the Colorado/2nd Street station was not retained for evaluation in the~~is~~ DEIR.

Station Parking—All LRT Alternatives

Station parking was considered in the context of the demand for transit parking versus the project-related impacts associated with providing parking in an already built-out environment. The Metro Travel Demand Model, which was used to estimate project ridership, also provided an estimate of the number of people who would access the system by auto, drop-off, bus, and walk modes. The 2030 parking demand for stations located along LRT 1 and LRT 2 was estimated to be approximately 1,191 spaces, while parking demand at stations along LRT 3 and LRT 4 was estimated to be 1,096 spaces.

Due to the high cost of property within the study area, the average cost per parking space is between $73,000 and $105,000 (in 2008 dollars).[45] Given this excessive cost, it was therefore assumed that parking would only be provided on public rights-of-way or on property that would be acquired for project-related features, such as stations or guideway.

Based on the above criteria, approximately 900 spaces are proposed to be incorporated into LRT 1 and LRT 2, and 990 are proposed to be incorporated into the LRT 3 and LRT 4. For those areas where parking demand was not fully realized, the Expo Authority and Metro would work with the local communities and cities to limit spillover parking within the adjacent neighborhoods.

Maintenance Facilities

In order the meet the maintenance requirements of the light-rail vehicles, a suitably located site of approximately 6 to 10 acres was determined to be necessary. Using aerial mapping, site visits, and other sources, a detailed evaluation of potential sites was undertaken. The basic desirable site characteristics included the following:

- Adjacency to the LRT Alternatives
- A regular shape conducive to storage and maintenance track layout and activities
- Location in a commercial/industrial area
- Relatively flat topography
- Good vehicular access
- Limited environmental impact potential

Approximately ~~thirteen~~ twenty sites, ranging in size from 3 to 18 acres, were identified as potential candidate sites within the bounds of the study area based upon the six desirable site characteristics above. The sites included[46]:

~~Of these, six were screened out as being too small to meet the project requirements. Each of these six sites was below 6 acres in size and could not be reasonably combined with adjoining parcels to meet the minimum size requirement.~~

[45] Estimate includes property and surface or structure costs.
[46] Refer to *Maintenance Facility Location Technical Background Report* for further information.

~~Of the remaining seven parcels, the following was concluded for each site:~~

- ~~A site in Los Angeles, adjacent to Venice Boulevard and Durango Avenue, was deemed too irregularly shaped and not reasonably accessible to the light-rail system. In addition, the current usage as a shopping center with multiple tenants would have made relocation difficult and expensive.~~
- ~~A site in Los Angeles, just west of the I-405 Freeway and north of Pico Boulevard, was determined to have multiple owners and leaseholders as well as being located in a manner that would not allow for reasonable connection to the light-rail tracks.~~
- ~~A portion of a site in Los Angeles, also just west of the I-405 Freeway and north of Pico Boulevard, entered into the construction phase for residential housing during Expo Phase 2 project development and was, therefore, no longer a reasonable option.~~
- ~~A site in Los Angeles, east of Centinela, was deemed to have a configuration that was less than ideal. In addition, the site had multiple owners which would result in a complicated and potentially costly acquisitions process.~~
- ~~Two locations in Santa Monica, south of Olympic Boulevard; the first between 14th and 17th Streets and the second between 17th and 20th Streets were examined. Both sites were less than 4 acres in size and could not be expanded without significant challenges due to the I-10 Freeway to the south, Olympic Boulevard to the north, and major north/south streets constraining eastward or westward expansion. Thus, both sites were rejected as being insufficient in size to satisfy the criteria.~~
- ~~A site in Santa Monica, east of Stewart Street and south of the light-rail system, was determined to be the best site with respect to the desirable site characteristics listed above. Therefore, this is the site proposed and studied within the DEIR.~~

- **E201**—9th Street, Colorado Avenue, 11th Street, Olympic Boulevard
- **E202**—11th Street, Colorado Avenue, 14th Street, Olympic Boulevard
- **E203**—Olympic Boulevard, 14th Street, 17th Street, I-10
- **E204**—Olympic Boulevard, 17th Street, 20th Street, I-10 WB Shoulder
- **E205**—Olympic Boulevard, 17th Street, 20th Street, I-10 EB Shoulder
- **E206**—Cloverfield Boulevard, Michigan Avenue, 21st Street, Olympic Boulevard
- **E207**—26th Street, Cloverfield Boulevard, Olympic Boulevard
- **E208**—Stewart Street, Exposition ROW, 26th Street
- **E209**—Stewart Street, Michigan Avenue, 24th Street, Delaware Avenue
- **E210**—Exposition Boulevard, Exposition ROW (east of Stewart Street)
- **E211**—Nebraska Avenue, Centinela Avenue (north of Olympic Boulevard)
- **E212**—Exposition Boulevard, Exposition ROW (west of Centinela Avenue)
- **E213**—Exposition Boulevard, Centinela Avenue
- **E214**—Exposition ROW, Barrington Avenue, Olympic Boulevard, Colby Avenue
- **E215**—Exposition ROW, Purdue Avenue, Tennessee Avenue, Federal Avenue

- **E216**—Sawtelle Boulevard, Pico Boulevard, Exposition ROW
- **E217**—Exposition ROW, Sepulveda Boulevard, Pico Boulevard
- **E218**—Sepulveda Boulevard, Exposition ROW, Military Avenue
- **E219**—Exposition ROW, National Boulevard
- **E220**—Venice Boulevard, Durango Avenue

Several sites were screened initially as being either too small to meet the facility site size requirement (6 to 10 acres) or too irregularly shaped to accommodate the facilities program requirements. The sites determined to be too small included sites E203, E204, E207 (also irregular shape), E212, E216, E217 (also irregular shape), and E219. Sites determined to be too irregularly shaped included sites E206, E213, E218, and E220. All of these sites were eliminated from further consideration as the Expo Phase 2 maintenance facility site.

The remaining alternative sites were screened and eliminated from further consideration for the reasons indicated below:

- **E201**—Would displace multiple businesses causing potential economic impacts if these businesses relocate to other communities; connection onto Olympic Boulevard or Colorado Avenue would create challenges, including operational issues and traffic impacts
- **E202**—Would displace multiple businesses causing potential economic impacts if these businesses relocate to other communities; may require partial acquisition of adjacent Memorial Park
- **E205**—Would displace multiple businesses causing potential economic impacts if these businesses relocate to other communities; decking I-10 shoulder could create impacts; adjacent to Olympic/17th Street Station; access challenges due to Cloverfield Boulevard aerial LRT
- **E208**—Would displace artist community at Bergamot Station and long-term lease of adjacent city property; adjacent to Olympic/26th Street Station which may be better suited to transit-oriented development (TOD)
- **E209**—Difficult access due to distance from Exposition ROW (400 to 500 feet); access blocked by buildings; significant hazardous materials impacts and clean-up cost due to land fill uses; adjacent to Stewart Park
- **E211**—Difficult access to site due to distance from Exposition ROW; abutting single family residences; relocating power substation would be costly and could have secondary land use and aesthetic impacts
- **E214**—Would displace multiple businesses causing potential economic impacts if these businesses relocate to other communities; access challenges due to Pico Boulevard/Gateway Boulevard aerial LRT tracks, near a school and childhood center
- **E215**—Would displace multiple businesses and residences causing potential economic impacts if these businesses and residents relocate to other communities; site of new residential construction; access challenges due to Pico Boulevard/Gateway Boulevard aerial LRT tracks

Based on this screening, site E210 (the Verizon property) was considered to be the most suitable site for inclusion and analysis in the DEIR.

Subsequent to completion of the DEIR, the City of Santa Monica and the neighboring community expressed concern about locating the Maintenance Facility adjacent to a residential area and requested that the Expo Authority examine alternative locations. In response, the Expo Authority worked with the City of Santa Monica, Metro, and the community to identify alternative sites and layouts for the Maintenance Facility.

As part of this process, the City of Santa Monica hired real estate and design consultants to evaluate options for the Maintenance Facility. Several sites were analyzed and reports were provided to the Santa Monica City Council in August and October 2009. Based on these efforts, the City of Santa Monica's consultants concluded that no other suitable Maintenance Facility sites were available or feasible.

In coordination with the City of Santa Monica and Metro, several alternatives to the proposed Verizon site (E210) were also explored, including a "split" alternative using the Verizon site, the adjacent Santa Monica College parking lot, and an adjacent site at 1800 Stewart Street (eastern portion of Site E208 on the west side of Stewart Street). This alternative would have required that the facility span Stewart Street and involved significant costs associated with acquiring the site at 1800 Stewart Street. In addition, this alternative did not have the support of the adjacent neighbors and generated new opposition. For these reasons, the "split" alternative was not pursued further.

In addition, a "hybrid" alternative utilizing the Verizon site, the Santa Monica College parking lot, and a portion of the City of Santa Monica yards site (E209) on the west side of Stewart Street for a joint parking structure was also considered. This alternative was eliminated when it was established that the Maintenance Facility parking requirements could be accommodated on the Verizon and Santa Monica College parking lot without the need for the City of Santa Monica yards site.

At the request of the Santa Monica City Council, Site E201, between 9th and 11th Streets in Santa Monica was also reexamined. The Expo Authority concluded that this site would not be a recommended alternative for the Maintenance Facility because of safety, economic dislocation, and cost concerns. Access to the site would require that the LRT make a turn into eastbound traffic, raising safety concerns. In addition, the site is home to twenty-seven businesses, including auto service, manufacturing, media, and wholesale businesses. Dislocation costs were estimated to range from $152 million to $203 million.

In addition to the above and in coordination with the City of Santa Monica and Metro, the Expo Authority explored additional alternatives limited to the Verizon site and the existing Santa Monica College parking lot on the east side of Stewart Street. Multiple layouts were explored in an attempt to satisfy Metro's operating needs and address the comments on the original DEIR concept. As described previously in Section 2.4.6 (Other Related Facilities), these collaborative efforts resulted in a Maintenance Facility Buffer Design Option that was evaluated in the FEIR.

In addition to the above sites, approximately 30 additional sites were identified within the bounds of the Expo Phase 1 study area and in the vicinity of Downtown Los Angeles as part of previous studies on Expo Phase 1. None of these sites were recommended for further consideration in the Expo Phase 2 EIR.

2.7 Related Studies and Projects

This section presents transit, roadway, and land use projects within the corridor that may impact the configuration, layout, and/or costs of the alternatives for the Expo Phase 2 project. These recently proposed or planned projects were evaluated for potential cumulative effects in Chapter 5 (Other CEQA Considerations) and are based on the SCAG Regional Comprehensive Plan (April 2001), Regional Transportation Plan (2008); and Metro Long Range Transportation Plan (2009). Information was also obtained from the City of Los Angeles Planning Department and City of Santa Monica Planning Department.

The related studies and projects in the Expo Phase 2 corridor include:

- Wilshire Boulevard Corridor Improvements—Wilshire Boulevard Corridor Improvements—Selby Avenue to Comstock Avenue—Widen Wilshire Boulevard intersections in Westwood (neighborhood) at key signalized intersections and install raised landscape median
- Sawtelle Boulevard Widening at Venice Boulevard—Sawtelle Boulevard widening at Venice Boulevard—Widen west side of Sawtelle Boulevard, restripe to provide a north-bound left-turn lane from (northbound) Sawtelle Boulevard to west-bound Venice Boulevard
- 20th & Cloverfield Streetscape, Pedestrian and Traffic Improvements—Includes street resurfacing, new curbs, sidewalks, landscaping, crosswalks, bus stop improvements, etc.
- Widen Bundy Drive—Between Wilshire and Santa Monica Boulevard—Widen from two lanes to four lanes
- Mid-City Transit Corridor: Wilshire Boulevard from Vermont Avenue to Santa Monica Downtown—Mid-City Transit Corridor: Wilshire Boulevard from Vermont Avenue to Santa Monica Downtown—Mid-City Wilshire BRT including division expansion
- Westside Extension—Westside Extension—Purple Line from Wilshire/Western to La Cienega
- Sepulveda Boulevard—Widen Sepulveda Boulevard between Olympic Boulevard and Pico Boulevard to “Major Highway” Standard
- Sepulveda Boulevard—Sepulveda Boulevard from Pico Boulevard to National Boulevard—Widen to “Major Highway” Standard and increase number of through lanes from two to three lanes (right-of-way required)
- Sepulveda Boulevard—Sepulveda Boulevard from National Boulevard to Venice Boulevard—Widen to “Major Highway” Standard and increase number of through lanes from two to three lanes (right-of-way required)
- Green Line—Extend Green Line from LAX to City of Santa Monica
- Overland Bridge Widening—Between National Boulevard/Westbound I-10 Ramps to National Boulevard/National Place—Widen Overland Avenue Bridge over the I-10 Freeway
- Crenshaw Boulevard Corridor—Capital Costs
- Wilshire Boulevard Bus Rapid Transitway Construction—Capital Costs

- Metro Subway Westside Extension from La Cienega to City of Santa Monica—Strategic Plan/Unfunded
- 10329 W Palms Boulevard—Density bonus mixed-use development project with 49 units and 9,357 square feet (sf) retail in the C2-1 Zone
- 11320 W Exposition Boulevard—22-unit new residential condo
- 10001 W Venice Boulevard—115-unit new residential condo; Total Project Area: 54,319 sf
- 1901, 1925, 1933 S. Bundy/12333 W. Olympic Boulevard—Proposed mixed use project
- 11122 W. Pico Boulevard (Casden)—Proposing 265,000 sf retail and 500 residential rentals, no applications at this time
- Bicycle Facility in City of Los Angeles—From Expo Phase 1 Venice/Robertson Station to Santa Monica City Limits
- 2930 Colorado Avenue—115,000 sf commercial; 280 units of "workforce" (i.e., small units that are more affordable) and affordable (109 affordable)
- 3025 Olympic Boulevard—80,000 sf creative office; 85 units of "workforce"
- Bicycle Facility in City of Santa Monica—From east Santa Monica City limit to 4th Street and Colorado