077/6122

CORROSION CONTROL FINAL REPORT

FOR

PRELIMINARY ENGINEERING

OF THE

SOUTHERN CALIFORNIA RAPID TRANSIT DISTRICT

METRO RAIL PROJECT

WBS-12AAH, TASK 9

SUBMITTED BY

PROFESSIONAL SERVICES GROUP, INC.

WATERS CONSULTANTS DIVISION

7807 CONVOY COURT, SUITE 110

SAN DIEGO, CALIFORNIA 92111

TELEPHONE: (619) 565-6580

JUNE 30, 1983

Ray Shaffer, P.E.
Vice President

Donald M. Waters, P.E.
Vice President

Eugene DeCarlo, P.E.
James Jameison
John McElwee
Norman Moriber, P.E.

Peter Pignatelli, P.E.
Robert Smith, P.E.
Blaine Stauffer, P.E.
Walter Young, P.E.

VOLUME 1

MTA LIBRARY

TABLE OF CONTENTS

DESCRIPTION	PAGE NO.
SUMMARY	i
RECOMMENDATIONS	1
GENERAL	1
STRAY CURRENT CORROSION CONTROL	1
CORROSION CONTROL FOR BURIED STRUCTURES	8
ATMOSPHERIC CORROSION CONTROL	14
INPUT DATA FOR COST ESTIMATES	22
TASK 1 - MANAGEMENT INFORMATION AND REPORTING	1-1
TASK 2 - CODES, REGULATIONS AND INDUSTRY PRACTICES	2-1
TASK 3 - COORDINATION	3-1
TASK 4 - SOIL CORROSION STUDY	4-1
TASK 5 - STRAY CURRENT ANALYSIS AND CONSIDERATION OF VARIOUS ALTERNATIVES	5-1
TASK 6 - ATMOSPHERIC CORROSION	6-1
TASK 7 - STRAY CURRENT CONTROL RECOMMENDATIONS	7-1
TASK 8 - CORROSION CONTROL DESIGN CRITERIA AND SPECIFICATIONS	8-1

MTA LIBRARY

SUMMARY

Waters Consultants has investigated and studied matters pertaining to corrosion control for the Metro Rail Project. The results of this study have been set forth in six interim reports submitted to the Southern California Rapid Transit District. These interim reports have been updated and consolidated into this final corrosion control report for the preliminary engineering phase of the Metro Rail Project.

The purpose of this corrosion control study is to identify facilities and operations of the Metro Rail Project would be subject to or a possible source of stray current and corrosion, and to recommend measures to mitigate these corrosion problems. The three general categories of corrosion investigated include atmospheric corrosion, corrosion by soils and stray current corrosion. The recommendations set forth in this report impact almost all areas of engineering design and must be incorporated into the final design of the Project.

Since incorporation of corrosion control measures usually add to the initial cost of a project, the importance of these measures and the consequences of not considering corrosion control in design must be emphasized. Direct current discharging to earth from a buried steel structure will result in the loss of metal to corrosion at a rate of twenty pounds per ampere each year. Since the operation of a DC powered rail system involves thousands of amperes of current, leakage to earth of only a small fraction of the total could result in catastrophic damage to metallic components of the Project and adjacent structures. Included in these would be tunnel reinforcing, tunnel liners, pipelines, conduits, embedded rails, rail fasteners and paralleling and crossing utilities.

In addition to corrosion caused by operation of a DC transit system, the Project will be subjected to corrosion and degradation from soil, ground water and the atmosphere. Atmospheric corrosion resulting from improperly selected or coated materials would result in damage to the appearance and eventual mechanical failure of exposed metallic structures. Corrosion of buried metallic structures and degradation of buried concrete surfaces could result in serious damage to tunnels, pipelines and conduits.

The cost of repairing or replacing components or structures subsequent to construction would generally be very high. In addition to repair or replacement costs, the costs associated with disruption in service and liability claims must also be considered. In light of the high cost of designing without regard to corrosion control, it is wise to invest the funds necessary to design corrosion control measures into the Project.

This corrosion control study consisted of several tasks. One of these, Task 2, consisted of identifying codes, regulations and existing conditions. This included identifying and recording all special regulations, codes and industry practices which are applicable to cathodic protection of the Project and neighboring installations. Also included is reviewing and compiling appropriate data from utilities and

MTA LIBRARY

other owners of underground facilities to document pertinent data on existing local conditions.

Another part of the study, Task 4, involved soil corrosion. The soil corrosion conditions relating to metallic facilities range from mildly corrosive to very corrosive. The soil and ground water are also aggressive to concrete. Corrosion control measures recommended include proper selection of materials, coatings and cathodic protection.

An analysis of stray currents was conducted as Task 5. This analysis shows that the most important corrosion control aspect of a DC powered transit system is the control of stray earth currents. The most important factor in this control is establishing and maintaining a high level of electrical isolation of the negative return system. Failure to do this could require extensive additional construction cost such as electrically bonding the tunnel.

Another aspect of the study, Task 6, considers atmospheric corrosion. Significant factors which can be expected to contribute to atmospheric corrosion include condensation, acid fog and atmospheric pollutants. Materials selection, avoidance of unacceptable bimetallic couplings and coatings are among the recommendations to control atmospheric corrosion. Some special test programs for metals are also recommended in this task.

Recommendations to control stray earth currents are set forth in Task 7. These recommendations address traction power substation spacing, conductance within the positive and negative power distribution circuits and electrical isolation of both the positive and negative circuits. The most important recommendations are those which should result in a high negative circuit-to-earth resistance. Yard and mainline track must be electrically isolated.

The final portion of the corrosion control study, Task 8, describes design criteria for the control of corrosion. These design criteria include specific requirements to mitigate the three general categories of corrosion. Also included are standard corrosion control specifications and revisions and/or additions to specific specifications for the Project being prepared by others.

It is imperative that the corrosion control recommendations set forth in this report be incorporated into the design specifications prepared for the Metro Rail Project. The importance of this occurring and the consequences of not designing corrosion control measures into the Project are stated above and throughout this report. All aspects of the design, specifications preparation and drawings should be reviewed periodically by a corrosion engineer to assure conformity with corrosion control. Incorporation of corrosion control into design should extend the service life, reduce maintenance costs, minimize stray current and improve safety and reliability of the Metro Rail Project.

Recommendations

1.0 General

The recommendations listed in this section are a condensed summary of the more detailed recommendations listed in the various task reports. These recommendations are divided into the three major corrosion categories which are stray current corrosion control, underground corrosion control and atmospheric corrosion control. Although all major corrosion control recommendations are summarized in this section, the design criteria and individual interim reports should be consulted for more specific information.

2.0 Stray Current Corrosion Control

2.1 General

2.1.1 Limit the maximum stray earth current generated by normal system operations to 0.10 amperes per 1,000 feet of system.

2.1.2 Design and construct an electrically ungrounded earth relative to the positive and negative power distribution circuits.

2.2 Traction Power and Distribution (Mainline)

2.2.1 Substations

2.2.1.1 Provide sufficient traction power substations, spaced at proper intervals, to maintain track-to-earth potentials at levels which will be safe for both workmen and patrons, and will not create unreasonable requirements for stray current control.

2.2.1.2 Traction power substations shall not be used to provide power to both the Metro Rail Project and any future surface street car (LRV) lines.

2.2.1.3 Provide an allocated wall space within substations for future stray current test facilities.

2.2.1.4 Provide electrical access to the negative bus for future stray current testing by utility operators.

2.2.2 Positive Distribution System

2.2.2.1 The positive distribution system shall have a minimum in-service resistance to earth of 10 million ohms per 1,000 feet of contact rail.

2.2.2.2 Individual contact rail insulators shall have an in-service resistance in excess of 1,000 megohms.

2.2.2.3 The positive distribution system shall be operated as an electrically continuous bus with no breaks, except two conditions: (1) emergency fault conditions, and (2) intentional electrical segregation of yard and mainline traction power distribution systems.

2.2.2.4 Connect contact rail support pedestal reinforcing steel to contact rail support anchor bolts and to invert reinforcing steel.

2.2.2.5 Install a protective coating or gasket between the contact rail metallic support plates and the surface of the concrete support.

2.2.3 Negative Distribution System

2.2.3.1 Insulate the negative power distribution system (principally running rails) from earth with no direct metallic connections to ground or other structures which are not insulated from earth.

2.2.3.2 Install the negative distribution system such that it has a reasonably maintainable, minimum in-service resistance-to-earth of 1,500 ohms per 1,000 feet of track (2 rails).

2.2.3.3 Use assembled rail fixation or fastening devices, complete with grout pad, that have a minimum resistance of 10 megohms dry and 400,000 ohms after one hour exposure to a fine mist spray with a delivery rate of 1-inch of water per hour.

2.2.3.4 Construct track such that the negative system-to-earth resistance shall be uniformly distributed over all mainline track such that any definable section does

not have a resistance value less than 90% of the minimum value of 1,500 ohms per 1,000 feet of track (2 rails).

2.2.3.5 Install ancillary systems, train control devices, communication devices, or other facilities that are connected to the negative system such that they result in no more than a 2% reduction of the stated minimum criteria value for negative system resistance.

2.2.3.6 Crossbond inbound and outbound tracks at all traction power substations and passenger stations. The final arrangement shall result in crossbonds within 500 feet of stations platforms and an approximate average maximum spacing of one mile.

2.3 Vehicle Storage and Maintenance Facilities

2.3.1 Yard

2.3.1.1 Electrically isolate the yard positive and negative power distribution networks from the mainline traction power system at the yard/mainline train control interface.

2.3.1.2 Include provisions for emergency interconnection of the mainline power system and the separate transformer rectifier unit for the yard.

2.3.1.3 Include provisions in the yard traction power substation for stray current drainage of both yard and outside structures.

2.3.1.4 Design and construct yard track such that a reasonable level of insulation from earth is achieved without the need for special insulating rail fastening devices.

2.3.1.5 Crossbond the negative power rail within the yard to maximize the conductance of the negative return and thus minimize the track-to-earth potential produced by operations within the yard.

2.3.2 Maintenance Shop

2.3.2.1 Provide a separate dedicated DC power supply for shop traction power that is electrically segregated in both the

positive and negative circuits from the yard traction power system.

2.3.2.2 Electrically ground shop track to the shop building and shop grounding system to reduce potentials between the track and building components for safety.

2.3.2.3 Electrically insulate all grounded shop track from yard track just off the shop building apron by the use of rail insulating joints.

2.4 Tunnel and Trackway Support Structures

2.4.1 General

Stray current control recommendations for tunnel and trackway support facilities require a minimum negative system-to-earth resistance of 1,500 ohms per 1,000 feet of track. Failure to follow recommendations of 2.1 through 2.3 above would invalidate the recommendations in this section and could lead to extensive stray current problems on tunnel structures and foreign utilities.

2.4.2 Tunnel

2.4.2.1 Construct the tunnel such that water infiltration is not from above the spring line and does not drop onto or run directly onto the rails and/or rail appurtenances.

2.4.2.2 Limit water accumulation through proper drainage such that it does not attain a level higher than 1-inch below the top surface of the rail fastener grout pad or other support device.

2.4.2.3 Limit water infiltration to a level which will result in a humidity within the tunnel of no more than 60% during normal revenue operations. Ensure that those appurtenances (switch operating rods, power cable clamps, etc.) which extend beneath the bottom rail flange do not contact water or other conductive materials which may accumulate on the tunnel invert.

2.4.2.4 If rail-to-earth resistance is maintained at 1,500 ohms per 1,000 feet, there are no special or minimum stray current control

requirements for precast concrete segmented rings, steel tunnel liners, concrete track inverts, or passenger stations except as required for testing and monitoring.

2.4.3 Track Support Facilities

2.4.3.1 Construct grout pads for rail fastener support and leveling of epoxy or polymer modified concrete having a maximum water absorption of 2.0% by weight as determined by ASTM-C-140.

2.4.3.2 Construct grout pads such that their top surface has an elevation above the surface of the invert that is one inch above the maximum level of accumulated water.

2.4.3.3 Construct drainage channels through grout pads when pads are of such a length that they will support several rail fasteners.

2.5 Utility Structures

2.5.1 SCRTD Facilities - Mainline

2.5.1.1 There are no special stray current control requirements for metallic pressure or non-pressure piping exposed within the tunnel structure or embedded in the invert.

2.5.1.2 Electrically insulate all metallic pressure piping that penetrates the tunnel or station walls from outside piping and from watertight wall sleeves.

2.5.1.3 Coat with bitumastic coating for a distance of six inches on each side of the interface, all metallic non-pressure piping that passes through a concrete/soil interface.

2.5.1.4 Make all underground buried metallic piping systems outside of the transit structure electrically continuous by installing AWG #4, 7 stranded copper wires across all mechanical joints.

2.5.1.5 Install permanent test stations on all electrically continuous piping at each tie-in to the existing outside utility facility, at 150 foot intervals along the

piping and at each point of exit from the tunnel or station structure.

2.5.1.6 Avoid the installation of buried pipes at other than normal utility depths.

2.5.2 SCRTD Facilities - Yard

2.5.2.1 Use non-metallic materials for all underground pressure and non-pressure piping and conduits installed within the yard area if mechanically acceptable.

2.5.2.2 Make all underground metallic pressure piping (if used) within the yard area electrically continuous by installing #4, 7 stranded copper wires across all mechanical joints and couplings.

2.5.2.3 Electrically insulate all underground metallic pressure piping from interconnecting piping and other structures, including metallic casings that may be used, when the pipe crosses under tracks.

2.5.2.4 Coat all underground metallic pressure piping with a protective coating having a minimum in-service resistivity of 10^{10} ohm-centimeters on all external surfaces that will contact soils.

2.5.2.5 Install provisions for stray current drainage consisting of an AWG #4/0 cable(s) housed in conduits(s) routed from all underground metallic pressure piping to the drainage area in the yard traction power substation.

2.5.2.6 Install test stations at all insulated connections and at 150 foot intervals along all underground metallic pressure piping.

2.5.2.7 Make all metallic fencing surrounding the yard perimeter electrically continuous.

2.5.3 SCRTD Facilities - Shop

2.5.3.1 Electrically connect all steel reinforcing, structural steel members and rails within the shop building to each other through a common grounding grid such that ground faults or normal operations do

not build up voltages in excess of limits established for equipment and personnel.

2.5.3.2 Electrically insulate all metallic pressure piping within the shop from interconnecting pressure piping located outside the shop building.

2.5.3.3 Electrically insulate all metallic pressure piping within the shop from watertight wall sleeves.

2.5.3.4 Electrically connect all metallic pressure piping within the shop to the building grounding network such that there will be no more than a negligible potential difference between the piping and grounding network during fault or normal operating conditions.

2.5.3.5 Apply a bituminous mastic coating to the external surface of all metallic non-pressure piping and conduits within the shop where it passes through a concrete/soil interface.

2.5.3.6 Electrically connect all metallic non-pressure piping and conduits within the shop to the building grounding network such that there will be no more than a negligible potential difference between the piping or conduit and the grounding network during fault conditions or normal operations.

2.5.4 Facilities of Other Than SCRTD Ownership

2.5.4.1 Non-SCRTD owned facilities along the mainline portion of the system do not require any stray current control except as may be established by individual owners/operators.

2.5.4.2 Review all non-SCRTD owned facilities adjacent to the yard area to determine the need for test facilities and possible stray current corrosion mitigation.

2.6 Testing and Monitoring

2.6.1 General

Install facilities to allow for electrical measurements, test procedures, acceptance criteria

MTA LIBRARY

and other pertinent provisions to ensure, check and evaluate the stray current control measures at the time of construction and during revenue operations.

2.6.2 Traction Power and Oistribution

2.6.2.1 Install permanent test facilities on each track at all traction power substation locations to allow for the periodic measurement of negative system-to-earth resistance characteristics.

2.6.2.2 Permanently install a stepped DC voltage source with a current rating up to 100 amperes and provisions for unattended interruption for use in periodically measuring track-to-earth resistances.

2.6.2.3 Install permanent potential monitor recorders at a minimum of seven locations to monitor and record negative system-to-earth potentials caused by operations.

2.6.2.4 Install facilities at each traction power substation to automatically ground the negative system during the occurrence of unsafe DC potentials created by a positive system-to-earth fault.

2.6.3 Tunnel and Trackway Support Structures

2.6.3.1 Install permanent test facilities for stray current monitoring on steel tunnel liners with a length in excess of 2,000 feet.

2.6.3.2 Install permanent test reference electrodes for stray current monitoring through the wall of each tunnel at 1,000 foot intervals (exclusive of station structures) in the wall most removed from the adjacent tunnel.

3.0 Corrosion Control for Buried Structures

3.1 Concrete and Reinforced Concrete Structures

3.1.1 Precast Segmented Liner Panels

3.1.1.1 Use sulfate resistant Type V Portland cement for all concrete.

3.1.1.2 Allow a maximum water/cement ratio of .37 by weight in conjunction with the use of an air entrainment admixture resulting in a maximum air content of 6% by volume to establish a low permeability concrete to prevent absorption of ground waters high in chloride concentrations.

3.1.1.3 Allow a maximum of 200 ppm chloride concentration in mixing water.

3.1.1.4 Apply a coal-tar epoxy protective coating with a minimum resistivity of 10^{10} ohm-centimeters, to the external surfaces.

3.1.1.5 Establish a minimum 2-inches concrete cover over steel reinforcing on the external surface of the panel.

3.1.2 Cast-In-Place Concrete/Reinforced Concrete

3.1.2.1 Use sulfate resistant Type V Portland cement for all structures south and east of Wilshire and Fairfax passenger station, inclusive.

3.1.2.2 Use sulfate resistant Type II Portland cement for all structures north and west of Wilshire and Fairfax passenger station.

3.1.2.3 Allow a maximum water/cement ratio of .40 by weight in conjunction with the use of an air entrainment admixture resulting in a maximum air content of 5.5% by volume to establish a low permeability concrete.

3.1.2.4 Allow a maximum 200 ppm chloride concentration in mixing water.

3.1.2.5 Use a minimum 2-inches concrete cover on the soil side of all steel reinforcement when the concrete is poured within a form or a minimum 3-inches cover when the concrete is poured directly against soils.

3.1.2.6 Apply a protective coating to the exterior surfaces (soil contacting surfaces) south and east of Wilshire and Fairfax passenger stations, and other areas where soils and/or ground waters have a pH less than or equal to 5.0 or a chloride concentration greater than or equal to 350 ppm.

3.1.3 Concrete/Reinforced Concrete Not in Contact With Soils

3.1.3.1 Allow a maximum of 200 ppm chloride concentration in mixing water.

3.2 Piping and Conduits

3.2.1 Pressure Piping

3.2.1.1 Coat all external surfaces of metallic pressure piping with a protective coating having a minimum in-service resistivity 10^{10} ohm-cm.

3.2.1.2 Electrically insulate all metallic pressure piping from interconnecting piping and other structures through use of non-metallic pipe inserts, insulating flanges, couplings, or unions.

3.2.1.3 Make all metallic pressure piping electrically continuous through the installation of insulated copper wires across all mechanical joints.

3.2.1.4 Install test stations on all metallic pressure piping at all insulated connections and along the piping at 150 foot intervals.

3.2.1.5 Install cathodic protection on all metallic pressure piping through either impressed current or sacrificial anode systems.

3.2.2 Copper Pipe

3.2.2.1 Install an insulating union on buried copper piping just inside the station or structure wall.

3.2.3 Reinforced/Prestressed Concrete Pipe

3.2.3.1 Apply a protective coal-tar coating to the exterior surfaces of all reinforced and prestressed concrete pipe to provide an electrical and waterproof barrier between the soil and pipe.

3.2.3.2 Use water/cement ratios of .30 by weight for the core concrete and .25 for the outer mortar coating to establish a low permeability concrete.

3.2.3.3 Allow a maximum of 200 ppm chloride concentration in mixing water for concrete used in core fabrication and outer mortar coating.

3.2.3.4 Use Type II sulfate resistance cement for soil sulfate concentrations less than or equal to 2,000 ppm or ground water concentrations less than or equal to 1,000 ppm.

3.2.3.5 Use Type V sulfate resistance cement for soil sulfate concentrations greater than 2,000 ppm or ground water concentrations greater than 1,000 ppm.

3.2.4 Gravity Flow Piping (Non-Pressured)

3.2.4.1 Use non-metallic pipe for all gravity fed piping for water drainage systems if mechanical considerations and soil conditions are suitable.

3.2.4.2 Galvanize both the interior and exterior of corrugated steel piping to a combined minimum thickness of 2.0 oz. per square foot of coated surface.

3.2.4.3 Apply a protective coating with a minimum resistivity of 10^{10} ohm-centimeters on both the internal and external surfaces of all corrugated steel piping.

3.2.4.4 Apply an internal mortar lining and an application of bituminous seal coating to both the internal mortar lining and external surfaces of all cast or ductile iron pipings.

3.2.4.5 Use water/cement ratios of .30 by weight for the core concrete and .25 for the outer mortar coating to establish a low permeability concrete for all reinforced concrete pipe.

3.2.4.6 Use a maximum of 200 ppm chloride concentration in mixing water for concrete used in core fabrication and outer mortar coating of all reinforced concrete pipe.

3.2.4.7 Use Type II sulfate resistant cement for all reinforced concrete pipe to be installed in soil sulfate concentrations less than or equal to 2,000 ppm or ground

water concentrations less than or equal to 1,000 ppm.

3.2.4.8 Use Type V sulfate resistant cement for all reinforced concrete pipe to be installed in soil sulfate concentrations greater than 2,000 ppm or ground water concentrations greater than 1,000 ppm.

3.2.4.9 Apply a bituminous seal coating to the internal and external surfaces of all reinforced concrete pipe.

3.2.5 Electrical Conduits

3.2.5.1 Electrical conduits for below grade (buried) use shall be non-metallic (PVC, fiberglass, or similar material) if possible.

3.2.5.2 If metallic conduits are used, use galvanized steel with a PVC topcoat (or other acceptable coating) for direct burial, including couplings and fittings.

3.2.5.3 Use a minimum of 3-inches concrete cover on soil sides within duct banks of all galvanized steel conduits.

3.2.5.4 Assure electrical continuity for all metallic conduits.

3.2.6 Hydraulic Elevator Cylinders

3.2.6.1 Apply an external protective coal-tar epoxy coating with a minimum in-service resistivity of 10^{10} ohm-centimeters and resistance to deterioration from petroleum products (hydraulic fluid).

3.2.6.2 Install an outer concentric fiberglass reinforced plastic (FRP) casing supplemented with an outer steel casing with the space between casings filled with silica sand.

3.2.6.3 Place silica sand fill between the hydraulic cylinder and RFP casing having a minimum resistivity of 25,000 ohm-centimeters, a pH between 7 and 7.5 and a maximum chloride and sulfate ion concentration less than 100 ppm for each.

3.2.6.4 Install cathodic protection through the use of sacrificial anodes in the sand fill.

3.2.6.5 Install test facilities on the hydraulic cylinder, anodes and reference electrodes to permit evaluation and activation of the protection system.

3.2.7 Non-SCRTD Owner Facilities

3.2.7.1 Corrosion control requirements for underground facilities to be constructed as part of this project and owned/operated by others shall be the responsibility of the individual owners.

3.2.8 Corrosion Control Components and Subsystems

3.2.8.1 Establish electrical continuity for all metallic piping by exothermically welding two or more AWG #4 insulated, stranded copper wires (maximum of 18-inches in length) between or across each pipe joint or coupling that must be made continuous; using two wires for pipe 12" or less in diameter and three wires for pipe 16" or more in diameter.

3.2.8.2 Use wires with seven stranded copper having 98.9 percent International Annealed Copper Standard conductivity and 600 volt Type THW insulation.

3.2.8.3 Use non-metallic inserts, preassembled insulating flanges, couplings, insulating unions, or concentric support insulating spacers to achieve electrical insulation of pipe where applicable.

3.2.8.4 Coat all insulating devices (except complete non-metallic units) with coal tar epoxy internally for a distance on each side of the insulator equal to two times the diameter of the pipe in which it is used.

3.2.8.5 Encase all insulating devices (except non-metallic units) buried in soils in a hot-applied protective coating (such as asphalt) to provide a minimum coverage of 1-inch around all components.

3.2.8.6 Apply a protective coating over all components of each insulating device installed in chambers or otherwise exposed to partial immersion or high humidity.

3.2.8.7 Cathodic protection rectifier units consisting of a transformer, silicon or selenium full wave bridge rectifier, instrument wiring, terminal board, internal circuit breaker, DC output ammeter and voltmeter suitably mounted in a cabinet or other appropriate enclosure.

3.2.8.8 Use sacrificial anodes consisting of a galvanized steel strip core bonded to a magnesium alloy and either a ribbon or casting of specified weight and shape.

3.2.8.9 Use impressed current anodes consisting of high silicon, chrominum bearing iron with a minimum of 14% silicon and 4% chromium, and that are tubular with copper wire attached inside the center of the anode using a precast lead connection and encapsulated to prevent moisture penetration.

3.2.8.10 Use protective coatings for underground corrosion control which have a minimum resistivity of 10^{10} ohm-centimeters, in service.

3.2.9 Testing

3.2.9.1 Include provisions and facilities in all underground corrosion control designs for testing to insure compliance with design specifications.

3.2.9.2 Conduct operational and activation tests on all underground corrosion control systems to establish proper and effective functioning.

4.0 Atmospheric Corrosion Control

4.1 Above Grade Metals and Coatings (those exposed to weather)

4.1.1 Steels and Ferrous Alloys

4.1.1.1 Apply a barrier and/or sacrificial type coating to all external surfaces of carbon steels, alloy steels, weathering steels,

cast or ductile irons exposed to the atmosphere outside the tunnel area.

4.1.1.2 Use series 200, 300 or chronium-molybdenum ferritic type, stainless steel (e.g. type 444) for exposed surfaces in unsheltered environments and where appearance is critical or a necessary consideration.

4.1.1.3 Use columbium/titanium stabilized grades or extra low carbon grades of stainless steel when welding is required.

4.1.1.4 Apply a protective coating (barrier type) to stainless steels only when appearance is critical.

4.1.1.5 Clean and passivate all stainless steel surfaces after fabrication.

4.1.1.6 Restrict the use of ordinary series 400 stainless steels to sheltered areas or where appearance is not critical. (This restriction does not apply to the chromium - molybdenum ferritic types.)

4.1.2 Use only aluminum and aluminum alloys with a sealed hard anodized finish to minimize pitting corrosion (Finish A4X).

4.1.3 Apply a barrier type coating to copper and copper alloys only where the natural patina is not desired or where there will be intermittent contact with acid rain or fog.

4.1.4 Apply a barrier type coating to all magnesium alloys when long term appearance is critical.

4.1.5 Coatings for Steel and Ferrous Alloys

4.1.5.1 Use primer and topcoat systems which are compatible and supplied by the same manufacturer.

4.1.5.2 Apply hot dip galvanizing when specified to a weight of 2 oz. per square foot on the exposed surface.

4.1.5.3 Repair damage to galvanized areas with an inorganic zinc coating or flame sprayed zinc.

4.1.5.4 Apply flame sprayed zinc when specified to a minimum thickness of 10 mils.

4.1.5.5 Apply a seal coat of vinyl or epoxy coating over flame sprayed zinc.

4.1.5.6 Use Type II aluminum coatings with a minimum thickness of 2 mils when applied to steels.

4.1.5.7 Use flame sprayed aluminum having a minimum thickness of 10 mils and top seal coat of vinyl or epoxy when applied to ferrous alloys.

4.1.5.8 When used as a primer, apply inorganic zinc to a minimum thickness of 2 mils and a maximum of 3 mils.

4.1.5.9 Apply vinyls or epoxy topcoats over inorganic zinc primer, with an additional aliphatic polyurethane topcoat over epoxy where appearance is critical.

4.1.5.10 Apply polyurethane coating over an epoxy primer when appearance is critical.

4.1.6 Coatings for Non-Ferrous Metals

4.1.6.1 Use compatible primer and topcoat supplied by the same manufacturer.

4.1.6.2 Use wash primers on stainless steels, copper, and copper alloys and magnesium alloys.

4.1.6.3 Anodize aluminum alloys.

4.1.6.4 Use epoxy topcoats where appearance is not critical, or with an additional topcoat of polyurethane for appearance.

4.2 Below Grade Metals and Coatings (Inside Tunnels and Stations

4.2.1 Steels and Ferrous Alloys

4.2.1.1 Coat carbon steels, alloy steels, weathering steels, cast or ductile irons throughout the tunnel and station areas, including those items which will be exposed to intermittent immersion or contact (splash) with seepage water, using a sacrificial primer and heavy barrier type topcoat.

MTA LIBRARY

4.2.1.2 Coat carbon steel tunnel liners with an inorganic zinc primer and a coal-tar epoxy topcoat system with an established performance record for the intended service.

4.2.1.2. Use 300 series stainless steel where stains would be objectionable.

4.2.1.3 Use Type 304, 316, 317, 444, Carpenter 20 or higher grade of stainless steel where contact with seepage water is expected.

4.2.1.5 Do not coat those stainless steel surfaces on which continuous contact or complete immersion in seepage water is anticipated.

4.2.1.6 Clean and passivate all stainless steel after fabrication.

4.2.2 Aluminum and Aluminum Alloys

4.2.2.1 Apply a barrier type coating to anodized aluminum (finish A4X) exposed to seepage water.

4.2.2.2 Use aluminum alloys resistance to acid chloride stress corrosion cracking in areas where water seepage is likely. Suitable alloys include 2024-T8, 2219-T6, 2219-T8, 6061-T6, 7075-T73, 7075-T736.

4.2.3 Copper and Copper Alloys

4.2.3.1 Coat with a high performance barrier type coating where these metals will be exposed to seepage waters.

4.2.3.2 Coat exposed areas with a heat cured or thermosetting lacquer where discoloration of these materials would be objectionable.

4.2.3.3 Do not use brass alloys with a zinc content greater than 15 percent in areas where they will be exposed to seepage waters.

4.2.4 Hardware Specific Items Used Inside Tunnels

4.2.4.1 Review in detail steel fastener arrangement selected for securing precast tunnel liner panels to determine the need for protective measures or specialized materials.

4.2.4.2 Provide no special or minimum atmospheric corrosion control for electrical equipment and enclosures (switch boxes, transformers, connection cabinets and similar facilities) located in an air conditioned environment.

4.2.4.3 Provide electrical equipment and enclosures located in a nonair-conditioned environment where no exposure to seepage waters anticipated with the following:

- Coat steel or ferrous surfaces with a sacrificial primer and a barrier topcoat.
- Internally heat unsealed cabinets to prevent condensation.
- Coat all non-oil immersed internal metallic components with a barrier topcoat.
- Use vapor phase inhibitors on all sealed cabinets and enclosures where the seal can be expected to be maintained.

4.2.4.4 Provide electrical equipment and enclosures located in nonair-conditioned environment where exposure to seepage waters is anticipated with the following:

- Use non-metallic or stainless steel enclosures and fasteners wherever possible.
- Do not use standard manufacturers finish or uncoated galvanized steel fittings.
- Coat steel surfaces with a sacrificial primer and a barrier topcoat.
- Internally heat cabinets to prevent condensation.
- Coat all non-oil immersed internal metallic components with a barrier topcoat.

MTA LIBRARY

- Use vapor phase inhibitors on all sealed cabinets and enclosures where the seal can be expected to be maintained.

4.2.4.5 Use aluminum with a sealed hard anodized finish (finish to be A4X) for exposed electrical conduits.

4.2.4.6 Allow a ½-inch separation between conduits and concrete surfaces.

4.2.4.7 Apply a barrier coating to conduit fastener surfaces contacting concrete surfaces.

4.2.4.8 Apply a sacrificial primer and a barrier top coating to miscellaneous steel and ferrous items where the item will be exposed to intermittent contact to seepage water.

4.2.4.9 Apply hot dip galvanizing or aluminizing to exposed surfaces of miscellaneous steel and ferrous items not exposed to contact with seepage water.

4.2.4.10 Anodize miscellaneous aluminum items and apply a urethane or vinyl topcoat where the item will be exposed to intermittent contact to seepage water.

4.2.4.11 Anodize miscellaneous aluminum items not exposed to intermittent contact with seepage water.

4.2.4.12 Apply a barrier type coating to all exterior steel surfaces of pumps used for drainage water ejection systems and use metallic linings suitable for the intended service for impellers and internal parts.

4.2.5 Coatings - Below Grade Service (In Tunnels and Stations)

4.2.5.1 Use barrier type coatings consisting of an inorganic zinc primer having a minimum dry film thickness of 2 mils and a maximum of 3 mils and a two coat application of an epoxy topcoat, either coal-tar, polyamide, ployamine, or polyester for steels.

4.2.5.2 Where appearance is critical, supplement the above with a topcoat of polyurethane.

MTA LIBRARY

4.2.5.3 Fusion bonded epoxy, polyester or nylon applied by fluidized bed or electrostatic spray can be used in lieu of the above.

4.2.5.4 Cermet (fused aluminum-ceramic) can be used on steel components and fasteners when such facilities are not exposed to water seepage.

4.2.5.5 Use a wash primer, epoxy primer and barrier topcoat for non-ferrous metals.

4.2.5.6 Anodize all aluminum.

4.2.5.7 Apply hot-dip galvanizing (zinc) to a minimum thickness of 2.0 oz. per square foot.

4.2.5.8 Apply flame spray aluminum or zinc to a minimum thickness of 10 mils, seal with an application of epoxy or vinyl and apply additional epoxy or vinyl intermediate and topcoats.

4.3 Transit Vehicles

4.3.1 Outer Shell (Cladding Panels)

4.3.1.1 Use series 200 or 300 for stainless steels.

4.3.1.2 Anodize and use series 5000 or 6000 for aluminum and consider application of a clear polyurethane sealer.

4.3.2 Structure

4.3.2.1 No coating or other minimal corrosion control measures are required for anodized aluminum and stainless steel structural components not exposed to the weather or seepage waters.

4.3.2.2 Use Type 304, 316 or equivalent grade stainless steel.

4.3.2.3 Use 5000 or 6000 series aluminum and consider anodizing.

4.3.3 Underframe Components

4.3.3.1 Coat steel with an inorganic zinc primer and an epoxy topcoat or flame sprayed aluminum with an epoxy topcoat.

4.3.3.2 Anodize and coat aluminum with an epoxy primer and a suitable topcoat.

4.3.4 Fasteners

4.3.4.1 Prevent fretting of riveted joints by using drilled holes and elastic panel seals.

4.3.4.2 Use either aluminum or 300 series stainless steel fasteners for aluminum to aluminum connections.

4.3.4.3 Use 300 series stainless steel fasteners for both 300 series stainless steel to 300 series stainless steel and aluminum to 300 series stainless steel connections.

4.4 Design and Mechanical Requirements

4.4.1 Construct facilities to eliminate crevices at joints and fasteners.

4.4.2 Use a sealant at crevices if design modifications are not feasible.

4.4.3 Avoid both aluminum to copper and copper to steel bimetallic couples through design modification or the use of dielectric separators.

4.5 Testing

4.5.1 Consider initiating a materials testing program to evaluate long term effects of Los Angeles pollution on metals, non-metals and coatings.

Input For Life Cycle Cost Estimates

For Major Corrosion Control Alternatives

The information presented in this section is to be used by the SCRTD in preparing life cycle cost estimates for the various corrosion control alternatives. This material is divided into three categories, namely; Stray Current Corrosion Control, Underground Corrosion Control and Atmospheric Corrosion Control. Each category includes our major recommendations with our best estimate of the cost increase, if any, as a percentage over base cost of the item mentioned (i.e. without our recommendations). In addition, the benefits of the major recommendations are so indicated either as increase in service life or in subjective terms. Items that require or represent maintenance items are so indicated with an estimate of cost increases. Lastly, a brief description of the alternatives available to the SCRTD is presented.

1. Stray Current Corrosion Control

1.1 Traction Power and Distribution

1.1.1 Positive Distribution

Stray current corrosion control recommendations for this item will not increase design, construction or maintenance costs by a measurable amount.

1.1.2 Negative Distribution System

1.1.2.1 Modify standard insulating direct fixation rail fasteners to increase track-to-earth resistance from a base value of 500 ohms to 1,500 ohms per 1,000 feet of track (2 rails). Anticipated cost increase is 5 to 10% over the cost of the standard direct fixation fastener.

a) Benefits realized through implementation of this recommendation will show up as minimal to no stray current corrosion control costs for transit system fixed facilities such as the tunnel and passenger station structures.

1.1.2.2 Design and install track-to-earth resistance test facilities and potential monitors and establish a periodic test program to measure track resistance and review track potentials; the periodic testing is a maintenance requirement. As such, anticipated cost increases associated with this recommendation would consist of the costs associated with five (5) to six (6) man weeks of work per year, assuming no major problems were encountered.

a) Benefits associated with this item are similar to those associated with any maintenance requirement, namely the preservation of the orignal integrity of the system.

1.1.3 Yard and Maintenance Shop

1.1.3.1 Electrically isolate yard traction power from mainline traction power and electrically isolate shop traction power from yard traction power systems. The extra costs associated with this stray current control feature is the extra substation for the shop and possibly some additional costs associated with providing a higher power yard substation. Our experience has shown that there are no practical alternatives to providing the separate substation for the maintenance shop because of both stray currents and, more importantly, the safety aspects for the poeple working in the shop. There will also be costs associated with additional switchgear in the negative power system to allow for emergency interconnection of the various power systems.

1.1.3.2 Benefits associated with this item will be realized as a reduction in stray current levels and will facilitate meeting the requirements of 1.1.2.1 above on the negative system. Alternatives to the recommended power system segregation require insulating yard track to a level equal to that of the mainline. This will require special fasteners for the extensive amount of special trackwork and standard track, the costs for which will be excessive. The relative costs of the various alternatives can best be estimated by those design disciplines responsible for the items mentioned.

1.2 Tunnel and Trackway Support Structures

1.2.1 Major stray current corrosion control requirements for these facilities are directly related to the level of track-to-earth resistance established. At a level of resistance from 1,000 to 1,500 ohms per 1,000 feet of track (2 rails), there are no stray current corrosion control costs for these items, except those associated with installation of test station facilities. Unit costs for these lesser items are estimated at $500.00 to $1,000.00, and will affect total tunnel construction costs by not more than 0.1%.

1.2.2 Stray current corrosion control costs for tunnel structural components can be excessive if track resistances are not within the range specified. The trade-offs available to the SCRTD are discussed in Section 1.4 below.

1.3 Utility Structures (Pipelines and Conduits)

1.3.1 Mainline Facilities

1.3.1.1 Major stray current corrosion control recommendations for facilities in this category include electrical insulation at selected locations (tie-ins and wall or roof penetrations), electrical continuity and installation of test stations. Estimated cost increases for these items, as compared to base costs for the utility structure, excluding these measures, is

less than 1.0%. This range is based on establishing the recommended level of track- to-earth resistance cited previously.

1.3.1.2 Benefits realized through implementation of these recommendations will be an extension of the service life of these facilities to in excess of fifty (50) years. Alternatives available, if minimum acceptable track-to-earth resistances are not established and maintained, include installation of stray current drainage provisions from each structure to traction power substations, extensive testing after construction and periodic maintenance and testing during the life of the facility (see trade-off discussion in Section 1.4).

1.3.2 Yard and Maintenance Shop Facilities

1.3.2.1 Major stray current corrosion control recommendations for metallic facilities in this category include electrical continuity, electrical insulation from interconnecting structures, protective coating, stray current drainage provisions and/or cathodic protection. Estimated cost increases for these items, as compared to base costs for utility structures within the yard, excluding these measures, is ten (10) percent. This is based on establishing electrical segregation between yard, shop and mainline traction power systems and is generally independent of mainline track-to-earth resistance as long as the resistance does not drop below the general range of 200 ohms per 1,000 feet.

1.3.2.2 Maintenance associated with this item will consist of periodic testing of the individual structures on a semi-annual or possibly annual cycle. Therefore, maintenance costs will be those associated with eight (8) to ten (10) man weeks of work per year.

1.3.2.3 Benefits realized through implementation of these measures will be an extension of the service life of these facilities indefinitely. Alternatives available include use of non-metallic piping and conduits, wherever possible and the maintenance, repair and replacement of the facilities. It is estimated that underground metallic piping in the yard would require major maintenance and some replacement within 10 to 15 years if stray current control measures are not provided.

1.4 Alternatives and Trade-Off Studies For Stray Current Corrosion Control

The major trade-off available to the SCRTD is the level of resistance that is established and maintained for the mainline negative system. As this level decreases, the cost for stray current corrosion control for other items in the transit system will increase dramatically. In essence, stray current control will be maximized, at minimum cost, by establishing an in-service level of 1,500 ohms per 1,000 feet of track (2 rails). This concept and the impact of

track-to-earth resistances on costs is summarized in Table 1.4. As indicated by the information shown in this table, overall stray current corrosion control costs will increase as obtained track-to-earth resistance decreases. The major trade-off available is whether monies should be spent to reduce stray current corrosion control costs on SCRTD facilities and other facilities by establishing the highest level of track-to-earth resistance possible or should monies be spent to mitigate stray current corrosion on both SCRTD facilities and those belonging to others as a result of establishing too low a level of track-to-earth resistance.

The best interests of the Southern California Rapid Transit District will be served by making judicious use of funds budgeted for stray current control by insuring that the funds are directed to the area where resulting benefits will be maximized, namely the in-service resistance-to-earth of the negative conductors (principally running rail).

Table 1.4

Summary of Stray Current Corrosion Control Costs (1)

Track-to-Earth Resistance (ohms/1,000'-2 rails)	Traction Power System		Tunnel and Trackway Support Facilities (5)	Utilities	
	Trackwork (2)	Yard and Shop		SCRTD	Other
1,000 to 1,500	5 to 10%	see text	<.1% for test facilities only	<1%	insignificant
500 to 1,000	0 to 10%	see text	up to 2% for collector mat and internal coating (bottom 1/3 of tunnel)	<1%	measurable, but less than any other cost increases
250 to 500	no significant cost increase	see text	3 to 4% for additional continuity of collector mat, internal coating and stray current drainage	5 to 10% for cathodic protection	(3)
less than 250	no cost increase cost will decrease if direct fixation fasteners not used	see text	4 to 5% for all of the above plus continuity of precast panels	5 to 10% for cathodic protection	(4)

(1) Percentages shown represent cost increase over base costs for the specific items which do not include recommended measures. See text for description of measures recommended.

(2) Percentage increases are relative to a base value of 500 ohms per 1,000 feet of track (2 rails) and apply to rail fasteners purchase price only.

(3) Area utilities will incur one time costs to evaluate stray current effects. These costs are difficult to estimate but may range anywhere from .5 to 1.0 million dollars.

(4) Estimating costs associated with mitigating stray current effects on non-SCRTD facilities is extremely difficult. One time costs starting at 5 million dollars is not unreasonable with maintenance costs of .25 million per year. These values can easily double if very low track resistances are obtained.

(5) All percentage cost increases are based on a tunnel construction cost of $120 million.

MTA LIBRARY

2. Underground Corrosion Control (Buried Structures)

2.1 Concrete and Reinforced Concrete Structures

2.1.1 Soil corrosion control for items in this category include use of special sulfate resistant cement in selected areas, use of air entraining admixtures, proper concrete cover over reinforcing steel and application of a protective coating to soil contacting surfaces in selected areas.

2.1.1.1 There are no cost increases associated with the use of sulfate resistant cements or proper concrete cover over reinforcing steel. Air entraining admixtures will increase the cost approximately 1.5 to 2.0 percent over the purchase price of concrete without any admixture.

2.1.1.2 Protective coating costs will be approximately $.50 per square foot and generally will add approximately three (3) to four (4) percent to the total cost of the concrete structure presently estimated to be 120 million dollars.

2.1.2 There are no practical alternatives available to the SCRTD relative to corrosion control for concrete and reinforced concrete structures. Failure to adopt the major recommendations could result in severe corrosion damage to these structures with corresponding increases in maintenance costs and overall reduction in service life of the structures. Furthermore, increasing corrosion damage to certain structures could impact water seepage into the tunnel areas, which in turn could affect stray current corrosion control measures.

2.2 Buried Pressure Piping

2.2.1 Soil corrosion control for items in this category include: electrical continuity, electrical insulation, protective coating and cathodic protection systems. Some of these measures are identical to those required for stray current control; hence soil corrosion control measures may represent the addition of one or two items, such as protective coating and cathodic protection system.

2.2.2 Estimated cost increase for complete cathodic protection will be ten (10) percent as compared to the base cost for the utility structure which does not include any of the recommended measures.

2.2.3 Benefits associated with corrosion control for buried piping systems will be an extension in service life and reduction in maintenance costs throughout the life of the protection system. Virtually no structure or corrosion control system maintenance is anticipated over the first twenty-five (25) years except for periodic testing of the corrosion control system to insure proper operation. This periodic testing is estimated at not more than ten (10) man weeks per year.

Beyond this, maintenance would be limited to that associated with the corrosion control system only, such as replacement of anodes and possibly rectifier units. Costs for these items generally will not exceed 20% of the original corrosion control system costs with the first expenditure not anticipated until after 25 years and subsequent expenditures occurring at 25 year intervals thereafter. It must be noted that these costs are not incurred on an annual basis, but only when the system requires rehabilitation.

2.2.4 Alternatives available to the SCRTD are based on whether monies should be spent to design and construct cathodic protection systems or whether piping should be installed without such measures. The costs associated with cathodic protection will be more than offset by a reduction in maintenance and total operating costs for the particular structure being considered. Also, elimination of premature failure will improve overall system integrity and continuity of operations.

3. Atmospheric Corrosion Control

An economic analysis of corrosion control by coatings and materials selection when applied to the SCRTD Metro Rail Project is made difficult because of the many variations in the project. Coatings and material costs will vary depending on the nature of the particular item to be coated or fabricated. Galvanizing costs, for example, will be different for coating bolts and coating an I-beam. Therefore, any analysis that does not compare costs on a common basis will be misleading. This section provides relative cost comparisons which provide guidelines for evaluating costs for specific items.

3.1 Coatings

The Task 6 report recommends that carbon and alloy steel be coated to protect them from corrosion to extend their useful life and for aesthetic reasons. Use of a coating will cost approximately one percent of the total costs of the steelwork. The extension of the service life is indefinite provided routine maintenance is performed. Extensive replacement costs can be anticipated if the steelwork is not coated. The equipment life expectancy depends on allowable safety factors for the structure. Rust staining will also mar the appearance of the structure and corroded parts which must be removed resulting in costly maintenance delays.

Table 3.1 presents a chart showing the initial and maintenance coating costs and expected recoat cycles for several coating systems that might be used on the Metro Rail Project. Costs are presented as a percentage increase over the cost of a base system. Initial coating costs include materials (coating), application and surface preparation. Additional costs such as scaffolding and inspection must be included where applicable but should be consistent for all of the coatings. Coating cost can be broken down

into components with the approximate percentage costs of each compared to the total cost as follows:

Preparation	40%
Materials	20%
Application	40%

Shop applied coatings are often less expensive than field applied coatings because they can be applied under production line conditions and are often more durable because they are applied under controlled conditions.

The Task 6 report recommended that aluminum surfaces by anodized. Anodizing will add approximately 14 percent to the cost of the aluminum. The purpose of anodizing is to either provide a more pleasing appearance or to provide a firm base for further coating. Coating costs for aluminum will be similar to those for steel except that preparation costs will be replaced by anodizing costs. Aluminum is not expected to corrode to such an extent as to require replacement. Anodizing and coating will reduce the costs required to maintain the appearance of the structure.

3.2 Materials

The relative costs of the more commom materials recommended in the Task 6 report as a percentage increase over the cost of carbon steel are:

Carbon steel, uncoated	0
Galvanized steel	10 - 20%
Aluminum, uncoated	70 - 300%
Stainless steel, 304	90 - 570%
Stainless steel, 316	500 - 700%

Material costs vary considerably, depending on size, geometry, physical requirements, alloy, weight and quantity to be produced.

The cost of carbon steel will increase compared to the others since it must be coated and that coating maintained. The cost of stainless steel is justified in many instances because even though the percentage increase over the alternatives (steel and aluminum) appears high, the actual increase in cost is not significant. The cost increase is often justified since, once it is installed, maintenance costs are low, i.e. painting is not required.

3.3 Tunnels

Reduction in the amount of seepage water will reduce the need for expensive corrosion resistant materials and coatings in the tunnel area. Unprotected carbon steel, galvanized steel and aluminum will corrode at rapid rates in high chloride acidic seepage water. Replacement of unprotected carbon steel in the tunnel liners and

trackwork can be expected in a few years in the presence of seepage water.

Coatings will protect steel from corrosion caused by condensation and eliminate the need for more expensive materials. The service lives for coatings given in Table 3.1 are for exterior exposure. Coatings used inside of tunnels will not be exposed to the deteriorating effects of ultraviolet radiation and air pollution. Longer time intervals on the order of 100% should be attained before the need for recoating.

Table 3.1

Coating Costs and Expected Maintenance Intervals

Coating System Option	Percent Cost Increase Over Base System Initial	Recoat	Recoat Interval Years (1)	Comments
1. Alkyd, 3 coat	0	0	4	Base
2. Acrylic, 3 coat	33	33	5	
3. Vinyl, 3 coat	48	48	7	
4. Epoxy primer, 2 coat acrylic	56	56	10	
5. Inorganic zinc, 2 coat epoxy	70	13	10	Touch up and apply topcoat only
6. Epoxy primer, polyurethane	42	42	11	
7. Inorganic zinc, 2 coat vinyl	85	26	12	Touch up and apply topcoat only
8. Inorganic zinc, epoxy, urethane	89	14	12	Touch up and apply topcoat only
9. Galvanized steel	-44	(2)	15	Shop applied only
10. Aluminized steel	-44	(2)	15	Shop applied only
11. Fusion bonded epoxy (3)	-60	(2)	15	Shop applied only
12. Flame spray aluminum	425	(2)	30	Shop or field application

Notes:

1. Touch up before this time anticipated. Complete recoat at 10 percent deterioration. Exterior exposure.

2. Depends on coating selected.

3. Not suitable for large structures.

TASK 1

MANAGEMENT INFORMATION AND REPORTING

The requirements of this task were to provide a project work plan, contract cost estimate and periodic progress and cost budget reports. These requirements were accomplished during the course of the contract. No final report is required.

TASK 2

CODES, REGULATIONS AND EXISTING CONDITIONS

Table of Contents

Section No.	Title	Page
1.	SUMMARY	2-1
2.	CODES, REGULATIONS AND INDUSTRY PRACTICES	2-2
3.	EXISTING LOCAL CONDITIONS	2-4
3.1	GAS PIPELINES	2-4
3.2	HAZARDOUS LIQUIDS PIPELINES	2-6
3.3	WATER PIPELINES AND STRUCTURES	2-9
3.4	CABLES	2-11
APPENDIX A		2-A-1
APPENDIX B		2-B-1
APPENDIX C		2-C-1

1. SUMMARY

There are two objectives of work performed for Task 2 of Waters Consultants' Corrosion Control contract. The first is to identify and record all special regulations, codes and industry practices which are applicable to cathodic protection of the proposed Metro Rail Project and neighboring installations. The second is to review and compile appropriate data from local utility companies and other owners of underground facilities to document pertinent data on existing local conditions.

Pipelines which transport natural, flammable, toxic or corrosive gas are regulated by Part 192, Title 49 of the Code of Federal Regulations. Pipelines which transport hazardous liquids such as petroleum, petroleum products and anhydrous ammonia are regulated by Part 195, Title 49 of the Code of Federal Regulations. Pipelines which transport water or other nonhazardous fluids are not required to have corrosion control measures implemented on them. However, internal policies of some companies do provide cathodic protection for some strategic pipelines. Cables and wires are also not required to have corrosion control measures.

Industry practices applicable to cathodic protection and corrosion control vary greatly. Those pipeline operators which are regulated as described above generally comply with applicable federal regulations. Those pipelines, cables and other structure operators which are not regulated generally utilize cathodic protection and other corrosion control measures on only a portion of their structures. When cathodic protection is applied by unregulated operators, practices similar to those set forth in the National Association of Corrosion Engineers (NACE) Standard RP-01-69 are used.

Large numbers of metallic pipelines and cables exist within the influence of the Metro Rail Project. Most of the pipelines are owned and operated by Southern California Gas Company or the Los Angeles Department of Water and Power. Most of the metallic cables are owned and operated by the Los Angeles Department of Water and Power or Pacific Telephone Company. The remainder of buried structures within the influence of the Metro Rail Project are owned and operated by a variety of companies or public agencies.

Although Waters Consultant's professional engineering opinion cannot and should not be considered as legal counsel, it is believed that certain actions on the part of the District can serve to minimize future stray current related claims against the District. By far the most important measure is to minimize stray earth current from the Metro Rail Project to an acceptable level. This can best be accomplished by implementing the stray current control recommendations set forth in Tasks 5, 7 and 8 corrosion control reports prepared by this consultant.

Other beneficial actions have already been taken by the District. These include: hiring a corrosion consultant during the

preliminary design phase of the project, opening a dialogue with utilities through the Southern California Cathodic Protection Committee and interviews conducted for this report and documenting existing conditions as set forth in this report. It is recommended that the District continue to maintain a dialogue with all concerned utilities through the Southern California Cathodic Protection Committee to avoid misinformation and to preserve the spirit of cooperation which now exists. A baseline potential test to determine existing levels of stray current should be conducted within the year just prior to and just after beginning of revenue operations.

2. CODES, REGULATIONS AND INDUSTRY PRACTICES

There are two federal regulations and one state law applicable to cathodic protection of the Metro Rail Project and neighboring installations. In addition, the Uniform Fire Code and the National Fire Protection Association Flammable and Combustible Liquids Code refer to cathodic protection of certain structures. Industry practices generally meet or exceed applicable codes and regulations. Unregulated industries generally use NACE standards or their own similar standards on their structures which have cathodic protection. Copies of the above codes, regulations and standard shave been compiled into a single and separate document for future reference.

Codes and regulations which apply to cathodic protection and other corrosion control measures on Metro Rail Project structures are minimal. Corrosion control measures including cathodic protection would only be required by code or regulation for metallic gas piping and metallic fuel storage tanks and piping.

Pipelines which transport natural, flammable, toxic or corrosive gas to more than 100 customers are regulated by Part 192, Title 49 of the Code of Federal Regulations. This part of the Regulations contains requirements for corrosion control including cathodic protection. Generally, it states that:

1. All gas piping installed after July 31, 1971 must have cathodic protection.

2. All gas piping installed before July 31, 1971 must have cathodic protection if the pipeline has an effective external coating, and

3. All gas piping installed before July 31, 1971 that does not have effective external coating must have cathodic protection on areas in which active corrosion is found.

Pipelines which transport hazardous liquids including petroleum and petroleum products are regulated by Part 195, Title 49 of the Code of Federal Regulations. This part of the Regulations contains requirements for corrosion control including cathodic protection. Generally, it states that:

1. All hazardous liquid pipelines with an external coating must have cathodic protection.,

2. All hazardous liquid pipelines installed after March 31, 1973 must have an external coating and cathodic protection.

Part 195 allows states to adopt and enforce laws which are at least as stringent as federal regulations for intrastate pipelines that transport hazardous liquids. California has adopted Assembly Bill 911 which directs every city and country to adopt pipeline safety ordinances and regulations in substantial compliance with Part 195. The State is presently preparing guidelines for the implementation of this law.

In addition to federal and state regulations, the Uniform Fire Code and the National Fire Protection Association's Flammable and Combustible Liquids Code specify corrosion control measures for underground tanks, pipes and fittings containing combustible liquids. These codes require that unless tests show that soil resistivity is 10,000 ohm-cm or more and there are no other corrosive conditions, tanks and piping shall be protected by either cathodic protection or corrosion resistant materials of construction.

Pipelines which transport water or other liquids which are not hazardous are not required to have cathodic protection or other corrosion control measures by any federal, state or local codes or regulations. Likewise, electric power and communication cables and wires are not required to have cathodic protection.

Industry practices concerning the use of cathodic protection vary greatly. Operators whose pipelines are regulated generally comply with applicable codes and regulations. Operators whose pipelines, cables and other structures are not regulated use cathodic protection only where their corrosion engineer determines it to be necessary, beneficial and/or cost effective.

When cathodic protection is applied to an unregulated structure, the most widely used standard for evaluating its effectiveness is the National Association of Corrosion Engineers Standard RP-01-69. This standard is general and outlines a variety of acceptable methods to evaluate levels of cathodic protection. Individual operators of structures within the influence of the Metro Rail Project may use several of these methods to evaluate the level of cathodic protection on their structures. However, the most common criterion is the establishment of a negative (cathodic) voltage of at least 0.85 volt as measured between the structure surface and a saturated copper-copper sulfate reference electrode.

In addition to complying with federal regulations, the Southern California Gas Company has an operating manual which details their test procedures. However, they do not allow distribution of this manual outside the company and have declined requests to release this manual to the District. The American Telephone and Telegraph

Company also has an operating manual which details procedures which are to be used by Pacific Telephone Company. A copy of this manual is included in the document containing the corrosion control codes and regulations. The restrictions placed on the distribution of this document should be noted.

Leak records are maintained by all the operators of pipelines that transport hazardous gas or liquids. These records are required by Part 191 and Part 195, Title 49 of the Code of Federal Regulations for gas and hazardous liquid pipelines respectively. Although copies of these leak records were not released to us by the pipeline operators, they are maintained by each of their operators. The gas company indicated they did experience leaks in the vicinity of the proposed Metro Rail Project. Their leak records are maintained on a set of their "atlas sheets". However, leak records were not made available for our examination.

Leak records are also maintained by the Los Angeles Department of Water and Power, Water Division, but are too numerous to duplicate. These records are not mandated by any codes or regulations but are maintained to assist in locating problem areas. Similarly, records of corrosion failures are generally maintained by operators of power and communication cables. These are also not mandated by any codes or regulations.

3. EXISTING LOCAL CONDITIONS

This portion of the report documents the existing local conditions regarding buried metallic structures within the influence of the Metro Rail Project. The information which follows was obtained through interviews with one or more corrosion control or management personnel of the subject company or agency. Included are companies and agencies which own or operate buried metallic structures of significant size which are likely to be within the influence of the Metro Rail Project. Companies which were interviewed but do not have structures likely to be within the influence of the Metro Rail Project are included. This will allow companies or agencies not interviewed during this investigation to be identified more easily in the future.

In addition to the general information on individual companies listed below, copies of substructure drawings prepared for the District by the City of Los Angeles have been indexed to list all underground utility structures within the Project right-of-way. Drawings obtained from the Southern California Gas Company have been similarly indexed to allow for future reference.

The index to the substructure drawings is contained in a separate document submitted to the District. A list of the street intersections which have been indexed is included in this report as Appendix A. The indices to Southern California Gas Company drawing are included in this report as Appendix B and Appendix C.

3.1 Gas Pipelines

MTA LIBRARY

3.1.1 Park La Brea Apartments

The Park La Brea Apartment complex has several gas distribution pipelines within the influence of the Metro Rail Project. These pipelines are all within the large complex which is bounded by Fairfax Avenue on the west, Third Street on the north, La Brea Avenue on the east and Sixth Street on the south.

These pipelines are believed to range from one inch and eight inches in diameter. They are electrically isolated from the Gas Company pipelines which supply them by insulating joints. However, they are believed to be shorted to other grounded structures within the buildings they serve. A majority of this piping is believed to be galvanized steel without coating. Cathodic protection consists of only a few sacrificial anodes installed at leak locations. These would not normally be effective in mitigating corrosion of an unisolated piping system such as this.

3.1.2 Southern California Gas Company

The Southern California Gas Company has three distribution divisions and two transmission divisions that have pipelines within the influence of the Metro Rail Project. The distribution divisions are the Metropolitan Division, the Northwest Division and the San Fernando Valley Division. The transmission divisions are the North Basin Division and the South Basin Division.

In almost every street that the Metro Rail Project crosses or passes under the Southern California Gas Company has a pipelines. These are listed in the index to the utility substructure drawings. Copies of Gas Company drawings have also been obtained and submitted to the District. These have been marked using colored pens to indicate the pipe material, coating and whether it has cathodic protection.

Generalizations can also be made concerning the status of these pipelines. Transmission pipelines are electrically continuous and have coating and cathodic protection. Distribution pipelines are electrically continuous and may have cathodic protection. Those pipelines installed after 1971 should have coating and cathodic protection. Those installed before 1971 may have cathodic protection if corrosion has been found. Almost all pipelines installed after 1936 have a dielectric coating. Most installed prior to 1936 do not have a coating.

The Southern California Gas Company has many corrosion engineers and technicians to monitor their pipelines and cathodic protection systems. In addition, in trying to comply with federal regulations, the Gas Company has an operating

manual which outlines their procedures. They are not willing to distribute this manual outside their company.

3.2 Hazardous Liquid Pipelines

3.2.1 Atchison, Topeka and Santa Fe Railroad

The Atchison, Topeka and Santa Fe Railroad has not been contacted at the request of the Southern California Rapid Transit District.

3.2.2 Chevron

Chevron has one pipeline within the influence of the Metro Rail Project. This pipeline is located on the west side of the Los Angeles River between Jackson Street and Butte Street.

This 8" diameter pipeline was originally installed in 1931. It is steel with bituminous coating, but the quality of the coating is not known. It is believed that this pipe is exposed in many places. It is cathodically protected with sacrificial anodes. The close proximity of this pipeline to the maintenance yard area increases its chance of being influenced by stray current. Specific tests on this line are required once access to yard area can be realized.

Chevron has one corrosion technician monitoring their pipelines. They use federal regulations and National Association of Corrosion Engineers' recommended practices for evaluating their corrosion control measures.

3.2.3 Conoco

Conoco states that they do not own or operate any pipelines in the vicinity of the Metro Rail Project. Their nearest structures are near Ventura and Seal Beach.

3.2.4 Four Corners Pipe Line

Four Corners Pipe Line Company has one pipeline within the influence of the Metro Rail Project. This pipeline follows the Metro Rail Project right-of-way in Fairfax Avenue and continues into North Hollywood several blocks west of the end of the Project at Chandler Street.

This ten inch diameter pipeline was originally installed in 1925. However, portions of it have been replaced. The replacement portions have excellent coatings but the coatings on the original portions have deteriorated. There are some insulating joints between old and new portions of the pipeline which are bonded together at the present time. There are no known bonds between this pipeline and other pipelines.

In Fairfax Avenue the pipe has been renewed by installing an eight-inch pipeline inside the original pipeline. Both the inner and outer pipelines are electrically continuous and are believed to be electrically shorted to each other. The space between the inner and outer pipelines has been filled with bituminous material.

This pipeline is protected by direct current cathodic protection station rectifiers. One of these is near the Metro Rail Project. It is located near Fairfax Avenue at Willoughby Avenue. This rectifier normally provides 38.5 amperes of current using deep well anodes.

Four Corners Pipe Line Company has a corrosion engineer and two corrosion technicians monitoring their pipelines. They use federal regulations and National Association of Corrosion Engineer's recommended practices for evaluating their corrosion control measures.

3.2.5 Getty

Getty Oil Company states that they do not own or operate any pipelines in the vicinity of the Metro Rail Project. Their nearest structures are near Ventura.

3.2.6 Industrial Complex Near Maintenance Yard

The industrial complex surrounding the proposed maintenance yard adjacent to the Los Angeles River includes several companies that have underground fuel tanks and piping which may be within the influence of the Metro Rail Project. These companies include Fish King, Inmont, Manley Oil Corporation and Poppy Processing and Shipping. Due to the relatively small size of their underground facilities, these companies have not been interviewed in depth.

3.2.7 Mobil

Mobil Oil Company states that they do not own or operate any pipelines in the vicinity of the Metro Rail Project. Their nearest structures parallel the San Diego Freeway.

3.2.8 Shell

Shell Oil Company states that they do not own or operate any pipelines in the vicinity of the Metrol Rail Project.

3.2.9 Southern California Edison

Southern California Edison states that they do not own or operate any pipelines in the vicinity of the Metro Rail Project. Their nearest fuel oil pipeline is in El Segundo.

3.2.10 Southern Pacific Pipeline Company

Southern Pacific Pipeline Company has one pipeline within the influence of the Metro Rail Project. This pipeline follows the east side of the Los Angeles River from north of Macy Street to Seventh Street where it follows Santa Fe Avenue to the south.

This pipeline is ten inches in diameter and has a good quality mastic coating. It has a high level of cathodic protection provided by a rectifier near Alhambra Avenue and the Los Angeles River. The output of this rectifier is three amperes.

This pipeline is connected to a ten inch Union Oil Company pipeline at First Street. These pipelines are electrically separated from each other with an insulating joint.

Southern Pacific Pipeline Company has several corrosion engineers and technicians monitoring their pipelines. They use federal regulations and National Association of Corrosion Engineers recommended practices for evaluating their corrosion control measures.

3.2.11 Texaco

Texaco states that they do not own or operate any pipelines in the vicinity of the Metro Rail Project. Their nearest structure parallels the San Diego Freeway.

3.2.12 Union

Union Oil Company has one pipeline within the influence of the Metro Rail Project. The close proximity of this pipeline to the maintenance yard area increases its chance of being influenced by stray current.

The pipeline is ten inches in diameter and has an extruded polypropylene coating. It is protected by a rectifier near Ducommun and First Streets. It is connected to a ten inch pipeline owned by Southern Pacific Pipeline Company at First Street on the east side of the Los Angeles River. These pipelines are electrically isolated with an insulating joint at this location.

Union also has two pipelines which should not be within the influence of the Metro Rail Project, but are nearby. These are a six inch and an eight inch pipeline in Venice Boulevard running east to La Brea Avenue. They continue in La Brea Avenue to the south to 29th Street where they continue to the east. Both of these pipelines are coated and receive approximately two amperes each of protective current from a bond to a rectifier owned by the Los Angeles Department of Water and Power, Power Division.

Union Oil Company has several corrosion engineers and technicians monitoring their pipelines. They use federal

regulations and National Association of Corrosion Engineers' recommended practices for evaluating their pipelines.

3.2.13 Union Pacific Railroad

Union Pacific Railroad has not been contacted at the request of the Southern California Rapid Transit District. However, it is known that they own or operate an oil well within the influence of the Metro Rail Project. This well is located near Santa Fe Avenue and Fourth Place, and probably has a steel pipeline associated with it.

3.3 Water Pipelines and Structures

3.3.1 Los Angeles Department of Water and Power - Water Division

The Los Angeles Department of Water and Power - Water Division is divided into five district. The Metro Rail Project will pass through three of these. They are the East Valley, Central and Western Districts. Each of these three districts has a large number of pipelines within the influence of the Metro Rail Project.

In almost every street that the Metro rail Project crosses or passes under the Water Division has a pipeline. These pipelines are listed in the index to utility substructure drawings. Generalizations can be made of the types of pipelines that are affected. Since corrosion control for the three affected districts within the Water Division is centrally supervised, conditions and procedures are the same or similar for the three districts.

Pipeline materials include cast iron, ductile iron, riveted steel, welded steel, concrete, reinforced concrete, pretensioned concrete and prestressed concrete. Service laterals are mostly copper, but some are galvanized steel which was installed 50 or more years ago.

The joints of their cast iron pipe are either caulked with lead or concrete, and are not bonded for electrical continuity. The joints of ductile iron pipe are rubber gasketed, and are not bonded for electrical continuity. Most concrete coated pipe which is less than ten years old has bonded joints for electrical continuity. Older concrete coated pipe may or may not have bonded joints for electrical continuity. Their prestressed concrete pipe has four horizontal bonding straps for electrical continuity across the prestressed reinforcing wires.

Their cast iron and ductile iron pipe generally has no coating. Welded steel pipe has either a bituminous coating or a bituminous coating with an outer coating of concrete. Bituminous coatings are factory tested for holidays or coating faults. However, they are not holiday tested in the field

after installation. Riveted steel pipe may or may not have bituminous coating.

Insulating joints are generally installed at connections between old and new pipelines. They have several different types of coatings over insulated flange joints. They have wire reinforced concrete, asphalt and fiberglass mat and coal tar. On factory assembled insulating flanges, they have enamel coating.

Generally cathodic protection is used only on their bituminous coated steel pipelines. With one exception, they do not have cathodic protection on concrete coated, cast iron or ductile iron pipelines. The one exception is that they install a magnesium anode at each leak location on cast iron and ductile iron pipe if it is determined that the leak was caused by external corrosion.

3.3.2 Los Angeles County Flood Control District

The Los Angeles County Flood Control District has several water drainage structures within the influence of the Metro Rail Project. Most of these structures are reinforced concrete box, storm drains. Since the steel reinforcing of each section of these drainage structures has been overlapped and connected, it is possible that electrical continuity exists through these structures. This would result in them having electrical characteristics similar to those of the pipeline. These structures do not have cathodic protection, and leaks would ordinarily not be detected since these structures are not pressurized.

These drainage structures cross or parallel the Metro Rail Project right-of-way at seven locations. They are at the following intersections:

(1) Fairfax Avenue and Orange Street

(2) Wilshire Boulevard and Orange Grove Avenue

(3) Wilshire Boulevard and Normandie Avenue

(4) Wilshire Boulevard and West Lake Avenue

(5) Hill Street and Second Street

(6) Second Street and the Los Angeles River

(7) Chandler Street and Tujunga Avenue

In addition, the Los Angeles County Flood Control District maintains the Los Angeles River flood control channel. This is constructed of reinforced concrete sections 122 feet by 142

feet. These sections of reinforcing steel are not electrically continuous to each other.

3.3.3 Metropolitan Water District

Metropolitan Water District has one pipeline which may be within the influence of the Metro Rail Project. It is located one block north of the Project right-of-way near Fairfax Avenue and Sunset Boulevard.

This pipeline is cast iron and is 32 inches in diameter. It is believed to have been installed in 1940. It does not have continuity bonds across its joints, but possibly has lead caulking in the joints which could cause partial electrical continuity. It does not have cathodic protection and is believed to have no coating. This pipeline has had no corrosion leaks to date.

Metropolitan Water District has two corrosion technicians to monitor their pipelines. They generally use standards such as those of the National Association of Corrosion Engineers to evaluate their pipelines.

3.3.4 Southern California Gas

GAS MAINS?

Southern California Gas Company operated chilled water and hot water pipelines that may be within the influence of the Metro Rail Project. These are each less than one block long and are generally only street crossings. They are located at the intersection of Flower Street and Third Street, and in Los Angeles Street between Sixth and Seventh Streets. They are coated with thermal insulation and do not have cathodic protection.

3.4 Cables

3.4.1 General Telephone

General Telephone has stated that they do not have any cables within the influence of the Metro Rail Project.

3.4.2 Los Angeles Department of Water and Power - Power Division

Los Angeles Department of Water and Power - Power Division has numerous metallic structures within the influence of the Metro Rail Project. The majority of these are lead sheath cables. They also have a short section of steel conduit. These cables and conduit are listed in the indices to utility substructure drawings.

Along the Metro Rail Project right-of-way from Fairfax Avenue to the Los Angeles River, they have lead sheath cables which are grounded and cannot be isolated. Higher voltage cables

are not grounded and are isolated; these have cathodic protection from sacrificial anodes.

There is also a 138 KV transmission line in Fairfax Avenue that has cathodic protection from rectifiers. The first is near the intersection of Fairfax Avenue and Rosewood Street, and operated at 1.4 amperes. The second is near Fairfax Avenue and Olympic Boulevard, and operates at 3.5 amperes. The third is at Oelongpre Avenue and Stanley Avenue, and is operating at 2 amperes. Also, in Fountain Avenue there is a section of steel pipe used as a conduit for a 230 KV transmission line. This pipe has an excellent bituminous coating and has sacrificial anodes for cathodic protection.

The Power Oivision has several corrosion technicians to monitor their facilities. They generally use standards such as those of the National Association of Corrosion Engineers to evaluate their cables and cathodic protection systems.

3.4.3 Pacific Telephone

Pacific Telephone Company has numerous cables which are located within the influence of the Metro Rail Project. These are listed in the indices to utility substructure drawings. Many of these are lead sheath cables, with a portion of them having cathodic protection provided by rectifiers or sacrificial anodes.

All Pacific Telephone Company underground lead cables are electrically continuous and isolated from above ground cables and other structures. Those with cathodic protection are tested at least annually and rectifiers are tested monthly.

Pacific Telephone has three corrosion technicians to monitor their facilities. They use standards outlined in Bell System Practice booklets. They use standards outlines in Bell System Practice booklets. This includes test procedures and recommended remedial actions for stray current corrosion. Their general criterion for effective cathodic protection is a cable voltage of from -0.7 to -0.8 volt as measured to a copper-copper sulfate reference electrode.

APPENDIX A

SOUTHERN CALIFORNIA RAPID TRANSIT DISTRICT

LISTING OF INTERSECTIONS INCLUDED IN

INDICES TO UTILITY DRAWINGS

Intersection	Page
Macy Street & Alameda Street	1
Sunset Blvd. & Main Street	3
Sunset Blvd. & North Spring Street	4
Sunset Blvd. & New High Street	5
Sunset Blvd. & Broadway	6
Hill Street & Santa Ana Freeway	7
Hill Street & Temple Street	8
Hill Street & First Street	10
Hill Street & Second Street	12
Hill Street & Third Street	13
Hill Street & Fourth Street	15
Hill Street & Fifth Street	17
Hill Street & Sixth Street	19
Seventh Street & Hill Street	21
Seventh Street & Olive Street	23
Seventh Street & Grand Avenue	25
Seventh Street & Hope Street	27
Seventh Street & Flower Street	28
Seventh Street & Lebanon Street	29
Seventh Street & Figueroa Street	30
Seventh Street & Francisco Street	32
Seventh Street & Harbour Freeway	33
Seventh Street & Bixel Street	34
Seventh Street & Lucas Avenue/Garland Avenue	35
Seventh Street & Hartford Avenue/Witmer Street	36
Seventh Street & Columbia Avenue	37
Seventh Street & Valencia Street	38
Seventh Street & Union Avenue	39
Seventh Street & Beacon Street/Little Street	40
Seventh Street & Burlington Avenue	41
Seventh Street & Bonnie Brae Street	42
Seventh Street & Westlake Avenue	43
Wilshire Blvd. & Alvarado Street	44
Wilshire Blvd. & Parkview Street	45
Wilshire Blvd. & Carondelet	46
Wilshire Blvd. & Coronada Street	47
Wilshire Blvd. & Rampart Blvd.	48
Wilshire Blvd. & Lafayette Park Place	49
Wilshire Blvd. & Hoover Street	50
Wilshire Blvd. & Commonwealth Avenue	51
Wilshire Blvd. & Virgil Avenue/Wilshire Place	52
Wilshire Blvd. & Westmoreland Avenue	53
Wilshire Blvd. & Shatto Place	54
Wilshire Blvd. & Vermont Avenue	55
Wilshire Blvd. & New Hampshire Street	56

SOUTHERN CALIFORNIA RAPID TRANSIT DISTRICT

LISTING OF INTERSECTIONS INCLUDED IN

INDICES TO UTILITY DRAWINGS

Intersection	Page
Wilshire Blvd. & Berendo Street	57
Wilshire Blvd. & Catalina Street	58
Wilshire Blvd. & Kenmore Avenue	59
Wilshire Blvd. & Alexandria Avenue	60
Wilshire Blvd. & South Mariposa Avenue	61
Wilshire Blvd. & North Mariposa Avenue	62
Wilshire Blvd. and Normandie Avenue	63
Wilshire Blvd. & Ardmore Avenue	65
Wilshire Blvd. & Kingsley Drive	66
Wilshire Blvd. & Harvard Blvd.	67
Wilshire Blvd. & Hobart Blvd.	68
Wilshire Blvd. & Serrano Avenue	69
Wilshire Blvd. & Oxford Avenue	70
Wilshire Blvd. & Western Avenue	71
Wilshire Blvd. & Manhattan Place	73
Wilshire Blvd. & St. Andrews Place	74
Wilshire Blvd. & Gramercy Place	75
Wilshire Blvd. & Wilton Place	76
Wilshire Blvd. & Van Ness Avenue	77
Wilshire Blvd. & Norton Avenue	78
Wilshire Blvd. & Bronson Avenue	79
Wilshire Blvd. & Crenshaw/Irving Blvd.	80
Wilshire Blvd. & Lorraine Blvd.	81
Wilshire Blvd. & Winsor Blvd.	82
Wilshire Blvd. & Plymouth Blvd.	83
Wilshire Blvd. & Lucerne Blvd.	84
Wilshire Blvd. & Fremont Place/Arden Blvd.	85
Wilshire Blvd. & Rossmore Avenue/Fremont West	86
Wilshire Blvd. & Muirfield Road	87
Wilshire Blvd. & Mullen Avenue	88
Wilshire Blvd. & Rimpau Blvd.	89
Wilshire Blvd. & Hudson Avenue	90
Wilshire Blvd. & June Street/Keniston Avenue	91
Wilshire Blvd. & Tremaine Avenue	92
Wilshire Blvd. & Longwood Avenue	93
Wilshire Blvd. & McCadden Place	94
Wilshire Blvd. & Highland Avenue	95
Wilshire Blvd. & Citrus Avenue	96
Wilshire Blvd. & Mansfield Avenue	97
Wilshire Blvd. & Orange Drive	98
Wilshire Blvd. & Sycamore Avenue	99
Wilshire Blvd. & La Brea Avenue	100
Wilshire Blvd. & Detroit St.	102
Wilshire Blvd. & Cloverdale Avenue	103

LISTING OF INTERSECTIONS INCLUDED IN

INDICES TO UTILITY DRAWINGS

Intersection	Page
Wilshire Blvd. & Cochran Avenue	104
Wilshire Blvd. & Dunsmuir Avenue	105
Wilshire Blvd. & Burnside Avenue	106
Wilshire Blvd. & Ridgeley Drive	107
Wilshire Blvd. & Hauser Avenue	108
Wilshire Blvd. & Masselin Avenue	109
Wilshire Blvd. & Sierra Bonita Avenue	110
Wilshire Blvd. & Curson Avenue	111
Wilshire Blvd. & Stanley Avenue	112
Wilshire Blvd. & Spaulding Avenue	113
Wilshire Blvd. & Ogden Drive	114
Wilshire Blvd. & Orange Grove	115
Fairfax Avenue & Wilshire Blvd.	116
Fairfax Avenue & Orange Street	117
Fairfax Avenue & Sixth Street	118
Fairfax Avenue & Linderhurst Avenue	119
Fairfax Avenue & Maryland Drive	120
Fairfax Avenue & Fifth Street	121
Fairfax Avenue & Drexel Avenue	122
Fairfax Avenue & Colgate Avenue	123
Fairfax Avenue & Fourth Street	124
Fairfax Avenue & Blackburn Avenue	125
Fairfax Avenue & Third Street	126
Fairfax Avenue & First Street	128
Fairfax Avenue & Beverly Blvd.	129
Fairfax Avenue & Oakwood Avenue	130
Fairfax Avenue & Rosewood Avenue	131
Fairfax Avenue & Clinton Street	132
Fairfax Avenue & Melrose Avenue	133
Fairfax Avenue & Waring Avenue	134
Fairfax Avenue & Willoughby Avenue	135
Fairfax Avenue & Romaine Street	136
Fairfax Avenue & Santa Monica State Hwy.	137
Fairfax Avenue & Norton Avenue	138
Fairfax Avenue & Fountain Avenue	139
Sunset Blvd. & Fairfax Avenue	141
Sunset Blvd. & Orange Grove Avenue	142
Sunset Blvd. & Ogden Drive	143
Sunset Blvd. & Genesse Avenue	144
Sunset Blvd. & Courtney Avenue	145
Sunset Blvd. & Stanley Avenue	146
Sunset Blvd. & Curson Avenue	147
Sunset Blvd. & Sierra Bonita Avenue	148
Sunset Blvd. & Gardner Street	149
Sunset Blvd. & Vista Street	150

LISTING OF INTERSECTIONS INCLUDED IN

INDICES TO UTILITY DRAWINGS

Intersection	Page
Sunset Blvd. & Martel Avenue	151
Sunset Blvd. & Fuller Avenue	152
Sunset Blvd. & Poinsetta Place	153
Sunset Blvd. & Formosa Avenue	154
Sunset Blvd. & Detroit Street	155
Sunset Blvd. & La Brea Avenue	156
Sunset Blvd. & Sycamore Avenue	15B
Sunset Blvd. & Orange Drive	159
Sunset Blvd. & Mansfield Avenue	160
Sunset Blvd. & Highland Avenue	161
Susnet Blvd. & McCadden Place	163
Sunset Blvd. & Las Palmas Avenue	165
Sunset Blvd. & Cherokee Avenue	166
Sunset Blvd. & Cassil Place	167
Sunset Blvd. & Seward Street	16B
Sunset Blvd. & Hudson Avenue	169
Sunset Blvd. & Wilcox Avenue	171
Sunset Blvd. & Cole Place	172
Cahuenga Blvd. & Sunset Blvd.	173
Cahuenga Blvd. & Selma Avenue	175
Cahuenga Blvd. & Hollywood Blvd.	176
Cahuenga Blvd. & Yucca Street	17B
Cahuenga Blvd. & Franklin Avenue	180
Lankershim Blvd. & Cahuenga Blvd. West/Ventura Blvd.	181
Lankershim Blvd. & Valley Heart Drive	183
Lankershim Blvd. & Willow Crest Avenue	184
Lankershim Blvd. & Chiquita Street	185
Lankershim Blvd. & Aqua Vista Street	186
Lankershim Blvd. & Acama Street	187
Lankershim Blvd. & Valley Spring Lane	188
Lankershim Blvd. & Whipple Street	189
Lankershim Blvd. & Woodbridge Street	190
Lankershim Blvd. & Broomfield Street	191
Lankershim Blvd. & Moorpark Street	192
Lankershim Blvd. & Landale Street	193
Lankershim Blvd. & Riverside Drive	194
Lankershim Blvd. & Riverside Freeway	195
Lankershim Blvd. & Hortense Street	196
Lankershim Blvd. & Kling Street	197
Lankershim Blvd. & Blix Street	19B
Lankershim Blvd. & Camarillo Street	199
Lankershim Blvd. & La Maida Street	200
Lankershim Blvd. & Huston Street	201
Lankershim Blvd. & Morrison Street	202
Lankershim Blvd. & Hesby Street	203

MTA LIBRARY

LISTING OF INTERSECTIONS INCLUDED IN

INDICES TO UTILITY DRAWINGS

Intersection	Page
Lankershim Blvd. & Otsego Street	204
Lankershim Blvd. & Hartsook Street	205
Lankershim Blvd. & Magnolia Blvd.	206
Lankershim Blvd. & McCormick Street	207
Lankershim Blvd. & Weddington Street	208
Lankershim Blvd. & Chandler Blvd.	209
Lankershim Blvd. & Cumpston Street	210
Lankershim Blvd. & Killion Street	211
Lankershim Blvd. & Burbank Blvd.	212

APPENDIX B

INDEX TO SOUTHERN CALIFORNIA GAS COMPANY

DRAWINGS FOR TRANSMISSION SYSTEM

SOUTH BASIN DIVISION

So. Calif. Gas Line No.	Location of MRP Intersection	Pipe Size	Sheet No.
1108	No crossing with M.R.P.	16"	6
1109	No crossing with M.R.P.	16"	6-7
1158	East of Turner Street Near Los Angeles River	16"	7
761	Wilshire Blvd. & Detroit St.	16"	22
750	No crossing with M.R.P.	22"	36
1105	Ogden Ave. to Formosa Ave. on Sunset Blvd.	16"	37

NORTH BASIN DIVISION

So. Calif. Gas Line No.	Location of MRP Intersection	Pipe Size	Sheet No.
3000	Camarillo St. & Lankershim Blvd.	30"	48

APPENDIX C

INDEX TO SOUTHERN CALIFORNIA GAS COMPANY

ATLAS DRAWINGS FOR DISTRIBUTION SYSTEM

METROPOLITAN DIVISION

Reference No.	SCG Sheet No.	Primary Street Shown	Crossing Street(s)
1	CEN 5-C	Macy Street	Alameda Street No. Spring Street
2	CEN 5	Macy St./Sunset St.	No. Spring Street Broadway Hill Street
3	CEN 15-A	Hill Street	Temple Street
4	CEN 14-B	Hill Street	Temple Street First Street
5	CEN 14-C	Hill Street	First Street Second Street
6	CEN 24-A	Hill Street	Fourth Street Fifth Street
7	CEN 24-D	Hill Street	Sixth Street Seventh Street
8	CEN 23-C	Seventh Street	Olive Grand
9	CEN 23-B	Seventh Street	Hope Street Flower Street Figueroa Street
10	CEN 23-A	Seventh Street	Francisco Street Harbor Fwy. Bixel Street

NORTHWEST DIVISION

Reference No.	SCG Sheet No.	Primary Street Shown	Crossing Street(s)
11	CEN 13	Seventh Street	Bixel Street Lucas Avenue
12	CEN 12	Seventh Street	Garland Avenue Hartford Avenue Witmer Street Columbia Avenue Valencia Street Union Avenue

NORTHWEST DIVISION (Continued)

Reference No.	SCG Sheet No.	Primary Street Shown	Crossing Street(s)
13	CEN 12-A	Seventh Street	Beacon Avenue Bonnie Brae Street Westlake Avenue Alvarado Street
14	CEN 2	Wilshire Blvd.	Alvarado Street
15	CEN 1-C	Wilshire Blvd.	Parkview Street Carondelet Street Coronado Street
16	CEN 1-B	Wilshire Blvd.	Coronado Street Rampart Blvd.
17	CEN 1-A	Wilshire Blvd.	Rampart Blvd. Benton Way Hoover Street Commonwealth Avenue Virgil Avenue Wilshire Place
18	ADA 10	Wilshire Blvd.	Wilshire Place Westmoreland Avenue Shatto Place Vermont Avenue New Hampshire Avenue Berendo Street Catalina Street Kenmore Avenue
19	ADA 9	Wilshire Blvd.	Mariposa Avenue Normandie Avenue Ardmore Avenue Kingsley Drive Harvard Blvd. Hobart Blvd. Serrano Avenue Oxford Avenue
20	ADA 8	Wilshire Blvd.	Oxford Avenue Western Avenue Manhattan Place St. Andrews Place Gramercy Place Wilton Place Van Ness Avenue Norton Avenue Bronson Avenue

NORTHWEST DIVISION (Continued)

Reference No.	SCG Sheet No.	Primary Street Shown	Crossing Street(s)
21	ADA 7	Wilshire Blvd.	Crenshaw Blvd. Lorraine Blvd. Windsor Blvd. Plymouth Blvd. Lucerne Blvd. Arden Blvd. Rossmore Avenue Muirfield Road
22	ADA 6	Wilshire Blvd.	Muirfield Road Rimpau Blvd. Hudson Avenue Keniston Avenue Tremaine Avenue McCadden Place Highland Avenue Citrus Avenue
23	HOL 115	Wilshire Blvd.	Citrus Avenue Mansfield Avenue Orange Drive Sycamore Avenue La Brea Avenue Detroit Street Cloverdale Avenue Cochran Avenue Dunsmuir Avenue Burnside Avenue Ridgeley Drive
24	HOL 114	Wilshire Blvd.	Ridgeley Drive Hauser Blvd. Masselin Avenue Sierra Bonita Avenue Curson Avenue Stanley Avenue Spaulding Avenue Genesse Avenue Ogden Avenue Orange Grove Avenue
25	HOL 113	Fairfax Avenue	Wilshire Blvd. Orange Street Sixth Street Lindenhurst Avenue Maryland Drive Fifth Street

NORTHWEST DIVISION (Continued)

Reference No.	SCG Sheet No.	Primary Street Shown	Crossing Street(s)
26	HOL 103	Fairfax Avenue	Drexel Avenue Colgate Avenue Fourth Street Blackburn Avenue Third Street
27	HOL 93	Fairfax Avenue	First Street Beverly Blvd. Oakwood Avenue
28	HOL 83	Fairfax Avenue	Rosewood Avenue Clinton Street Melrose Avenue
29	HOL 73	Fairfax Avenue	Waring Avenue Willoughby Avenue Romaine Street
30	HOL 63	Fairfax Avenue	Santa Monica Blvd. Norton Avenue Fountain Avenue
31	HOL 53	Fairfax Avenue	Sunset Blvd.
32	HOL 54	Sunset Blvd.	Orange Grove Avenue Ogden Drive Genesse Avenue Courtney Avenue Stanley Avenue Curson Avenue Sierra Bonita Avenue Gardner Street Vista Street Martel Avenue
33	HOL 55	Sunset Blvd.	Martel Avenue Fuller Avenue Poinsetta Place Alta Vista Blvd. Formosa Avenue Detroit Street La Brea Avenue Sycamore Avenue Orange Drive Mansfield Avenue

NORTHWEST DIVISION (Continued)

Reference No.	SCG Sheet No.	Primary Street Shown	Crossing Street(s)
34	HOL 56	Sunset Blvd.	Highland Avenue McCadden Place Las Palmas Cherokee Avenue Seward Street Hudson Avenue Wilcox Avenue Cole Avenue Cahuenga Blvd.
35	HOL 46	Cahuenga Blvd.	Hollywood Blvd. Yucca Street Franklin Avenue
36	HOL 36	Cahuenga Blvd.	Hollywood Fwy.
37	HOL 26	Along Hollywood Fwy.	

SAN FERNANDO VALLEY DIVISION

Reference No.	SCG Sheet No.	Primary Street Shown	Crossing Street(s)
38	1292	Cahuenga Blvd. & Hollywood Fwy Near Multiview	
39	1291	Lankershim Blvd.	Cahuenga Blvd. Hollywood Fwy
40	1298	Lankershim Blvd.	Valley Heart Drive
41	1297	Lankershim Blvd.	Willowcrest Avenue Chiquita Street Aqua Vista Street
42	1303	Lankershim Blvd.	Acama Street Valley Spring Lane Whipple Street Woodbridge Street Bloomfield Street Moorpark Street Landale Street

SAN FERNANDO VALLEY DIVISION (Continued)

Reference No.	SCG Sheet No.	Primary Street Shown	Crossing Street(s)
43	1309	Lankershim Blvd.	Riverside Drive Ventura Fwy. Hortense Street Kling Street Blix Street Vineland Avenue
44	1314	Lankershim Blvd.	Vineland Avenue La Maida Street Huston Street Morrison Street
45	1313	Lankershim Blvd.	Hesby Street Ostego Street Hartsook Street
46	1318	Lankershim Blvd.	Magnolia Blvd. McCormick Street Weddington Street Chandler Blvd.

TASK 3

COORDINATION

The requirements of this task were to meet with Project Staff, other SCRTD consultants and owners of potentially affected utilities and other facilities. Furthermore, the task description indicates that the present corrosion protection policies of each utility owner were to be described and that measures to control stray current corrosion were to be recommended. Meetings were held during the course of the contract, utility policies are presented in the Task 2 report and corrosion mitigation criteria are summarized in the Task 8 report. No final report for this task was required.

MTA LIBRARY

TASK 4

SOILS CORROSION STUDY

Table of Contents

Title			Page
1.	Introduction		4-1
2.	Conclusions		4-1
3.	Recommendations		4-2
4.	Discussion		4-5
Table I	-	Soil Corrosivity Versus Resistivity	4-6
Table II	-	Effect of Crack Width on Rebar Corrosion	4-8
Table III	-	Attack on Concrete by Soils and Waters Containing Various Sulfate Concentrations	4-10
Appendix 1	-	Water Quality Analysis - Bore Hole Samples	
2	-	Soil/Rock Chemical Analysis - Bore Hole Samples	
3	-	Soil Resistivities Along Revised Alignment	
4	-	Approximate Locations of Surface Soil Resistivity Measurements Along Revised Alignment	
5	-	Surface Soil Resistivities in the Vicinity of the Transit Yard	
6	-	Surface Soil Resistivity Test Site Locations and Comments	
Plate I	-	Water Resistivity and Soil Resistivities (0 to 100' and 100'+ Depths) vs. Distance	
Plate II	-	pH Water and Soil Samples (0 to 100' and 100'+ Depth) vs. Distance	
Plate III	-	Chloride Ion Concentrations, Water and Soil Samples (0 to 100' and 100'+ Depth) vs. Distance	
Plate IV	-	Sulfate Ion Concentration, Water and Soil Samples (0 to 100' and 100'+ Depth) vs. Distance	

4-i Plate V - Soil Resistivity vs. Probability
Along Revised SCRTD Alignment
Soil Borings All Depths

Plate VI - Soil Resistivity vs. Probability
Along Revised SCRTD Alignment
Soil Borings 0-100' Depths

Plate VII - Soil Resistivity vs. Probability
Along Revised SCRTD Alignment
Soil Borings Greater than 100' Depths

Plate VIIIA - Soil Resistivity vs. Probability
Along Revised SCRTD Alignment
Wenner Four-Pin Method - 2'-7" Depth

Plate VIIIB - Soil Resistivity vs. Probability
Along Revised SCRTD Alignment
Wenner Four-Pin Method - 5'-3" Depth

Plate VIIIC - Soil Resistivity vs. Probability
Along Revised SCRTD Alignment
Wenner Four-Pin Method - 7'-10" Depth

Plate VIIID - Soil Resistivity vs. Probability
Along Revised SCRTD Alignment
Wenner Four-Pin Method - 10'-6" Depth

Plate VIIIE - Soil Resistivity vs. Probability
Along Revised SCRTD Alignment
Wenner Four-Pin Method - 15'-8" Depth

Plate VIIIF - Soil Resistivity vs. Probability
Along Revised SCRTD Alignment
Wenner Four-Pin Method - 25'-0" Depth

Plate VIIIG - Soil Resistivity vs. Probability
Along Revised SCRTD Alignment
Wenner Four-Pin Method - 50'-0" Depth

Plate IX - Soil Resistivity vs. Probability
Along Revised SCRTD Alignment
Mean Value of Each Depth
(Plates XIIIA through G)

Plate X - Restivity vs. Extreme Value Probability
Along Revised SCRTD Alignment

Plate XIA - Soil Resistivity vs. Probability
Transit Yard Vicinity
Wenner Four-Pin Method - 2'-7" Depth

Plate XIB - Soil Resistivity vs. Probability
Transit Yard Vicinity
Wenner Four-Pin Method - 5'-3" Depth

Plate XIC - Soil Resistivity vs. Probability
Transit Yard Vicinity
Wenner Four-Pin Method - 7'-10" Depth

Plate XID - Soil Resistivity vs. Probability
Transit Yard Vicinity
Wenner Four-Pin Method - 10'-6" Depth

Plate XIE - Soil Resistivity vs. Probability
Transit Yard Vicinity
Wenner Four-Pin Method - 15'-8" Depth

Plate XIF - Soil Resistivity vs. Probability
Transit Yard Vicinity
Wenner Four-Pin Method - 25'-0" Depth

Plate XIG - Soil Resistivity vs. Probability
Transit Yard Vicinity
Wenner Four-Pin Method - 50'-0" Depth

Plate XII - Soil Resistivity vs. Probability
Transit Yard Vicinity
Mean Value at Each Depth
(Plates XIA through G)

Plate XIII - Resistivity vs. Extreme Value Probability
Transit Yard Vicinity

Plate XIV - Mean Resistivity vs. Depth
Alignment and Transit Yard Vicinity

1. INTRODUCTION

A project of the magnitude and type of construction proposed for the Los Angeles Rapid Transit System requires careful evaluation of the environmental conditions associated with its construction. Since essentially all of the structures will be underground and/or with substantial in earth foundations, the effects of the surrounding soils and ground waters are of vital importance.

Soils and/or ground water can create severe short and long term detrimental effects on underground metallic and concrete structures. The corrosive effects created can result in rapid failures and/or in the long term more gradual deterioration of the structures. Therefore, an evaluation of the corrosiveness of the soils and ground waters prior to construction is imperative to determine what construction materials should be used or what preventative measures are necessary in the construction.

As a general rule, any attempt to correct conditions subsequent to construction will be very expensive, especially after the transit system is put in operation. It is wise, therefore, to anticipate corrosion problems and make the necessary design modifications for inclusion in the initial construction. Our recommendations on corrosion control measures for facilities covered in this report are based on this premise. A 100 year operating life is the criterion unless specifically stated otherwise.

2. CONCLUSIONS

The significant conclusions of this study are as follows:

2.1 METALLIC STRUCTURES

2.1.1 The soil corrosion conditions relating to metallic facilities vary from mildly corrosive to very corrosive along the route of the transit system. As a general statement, more severe corrosion conditions exist at the greater depths, especially within the ground water zones.

2.1.2 Standard wall thickness pressure piping of steel and ductile iron can be expected to have failures within the 20 to 30 year period if no protective measures are included in the construction of these facilities. Since the corrosive conditions vary along the alignment, it would be meaningful to specify different corrosion control measures for pressure piping at different locations. However, because of the relatively small amount of piping involved, it is more practical to establish

standard measures throughout the project. The one possible exception to this is the transit yard area.

2.1.3 Metallic non-pressured piping (such as water drainage conduits) and electrical conduits will experience significant corrosion and failures over the life of the transit system if special corrosion control measures are not taken. As a general statement, non-metallic piping and conduit should be used if possible from a mechanical standpoint. Protective coatings and possibly supplemental cathodic protection will be required for metallic direct burial drainage piping and electrical conduits throughout the project.

2.1.4 Direct burial of metallic piping or other metallic facilities at other than normal utility depths will in general be subject to severe corrosive conditions and are likely to require costly maintenance in the future. Direct burial below 10 feet should be avoided where possible.

2.2 CONCRETE STUCTURES

2.2.1 Concrete structures will suffer significant deterioration to the cement and/or the reinforcement throughout the alignment if special precautions are not undertaken at the time of construction.

2.2.2 The deterioration from sulfates will range from negligible to severe with extensive lengths from positive to severe. Sulfate resistant cements of Type II or V (or equivalent sulfate resistance) are required throughout the project.

2.2.3 Concrete deterioration from acidic (low pH) soil or ground water will be significant within the area from Union Station to Wilshire and Fairfax. Protective coatings will be required on some concrete structures within this area, and possibly at other areas, depending on the type of construction; the main consideration is the wall thickness and the concrete cover over the reinforcement.

2.2.4 Deterioration of concrete structures from chloride attack on reinforcement will be a significant problem within the area from Union Station to Wilshire and Fairfax, especially where the structure is located within the ground water zone. The facilities within this area require special consideration regarding concrete density, concrete cover over reinforcement and protective coating, depending on the nature of the structure involved.

3. RECOMMENDATIONS

3.1 STEEL PRESSURE PIPING

All buried steel pressure piping throughout the project shall have special corrosion control measures consisting of:

MTA LIBRARY

a. Application of high quality protective coating such as an extruded polyethylene or coal tar epoxy.

b. Electrical insulation of the piping from other facilities through the use of insulating joints and wall sleeves.

c. Establishing electrical continuity of the piping by the installation of bond wires across all non-welded mechanical pipe joints, other than insulating joints.

d. Installation of cathodic protection systems, either sacrificial or impressed current anodes and rectifier units as required.

e. Piping to or from deep tunnels or station structures should be placed within vent shafts or other structures rather than being buried directly.

3.2 DUCTILE AND CAST IRON BURIED PRESSURE PIPING

3.2.1 All buried ductile iron or cast iron pressure piping shall have the same corrosion control measures as required for steel pressure piping in 3.1 above.

3.2.3 Transit Yard Piping

This piping will require special consideration because of stray current conditions. The preferred piping material will be non-metallic, such as PVC or polyethylene. If metallic piping must be used, a detailed site survey of soil conditions must be conducted when access to the site is possible and a stray current/cathodic protection system must be designed.

3.3 NON-METALLIC PIPING

Wherever possible, non-metallic piping such as fiber glass reinforced plastic, PVC or polyethylene should be substituted for metallic pressure piping to eliminate the need for extensive corrosion control measures. This is especially true for shallow depth installations.

3.4 PRECAST TUNNEL LINER SEGMENTS

The precast concrete tunnel liner segments shall be constructed of Type V sulfate resistant cement as a minimum. The concrete shall be of low permeability through the use of a low water/cement ratio of .37 by weight. Chloride in mix water shall not exceed 200 ppm. Chloride containing admixtures shall be avoided if possible. Concrete shall have small aggregate and be well vibrated free of significant air voids. A protective coating such as coal tar epoxy shall be applied to the earth side face of the precast concrete tunnel segments.

3.5 CAST IN PLACE CONCRETE

The portions of underground reinforced concrete structures south and east of Wilshire and Fairfax which will be in contact with the earth, such as passenger stations and vent shafts, shall be constructed of Type V sulfate resistant cement. Structures north and west of this intersection shall be constructed of Type II sulfate resistance cement. Cast in place concrete structures poured in a form shall have a minimum of 2-inches of dense concrete cover over the reinforcement. Where concrete is poured directly against the earth, a minimum of 3" of cover is required. Protective coatings are required south and east of Wilshire and Fairfax and any area where soils and/or ground water have a pH less than or equal to 5.0 or a chloride concentration greater than or equal to 350 ppm.

3.6 BURIED REINFORCED CONCRETE OR PRESTRESSED CONCRETE PIPE

This pipe shall use a minimum Type II sulfate resistant cement and Type V in those areas where sulfate concentrations in the ground water exceed 1,000 ppm or 2,000 ppm in the soil. Protective coatings such as coal tar epoxy, polyamide and polyamine epoxies and polyurethanes shall be used on all external surfaces.

3.7 WELDED STEEL TUNNEL SEGMENT LINER

No special corrosion control measures are required for the external surfaces of the welded steel liner proposed for the interior of the concrete lined tunnel segments located in areas subject to oil or gas seepage. The proposed installation of sulfate resistant cement grout between the steel and concrete liners will provide adequate corrosion protection to the steel. The surface of the steel liner exposed to the tunnel interior shall be treated in accordance with the recommendations for atmospheric corrosion.

3.8 SUPPORT PILINGS

3.8.1 Tunnel/Passenger Station Depths:

Support pilings, if required, should be of a steel shell type, with an internal filling of reinforced concrete, with the reinforced concrete providing the primary support.

3.8.2 At-Grade Structures:

Support pilings will require analysis of soil conditions at the individual locations to determine corrosion control requirements for the specific piling proposed.

3.9 NON-PRESSURE PIPING AND ELECTRICAL CONDUITS

Polyethylene, PVC or other non-metallic material is recommended for use for all direct burial non-pressure drainage piping and electrical conduits. Aluminum or aluminum alloys shall not be used for direct burial either in soils or concrete throughout the area.

3.10 ELEVATOR HYDRAULIC CYLINDERS

The steel hydraulic cylinders shall have special corrosion control measures consisting of protective coating on the external surface of the cylinder, a fiberglass reinforced plastic (FRP) casing and an external steel casing with high resistivity silica sand fill between the cylinder and the FRP casing and sacrificial anodes in the sand fill.

4. DISCUSSION

The corrosiveness of the soils and ground waters associated with the proposed route of the SCRTD Metro Rail System in the Los Angeles area were evaluated by means of a laboratory analysis of soil boring samples. Note that the soil boring data in this report reflects the latest alignment revision. Data at locations which are no longer consistent with the revised alignment, presented in previous drafts, were eliminated for purposes of plotting the laboratory results.

In addition to laboratory analyses of soil boring samples, detailed surveys of resistivity along the alignment and in the vicinity of the transit yard were made from the surface. For purposes of this discussion, however, all the data from the laboratory analysis are discussed first with a discussion of surface resistivity data to follow.

4.1 ANALYSIS OF SOIL BORING SAMPLES

Soil and ground water samples were analyzed for resistivity, pH, chloride ions and sulfate ions. These parameters are indicators of the relative corrosivity of the environment to buried metallic and concrete structures.

4.1.1 Soil Boring Sample Resistivity

The measurement of soil resistivity has been used by corrosion engineers for many years as an indicator of the corrosivity of an environment. Although no standard has been developed nor accepted by such organizations as the American Society for Testing and Materials and the National Association of Corrosion Engineers, it is widely agreed that the classifications in Table I below, or similar groupings, reflect soil corrosivity.

Table I

Soil Corrosivity Versus Resistivity

Ohm-cm	Description
below 500	very corrosive
500 to 1,000	corrosive
1,000 to 2,000	moderately corrosive
2,000 to 10,000	mildly corrosive
above 10,000	progressively less corrosive

Table I provides a qualitative insight to the expected rate of corrosion of a metallic structure in a soil of a known resistivity. Accordingly, deterioration can generally be expected to be rapid and relatively severe in soil below 1,000 ohm-cm. This does not mean, however, that severe corrosion will not occur in soils of higher resistivities. In fact, depending on the conditions, corrosion can occur in soils above 10,000 ohm-cm. Table 1 only indicates that this occurrence is generally not observed.

Not only are local resistivities useful in predicting corrosion rates but so is the change in resistivity along an electrically continuous structure. Many structures along the transit alignment will be electrically continuous so that they become susceptible to long line galvanic influences arising from variations in soil resistivity. The sections of the structure in the lower resistivity environments tend to become anodic (corrode) relative to other sections of the same structure. It is important, therefore, to determine trends in soil resistivities with distance along the proposed alignment.

Plate I, Water and Soil Resistivities vs. Distance, is a graph of the resistivity of water samples and soil samples obtained from bore holes along the proposed route of the transit system. The soil sample resistivities have been divided into two groups, soils of a depth of 0 to 100 feet and a depth in excess of 100 feet. This plate shows that water resistivities range from very corrosive levels (33 ohm-cm) to moderately corrosive levels (1,500 ohm-cm). The water sample data on Plate 1 are taken from the water quality analysis reports attached as Appendix 1.

Resistivities of 59 soil samples from bore holes ranged from 72 to 15,400 ohm-cm with a mean of 940 ohm-cm and with approximately 51.5% of the values below 1,000 ohm-cm. Samples from depths between 0 and 100 feet had a mean of 1,000 ohm-cm with approximately 50% of the values below 1,000 ohm-cm. Samples from depths between 100 and 200 feet had a mean of 710 ohm-cm with approximately 60% of the values below 1,000 ohm-cm. These data and selected chemical concentrations are

tabulated in the Soil/Rock Chemical Analysis reports attached as Appendix 2.

It can be concluded from Plate 1 that severely corrosive soils and ground waters may be expected at numerous locations. Corrosive soils are present at sufficient locations throughout the proposed route of the transit system to warrant special corrosion control measures for buried steel pressure piping.

4.1.2 Soil pH

Plate II, Water and Soil Sample pH Versus Distance, is a graph of the pH values obtained from the same samples used to develop Plate I. Water sample pH is, in general, within the relatively narrow range of 7.0 to 8.0 with occasional more basic values to 9.0. These pH values do not indicate a particularly corrosive environment. However, the soil pH exhibits a wide range of values from very acidic (2.6) to neutral (7.3). The low pH areas will be very corrosive to buried metallic structures.

4.1.3 Chloride Environments

Plate III, Chloride Ion Concentrations vs. Distance - Water and Soil Samples, is a graph of the chloride ion concentrations measured for water and soil samples obtained from the geotechnical bore holes. This graph shows chloride concentrations ranging from 34 ppm to 12,255 ppm in the water samples and from 21 to 5110 ppm for the soil samples.

A critical value of chloride concentration relative to the corrosion of reinforcing steel within concrete structures has not been clearly established. The most important aspect of this corrosion mechanism, however, is that chlorides penetrate into the concrete and eventually contact the reinforcing steel causing accelerated corrosion. The presence of cracks in the concrete structures or the use of a highly porous concrete promote this mechanism. An indication of the effect of crack width on the corrosion of reinforcing steel is given in Table II below. These data are from E. Phillips, Survey of Corrosion of Prestressing Steel in Concrete Water Retaining Structures, Australian Water Resources Council, 1975.

Table II

Effect of Crack Width on Rebar Corrosion

Width	Effect
.004" or less	no corrosion in a chloride environment
.004"-.01"	corrosion initiates
.01" or greater	corrosion will definitely occur

Since the corrosion mechanism is time dependent, even the presence of microcracks in the concrete structure exposed to a chloride environment will lead to corrosion of the reinforcing steel over a long time period.

Insofar as the critical value of chloride concentration is concerned, review of available literature and practical experience indicate concentrations of 350 ppm chloride in the mixing water or 550 ppm in soils and ground waters have caused corrosion of reinforcing steel. Since chloride concentrations along the right-of-way exceed these levels, certain measures are required, relative to concrete quality to insure adequate life of reinforced concrete structures. These measures, which are directed toward reducing the penetration of chlorides into concrete structures, should include the following:

a. Specification of a low permeability concrete through the use of a water/cement ratio of at least .45 by weight. Permeability will increase rapidly above .45, thus increasing chloride attack.

b. Control of chlorides in the mixing water such that they do not exceed 200 ppm. Avoid chloride containing admixtures if possible.

c. Establishment of field procedures to insure a well vibrated concrete free of significant air voids.

d. Require a minimum of two inches of concrete cover over the reinforcing steel on all form-poured structures exposed to the soil environment. If the structure is poured directly against the earth, a minimum of three inches of cover should be required.

Even though the above measures are taken, an additional corrosion protection requirement is recommended for reinforced concrete structures. The application of protective coatings

to the concrete surfaces exposed to high chloride environments or low pH is recommended.

4.1.4 Sulfate Environments

Plate IV, Sulfate Ion Concentrations vs. Distance - Water and Soil Samples, is a graph of the sulfate ion measured for the bore hole water and soil samples. This graph shows the sulfate ion concentration ranging from 5 to 2,600 ppm in the water samples and from 14 to 27,000 ppm in the soil samples. A review of the literature on the corrosion characteristics of concrete structures indicates a wide range of values have been suggested as the critical sulfate concentration above which severe sulfate attack will occur. Since the severity of the damage is highly dependent upon the porosity of the concrete, a concentration of 100 ppm would be detrimental to a porous cement while a concentration of as much as 600 ppm would have no effect on dense or well compacted concrete.

It must be noted that the critical value applies to concrete exposed to unconfined ground waters. Concrete buried in soils may withstand higher concentrations of sulfates with no significant deterioration. There is some general agreement among the experts in this field that concrete exposed to an environment with sulfate concentrations of 400 ppm or greater could require corrosion control considerations.

Insofar as guidelines or specifications are concerned, the Concrete Manual, United States Department of the Interior, Bureau of Reclamation, 1963, has established the following table for critical sulfate values.

Table III*

Attack on Concrete by Soils and Waters Containing Various Sulfate Concentrations

Relative Degree of Sulfate Attack	Percent Water Soluble Sulfate (as SO_4) in Soil Samples	ppm Sulfate (as SO_4 in H_2O Samples
Negligible	000 to 0.10	0 to 150
Positive[1]	0.10 to 0.20	150 to 1000
Considerable[2]	0.20 to 0.50	1000 to 2000
Severe[2]	over 0.50	over 2000

Note: In the USA and GB the corrosion of concrete by waters and soils is estimated only on the basis of its sulfate content.

1. Use Type II cement.
2. Use Type V cement.

*(Table 2 in Concrete Manual, United States Department of the Interior, Bureau of Reclamation, Seventh Edition, 1963, page 12)

Sulfate ion concentrations in excess of 150 ppm occur to a large extent throughout the proposed transit system route. Plate IV shows the areas for which Type II and Type V sulfate resistant cement is recommended.

4.2 SURFACE SOIL RESISTIVITY SURVEY

In addition to the soil boring resistivity data, resistivities were also measured using the Wenner four-pin surface technique as discussed below. The Wenner four-pin method is described in the ASTM Standard G57-78. Measurements were made at 71 locations along the alignment and at 22 locations in the vicinity of the transit yard. No soil resistivity data within the transit yard area itself were taken due to access problems. Measurements at seven depths; i.e., 2'-7", 5'-5", 7'-10", 10'-6", 15'-8", 25'-0" and 50'-0, were made at selected locations.

4.2.1 Alignment Survey

The data along the alignment are tabulated in Appendix 3. The approximate location of these sites are shown on area maps in Appendix 4. The locations are described and pertinent comments on these locations are given in Appendix 5.

Plates VIIIA through VIIIG are plots of soil resistivities versus probability of occurrence for all Wenner four-pin data at each respective depth. Plate VIIIA, for example, plots the data at a depth of 2'-7". On each plot the mean value of

resistivity and the percentage of readings at less than 1,000 ohm-cm are indicated. All the mean values for each depth are plotted in Plate IX. From Plate IX it can be seen that the overall average mean is 1,350 ohm-cm and that 24% of all soils along the alignment are below 1,000 ohm-cm. Another way of interpreting the data is shown on Plate X which is an extreme value plot of the lowest resistivities measured at each location. This plot indicates that there is an 83% probability that corrosive soils (below 1,000 ohm-cm) will be found at any location if depths to 50 feet are sampled. These data support the conclusion that corrosion protection measured must be taken for buried metallic structures along the transit alignment.

4.2.2 Transit Yard Survey

Similar plots of soil resistivity versus probability for the data taken in the vicinity of the transit yard at seven depths are given in Plates XIA through XIG. The mean values at all depths are plotted in Plate XII. The overall mean in this area is 11,000 ohm-cm with less than 2% of all soils below 1,000 ohm-cm. An extreme value analysis, shown in Plate XIII, projects a 20% probability of encountering corrosive soil (less than 1,000 ohm-cm) at any location if depths to 50 feet are sampled. Clearly the environment, from the standpoint of resistivity data, is less corrosive in the transit yard area than it is along the alignment.

4.3 DISCUSSION OF SOIL CORROSIVITY

A detailed analysis of soil corrosivity, considering all of the above data, was made. Comments and conclusions are as follows:

4.3.1 Soil Boring Sample Analyses

The analysis of the soil and ground water data as shown on Plates I through IV show that from the east Portal to Fairfax Avenue and Wilshire Boulevard, the corrosive effects of water and soils are more severe than for the remainder of the transit route to the North Hollywood portal. The soil resistivities in this eastern leg range from a low of 72 ohm-cm to 15,400 ohm-cm with a pH range from 2.6 to 7.3. Chloride ion concentrations range from less than 21 to 5,110 ppm for the soils and from 49 to 12,255 ppm for the ground water samples. Sulfate concentrations range from 57 to 27,000 ppm for soils and 5 to 2,480 ppm for the waters.

From Fairfax Avenue and Wilshire Boulevard to the North Hollywood portal the plates show that soil resistivities range from 250 to 10,000 ohm-cm; however, all but two readings are above 2,000 ohm-cm indicating that soil conditions are only mildly corrosive. Water resistivities are on the order of 1,000 ohm-cm which is considered corrosive to mildly corrosive. Chloride concentrations in the soils in this area

are less than 200 ppm. Sulfates in the soil are generally less than 200 ppm with only two locations with higher concentrations. Chloride and sulfate concentrations in the ground waters average 100 ppm or less for chlorides and 335 ppm for sulfates. The occurrence of the higher levels of sulfate and chloride ions in the area from Fairfax Avenue and Wilshire Boulevard to the east portal is probably related to the petroleum deposits prevalent throughout this area.

The low resistivities associated with both the soils and ground water together with the substantial levels of chloride and sulfate ion concentrations present severely corrosive conditions for not only iron and steel structures but also for underground concrete structures. Special corrosion control measures such as protective coatings and cathodic protection are required and have been recommended for underground iron and steel pressure piping in this environment. As a result of the high sulfate and chloride ion concentrations special measures will be required to provide control of corrosion of concrete structures. These special measures include the use of Type II sulfate resistant cement for all concrete structures north and west of Fairfax and Wilshire and the use of Type V cement for all concrete structures south and east of this intersection. In areas where concrete will be exposed to acidic waters and/or high chloride concentrations, protective coatings such as coal tar epoxy, polyamide and polyamine epoxies or polyurethane will be required on the concrete surfaces exposed to the waters or soils to prevent the penetration of chlorides to the reinforcing steel.

4.3.2 Surface Soil Resistivity Analysis

From the surface soil resistivity data along the alignment it can be concluded that severe corrosive conditions will exist at several locations. Accordingly, cathodic protection of all buried metallic pressure piping will be required. A summary of the minimum, maximum and mean resistivities at all depths measured for alignment and transit yard area is shown in Table IV. It can be also seen that corrosive conditions tend to become more severe with depth. For this reason piping to be installed for service to the deep tunnel or station structures should be placed inside shafts, tunnels or station structures rather than directly in the soil. The placing of piping inside structures not only reduces the likelihood of corrosion deterioration but also permits the repair or replacement at nominal cost without possible catastrophic effects.

MTA LIBRARY

TABLE IV

SOIL RESISTIVITY (OHM-CM)

WENNER FOUR PIN SUMMARY

	Alignment			Transit Yard		
Depth	Min	Max	Mean	Min	Max	Mean
2'7"	594	65,796	2,120	1,892	428,194	29,000
5'3"	447	45,543	1,900	2,182	97,943	20,500
7'10"	308	34,352	1,550	1,867	100,825	11,200
10'6"	124	26,743	1,400	1,237	341,828	13,000
15'8"	19	15,151	1,200	962	3,382,369	8,400
25'	29	10,916	600	127	33,513	5,800
50'	48	6,329	100	268	29,938	350
Mean of all depths			1,350			11,000

Soil resistivities measurements obtained in the vicinity of the proposed transit yard (Santa Fe Railroad Yard adjacent to Union Station) indicate that soil in this area above 25 feet is much less corrosive than soil along the alignment. It is possible, however, that this may not be the case in the yard proper. No conclusions can be made regarding corrosive soil conditions in the yard until access is approved for further soil studies. Nevertheless, if the actual yard values are similar to the data reported here, a desirable situation from the standpoint of stray current generation will result. Typically, the yard and maintenance shop area would be a major source of stray current. If the yard is located in a high soil resistivity area, stray currents from this source could be reduced proportionately.

A plot of mean soil resistivities with increasing depth for both the alignment and transit yard data is shown in Plate XIV. This plot illustrates the general increase in corrosivity with depth and shows the relative difference in resistivity values between the alignment and transit yard area.

4.4 PRECAST TUNNEL SEGMENTS

The proposed construction of the tunnels, except through the Santa Monica Mountain area, is to be by precast concrete liner segments. The tunnel section through the mountains is to be cement grout applied to the tunnel rock surfaces. In order to ensure an

extended service life for the precast concrete tunnel liner segments they should be constructed of Type V sulfate resistant cement with a high density to prevent the penetration of sulfate and/or chloride bearing waters. The application of protective coatings to the external surface of the segments is also required to minimize concrete deterioration by high chloride ion concentrations or low pH values. More specific design criteria for concrete tunnel segments are presented in the discussion entitled "Corrosion Control Design Criteria and Specifications".

The tunnel sections containing the welded steel liner for the prevention of oil and/or gas penetration into the tunnels will not require corrosion control measures other than those recommended for the precast concrete liners in general. The use of a sulfate resistant cement grout between the steel liner and the concrete liner segments will provide adequate corrosion protection. The surface of the steel liner exposed in the interior of the tunnel shall be treated as recommended under the atmospheric corrosion control recommendations.

4.5 CONCRETE PIPE

Buried reinforced concrete or prestressed concrete pipe will be subjected to the effects of sulfates and chlorides in the same manner as other concrete structures. The pipe shall be constructed of a minimum Type II sulfate resistant cement. Type V shall be used in those areas where sulfate concentrations in the soil are greater than 2,000 ppm or where the ground water sulfates exceed 1,000 ppm. In order to prevent the penetration of chlorides to the reinforcing and to prevent the depletion of the alkaline environment at the concrete/rebar interface, protective coatings shall be applied to the external surface of the pipe in areas of high chloride concentrations and/or low pH. The type of coating required varies depending on whether the pipe is used for a pressure system or not. Detailed coating requirements are presented in the "Criteria and Specifications" task of the corrosion report.

4.6 SUPPORT PILINGS

Support pilings located deep in the earth, i.e., for tunnels and passenger station supports, will be located in relatively undisturbed earth. These will be less likely to incur severe deterioration. In this case the use of steel pipe shells with reinforced concrete fill with the concrete providing the primary support will provide the most effective support system. Where support systems are required at grade level structures, an analysis of soil conditions should be made at the individual locations so that the most approximate piling system can be determined. In any case, all concrete supports located south and east of Wilshire and Fairfax shall use Type V sulfate resistance cement. At all other locations Type II cement is required.

4.7 ELEVATORS

In view of the present practice of installing elevators for the handicapped, consideration must be given to corrosion control measures for hydraulic cylinder type systems. In most cases, the steel hydraulic cylinders will extend into the earth below structures. These could be subject to soil corrosion and possibly stray current corrosive effects. To ensure an extended life for the hydraulic cylinder, the cylinder should be well coated. The cylinder should be cased with an intermediate FRP casing and an outer steel casing. The space between the two casings and between the cylinder and the RFP casing should be filled with clean sand. Cathodic protection of the cylinder by means of sacrificial anodes between the cylinder and the FRP casing should be provided. This arrangement will eliminate the reaction of soils or ground water on the steel cylinder and also eliminate the detrimental effects which might be caused by the exchange of stray direct current between the cylinder and earth.

4.8 NON-METALLIC MATERIALS

As a further deterrent to corrosion failures on the proposed transit system, consideration should be given to the use of materials highly resistant to corrosion wherever possible. Materials such as polyethylene, PVC or other non-metallics are commonly used for the direct burial of non-pressure drainage piping and electrical conduits. The use of these materials will substantially reduce corrosion and maintenance costs.

5. APPENDICES

Appendices attached contain copies of the Water Quality Analyses and the Soil/Rock Chemical Analyses conducted by Converse Consultants - Jacobs Laboratories. They also contain surface soil resistivity data obtained by Villalobos and Associates, Inc. along the revised alignment and in the vicinity of the proposed transit yard. The appendix includes:

Appendix 1. Water Quality Analysis - Bore Hole Samples

Appendix 2. Soil/Rock Chemical Analysis - Bore Hole Samples

Appendix 3. Soil Resistivities Along Revised Alignment

Appendix 4. Approximate Locations of Surface Soil Resistivity Measurements Along Revised Alignment

Appendix 5. Surface Soil Resistivities in the Vicinity of the Transit Yard

Appendix 6. Surface Soil Resistivity Test Site Locations and Comments

APPENDIX 1

WATER QUALITY ANALYSIS - BORE HOLE SAMPLES

(SCRTD)

ConverseWardDavisDixon
Earth Sciences Associates
Geo/Resource Consultants

Jacobs Laboratories

Water Quality

April 6, 1981

Converse Ward Davis Dixon
126 W. Del Mar Blvd.
P.O. Box 2268D
Pasadena, CA 91105

Attention: Buzz Spellman

Lab No. P81-02-123
P81-02-142
P81-02-159
P81-02-186
P81-03-017

Report of Chemical Analysis

The enclosed analytical results are for thirty (30) samples of ground water received by this laboratory on February 12, 17, 18, 20 and March 3, 1981. The samples were collected and delivered by Converse, Ward, Davis, Dixon personnel.

Cation/Anion balance was not acheived on many of the samples due to the presence of an unmeasured cation, probably aluminum or barium. This fact is reflected in the large difference between the milliequivalents of total hardness, (Milligrams $CaCO_3$/l ÷ 50 = milliequivalents) and the summed milliequivalents of calcium and magnesium. These samples balance electrically using the total hardness in place of the calcium and magnesium. This indicates a cation (or cations) was not measured. The most common ions are aluminum and barium. If you so desired, we may analyze these samples for the missing element(s).

Respectfully submitted,

William, R. Ray
Manager, Water Laboratory

asl

MTA LIBRARY

TABLE G-1 Selected Water Quality Parameters

Boring No.	PVC Diam. (in.)	Depth Water Sampled (ft)	Date Sampled	pH @ 25° C	Total Dissolved Solids (ppm)	Sulfate SO_4 (ppm)	Boron, B (ppm)	Possible Water Type & Comments
1	2	25.5	02-19-81	7.9	1,258	475	0.98	Na/HCO_3
2	2	11.0	02-19-81	7.7	412	57	0.90	Na/HCO_3
3	2	33.0	02-19-81	7.0	3,722	152	5.0	Na/Cl
4	2	30.0	02-19-81	7.6	5,085	79	7.0	Na/Cl
6	2	19.0	02-20-81	7.5	20,230	27	38.0	Na/Cl - oil field brine?
9	2	105.5	02-23-81	7.7	485	82	0.74	Na/HCO_3
10	1	23.0	02-23-81	7.4	4,461	2,200	2.44	Ca/SO_4
11	2	-*	02-02-81	7.2	19,670	5	37.5	Na/Cl - artesian oil field brine?
12	2	20.0	02-18-81	7.5	6,038	40	14.0	Na/Cl
14	2	24.0	02-18-81	7.9	677	67	0.22	Na/HCO_3
16	1	35.0	02-18-81	7.4	1,139	231	0.14	Na/HCO_3
16	2	40.0	02-18-81	7.5	6,926	25	10.0	Na/Cl
17	2	25.5	02-18-81	7.6	795	87	0.12	Na/HCO_3
19	2	32.0	02-20-81	7.0	15,425	240	10.5	Na/Cl - oil field brine?
21	3/4	19.0	01-07-81	7.6	867	263	0.58	Na/HCO_3
21	2	19.0	01-07-81	7.4	1,448	67	1.74	Na/Cl
22	3/4	16.2	02-16-81	8.0	718	149	0.24	Na/HCO_3
22	2	18.3	02-16-81	7.7	779	124	0.42	Na/HCO_3
23	2	7.5	02-13-81	7.5	589	6	0.22	Na/HCO_3
23A	2	20.0	02-20-81	7.7	863	154	0.38	Na/HCO_3
25	2	109.0	02-13-81	7.6	494	65	0.12	Na/HCO_3
26	1	31.0	02-12-81	7.4	660	161	0.20	Na/HCO_3
27	2	27.5	02-13-81	7.8	725	245	0.32	Na/HCO_3
28A	2	30.0	03-19-81	7.8	805	272	1.16	Na/HCO_3
29	2	84.5	02-25-81	8.0	5,996	2,600	2.6	Na/SO_4
30	2	21.1	03-19-81	7.9	620	202	1.14	Na/HCO_3
31	2	28.7	03-02-81	8.6	511	161	0.58	Na/HCO_3 - Topanga Sandstone & Basalt

* Flowing at rate of 0.75 gpm at time of sampling.

TABLE G-1 Selected Water Quality Parameters (continued)

Boring No.	PVC Diam. (in.)	Depth Water Sampled (ft)	Date Sampled	pH @ 25° C	Total Dissolved Solids (ppm)	Sulfate SO_4 (ppm)	Boron, B (ppm)	Possible Water Type & Comments
32	2	55.0	02-24-81	9.8	587	121	1.14	Na/HCO_3 - Topanga Conglomerate
32A	2	7.5	03-19-81	8.0	940	434	0.32	Na/SO_4, Basalt
33	1	21.8	02-12-81	7.2	1,504	693	0.66	Na/SO_4
33	2	23.3	02-11-81	7.5	1,154	538	0.38	Na/SO_4
35	1	95.0	02-12-81	7.6	2,605	19	3.2	Na/Cl
36	2	68.3	02-10-81	7.6	732	253	0.28	Na/HCO_3
37	2	127.4	02-10-81	7.0	877	418	0.56	Ca/SO_4
38	2	138.0	02-25-81	7.8	906	463	0.44	Ca/SO_4
Blank #2	-	-	03-02-81	5.9	15	9	0.02	**

** Sample test run in laboratory with piezometer PVC pipe, fabric filter screen, clean sand and distilled water.

Converse Ward Davis Dixon

Lab No. P81-02-186-5

No. Samples : 7
Sampled By : Client
Brought By : Client
Date Received: 2-20-81

Sample labeled: HOLE #1-2"

Conductivity: 1,900 µ mhos/cm
RESISTNITY : 526 OHM-CM
Turbidity: NTU

pH 7.9 @ 25°C
pHs @ 60°F (15.6°C)
pHs @ 140°F (60°C)

	Milligrams per liter (ppm)	Milli-equivalents per liter
Cations determined:		
Calcium, Ca	7.7	0.39
Magnesium, Mg	70	5.76
Sodium, Na	260	11.30
Potassium, K	14	0.36
	Total	17.81
Anions determined:		
Bicarbonate, as HCO_3	515	8.44
Chloride, Cl	100	2.88
Sulfate, SO_4	475	9.89
Fluoride, F	0.7	0.04
Nitrate, as N	6.1	0.44
	Total	22.69
Carbon dioxide, CO_2, Calc.	9	
Hardness, as $CaCO_3$	528	
Silica, SiO_2	44	
Iron, Fe	< 0.01	
Manganese, Mn	< 0.01	
Boron, B	0.98	
Total Dissolved Minerals, (by addition: HCO_3 -> CO_3)	1,258	

Converse Ward Davis Dixon

Lab No. P81-02-186-6

No. Samples : 7
Sampled By : Client
Brought By : Client
Date Received: 2-20-81

Sample labeled: HOLE 2-2"

Conductivity: 710 µ mhos/cm
RESISTIVITY: 1405 OHM CM
Turbidity: NTU

pH 7.7 @ 25°C
pHs @ 60°F (15.6°C)
pHs @ 140°F (60°C)

	Milligrams per liter (ppm)	Milli-equivalents per liter
Cations determined:		
Calcium, Ca	7.5	0.38
Magnesium, Mg	5.0	0.41
Sodium, Na	115	5.00
Potassium, K	9	0.23
		Total 6.02
Anions determined:		
Bicarbonate, as HCO_3	268	4.39
Chloride, Cl	49	1.38
Sulfate, SO_4	57	1.19
Fluoride, F	0.8	0.04
Nitrate, as N	0.2	0.01
		Total 7.01
Carbon dioxide, CO_2, Calc.	8	
Hardness, as $CaCO_3$	125	
Silica, SiO_2	33	
Iron, Fe	0.09	
Manganese, Mn	< 0.01	
Boron, B	0.90	
Total Dissolved Minerals, (by addition: HCO_3 -> CO_3)	412	

MTA LIBRARY

Converse Ward Davis Dixon

Lab No. P81-02-186-1

No. Samples : 7
Sampled By : Client
Brought By : Client
Date Received: 2-20-81

Sample labeled: HOLE 3-2"

Conductivity: 6,100 μ mhos/cm
RESISTIVITY: 164 OHM CM
Turbidity: NTU

pH 7.0 @ 25°C
pHs @ 60°F (15.6°C)
pHs @ 140°F (60°C)

	Milligrams per liter (ppm)	Milli-equivalents per liter
Cations determined:		
Calcium, Ca	183	9.13
Magnesium, Mg	130	10.69
Sodium, Na	1,000	43.50
Potassium, K	17.5	0.45
		Total 63.77
Anions determined:		
Bicarbonate, as HCO_3	387	6.34
Chloride, Cl	2,000	56.42
Sulfate, SO_4	152	3.17
Fluoride, F	0.3	0.02
Nitrate, as N	0.2	0.01
		Total 65.96
Carbon dioxide, CO_2, Calc.	56	
Hardness, as $CaCO_3$	992	
Silica, SiO_2	41	
Iron, Fe	< 0.01	
Manganese, Mn	< 0.01	
Boron, B	5.0	
Total Dissolved Minerals, (by addition: HCO_3 -> CO_3)	3,722	

Converse Ward Davis Dixon

Lab No. P81-02-186-7

No. Samples : 7
Sampled By : Client
Brought By : Client
Date Received: 2-20-81

Sample labeled: HOLE #4-2"

Conductivity: 8,450 μ mhos/cm
RESISTIVITY: 118 OHM CM
Turbidity: NTU

pH 7.6 @ 25°C
pHs @ 60°F (15.6°C)
pHs @ 140°F (60°C)

	Milligrams per liter (ppm)	Milli-equivalents per liter
Cations determined:		
Calcium, Ca	76	3.80
Magnesium, Mg	64	5.27
Sodium, Na	1,800	78.30
Potassium, K	18	0.46
		Total 87.83
Anions determined:		
Bicarbonate, as HCO_3	404	6.62
Chloride, Cl	2,800	79.18
Sulfate, SO_4	79	1.65
Fluoride, F	0.6	0.03
Nitrate, as N	0.3	0.02
		Total 87.50
Carbon dioxide, CO_2, Calc.	15	
Hardness, as $CaCO_3$	453	
Silica, SiO_2	39	
Iron, Fe	0.08	
Manganese, Mn	< 0.01	
Boron, B	7.0	
Total Dissolved Minerals, (by addition: HCO_3 -> CO_3)	5,085	

Converse Ward Davis Dixon

Lab No. P81-02-186-2

No. Samples : 7
Sampled By : Client
Brought By : Client
Date Received: 2-20-81

Sample labeled: HOLE #6-2"

Conductivity: 30,000 μ mhos/cm
RESISTIVITY: 33 OHM CM
Turbidity: NTU

pH 7.5 @ 25°C
pHs @ 60°F (15.6°C)
pHs @ 140°F (60°C)

	Milligrams per liter (ppm)	Milli-equivalents per liter
Cations determined:		
Calcium, Ca	1,055	52.75
Magnesium, Mg	210	17.28
Sodium, Na	6,450	280.58
Potassium, K	38	0.97
		Total 351.58
Anions determined:		
Bicarbonate, as HCO_3	230	3.77
Chloride, Cl	12,255	345.60
Sulfate, SO_4	27	0.56
Fluoride, F	0.4	0.02
Nitrate, as N	0.5	0.04
		Total 349.99
Carbon dioxide, CO_2, Calc.	10	
Hardness, as $CaCO_3$	3,500	
Silica, SiO_2	39	
Iron, Fe	0.08	
Manganese, Mn	0.64	
Boron, B	38	
Total Dissolved Minerals, (by addition: HCO_3 -> CO_3)	20,230	

Converse Ward Davis Dixon

Lab No. P81-03-152-3

Sample labeled: Blank #2

No. Samples : 4
Sampled By : Client
Brought By : Client
Date Received: 3-19-81

Conductivity: 5.4 μ mhos/cm
RESISTIVITY: 185,200 OHM CM
Turbidity: NTU

pH 5.9 @ 25°C
pHs @ 60°F (15.6°C)
pHs @ 140°F (60°C)

	Milligrams per liter (ppm)	Milli-equivalents per liter
Cations determined:		
Calcium, Ca	0.8	0.04
Magnesium, Mg	0.03	0.00
Sodium, Na	< 1	—
Potassium, K	0.2	0.01
		Total 0.05
Anions determined:		
Bicarbonate, as HCO_3	5.6	0.09
Chloride, Cl	1.0	0.03
Sulfate, SO_4	8.6	0.18
Fluoride, F	< 0.1	—
Nitrate, as N	0.42	0.01
		Total 0.31
Carbon dioxide, CO_2, Calc.	> 4.0	
Hardness, as $CaCO_3$	1.3	
Silica, SiO_2	< 1	
Iron, Fe	0.10	
Manganese, Mn	< 0.05	
Boron, B	0.02	
Total Dissolved Minerals, (by addition: $HCO_3 \rightarrow CO_3$)	15	

MTA LIBRARY

Converse Ward Davis Dixon

Lab No. P81-03-017-5

No. Samples : 7
Sampled By : Client
Brought By : Client
Date Received: 3-3-81

Sample labeled: HOLE 38-2"

Conductivity: 1,200 μ mhos/cm
Resistivity: 833 ohm cm
Turbidity: NTU

pH 7.8 @ 25°C
pHs @ 60°F (15.6°C)
pHs @ 140°F (60°C)

	Milligrams per liter (ppm)	Milli-equivalents per liter
Cations determined:		
Calcium, Ca	133	6.14
Magnesium, Mg	28	2.30
Sodium, Na	105	4.88
Potassium, K	6.6	0.17
		Total 13.49
Anions determined:		
Bicarbonate, as HCO_3	165	2.70
Chloride, Cl	34	0.95
Sulfate, SO_4	463	9.64
Fluoride, F	0.4	0.02
Nitrate, as N	5.5	0.39
		Total 13.70
Carbon dioxide, CO_2, Calc.	4	
Hardness, as $CaCO_3$	447	
Silica, SiO_2	29	
Iron, Fe	< 0.01	
Manganese, Mn	< 0.01	
Boron, B	0.44	
Total Dissolved Minerals, (by addition: HCO_3 -> CO_3)	906	

Converse Ward Davis Dixon

Lab No. P81-02-123-1

No. Samples : 6
Sampled By : Client
Brought By : Client
Date Received: 2-12-81

Sample labeled: HOLE 37

Conductivity: 1,220 μ mhos/cm
RESISTIVITY : 820 OHM CM
Turbidity: NTU

pH 7.0 @ 25°C
pHs @ 60°F (15.6°C)
pHs @ 140°F (60°C)

	Milligrams per liter (ppm)	Milli-equivalents per liter
Cations determined:		
Calcium, Ca	132	6.60
Magnesium, Mg	34	2.80
Sodium, Na	100	4.35
Potassium, K	5.8	0.15
		Total 13.90
Anions determined:		
Bicarbonate, as HCO_3	192	3.15
Chloride, Cl	49	1.39
Sulfate, SO_4	418	8.71
Fluoride, F	0.5	0.03
Nitrate, as N	7.1	0.51
		Total 13.79
Carbon dioxide, CO_2, Calc.	28	
Hardness, as $CaCO_3$	470	
Silica, SiO_2	25	
Iron, Fe	0.02	
Manganese, Mn	0.10	
Boron, B	0.56	
Total Dissolved Minerals, (by addition: HCO_3 -> CO_3)	877	

Converse Ward Davis Dixon

Lab No. P81-02-123-4

No. Samples : 6
Sampled By : Client
Brought By : Client
Date Received: 2-12-81

Sample labeled: HOLE 36

Conductivity: 1,170 µ mhos/cm
RESISTIVITY: 855 OHM CM
Turbidity: NTU

pH 7.6 @ 25°C
pHs @ 60°F (15.6°C)
pHs @ 140°F (60°C)

	Milligrams per liter (ppm)	Milli-equivalents per liter
Cations determined:		
Calcium, Ca	65	3.24
Magnesium, Mg	33	2.71
Sodium, Na	125	5.44
Potassium, K	5.2	0.13
		Total 11.52
Anions determined:		
Bicarbonate, as HCO_3	286	4.69
Chloride, Cl	66	1.87
Sulfate, SO_4	253	5.27
Fluoride, F	0.3	0.02
Nitrate, as N	2.3	0.16
		Total 12.01
Carbon dioxide, CO_2, Calc.	10	
Hardness, as $CaCO_3$	298	
Silica, SiO_2	32	
Iron, Fe	< 0.01	
Manganese, Mn	< 0.01	
Boron, B	0.28	
Total Dissolved Minerals, (by addition: HCO_3 -> CO_3)	732	

Converse Ward Davis Dixon

Lab No. P81-02-142-7

No. Samples : 7
Sampled By : Client
Brought By : Client
Date Received: 2-17-81

Sample labeled: HOLE 35-1", 175'

Conductivity: 4,640 µ mhos/cm
RESISTIVITY: 216 OHM CM
Turbidity: NTU

pH 7.6 @ 25°C
pHs @ 60°F (15.6°C)
pHs @ 140°F (60°C)

	Milligrams per liter (ppm)	Milli-equivalents per liter
Cations determined:		
Calcium, Ca	56	2.79
Magnesium, Mg	67	5.51
Sodium, Na	795	34.58
Potassium, K	12	0.31
		Total 43.19
Anions determined:		
Bicarbonate, as HCO_3	343	5.62
Chloride, Cl	1,423	40.12
Sulfate, SO_4	19	0.40
Fluoride, F	0.3	0.02
Nitrate, as N	5.7	0.41
		Total 46.57
Carbon dioxide, CO_2, Calc.	12	
Hardness, as $CaCO_3$	560	
Silica, SiO_2	34	
Iron, Fe	< 0.01	
Manganese, Mn	< 0.01	
Boron, B	3.2	
Total Dissolved Minerals, (by addition: HCO_3 -> CO_3)	2,605	

MTA LIBRARY

Converse Ward Davis Dixon

Lab No. P81-02-123-5

No. Samples : 6
Sampled By : Client
Brought By : Client
Date Received: 2-12-81

Sample labeled: HOLE 33-2"

Conductivity: 1,710 μ mhos/cm
RESISTIVITY: 585 OHM CM
Turbidity: NTU

pH 7.5 @ 25°C
pHs @ 60°F (15.6°C)
pHs @ 140°F (60°C)

	Milligrams per liter (ppm)	Milli-equivalents per liter
Cations determined:		
Calcium, Ca	94	4.69
Magnesium, Mg	68	5.59
Sodium, Na	186	8.09
Potassium, K	5.3	0.14
		Total 18.51
Anions determined:		
Bicarbonate, as HCO_3	329	5.39
Chloride, Cl	60	1.70
Sulfate, SO_4	538	11.21
Fluoride, F	0.7	0.04
Nitrate, as N	2.7	0.19
		Total 18.53
Carbon dioxide, CO_2, Calc.	15	
Hardness, as $CaCO_3$	515	
Silica, SiO_2	27	
Iron, Fe	< 0.01	
Manganese, Mn	< 0.01	
Boron, B	0.38	
Total Dissolved Minerals, (by addition: HCO_3 -> CO_3)	1,154	

Converse Ward Davis Dixon

Lab No. P81-03-017-3

No. Samples : 7
Sampled By : Client
Brought By : Client
Date Received: 3-3-81

Sample labeled: HOLE 33-1"

Conductivity: 2,130 μ mhos/cm
RESISTIVITY: 470 OHM CM
Turbidity: NTU

pH 7.2@25°C
pHs @60°F (15.6°C)
pHs @ 140°F (60°C)

	Milligrams per liter (ppm)	Milli-equivalents per liter
Cations determined:		
Calcium, Ca	198	9.88
Magnesium, Mg	98	8.06
Sodium, Na	145	6.31
Potassium, K	5.8	0.15
		Total 24.40
Anions determined:		
Bicarbonate, as HCO_3	474	7.77
Chloride, Cl	94	2.66
Sulfate, SO_4	693	14.44
Fluoride, F	0.6	0.03
Nitrate, as N	0.3	0.00
		Total 24.90
Carbon dioxide, CO_2, Calc.	43	
Hardness, as $CaCO_3$	898	
Silica, SiO_2	31	
Iron, Fe	< 0.01	
Manganese, Mn	< 0.01	
Boron, B	0.66	
Total Dissolved Minerals, (by addition: HCO_3 -> CO_3)	1,504	

Converse Ward Davis Dixon

Lab No. P81-03-152-4

Sample labeled: Hole 32A Oakshire

No. Samples : 4
Sampled By : Client
Brought By : Client
Date Received: 3-19-81

Conductivity: 1,200 μ mhos/cm
RESISTIVITY : 833 OHM .CM
Turbidity: NTU

pH 8.0 @ 25°C
pHs @ 60°F (15.6°C)
pHs @ 140°F (60°C)

	Milligrams per liter (ppm)	Milli-equivalents per liter
Cations determined:		
Calcium, Ca	91	4.53
Magnesium, Mg	46	3.78
Sodium, Na	152	6.61
Potassium, K	5.7	0.15
		Total 15.07
Anions determined:		
Bicarbonate, as HCO_3	260	4.26
Chloride, Cl	62	1.74
Sulfate, SO_4	434	9.04
Fluoride, F	0.59	0.04
Nitrate, as N	0.5	0.01
		Total 15.09
Carbon dioxide, CO_2, Calc.	3.7	
Hardness, as $CaCO_3$	417	
Silica, SiO_2	12	
Iron, Fe	0.10	
Manganese, Mn	< 0.05	
Boron, B	0.32	
Total Dissolved Minerals, (by addition: $HCO_3 \rightarrow CO_3$)	940	

Converse Ward Davis Dixon

Lab No. P81-03-017-2

No. Samples : 7
Sampled By : Client
Brought By : Client
Date Received: 3-3-81

Sample labeled: HOLE 32-2"

Conductivity: 666 µ mhos/cm
RESISTIVITY: 1502 OHM CM
Turbidity: NTU

pH 9.8 @ 25°C
pHs @ 60°F (15.6°C)
pHs @ 140°F (60°C)

	Milligrams per liter (ppm)	Milli-equivalents per liter
Cations determined:		
Calcium, Ca	3.3	0.16
Magnesium, Mg	1.8	0.15
Sodium, Na	135	5.87
Potassium, K	3.0	0.77
		Total 6.95
Anions determined:		
Carbonate, CO_3	55	1.83
Bicarbonate, as HCO_3	163	1.16
Chloride, Cl	37	1.04
Sulfate, SO_4	121	2.52
Fluoride, F	1.3	0.07
Nitrate, as N	1.5	0.11
		Total 6.73
Carbon dioxide, CO_2, Calc.	< 1	
Hardness, as $CaCO_3$	16	
Silica, SiO_2	30	
Iron, Fe	110	
Manganese, Mn	0.74	
Boron, B	1.14	
Total Dissolved Minerals, (by addition: HCO_3 -> CO_3)	587	

Converse Ward Davis Dixon

Lab No. P81-03-017-1

No. Samples : 7
Sampled By : Client
Brought By : Client
Date Received: 3-3-81

Sample labeled: HOLE 31-2"

Conductivity: 811 µ mhos/cm
Resistivity: 1233 OHM CM
Turbidity: NTU

pH 8.6 @ 25°C
pHs @ 60°F (15.6°C)
pHs @ 140°F (60°C)

	Milligrams per liter (ppm)	Milli-equivalents per liter
Cations determined:		
Calcium, Ca	15	0.75
Magnesium, Mg	1.8	0.15
Sodium, Na	157	6.83
Potassium, K	3.0	0.08
		Total 7.81
Anions determined:		
Bicarbonate, as HCO_3	167	2.74
Chloride, Cl	50	1.41
Sulfate, SO_4	161	3.35
Fluoride, F	0.9	0.05
Nitrate, as N	2.4	0.17
		Total 7.72
Carbon dioxide, CO_2, Calc.	< 1	
Hardness, as $CaCO_3$	45	
Silica, SiO_2	25	
Iron, Fe	2.12	
Manganese, Mn	< 0.01	
Boron, B	0.58	
Total Dissolved Minerals, (by addition: HCO_3 -> CO_3)	511	

Lab No. P81-03-15-1

ANALYSIS OF WATER SAMPLES
FROM
CONVERSE WARD DAVIS DIXON

Sample labeled: Hole 30-2"

No. Samples : 4
Sampled By : Client
Brought By : Client
Date Received: 3-19-81

Conductivity: 880 µ mhos/cm
RESISTIVITY: 1136 OHM CM
Turbidity: NTU

pH 7.9 @ 25°C
pHs @ 60°F (15.6°C)
pHs @ 140°F (60°C)

	Milligrams per liter (ppm)	Milli-equivalents per liter
Cations determined:		
Calcium, Ca	41	2.05
Magnesium, Mg	17.5	1.44
Sodium, Na	142	6.18
Potassium, K	2.1	0.05
	Total	9.72
Anions determined:		
Bicarbonate, as HCO_3	283	4.64
Chloride, Cl	29	0.82
Sulfate, SO_4	202	4.21
Fluoride, F	0.96	0.05
Nitrate, as N	2.5	0.04
	Total	9.76
Carbon dioxide, CO_2, Calc.	5.2	
Hardness, as $CaCO_3$	187	
Silica, SiO_2	32	
Iron, Fe	0.42	
Manganese, Mn	< 0.05	
Boron, B	1.14	
Total Dissolved Minerals, (by addition: $HCO_3 \rightarrow CO_3$)	620	

Converse Ward Davis Dixon

Lab No. P81-03-017-6

No. Samples : 7
Sampled By : Client
Brought By : Client
Date Received: 3-3-81

Sample labeled: HOLE 29-2"

Conductivity: 8,220 μ mhos/cm
RESISTIVITY: 122 OHM CM
Turbidity: NTU

pH 8.0 @ 25°C
pHs @ 60°F (15.6°C)
pHs @ 140°F (60°C)

	Milligrams per liter (ppm)	Milli-equivalents per liter
Cations determined:		
Calcium, Ca	43	2.16
Magnesium, Mg	20	1.65
Sodium, Na	2,025	88.09
Potassium, K	14	0.36
		Total 92.26
Anions determined:		
Bicarbonate, as HCO_3	385	6.31
Chloride, Cl	1,066	30.06
Sulfate, SO_4	2,600	54.16
Fluoride, F	0.8	0.04
Nitrate, as N	0.2	0.01
		Total 90.58
Carbon dioxide, CO_2, Calc.	6	
Hardness, as $CaCO_3$	190	
Silica, SiO_2	31	
Iron, Fe	< 0.01	
Manganese, Mn	0.08	
Boron, B	2.6	
Total Dissolved Minerals (by addition: HCO_3 -> CO_3)	5,996	

Converse Ward Davis Dixon

Lab No. P81-03-152-2

Sample labeled: Hole 28A-2"

No. Samples : 4
Sampled By : Client
Brought By : Client
Date Received: 3-19-81

Conductivity: 920 μ mhos/cm
RESISTIVITY: 1087 ohm cm
Turbidity: NTU

pH 7.8 @ 25°C
pHs @ 60°F (15.6°C)
pHs @ 140°F (60°C)

	Milligrams per liter (ppm)	Milli-equivalents per liter
Cations determined:		
Calcium, Ca	37	1.83
Magnesium, Mg	16.5	1.36
Sodium, Na	224	9.74
Potassium, K	5.8	0.15
		Total 13.08
Anions determined:		
Bicarbonate, as HCO_3	312	5.11
Chloride, Cl	76	2.13
Sulfate, SO_4	272	5.67
Fluoride, F	0.82	0.06
Nitrate, as N	0.39	0.01
		Total 12.98
Carbon dioxide, CO_2, Calc.	7.1	
Hardness, as $CaCO_3$	174	
Silica, SiO_2	12	
Iron, Fe	1.6	
Manganese, Mn	< 0.05	
Boron, B	1.16	
Total Dissolved Minerals, (by addition: $HCO_3 \rightarrow CO_3$)	805	

Converse Ward Davis Dixon

Lab No. P81-02-142-5

No. Samples : 7
Sampled By : Client
Brought By : Client
Date Received: 2-17-81

Sample labeled: HOLE 27-2"

Conductivity: 1,200 µ mhos/cm
RESISTIVITY: 833 OHM CM
Turbidity: NTU

pH 7.8 @ 25°C
pHs @ 60°F (15.6°C)
pHs @ 140°F (60°C)

	Milligrams per liter (ppm)	Milli-equivalents per liter
Cations determined:		
Calcium, Ca	26	1.30
Magnesium, Mg	52	4.28
Sodium, Na	76	3.31
Potassium, K	1.7	0.04
		Total 8.93
Anions determined:		
Bicarbonate, as HCO_3	329	5.39
Chloride, Cl	75	2.12
Sulfate, SO_4	245	5.10
Fluoride, F	0.5	0.03
Nitrate, as N	7.4	0.52
		Total 13.16
Carbon dioxide, CO_2, Calc.	7	
Hardness, as $CaCO_3$	504	
Silica, SiO_2	52	
Iron, Fe	< 0.01	
Manganese, Mn	< 0.01	
Boron, B	0.32	
Total Dissolved Minerals, (by addition: HCO_3 -> CO_3)	725	

Converse Ward Davis Dixon

Lab No. P81-02-142-3

No. Samples : 7
Sampled By : Client
Brought By : Client
Date Received: 2-17-81

Sample labeled: HOLE 26-1", 86'

Conductivity: 1,020 μ mhos/cm
RESISTIVITY: 980 OHM cm
Turbidity: NTU

pH 7.4 @ 25°C
pHs @ 60°F (15.6°C)
pHs @ 140°F (60°C)

	Milligrams per liter (ppm)	Milli-equivalents per liter
Cations determined:		
Calcium, Ca	9.9	0.50
Magnesium, Mg	40	3.29
Sodium, Na	112	4.87
Potassium, K	1.6	0.04
		Total 8.70
Anions determined:		
Bicarbonate, as HCO_3	385	6.31
Chloride, Cl	54	1.53
Sulfate, SO_4	161	3.35
Fluoride, F^4	0.6	0.03
Nitrate, as N	8.1	0.58
		11.80
		Total
Carbon dioxide, CO_2, Calc.	22	
Hardness, as $CaCO_3$	374	
Silica, SiO_2	53	
Iron, Fe	< 0.01	
Manganese, Mn	< 0.01	
Boron, B	0.20	
Total Dissolved Minerals, (by addition: HCO_3 -> CO_3)	660	

Converse Ward Davis Dixon

Lab No. P81-02-142-6

No. Samples : 7
Sampled By : Client
Brought By : Client
Date Received: 2-17-81

Sample labeled: HOLE 25-2"

Conductivity: 949 µ mhos/cm
RESISTIVITY: 1054 OHM CM
Turbidity: NTU

pH 7.6 @ 25°C
pHs @ 60°F (15.6°C)
pHs @ 140°F (60°C)

	Milligrams per liter (ppm)	Milli-equivalents per liter
Cations determined:		
Calcium, Ca	12	0.58
Magnesium, Mg	32	2.63
Sodium, Na	74	3.22
Potassium, K	2.5	0.06
	Total	6.49
Anions determined:		
Bicarbonate, as HCO_3	365	5.98
Chloride, Cl	41	1.15
Sulfate, SO_4	65	1.35
Fluoride, F^4	0.4	0.02
Nitrate, as N	7.6	0.54
	Total	9.04
Carbon dioxide, CO_2, Calc.	13	
Hardness, as $CaCO_3$	298	
Silica, SiO_2	51	
Iron, Fe	0.09	
Manganese, Mn	< 0.01	
Boron, B	0.12	
Total Dissolved Minerals, (by addition: HCO_3 -> CO_3)	494	

Converse Ward Davis Dixon

Lab No. P81-02-186-3

No. Samples : 7
Sampled By : Client
Brought By : Client
Date Received: 2-20-81

Sample labeled: HOLE 23A

Conductivity: 1,300 µ mhos/cm
RESISTIVITY 769 OHM CM
Turbidity: NTU

pH 7.7 @ 25°C
pHs @ 60°F (15.6°C)
pHs @ 140°F (60°C)

	Milligrams per liter (ppm)	Milli-equivalents per liter
Cations determined:		
Calcium, Ca	61	3.04
Magnesium, Mg	44	3.61
Sodium, Na	160	6.96
Potassium, K	5.8	0.15
		Total 13.76
Anions determined:		
Bicarbonate, as HCO_3	389	6.38
Chloride, Cl	120	3.50
Sulfate, SO_4	154	3.21
Fluoride, F	0.7	0.04
Nitrate, as N	18.59	1.33
		Total 14.46
Carbon dioxide, CO_2, Calc.	11	
Hardness, as $CaCO_3$	333	
Silica, SiO_2	42	
Iron, Fe	< 0.01	
Manganese, Mn	< 0.01	
Boron, B	0.38	
Total Dissolved Minerals, (by addition: HCO_3 -> CO_3)	863	

Converse Ward Davis Dixon

Lab No. P81-02-142-4

No. Samples : 7
Sampled By : Client
Brought By : Client
Date Received: 2-17-81

Sample labeled: HOLE 23-2"

Conductivity: 1,020 µ mhos/cm
RESISTIVITY : 980 OHM CM
Turbidity: NTU

pH 7.5 @ 25°C
pHs @ 60°F (15.6°C)
pHs @ 140°F (60°C)

	Milligrams per liter (ppm)	Milli-equivalents per liter
Cations determined:		
Calcium, Ca	1.8	0.09
Magnesium, Mg	43	3.54
Sodium, Na	119	5.18
Potassium, K	3.8	0.10
		Total 8.91
Anions determined:		
Bicarbonate, as HCO_3	595	9.75
Chloride, Cl	74	2.09
Sulfate, SO_4	6	0.12
Fluoride, F	0.3	0.02
Nitrate, as N	0.1	0.01
		Total 11.99
Carbon dioxide, CO_2, Calc.	27	
Hardness, as $CaCO_3$	342	
Silica, SiO_2	44	
Iron, Fe	< 0.01	
Manganese, Mn	< 0.01	
Boron, B	0.22	
Total Dissolved Minerals, (by addition: HCO_3 -> CO_3)	589	

Converse Ward Davis Dixon

Lab No. P81-02-142-2

No. Samples : 7
Sampled By : Client
Brought By : Client
Date Received: 2-17-81

Sample labeled: HOLE 22-2", 200'

Conductivity: 1,170 µ mhos/cm
RESISTIVITY: 855 OHM CM
Turbidity: NTU

pH 7.7 @ 25°C
pHs @ 60°F (15.6°C)
pHs @ 140°F (60°C)

	Milligrams per liter (ppm)	Milli-equivalents per liter
Cations determined:		
Calcium, Ca	38	1.90
Magnesium, Mg	56	4.61
Sodium, Na	174	7.57
Potassium, K	6.1	0.16
		Total 14.24
Anions determined:		
Bicarbonate, as HCO_3	489	8.02
Chloride, Cl	107	3.01
Sulfate, SO_4	124	2.58
Fluoride, F	0.5	0.03
Nitrate, as N	0.2	0.01
		Total 13.65
Carbon dioxide, CO_2, Calc.	14	
Hardness, as $CaCO_3$	325	
Silica, SiO_2	29	
Iron, Fe	< 0.01	
Manganese, Mn	< 0.01	
Boron, B	0.42	
Total Dissolved Minerals, (by addition: HCO_3 -> CO_3)	779	

Converse Ward Davis Dixon

Lab No. P81-02-142-1

No. Samples : 7
Sampled By : Client
Brought By : Client
Date Received: 2-17-81

Sample labeled: HOLE 22-1",40'

Conductivity: 1,170 µ mhos/cm
RESISTIVITY : 855 OHM CM
Turbidity: NTU

pH 8.0 @ 25°C
pHs @ 60°F (15.6°C)
pHs @ 140°F (60°C)

	Milligrams per liter (ppm)	Milli-equivalents per liter
Cations determined:		
Calcium, Ca	7.2	0.36
Magnesium, Mg	52	4.28
Sodium, Na	136	5.92
Potassium, K	2.0	0.05
		Total 10.61
Anions determined:		
Bicarbonate, as HCO_3	423	6.93
Chloride, Cl	122	3.44
Sulfate, SO_4	149	3.10
Fluoride, F	0.4	0.02
Nitrate, as N	0.6	0.04
		Total 13.53
Carbon dioxide, CO_2, Calc.	6	
Hardness, as $CaCO_3$	397	
Silica, SiO_2	37	
Iron, Fe	< 0.01	
Manganese, Mn	< 0.01	
Boron, B	0.24	
Total Dissolved Minerals, (by addition: HCO_3 -> CO_3)	718	

Converse Ward Davis Dixon

Lab No. P81-02-123-6

No. Samples : 6
Sampled By : Client
Brought By : Client
Date Received: 2-12-81

Sample labeled: #21 2" PVC WS-#2

Conductivity: 2,500 µ mhos/cm
RESISTIVITY: 400 OHM CM
Turbidity: NTU

pH 7.4 @ 25°C
pHs @ 60°F (15.6°C)
pHs @ 140°F (60°C)

	Milligrams per liter (ppm)	Milli-equivalents per liter
Cations determined:		
Calcium, Ca	60	2.99
Magnesium, Mg	42	3.45
Sodium, Na	430	18.71
Potassium, K	15	0.38
		Total 25.53
Anions determined:		
Bicarbonate, as HCO_3	446	7.30
Chloride, Cl	577	16.27
Sulfate, SO_4	67	1.40
Fluoride, F	0.6	0.03
Nitrate, as N	1.1	0.08
		Total 25.08
Carbon dioxide, CO_2, Calc.	25	
Hardness, as $CaCO_3$	323	
Silica, SiO_2	31	
Iron, Fe	0.12	
Manganese, Mn	0.20	
Boron, B	1.74	
Total Dissolved Minerals, (by addition: HCO_3 -> CO_3)	1,448	

Converse Ward Davis Dixon

Lab No. P81-02-123-3

No. Samples : 6
Sampled By : Client
Brought By : Client
Date Received: 2-12-81

Sample labeled: #21 3/4" PVC WS-1

Conductivity: 1,430 µ mhos/cm
Resistivity 699 ohm cm
Turbidity: NTU

pH 7.6 @ 25°C
pHs @ 60°F (15.6°C)
pHs @ 140°F (60°C)

	Milligrams per liter (ppm)	Milli-equivalents per liter
Cations determined:		
Calcium, Ca	41	2.04
Magnesium, Mg	45	3.70
Sodium, Na	198	8.61
Potassium, K	5.5	0.14
		Total 14.49
Anions determined:		
Bicarbonate, as HCO_3	419	6.87
Chloride, Cl	78	2.21
Sulfate, SO_4	263	5.48
Fluoride, F	0.6	0.03
Nitrate, as N	0.3	0.02
		Total 14.61
Carbon dioxide, CO_2, Calc.	15	
Hardness, as $CaCO_3$	288	
Silica, SiO_2	25	
Iron, Fe	< 0.01	
Manganese, Mn	< 0.01	
Boron, B	0.58	
Total Dissolved Minerals, (by addition: HCO_3 -> CO_3)	867	

Converse Ward Davis Dixon

Lab No. P81-02-186-4

No. Samples : 7
Sampled By : Client
Brought By : Client
Date Received: 2-20-81

Sample labeled: HOLE 19-2"

Conductivity: 24,000 μ mhos/cm
RESISTIVITY: 42 OHM CM
Turbidity: NTU

pH 7.0 @ 25°C
pHs @ 60°F (15.6°C)
pHs @ 140°F (60°C)

	Milligrams per liter (ppm)	Milli-equivalents per liter
Cations determined:		
Calcium, Ca	51	2.54
Magnesium, Mg	410	33.73
Sodium, Na	5,000	217.50
Potassium, K	248	6.34
Total		260.11
Anions determined:		
Bicarbonate, as HCO_3	1,467	24.04
Chloride, Cl	8,680	244.86
Sulfate, SO_4	240	5.00
Fluoride, F^4	0.2	0.01
Nitrate, as N	0.2	0.01
Total		273.92
Carbon dioxide, CO_2, Calc.	211	
Hardness, as $CaCO_3$	1,810	
Silica, SiO_2	52	
Iron, Fe	< 0.01	
Manganese, Mn	< 0.01	
Boron, B	10.5	
Total Dissolved Minerals, (by addition: HCO_3 -> CO_3)	15,425	

Converse Ward Davis Dixon

Lab No. P81-02-159-2

No. Sampled : 5
Sampled By : Client
Brought By : Client
Date Received: 2-18-81

Sample labeled : HOLE 17-2"

Conductivity: 1,430 µ mhos/cm
RESISTIVITY: 699 ohm cm
Turbidity: NTU

pH 7.6 @ 25°C
pHs @ 60°F (15.6°C)
pHs @ 140°F (60°C)

	Milligrams per liter (ppm)	Milli-equivalents per liter
Cations determined:		
Calcium, Ca	15.7	0.78
Magnesium, Mg	45	3.70
Sodium, Na	177	7.70
Potassium, K	3.8	0.10
		Total 12.28
Anions determined:		
Bicarbonate, as HCO_3	375	6.15
Chloride, Cl	240	6.66
Sulfate, SO_4	87	1.81
Fluoride, F^4	0.3	0.02
Nitrate, as N	0.9	0.06
		Total 14.70
Carbon dioxide, CO_2, Calc.	14	
Hardness, as $CaCO_3$	366	
Silica, SiO_2	34	
Iron, Fe	< 0.01	
Manganese, Mn	< 0.01	
Boron, B	0.12	
Total Dissolved Minerals, (by addition: HCO_3 -> CO_3)	795	

MTA LIBRARY

Converse Ward Davis Dixon

Lab No. P81-02-159-5

No. Samples : 5
Sampled By : Client
Brought By : Client
Date Received: 2-18-81

Sample labeled: HOLE 16-2"

Conductivity: 12,140 µ mhos/cm
RESISTIVITY: 82 OHM CM
Turbidity: NTU

pH 7.5 @ 25°C
pHs @ 60°F (15.6°C)
pHs @ 140°F (60°C)

	Milligrams per liter (ppm)	Milli-equivalents per liter
Cations determined:		
Calcium, Ca	25	1.25
Magnesium, Mg	180	14.81
Sodium, Na	2,400	104.40
Potassium, K	108	2.76
		Total 123.22
Anions determined:		
Bicarbonate, as HCO_3	1,538	25.21
Chloride, Cl	3,300	92.82
Sulfate, SO_4	25	0.52
Fluoride, F	0.3	0.02
Nitrate, as N	10.4	0.17
		Total 118.74
Carbon dioxide, CO_2, Calc.	70	
Hardness, as $CaCO_3$	803	
Silica, SiO_2	63	
Iron, Fe	< 0.01	
Manganese, Mn	< 0.01	
Boron, B	10.0	
Total Dissolved Minerals, (by addition: HCO_3 -> CO_3)	6,926	

Converse Ward Davis Dixon

Lab No. P81-02-159-1

No. Sampled : 5
Sampled By : Client
Brought By : Client
Date Received: 2-18-81

Sample labeled: HOLE 16-1"

Conductivity: 1,960 µ mhos/cm
RESISTIVITY 510 OHM CM
Turbidity: NTU

pH 7.4 @ 25°C
pHs @ 60°F (15.6°C)
pHs @ 140°F (60°C)

	Milligrams per liter (ppm)	Milli-equivalents per liter
Cations determined:		
Calcium, Ca	11.2	0.56
Magnesium, Mg	55	4.52
Sodium, Na	248	10.79
Potassium, K	9.5	0.24
Total		16.11
Anions determined:		
Bicarbonate, as HCO_3	519	8.51
Chloride, Cl	280	8.02
Sulfate, SO_4	231	4.81
Fluoride, F	0.6	0.03
Nitrate, as N	0.3	0.02
Total		21.39
Carbon dioxide, CO_2, Calc.	30	
Hardness, as $CaCO_3$	534	
Silica, SiO_2	44	
Iron, Fe	< 0.01	
Manganese, Mn	< 0.01	
Boron, B	0.14	
Total Dissolved Minerals, (by addition: HCO_3 -> CO_3)	1,139	

Converse Ward Davis Dixon

Lab No. P81-02-159-3

No. Samples : 5
Sampled By : Client
Brought By : Client
Date Received: 2-18-81

Sample labeled: HOLE 14-2"

Conductivity: 1,120 μ mhos/cm
RESISTIVITY: 893 OHM CM
Turbidity: NTU

pH 7.9 @ 25°C
pHs @ 60°F (15.6°C)
pHs @ 140°F (60°C)

	Milligrams per liter (ppm)		Milli-equivalents per liter
Cations determined:			
Calcium, Ca	29		1.45
Magnesium, Mg	5		0.41
Sodium, Na	216		9.40
Potassium, K	17		0.43
		Total	11.69
Anions determined:			
Bicarbonate, as HCO_3	382		6.26
Chloride, Cl	120		3.49
Sulfate, SO_4	67		1.40
Fluoride, F	0.5		0.03
Nitrate, as N	0.7		0.05
		Total	11.23
Carbon dioxide, CO_2, Calc.	7		
Hardness, as $CaCO_3$	93		
Silica, SiO_2	29		
Iron, Fe	< 0.01		
Manganese, Mn	< 0.01		
Boron, B	0.22		
Total Dissolved Minerals, (by addition: HCO_3 ->CO_3)	677		

Converse Ward Davis Dixon

Lab No. P81-02-159-4

No. Samples : 5
Sampled By : Client
Brought By : Client
Date Received: 2-18-81

Sample labeled: HOLE 12-2"

Conductivity: 9,895 µ mhos/cm
Resistivity : 101 OHM CM
Turbidity: NTU

pH 7.5 @ 25°C
pHs @ 60°F (15.6°C)
pHs @ 140°F (60°C)

	Milligrams per liter (ppm)	Milli-equivalents per liter
Cations determined:		
Calcium, Ca	90	4.50
Magnesium, Mg	84	6.91
Sodium, Na	2,040	88.74
Potassium, K	27	0.69
		Total 100.84
Anions determined:		
Bicarbonate, as HCO_3	770	12.62
Chloride, Cl	3,300	92.93
Sulfate, SO_4	40	0.83
Fluoride, F	0.4	0.02
Nitrate, as N	1.7	0.12
		Total 106.52
Carbon dioxide, CO_2, Calc.	35	
Hardness, as $CaCO_3$	570	
Silica, SiO_2	50	
Iron, Fe	< 0.01	
Manganese, Mn	< 0.01	
Boron, B	14.0	
Total Dissolved Minerals, (by addition: HCO_3 -> CO_3)	6,038	

Converse Ward Davis Dixon

Lab No. P81-02-123-2

No. Samples : 6
Sampled By : Client
Brought By : Client
Date Received: 2-12-81

Sample labeled: Geology Hole #11 Sample #1 Flow Rate 0.75 gal/min.

Conductivity: 29,070 µ mhos/cm
RESISTIVITY: 34 OHM CM
Turbidity: NTU

pH 7.2 @ 25°C
pHs @ 60°F (15.6°C)
pHs @ 140°F (60°C)

	Milligrams per liter (ppm)	Milli-equivalents per liter
Cations determined:		
Calcium, Ca	845	42.25
Magnesium, Mg	210	17.27
Sodium, Na	6,500	282.75
Potassium, K	49	1.25
		Total 343.52
Anions determined:		
Bicarbonate, as HCO_3	362	5.93
Chloride, Cl	11,785	332.44
Sulfate, SO_4	5	0.10
Fluoride, F	0.4	0.02
Nitrate, as N	0.3	0.02
		Total 338.51
Carbon dioxide, CO_2, Calc.	33	
Hardness, as $CaCO_3$	2,970	
Silica, SiO_2	58	
Iron, Fe	< 0.01	
Manganese, Mn	0.09	
Boron, B	37.5	
Total Dissolved Minerals, (by addition: HCO_3 -> CO_3)	19,670	

Converse Ward Davis Dixon

Lab No. P81-03-017-8

No. Samples : 7
Sampled By : Client
Brought By : Client
Date Received: 3-3-81

Sample labeled: HOLE 10-1"

Conductivity: 5,620 µ mhos/cm
RESISTIVITY: 178 OHM CM
Turbidity: NTU

pH 7.4 @ 25°
pHs @ 60°F (15.6°C)
pHs @ 140°F (60°C)

	Milligrams per liter (ppm)	Milli-equivalents per liter
Cations determined:		
Calcium, Ca	411	20.51
Magnesium, Mg	230	18.92
Sodium, Na	670	29.15
Potassium, K	25	0.64
Total		69.22
Anions determined:		
Bicarbonate, as HCO_3	303	4.97
Chloride, Cl	731	20.60
Sulfate, SO_4	2,200	45.83
Fluoride, F^4	0.6	0.03
Nitrate, as N	1.2	0.09
Total		71.52
Carbon dioxide, CO_2, Calc.	17	
Hardness, as $CaCO_3$	1,970	
Silica, SiO_2	34	
Iron, Fe	< 0.01	
Manganese, Mn	0.02	
Boron, B	2.44	
Total Dissolved Minerals, (by addition: HCO_3 -> CO_3)	4,461	

Converse Ward Davis Dixon

Lab No. P81-03-017-4

No. Samples : 7
Sampled By : Client
Brought By : Client
Date Received: 3-3-81

Sample labeled: HOLE 9-2"

Conductivity: 853 μ mhos/cm
RESISTIVITY: 1172 OHM CM
Turbidity: NTU

pH 7.7 @ 25°C
pHs @ 60°F (15.6°C)
pHs @ 140°F (60°C)

	Milligrams per liter (ppm)	Milli-equivalents per liter
Cations determined:		
Calcium, Ca	32	1.60
Magnesium, Mg	7.5	0.62
Sodium, Na	127	5.52
Potassium, K	12	0.31
		Total 8.05
Anions determined:		
Bicarbonate, as HCO_3	202	3.31
Chloride, Cl	101	2.84
Sulfate, SO_4	82	1.71
Fluoride, F^4	0.7	0.04
Nitrate, as N	0.4	0.02
		Total 7.95
Carbon dioxide, CO_2, Calc.	6	
Hardness, as $CaCO_3$	111	
Silica, SiO_2	20	
Iron, Fe	< 0.01	
Manganese, Mn	< 0.01	
Boron, B	0.74	
Total Dissolved Minerals, (by addition: HCO_3 -> CO_3)	485	

APPENDIX 2

SOIL/ROCK CHEMICAL ANALYSIS - BORE HOLE SAMPLES

(SCRTD)

Converse Consultants

R. Smith

Geotechnical Engineering
and Applied Sciences

126 West Del Mar Boulevard
Pasadena, California 91105
Telephone 213 795-0461

May 26, 1982

Southern California Rapid Transit District
Metro Rail Project - WBS 12AAC
425 South Main Street
Los Angeles, California 90013

Attention: Mr. James E. Crawley, Deputy Chief Engineer
Ways and Structures

Subject: RESULTS - SOIL/ROCK CHEMICAL ANALYSES
Supplemental Geotechnical Information
For Waters Consultants, Corrosion Engineer
CCI Project No. 80-1280-90

Gentlemen:

The results of chemical analyses on selected boring samples are enclosed. This testing was authorized by RTD on April 27, 1982 and performed in accordance with our April 21, 1982 proposal in response to a request by your corrosion engineering consultant, Waters Consultants.

Very truly yours,

CONVERSE CONSULTANTS, INC.

Howard A. Spellman
Project Manager

HAS:mr

Dist: 2/Addressee
1/Waters Consultants
Attention: Donald M. Waters

JACOBS LABORATORIES

373 SOUTH FAIR OAKS AVENUE
PASADENA, CALIFORNIA 91105
TELEPHONE (213) 795-7553 (213) 681-4655

RECEIVED
MAY 25 1982
CONVERSE CONSULTANTS
Pasadena

FORMERLY PJB LABORATORIES
DISTRIBUTION
EMPL | ✓ | DATE
Rmp
BILLING
PROJECT FILE
PB-12B-90
PB-12B-90

May 22, 1982

Lab No. PB2-05-041

Converse Consultants
126 W. Del Mar Avenue
Pasadena, CA 91105

Attention: Howard A. Spellman
Project Manager

No. Samples : 24
Sampled By : Client
Brought By : Client
Date Received : 5-5-82

Report of Soil Analysis

The following analytical data characterizes 24 samples of soil requiring pH, Resistivity, Sulfate and Chloride and 12 samples of soil requiring pH and Resistivity. The analyses were performed according to EPA methodology. The Sulfate and Chloride results are expressed as mg/kg on a dry weight basis.

Sample Identification	pH @ 25°C	Resistivity, ohm-cm	Chloride, mg/kg	Sulfate, mg/kg
Boring CEG 5 85.0-88.5	3.0	600	123	6,030
Boring CEG 5 139.0-144.0	6.1	1,680	316	648
Boring CEG 7 40.0-42.5	6.8	650	236	4,850
Boring CEG 7 167.5-172.5	6.6	670	558	5,052
Boring CEG 8 78.0-86.0	5.5	10,400	29	69
Boring CEG 8 100.0-102.0	2.6	375	56	14,500
Boring CEG 8 186.0-196.5	6.5	1,100	75	2,316
Boring CEG 13 20.0-26.5	5.4	15,400	24	149
Boring CEG 13 172.5-177.5	6.0	750	62	5,330
Boring CEG 15 70.0-76.5	2.6	280	5,110	27,000
Boring CEG 15 120.0-125.0	3.5	500	411	7,820
Boring CEG 18 5.0-11.0	6.9	2,900	31	58
Boring CEG 18 75.0-80.0	3.1	580	40	7,950
Boring CEG 18 170.0-178.0	6.3	380	2,190	5,340
Boring CEG 20 44.0-51.5	5.4	5,300	21	444

Lab No. P82-05-041

Sample Identification		pH @ 25°C	Resistivity, ohm-cm	Chloride, mg/kg	Sulfate, mg/kg
Boring CEG 20	105.0-110.0	6.0	1,400	1,176	239
Boring CEG 20	150.0-155.0	6.5	480	2,906	1,536
Boring CEG 24	40.0-46.0	5.8	6,700	57	27
Boring CEG 24	155.0-162.5	5.6	9,200	25	14
Boring CEG 28	35.0-46.5	5.8	8,600	26	24
Boring CEG 28	159.0-171.5	5.6	10,000	26	36
Boring CEG 34	40.0-46.0	5.7	5,400	43	214
Boring CEG 34	55.0-61.5	6.2	900	45	3,434
Boring CEG 34	193.4-198.5	5.5	420	73	69

Sample Identification		pH @ 25°C	Resistivity, ohm-cm
Boring CEG 1	40.0-45.0	5.8	1,800
Boring CEG 1	122.0-128.0	6.2	600
Boring CEG 3	60.0-85.0	3.6	1,250
Boring CEG 3	100.0-110.0	6.7	400
Boring CEG 10	40.0-50.0	6.6	500
Boring CEG 10	180.0-190.0	3.6	570
Boring CEG 11	25.0-29.0	3.3	670
Boring CEG 11	145.0-152.0	6.4	380
Boring CEG 23	90.0-110.0	5.7	4,500
Boring CEG 23	156.0-165.0	6.5	960
Boring CEG 32	90.0-100.0	7.3	4,700
Boring CEG 32	280.0-300.0	6.9	8,700
Boring CEG 38	60.0-100.0	5.9	15,000
Boring CEG 38	180.0-200.0	6.0	8,300

Sincerely,

David Ben-Hur

David Ben-Hur, Ph.D.
Laboratory Director

jmm

Invoice 19458 separate cover

APPENDIX 3

SURFACE SOIL RESISTIVITY ALONG REVISED ALIGNMENT

(SCRTD)

Villalobos & Associates Inc.

Consulting Engineers
3995 Smith Street • Union City, CA 94587
Telephone (415) 489-9660

June 13, 1983

Job #8216

Mr. Donald M. Waters
PSG-Waters Consultants
7807 Convoy Court, Suite 110
San Diego, CA 92111

SUBJECT: Southern California Rapid Transit District
Metro Rail Project

Dear Don:

A soil resistivity survey was performed at the location of the proposed main yard and shops in Downtown Los Angeles. Data were gathered by Alan Mulkey and David Burton over a six (6) day period from May 31 to June 7, 1983.

Enclosed are the following:

- Soil resistivity measurements for seventy-one (71) sites
- Description of the location of the sites where the soil resistivity readings were taken and a notation of special conditions near the sites, such as underground tanks and highrise buildings (potential elevator shaft locations)
- A map which indicates the location of the seventy-one (71) sites

On June 14, 1983, by express mail, I will send you the atmospheric information we have gathered.

Please contact me if you have any questions regarding the survey.

Very truly yours,

VILLALOBOS & ASSOCIATES

Jose L. Villalobos, P.E.
President

JLV:cac

Enclosures

APPENDIX 3

SURFACE SOIL RESISTIVITIES ALONG REVISED SCRTD ALIGNMENT

Soil Resistance (Ohm) and Calculated Resistivity[1] (Ohm-Cm)

TEST	DEPTH, Equals Pin Spacing													
	2'-7"		5'-3"		7'-10"		10'-6"		15'-8"		25'-0"		50'-0"	
SITE[2]	ohm	ohm-cm	ohm	ohm-cm	ohm	ohm-cm	ohm	ohm-cm	ohm	ohm-cm	ohm	ohm-cm	ohm	ohm-cm
1	7.50	3,710	5.79	5,821	4.00	6,000	3.35	6,736	2.64	7,920	1.80	8,618	0.009	86
2	68.50	33,887	20.5	20,610	7.80	11,701	4.75	9,551	3.20	9,601	0.50	2,394	**	**
3	3.50	1,731	1.35	1,357	0.68	1,020	0.38	764	0.094	282	0.0726	348	**	**
4	5.50	2,721	1.60	1,609	0.39	585	0.17	342	0.07	210	0.0174	83	**	**
5	3.12	1,543	0.92	925	0.617	926	0.257	517	0.165	495	0.156	747	*	*
6	2.85	1,410	1.20	1,206	0.761	1,142	0.545	1,096	0.323	969	0.039	187	**	**
7	2.00	989	0.84	845	0.545	818	0.361	726	0.335	1,005	0.17	814	*	*
8	4.91	2,429	3.98	4,001	3.60	5,400	3.70	7,440	1.95	5,850	0.905	4,333	0.0175	168
9	3.71	1,835	1.35	1,357	0.52	780	0.345	694	0.42	1,260	**	**	**	**
10	1.42	702	0.461	463	0.205	308	0.069	139	**	**	**	**	**	**
11	4.81	2,380	1.65	1,659	1.10	1,650	0.655	1,317	0.341	1,023	**	**	**	**
12	1.20	594	0.71	714	0.521	782	0.439	883	0.410	1,230	0.255	1,221	*	*
13	5.23	2,587	1.50	1,508	0.67	1,005	0.57	1,146	0.361	1,083	0.201	962	*	*
14	9.00	4,452	2.31	2,322	0.771	1,157	0.385	774	0.148	444	**	**	**	**

[1] $\rho = 191.5\ Rd$, where ρ = resistivity, ohm-cm; R = resistance, ohm; d = pin spacing, feet

[2] Numbers are referenced to site plan and Table 2

* Not enough room to perform test

** Too low to read

APPENDIX 3

SURFACE SOIL RESISTIVITIES ALONG REVISED SCRTD ALIGNMENT

Soil Resistance (Ohm) and Calculated Resistivity[1] (Ohm-Cm)

DEPTH, Equals Pin Spacing

TEST	2'-7"		5'-3"		7'-10"		10'-6"		15'-8'		25'-0"		50'-0"	
SITE[2]	ohm	ohm-cm	ohm	ohm-cm	ohm	ohm-cm	ohm	ohm-cm	ohm	ohm-cm	ohm	ohm-cm	ohm	ohm-cm
15	3.00	1,484	1.89	1,900	1.16	1,740	0.710	1,428	0.255	765	0.039	187	**	**
16	6.67	3,300	3.20	3,217	1.25	1,875	0.457	919	0.221	663	0.023	110	*	*
17	1.45	717	0.611	614	0.380	570	0.275	553	0.169	507	0.061	292	0.011	10
18	1.75	866	0.714	718	0.471	707	0.329	662	0.20	600	0.076	364	0.0276	26
19	2.54	1,257	0.47	473	0.219	329	0.0615	124	0.034	102	0.0675	323	0.0065	6
20	2.25	1,113	0.445	447	0.370	555	0.293	589	0.06	180	**	**	**	**
21	2.19	1,083	0.981	986	0.580	870	0.550	1,106	0.336	1,008	0.0585	280	0.005	4
22	26.9	13,308	3.55	3,569	0.42	630	**	**	**	**	0.019	91	**	**
23	3.01	1,489	1.70	1,709	1.22	1,830	0.957	1,924	0.692	2,076	0.390	1,867	0.0204	19
24	10.81	5,348	4.99	5,017	2.18	3,270	1.05	2,111	0.211	633	0.062	297	**	**
25	2.55	1,262	0.890	895	0.520	780	0.402	808	0.200	600	0.140	670	0.0568	54
26	1.85	915	0.789	793	0.518	777	0.395	794	0.247	741	0.130	622	0.049	46
27	3.51	1,736	1.20	1,206	0.50	750	0.351	706	0.196	588	0.0712	341	0.0099	9
28	2.10	1,039	0.855	860	0.453	680	0.299	601	0.150	450	0.024	115	0.0375	35

[1] p = 191.5 Rd, where p = resistivity, ohm-cm; R = resistance, ohm; d = pin spacing, feet

[2] Numbers are referenced to site plan and Table 2

* Not enough room to perform test

** Too low to read

APPENDIX 3

SURFACE SOIL RESISTIVITIES ALONG REVISED SCRTD ALIGNMENT

Soil Resistance (Ohm) and Calculated Resistivity[1] (Ohm-Cm)

TEST	DEPTH, Equals Pin Spacing													
	2'-7"		5'-3"		7'-10"		10'-6"		15'-8"		25'-0"		50'-0"	
SITE[2]	ohm	ohm-cm	ohm	ohm-cm	ohm	ohm-cm	ohm	ohm-cm	ohm	ohm-cm	ohm	ohm-cm	ohm	ohm-cm
29	3.98	1,969	1.69	1,699	0.819	1,229	0.531	1,068	0.290	870	0.180	862	0.045	431
30	1.90	940	0.83	834	0.529	794	0.415	834	0.278	834	0.150	718	0.051	488
31	3.39	1,677	0.778	782	0.360	540	0.219	440	0.031	93	0.008	38	**	**
32	2.55	1,262	0.915	920	0.554	831	0.412	828	0.301	903	0.254	1,216	0.0649	621
33	1.50	742	0.514	517	0.299	449	0.235	473	0.215	645	0.150	718	0.005	48
34	2.71	1,341	0.913	918	0.42	630	0.0891	179	0.0305	92	**	**	**	**
35	7.68	3,799	2.53	2,544	1.42	2,130	1.13	2,272	0.633	1,899	0.185	886	0.170	1,628
36	3.60	1,781	0.759	763	0.385	578	0.135	271	0.0063	19	**	**	**	**
37	2.17	1,074	1.10	1,106	0.751	1,127	0.689	1,385	0.454	1,362	0.345	1,652	0.0131	125
38	4.69	2,320	2.02	2,031	1.21	1,815	0.83	1,669	0.381	1,143	0.175	838	*	*
39	4.50	2,226	1.51	1,518	0.915	1,373	0.771	1,550	0.469	1,407	0.299	1,431	*	*
40	2.99	1,479	1.59	1,599	0.929	1,394	0.591	1,188	0.399	1,197	0.195	934	0.028	268
41	8.42	4,165	4.51	4,534	2.78	4,170	2.60	5,228	1.71	5,130	1.195	5,721	0.245	2,346
42	9.71	4,804	5.50	5,530	4.9	7,350	4.55	9,149	2.96	8,880	1.59	7,612	*	*

[1] $\rho = 191.5\ Rd$, where ρ = resistivity, ohm-cm; R = resistance, ohm; d = pin spacing, feet

[2] Numbers are referenced to site plan and Table 2

* Not enough room to perform test

** Too low to read

APPENDIX 3

SURFACE SOIL RESISTIVITIES ALONG REVISED SCRTD ALIGNMENT

Soil Resistivities (Ohm) and Calculated Resistivity[1] (Ohm-Cm)

TEST	DEPTH, Equals Pin Spacing													
	2'-7"		5'-3"		7'-10"		10'-6"		15'-8"		25'-0"		50'-0"	
SITE[2]	ohm	ohm-cm	ohm	ohm-cm	ohm	ohm-cm	ohm	ohm-cm	ohm	ohm-cm	ohm	ohm-cm	ohm	ohm-cm
43	7.50	3,710	3.15	3,167	2.00	3,000	1.71	3,438	0.951	2,853	0.400	1,915	**	**
44	20.0	9,894	7.12	7,158	3.25	4,875	1.85	3,720	0.881	2,643	0.195	934	**	**
45	17.56	8,687	5.58	5,610	2.61	3,915	1.35	2,715	0.463	1,389	0.200	958	0.023	220
46	8.17	4,042	3.51	3,529	1.89	2,835	1.68	3,378	1.12	3,360	0.695	3,327	0.268	2,566
47	10.8	5,343	3.21	3,227	1.74	2,610	1.70	3,418	0.96	2,880	0.345	1,652	**	**
48	4.60	2,276	1.71	1,719	0.824	1,236	0.355	714	0.037	111	0.006	29	**	**
49	1.50	742	0.885	890	0.704	1,056	0.593	1,192	0.423	1,269	0.213	1,020	*	*
50	4.15	2,053	2.27	2,282	1.34	2,010	0.890	1,790	0.485	1,455	0.295	1,412	0.0403	386
51	2.21	1,093	0.785	789	0.320	480	0.149	300	0.210	630	0.014	67	*	*
52	4.35	2,152	2.03	2,041	1.30	1,950	0.880	1,769	0.605	1,815	0.405	1,939	*	*
53	3.23	1,598	2.40	2,413	1.70	2,550	1.25	2,513	0.775	2,325	0.445	2,130	*	*
54	2.00	989	0.700	704	0.370	555	0.235	473	0.100	300	0.074	354	0.007	67
55	3.90	1,929	1.40	1,408	0.760	1,140	0.639	1,285	0.381	1,143	0.190	910	0.047	450
56	5.45	2,696	3.49	3,509	2.70	4,050	2.17	4,363	1.72	5,160	0.934	4,472	0.399	3,820

[1] $\rho = 191.5\ Rd$, where ρ = resistivity, ohm-cm; R = resistance, ohm, d = pin spacing, feet

[2] Numbers are referenced to site plan and Table 2

* Not enough room to perform test

** Too low to read

APPENDIX 3

SURFACE SOIL RESISTIVITIES ALONG REVISED SCRTD ALIGNMENT

Soil Resistivities (Ohm) and Calculated Resistivity[1] (Ohm-Cm)

DEPTH, Equals Pin Spacing

TEST	2'-7"		5'-3"		7'-10"		10'-6"		15'-8"		25'-0"		50'-0"	
SITE[2]	ohm	ohm-cm	ohm	ohm-cm	ohm	ohm-cm	ohm	ohm-cm	ohm	ohm-cm	ohm	ohm-cm	ohm	ohm-cm
57	3.45	1,701	1.69	1,699	1.01	1,515	0.728	1,464	0.304	912	0.195	934	0.0535	512
58	12.31	6,090	4.86	4,886	2.87	4,305	2.25	4,524	1.21	3,630	1.15	5,506	0.219	2,097
59	11.60	5,739	6.57	6,605	4.51	6,765	4.23	8,505	2.73	8,190	1.61	7,708	0.192	1,838
60	4.25	2,103	2.08	2,091	1.21	1,815	0.812	1,633	0.341	1,023	0.0463	222	**	**
61	2.51	1,242	1.08	1,086	0.646	969	0.526	1,058	0.344	1,032	0.151	723	0.043	412
62	6.61	3,270	1.39	1,397	0.698	1,047	0.435	875	0.269	807	0.241	1,154	*	*
63	6.12	3,028	3.13	3,147	1.27	1,905	0.369	742	0.008	24	**	**	**	**
64	24.3	12,021	8.51	8,556	6.27	9,406	5.19	10,436	3.59	10,771	0.983	4,706	0.074	708
65	35.99	17,805	19.98	20,087	12.40	18,601	4.39	8,827	0.872	2,616	**	**	**	**
66	81.50	40,319	17.50	17,594	3.18	4,770	1.24	2,493	0.468	1,404	**	**	**	**
67	5.69	2,815	3.90	3,921	2.71	4,065	1.97	3,961	1.25	3,750	0.595	2,849	0.016	153
68	4.20	2,078	2.96	2,976	2.43	3,645	2.04	4,102	1.62	4,860	0.905	4,333	0.400	4,213
69	133.0	65,796	45.3	45,543	22.9	34,352	13.3	26,743	3.51	10,531	0.627	3,002	**	**
70	4.25	2,103	3.12	3,137	2.65	3,975	2.21	4,444	2.00	6,000	1.48	7.086	0.661	6,329

[1] $p = 191.5\ Rd$, where p = resistivity, ohm-cm; R = resistance, ohm; d = pin spacing, feet

[2] Numbers are referenced to site plan and Table 2

* Not enough room to perform test

** Too low to read

APPENDIX 3

SURFACE SOIL RESISTIVITIES ALONG REVISED SCRTD ALIGNMENT

Soil Resistivities (Ohm) and Calculated Resistivity[1] (Ohm-Cm)

DEPTH, Equals Pin Spacing

TEST	2'-7"		5'-3"		7'-10"		10'-6"		15'-8"		25'-0"		50'-0"	
SITE[2]	ohm	ohm-cm	ohm	ohm-cm	ohm	ohm-cm	ohm	ohm-cm	ohm	ohm-cm	ohm	ohm-cm	ohm	ohm-cm
71	38.2	18,898	25.9	26,039	14.8	22,201	8.41	16.910	5.05	15,151	2.28	10,916	0.038	364

[1] p = 191.5 Rd, where p = resistivity, ohm-cm; R= resistance, ohm; d = pin spacing, feet

[2] Numbers are referenced to site plan and Table 2

* Not enough room to perform test

** Too low to read

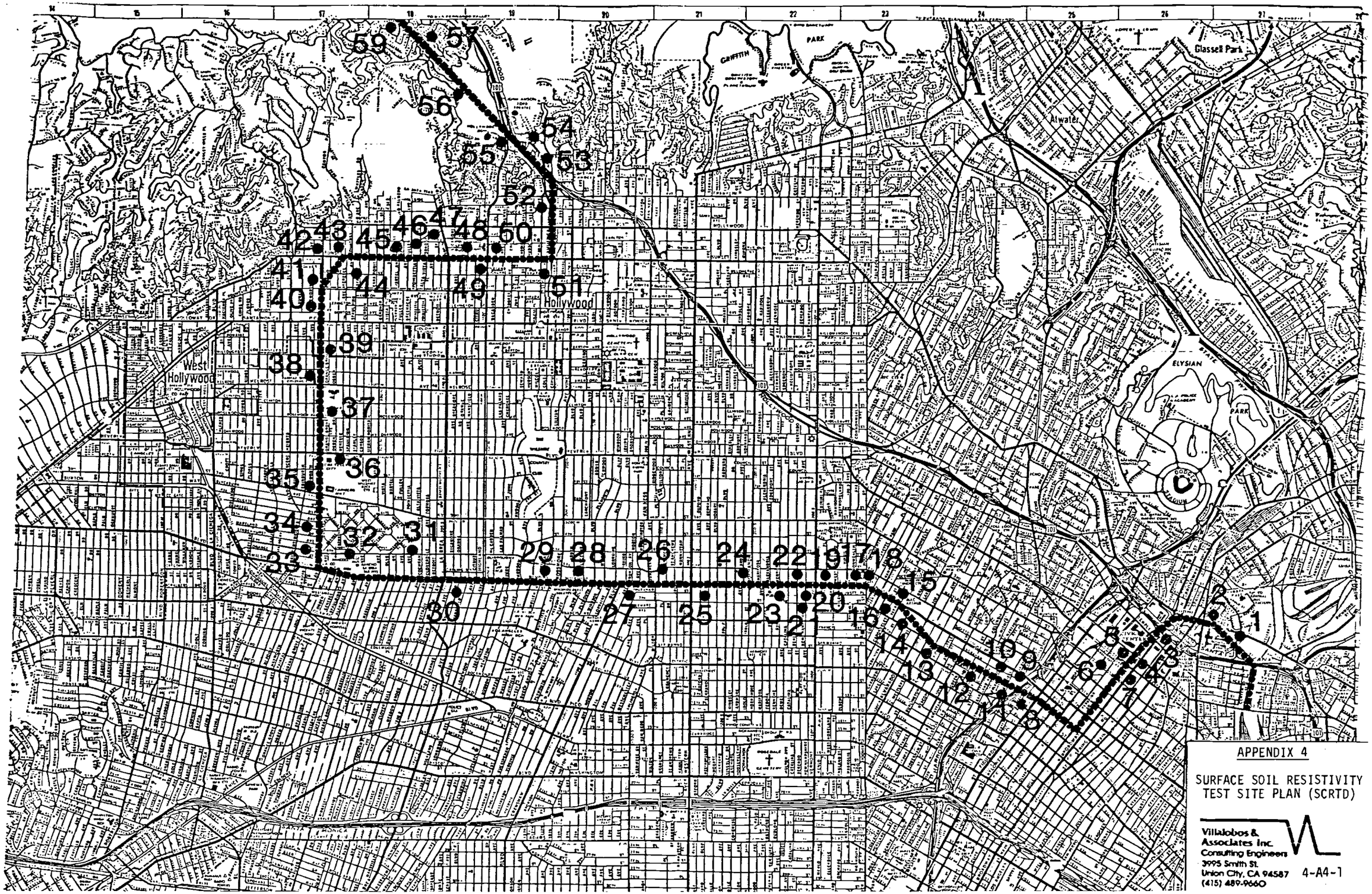

APPENDIX 4

SURFACE SOIL RESISTIVITY TEST SITE PLAN (SCRTD)

Villalobos & Associates Inc.
Consulting Engineers
3995 Smith St.
Union City, CA 94587
(415) 489-9660

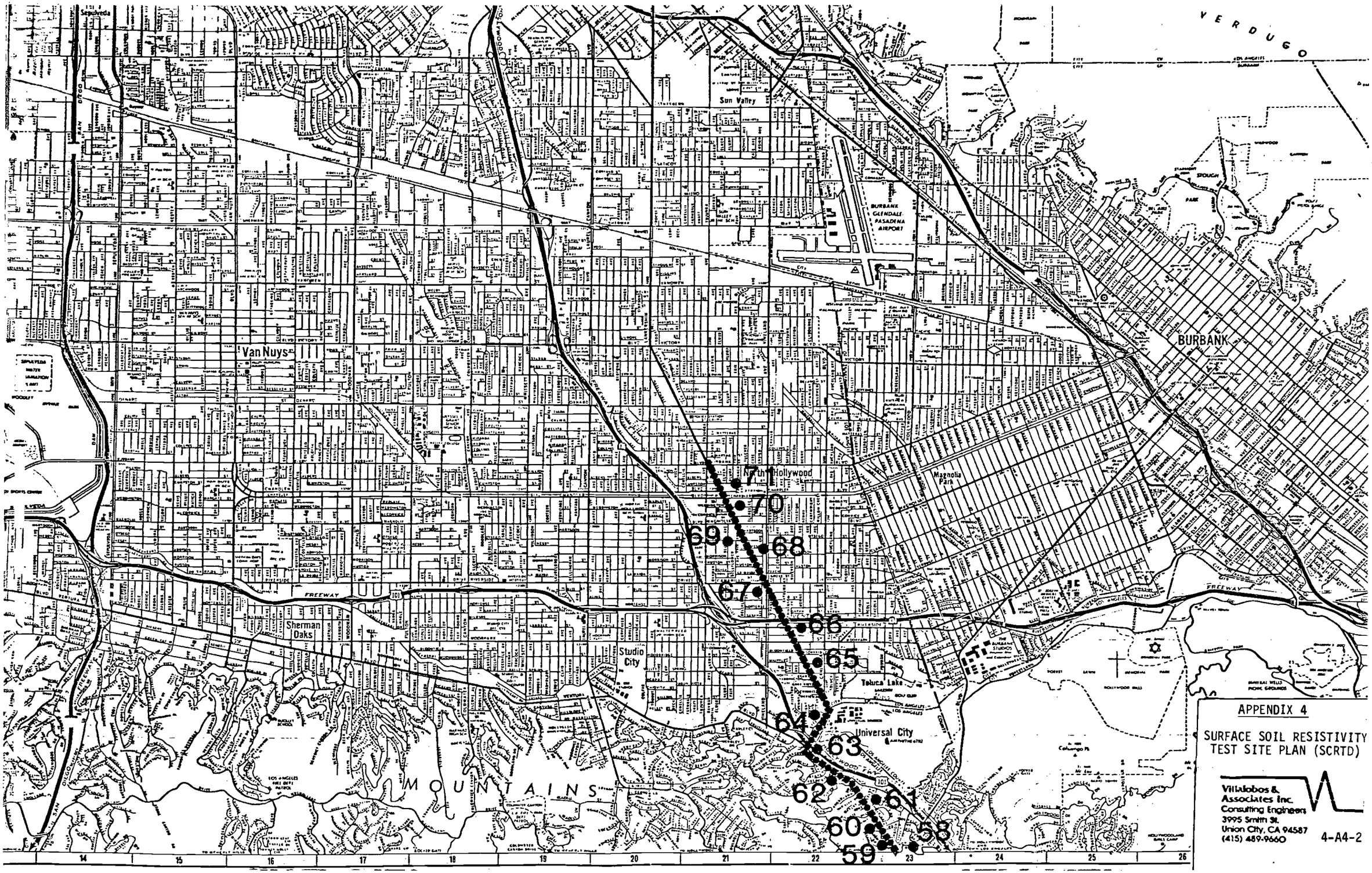

APPENDIX 4

SURFACE SOIL RESISTIVITY TEST SITE PLAN (SCRTD)

Villalobos & Associates Inc.
Consulting Engineers
3995 Smith St.
Union City, CA 94587
(415) 489-9660

4-A4-2

APPENDIX 5

SURFACE SOIL RESISTIVITY TEST SITE LOCATIONS AND COMMENTS (SCRTD)

TEST SITE[1]	LOCATION	COMMENTS
1	Vignes St. and Ramirez St.	Shell gas station at Macy St. and Vignes St.
2	Alameda St. and Macy St.	Shell and Chevron gas stations at North Main St. and Macy St.
3	Broadway and Hollywood Freeway	Southern California Gas main valve at Broadway and Temple St.
4	Hill St. and First St.	Numerous highrise buildings along Hill St. and Broadway
5	Hill St. and Second St.	
6	Grand Ave. and Third St.	
7	Hill St. and Second St.	
8	Seventh St. and Francisco St.	Numerous highrise buildings along Seventh St.
9	Seventh St. and Harbor Freeway	
10	Seventh St. and Lucas Ave.	
11	Seventh St. and Bixel St.	
12	Seventh St. and Columbia Ave.	
13	Seventh St. and Bonnie Brae St.	
14	Seventh St. and Grand View St.	MacArthur Park
15	Wilshire Blvd. and Park View St.	MacArthur Park
16	Wilshire Blvd. and Carondelet St.	3 highrise buildings nearby

[1] Numbers are referenced to Site Plan (Appendix 4) and Resistivity Table (Appendix 3)

APPENDIX 5

SURFACE SOIL RESISTIVITY TEST SITE LOCATIONS AND COMMENTS (SCRTD)

TEST SITE[2]	LOCATION	COMMENTS
17	Wilshire Blvd. and Commonwealth Ave.	2 highrise buildings nearby: Sheraton Town House and CNA
1B	Wilshire Blvd. and Hoover St.	Lafayette Park
19	Wilshire Blvd. and Shatto Pl.	
20	Wilshire Blvd. and New Hampshire Ave.	
21	Seventh St. and New Hampshire Ave.	Shell gas station at Seventh St. and Vermont Ave.
22	Wilshire Blvd. and Berendo St.	4 highrise buildings nearby
23	Wilshire Blvd. and Kenmore Ave.	5 highrise buildings nearby
24	Wilshire Blvd. and Ardmore Ave.	5 highrise buildings nearby
25	Sixth St. and Wilton Pl.	Chevron gas station at Kingsley Dr. and Wilshire Blvd., 4 highrise buildings nearby
26	Sixth St. and Wilton Pl.	Oasis gas station near St. Andrew and Wilshire Blvd.
27	Wilshire Blvd. and Norton Ave.	
28	Wilshire Blvd. and Arden Blvd.	
29	Wilshire Blvd. and Muirfield Rd.	2 highrise buildings nearby
30	Wilshire Blvd. and Orange Dr.	Highrise building nearby
31	Sixth St. and Dunsmuir Ave.	
32	Spaulding Ave. and Sixth St.	Highrise building nearby, pockets of gas in tar pits at Hancock Park

[1] Numbers are referenced to Site Plan (Aooendix 4) and Resistivity Table (Appendix 3)

APPENDIX 5

SURFACE SOIL RESISTIVITY TEST SITE LOCATIONS AND COMMENTS (SCRTD)

TEST SITE[1]	LOCATION	COMMENTS
33	Sixth St. and Fairfax Ave.	Powerline gas station nearby
34	Fifth St. and Crescent Heights Blvd.	
35	Fairfax Ave. and Third St.	
36	Beverly Blvd. and Genesee Ave.	Word Gas Station at Beverly Blvd. and
37	Fairfax Ave. and Rosewood Ave.	
38	Fairfax Ave. and Melrose Ave.	
39	Fairfax Ave. and Willoughby Ave.	
40	Fairfax Ave. and Norton Ave.	
41	Fairfax Ave. and Fountain Ave.	
42	Fairfax Ave. and Sunset Blvd.	Arco and Mobil gas stations at corner
43	Sunset Blvd. and Ogden Dr.	
44	Spaulding Ave. and DeLongpre Ave.	
45	Vista St. and Hawthorn Ave.	
46	Fuller Ave. and Hawthorn Ave.	
47	Formosa Ave. and Marshfield way	
48	Orange Dr. and Sunset Blvd.	

[1] Numbers are referenced to Site Plan (Appendix 4) and Resistivity Table (Appendix 3)

APPENDIX 5

SURFACE SOIL RESISTIVITY TEST SITE LOCATIONS AND COMMENTS (SCRTD)

TEST SITE[1]	LOCATION	COMMENTS
49	Highland Ave. and Leland Way	
50	McCadden Pl. and Sunset Blvd.	
51	Wilcox Ave. and DeLongpre Ave.	
52	Yucca St. and Cahuenga Blvd.	
53	Whitley and Cahuenga Blvd.	
54	San Marco Dr. and Cahuenga Blvd.	
55	Highland Ave. and Hollywood Freeway	
56	Macapa Dr. and Mulholland Dr.	
57	Pacific View Ter.	
58	Woodrow Wilson Dr. and Sycamore	
59	Woodrow Wilson Dr. and Passmore	
60	Passmore and Oakshire	
61	Oakley and Glen Hill	
62	Cahuenga and Fredonia	
63	Cahuenga and Lankershim	
64	Willow Crest and Valley Heart	Universal Studio building highrise nearby

[1] Numbers are referenced to Site Plan (Appendix 4) and Resistivity Table (Appendix 3)

MTA LIBRARY

APPENDIX 5

SURFACE SOIL RESISTIVITY TEST SITE LOCATIONS AND COMMENTS (SCRTD)

TEST SITE[1]	LOCATION	COMMENTS
65	Whipple St.	
66	Lankershim and Riverside	Highrise building along Lankershim between Riverside and Camarillo
67	Vineland and Blix	
68	Hesby and Vineland	
69	Otsego and Klump Ave.	
70	Lankershim and Weddington	
71	Fair Ave. and Cumpston	

[1] Numbers are referenced to Site Plan (Appendix 4) and Resistivity Table (Appendix C)

APPENDIX 6

SURFACE SOIL RESISTIVITIES IN VICINITY OF TRANSIT YARD

(SCRTD)

Villalobos & Associates Inc.

Los Angeles CA
Folder #6
RCS

Consulting Engineer
3995 Smith Street • Union City, CA 9458
Telephone (415) 489-966

November 30, 1982

Job #8216

Mr. Donald M. Waters
Waters Consultants
7807 Convoy Court, Suite 110
San Diego, CA 92111

SUBJECT: Southern California Rapid Transit District

Dear Don:

A soil resistivity survey was performed at the location of the proposed main yard and shops in Downtown Los Angeles. Data were gathered by Alan Mulkey, Michael Partenheimer, and Fernando Rodriguez over a three (3) day period from October 27 to October 29, 1982.

Enclosed are the following:

- Soil resistivity measurements for twenty-one (21) sites
- A list of locations of possible interference
- Reference drawings showing location of the test and interference sites
- Photographs of the project area
- Two (2) sheets of the 1941 Los Angeles River Improvements Project provided by the Los Angeles County Flood Control District

Permits for access to the easements along the banks of the Los Angeles River are granted by the Army Corps of Engineers. Contact Rick Grover at (213) 688-5635 for more information.

Wenner resistivity measurements in the easement would be of little value due to interference from the Chevron 8-inch pipeline which is within the twenty (20) foot wide easement.

Please contact me if you have any questions regarding the survey.

Very truly yours,

VILLALOBOS & ASSOCIATES

Jose L. Villalobos
President

Enclosures

APPENDIX 6

SURFACE SOIL RESISTIVITIES IN VICINITY OF TRANSIT YARD (SCRTD)

Soil Resistance (Ohm) and Resistivity (Ohm-Cm)

Test Site	DEPTH, Feet													
See	2.6		5.3		7.8		10.5		15.7		25.0		50.0	
Note 3	Ω	Ω-cm	Ω	Ω-cm	Ω	Ω-cm	Ω	Ω-cm	Ω	Ω-cm	Ω	Ω-cm	Ω	Ω-cm
1	20.0	9,958	16.0	16,239	15.0	22,406	15.0	30,161	10.0	30,066	3.9	18,671	See Note 2	
2	860.0	428,194	46.0	46,688	--	--	5.3	10,657	--	--	2.2	10,533	See Note 5	
3	70.0	34,853	23.0	23,344	13.0	19,418	5.0	10,054	See	Note	5			
4	21.0	10,456	16.0	16,239	12.0	17,924	8.75	17,594	7.0	21,046	1.70	8,139	0.25	2,394
5	215.0	107,049	96.5	97,943	67.5	100,825	39.5	79,425	18.0	54,118	7.0	33,513	2.50	23,93[illegible]
6	22.0	10,954	11.5	11,672	7.1	10,605	4.9	9,853	2.4	7,216	See	Note	2	
7	74.0	36,845	19.5	19,792	4.6	6,871	2.1	4,223	1.8	5,412	0.0265	127	See Note 5	
8	70.0	34,853	50.0	50,748	43.0	64,229	35.5	71,382	16.5	49,608	See	Note	2	
9	590	293,761	40.0	40,598	13.5	20,165	170	341,828	1,125	3,382,369	See	Notes	2 & 5	
9A	295	146,881	17.0	17,254	53.0	79,166	13.0	26,140	40.0	120,262	See	Notes	2 & 5	
10	115.0	57,259	37.0	37,553	15.0	22,406	8.2	16,488	3.8	11,425	See	Note	2	
11	16.5	8,215	12.0	12,179	8.05	12,024	7.55	15,181	2.70	8,118	1.60	7,660	1.85	17,714
12	64.0	31,866	31.0	31,463	13.0	19,418	11.0	22,118	1.60	4,811	See	Note	2	
13	200	99,580	76.5	77,644	30.0	44,811	22.0	44,237	9.3	27,961	See	Note	2	
14	32.0	15,933	8.75	8,881	2.75	4,108	0.685	1,377	0.585	1,759	See	Notes	2 & 4	
15	28.5	14,190	12.0	12,179	7.55	11,277	6.35	12,768	2.95	8,869	1.30	6,224	0.028	26[illegible]

[illegible] $\rho = 191.5\ Rd$

where: ρ = resistivity, Ω-cm
R = resistance, Ω
d = pin spacing, feet

[illegible] Not enough room to perform test

[3] Numbers are referenced to the site plan, Figures 4.1, 4.2, and 4.3

[4] Soil very moist

[5] Too low to read

Job #8216
AGM 11/82

APPENDIX 6

SURFACE SOIL RESISTIVITIES IN VICINITY OF TRANSIT YARD (SCRTD)

Soil Resistance (Ohm) and Resistigity (Ohm-Cm)

Test Site	DEPTH, Feet													
See	2.6		5.3		7.8		10.5		15.7		25.0		50.0	
Note 3	Ω	Ω-cm	Ω	Ω-cm	Ω	Ω-cm	Ω	Ω-cm	Ω	Ω-cm	Ω	Ω-cm	Ω	Ω-cm
16	120.0	59,748	47.5	48,210	31.0	46,305	17.5	35,188	6.10	18,340	See	Note	2	
17	62.0	30,870	26.5	26,896	16.0	23,899	11.5	23,124	3.10	9,320	4.95	23,698	See Note 2	
18	55.0	27,385	20.0	20,299	7.15	10,680	2.50	5,027	0.575	1,729	See	Notes	2 & 5	
19	23.5	11,701	4.95	5,024	1.85	2,763	1.10	2,212	0.415	1,248	See	Note	5	
20	3.80	1,892	2.15	2,182	1.25	1,867	0.615	1,237	0.320	962	0.180	862	0.130	1,245
21	4.70	2,340	2.15	2,182	1.55	2,315	1.20	2,413	0.55	1,654	0.42	2,011	See Note 2	

[1] $\rho = 191.5\ Rd$

where: ρ = resistivity, Ω-cm
R = resistance, Ω
d = pin spacing, feet

[2] Not enough room to perform test

[3] Numbers are referenced to the site plan, Figures 4.1, 4.2, and 4.3

[4] Soil very moist

[5] Too low to read

[*] See Note 4

JOB #8216
AGM 11/82

PLATE I

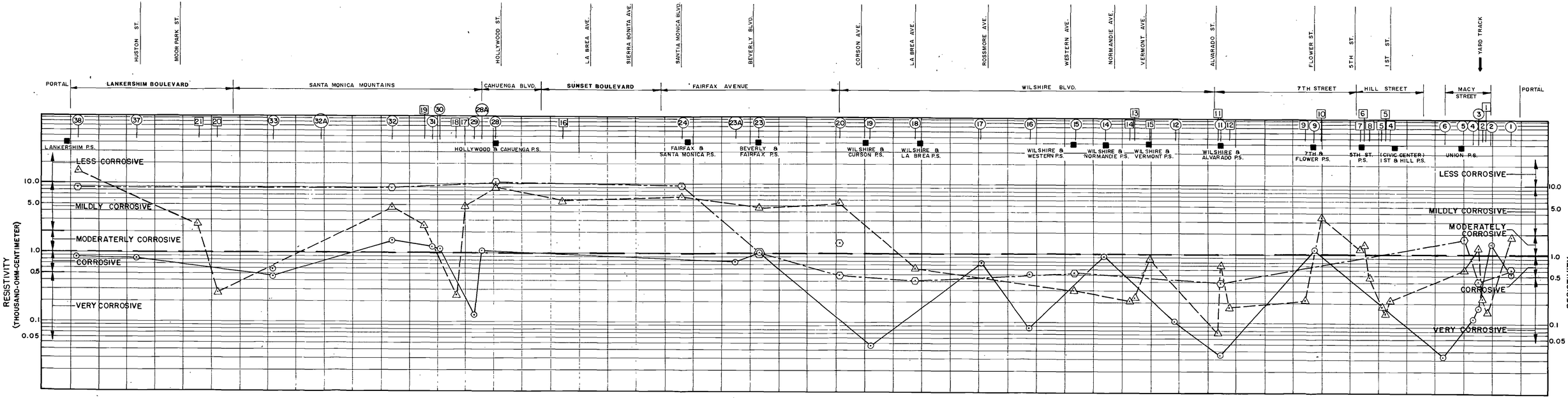

RESISTIVITIES

- GROUND WATER
- 0 - 100' SOIL DEPTH
- 100'+ SOIL DEPTH

MTA LIBRARY

PLATE II

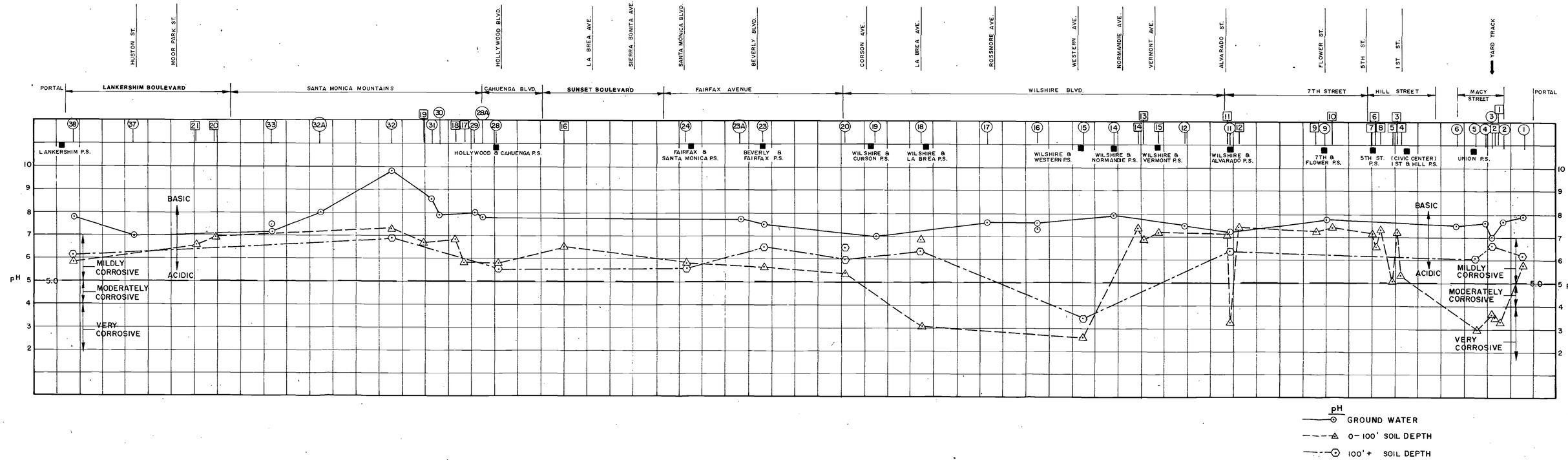
HUNTON ST.
MOOR PARK ST.
HOLLYWOOD BLVD.
LA BREA AVE.
SIERRA BONITA AVE.
SANTA MONICA BLVD.
BEVERLY BLVD.
CORSON AVE.
LA BREA AVE.
ROSSMORE AVE.
WESTERN AVE.
NORMANDIE AVE.
VERMONT AVE.
ALVARADO ST.
FLOWER ST.
5TH ST.
1ST ST.
YARD TRACK
PORTAL
LANKERSHIM BOULEVARD
SANTA MONICA MOUNTAINS
CAHUENGA BLVD.
SUNSET BOULEVARD
FAIRFAX AVENUE
WILSHIRE BLVD.
7TH STREET
HILL STREET
MACY STREET
PORTAL
LANKERSHIM P.S.
HOLLYWOOD & CAHUENGA P.S.
FAIRFAX & SANTA MONICA PS.
BEVERLY & FAIRFAX P.S.
WILSHIRE & CURSON P.S.
WILSHIRE & LA BREA P.S.
WILSHIRE & WESTERN PS.
WILSHIRE & NORMANDIE P.S.
WILSHIRE & VERMONT P.S.
WILSHIRE & ALVARADO P.S.
7TH & FLOWER P.S.
5TH ST. P.S.
(CIVIC CENTER) 1ST & HILL PS.
UNION P.S.
pH
BASIC
ACIDIC
MILDLY CORROSIVE
MODERATELY CORROSIVE
VERY CORROSIVE
5.0
GROUND WATER
0- 100' SOIL DEPTH
100'+ SOIL DEPTH

PLATE III

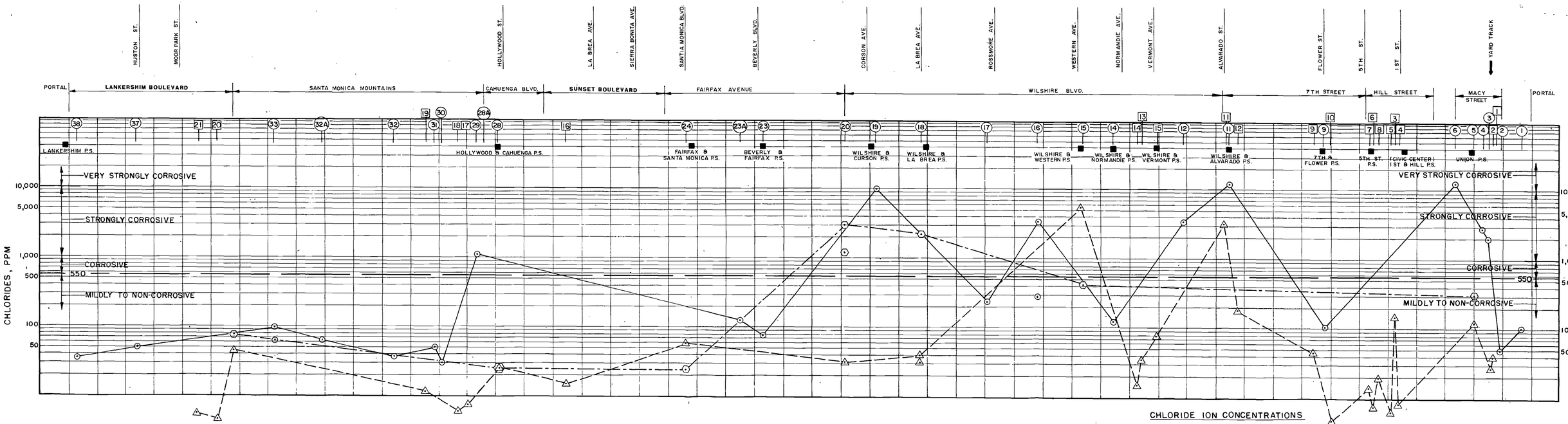

MTA LIBRARY

PLATE IV

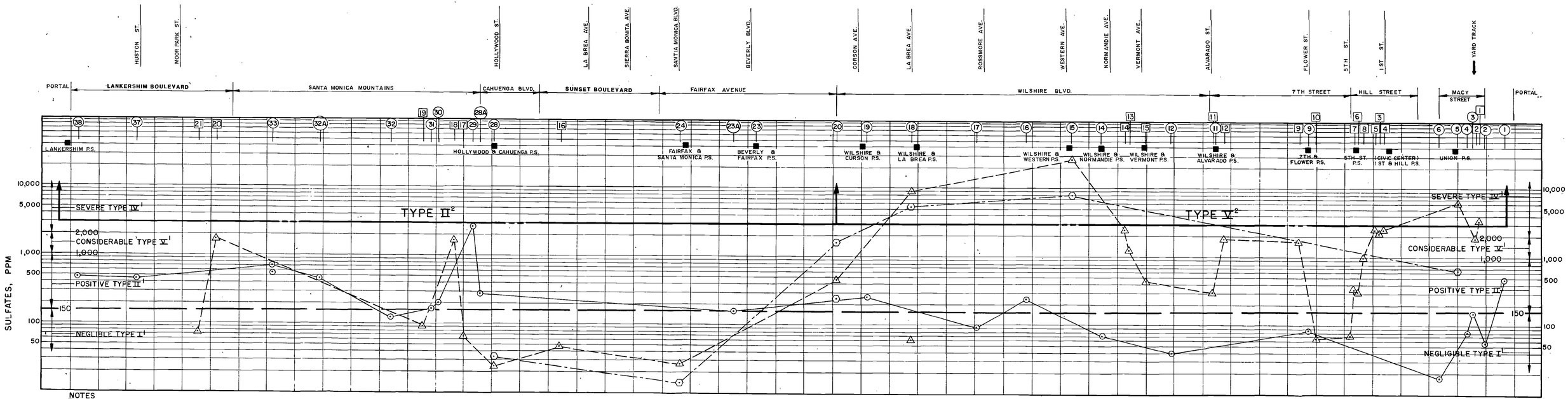

NOTES
1. REFERS TO DEGREE OF ATTACK ON CONCRETE AND USDOI RECOMMENDED CEMENT TYPE. SEE TABLE III IN REPORT.
2. CEMENT TYPE RECOMMENDED FOR THIS AREA.

SULFATE ION CONCENTRATIONS
- GROUND WATER
- 0 - 100' SOIL DEPTH
- 100'+ SOIL DEPTH

PLATE V

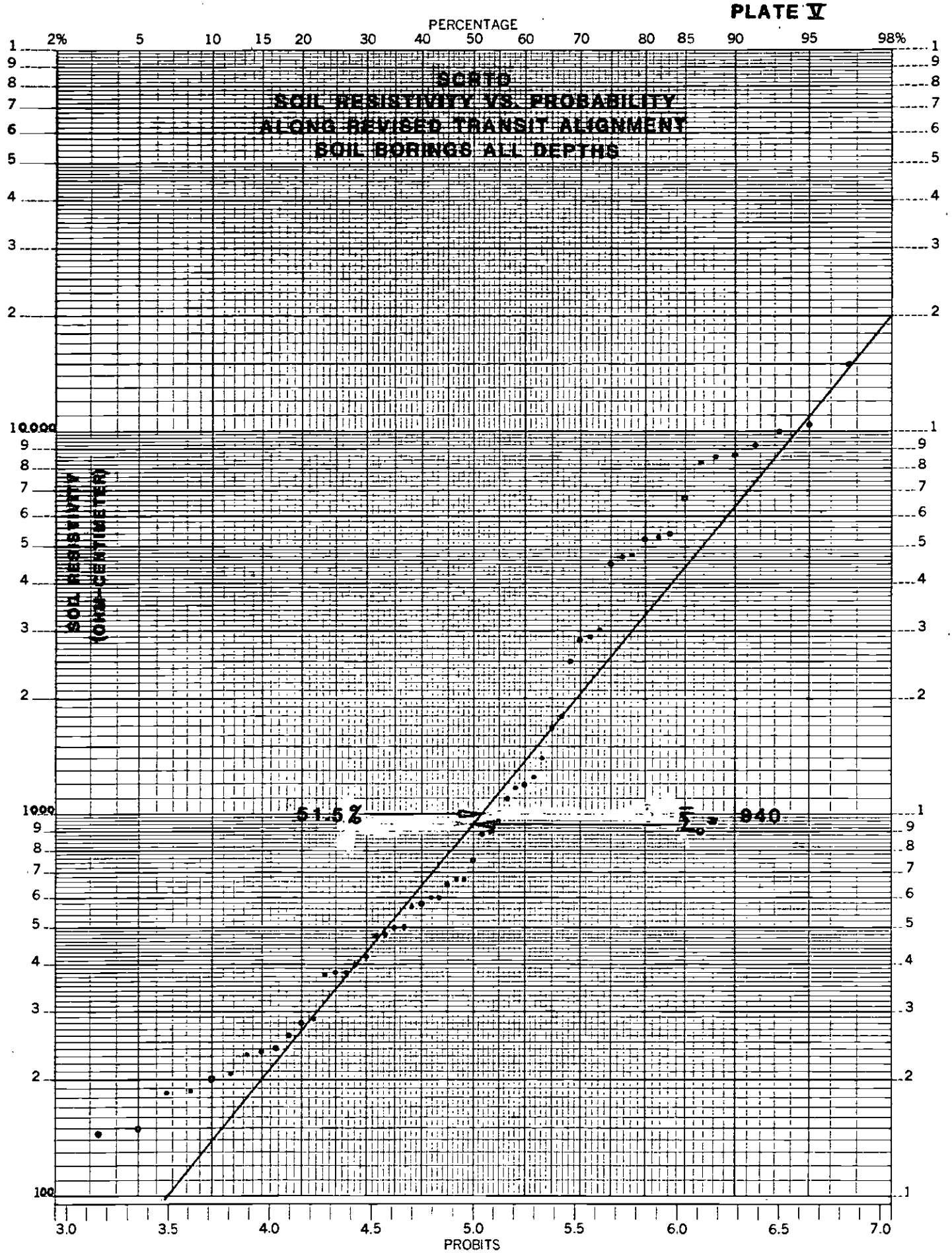

46 8082

K+E PROBABILITY X 3 LOG CYCLES
KEUFFEL & ESSER CO. MADE IN U.S.A.

PLATE VI

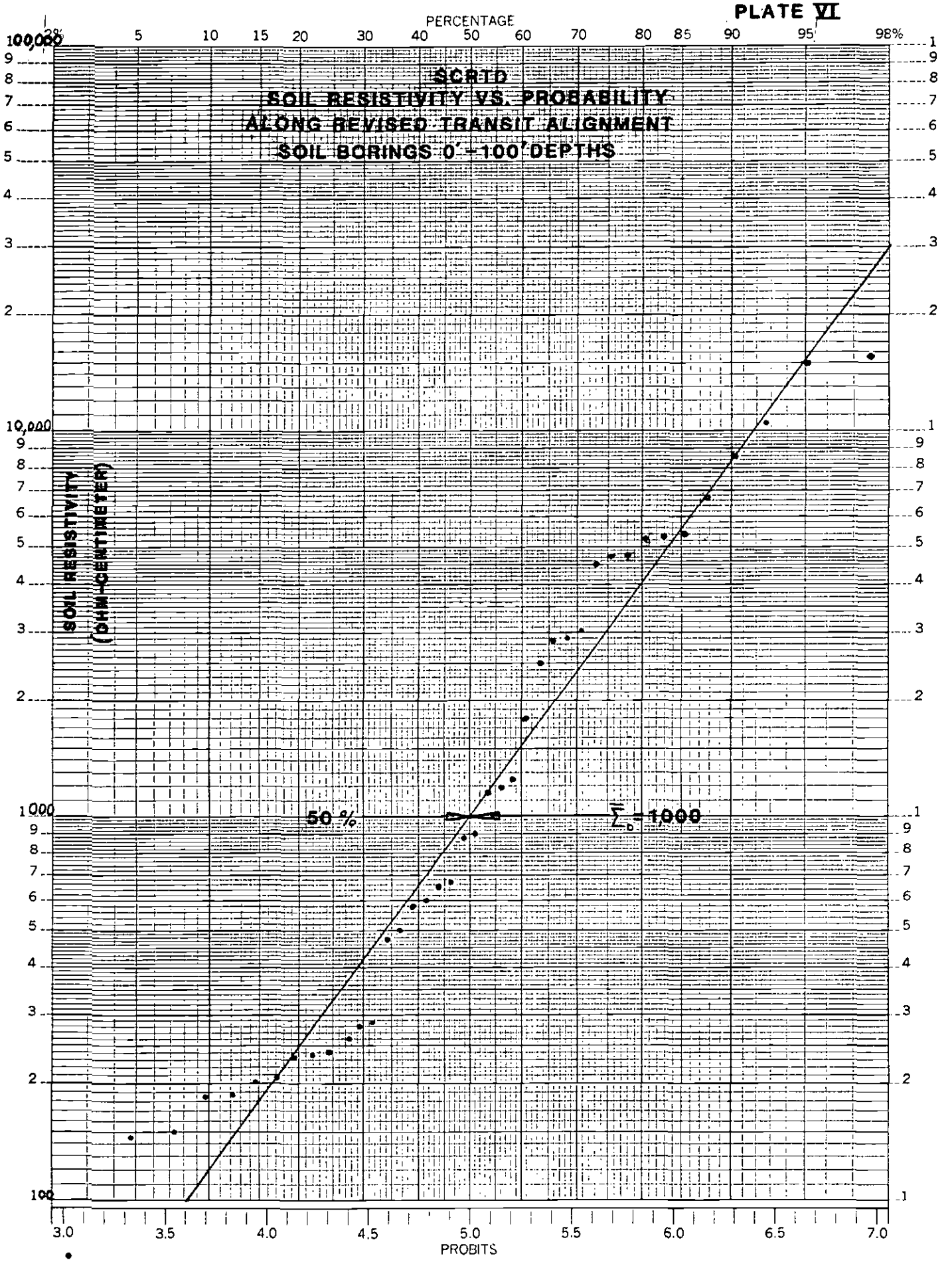

46 8082

K+E PROBABILITY X 3 LOG CYCLES
KEUFFEL & ESSER CO. MADE IN U.S.A.

PLATE VII

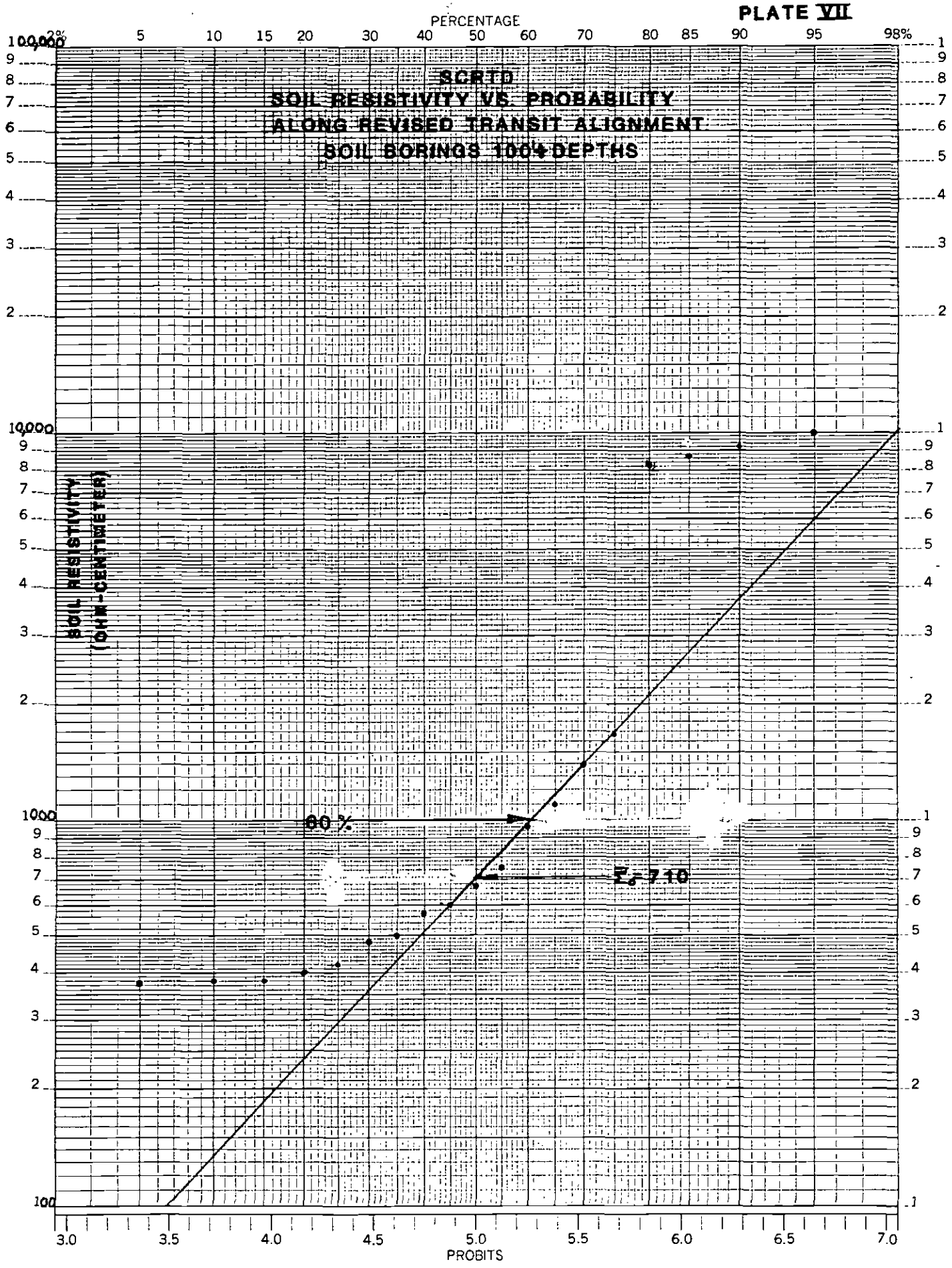

46 8082

K+E PROBABILITY X 3 LOG CYCLES
KEUFFEL & ESSER CO. MADE IN U.S.A.

PLATE VIII A

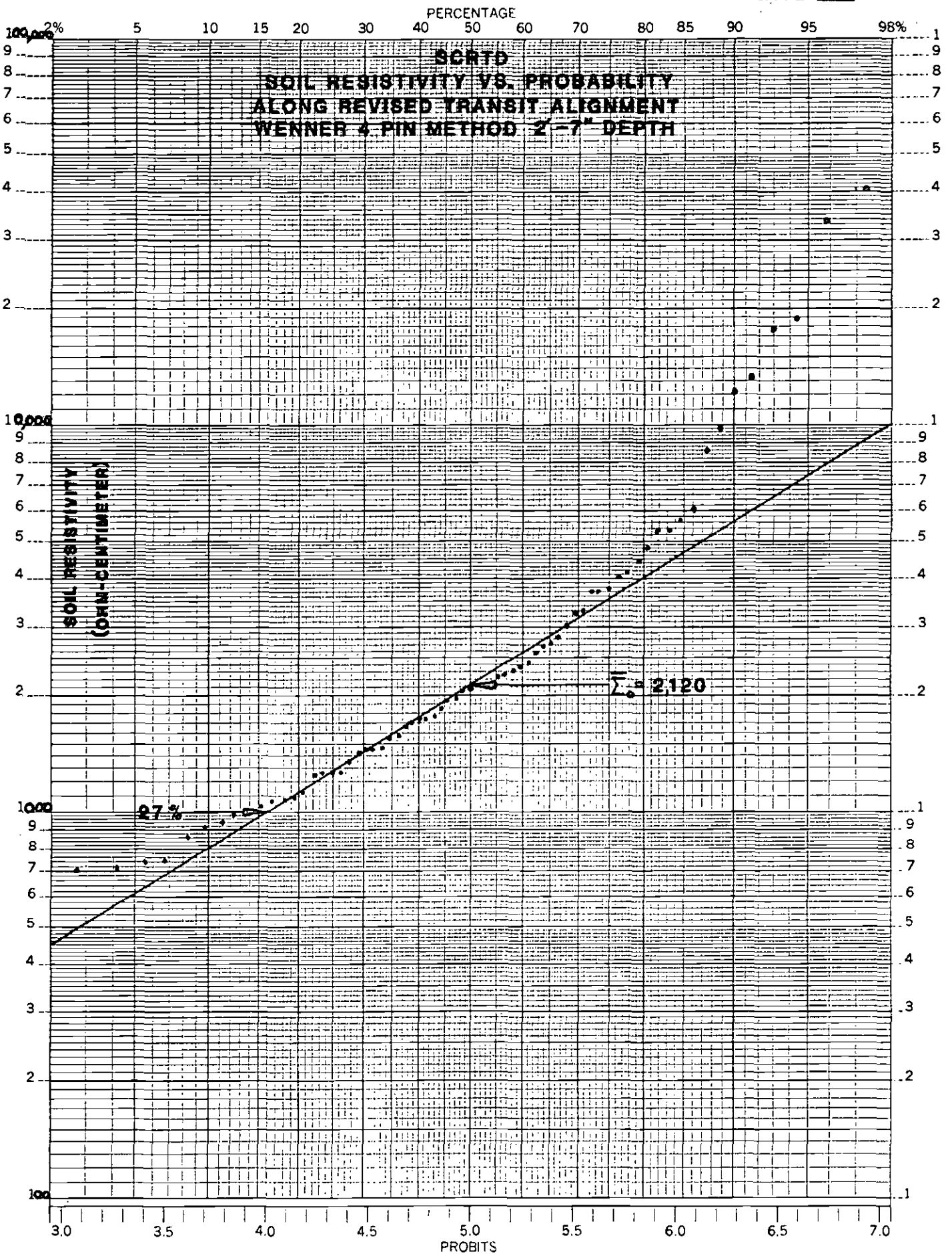

46 8082

K+E PROBABILITY X 3 LOG CYCLES
KEUFFEL & ESSER CO. MADE IN U.S.A.

PLATE VIII B

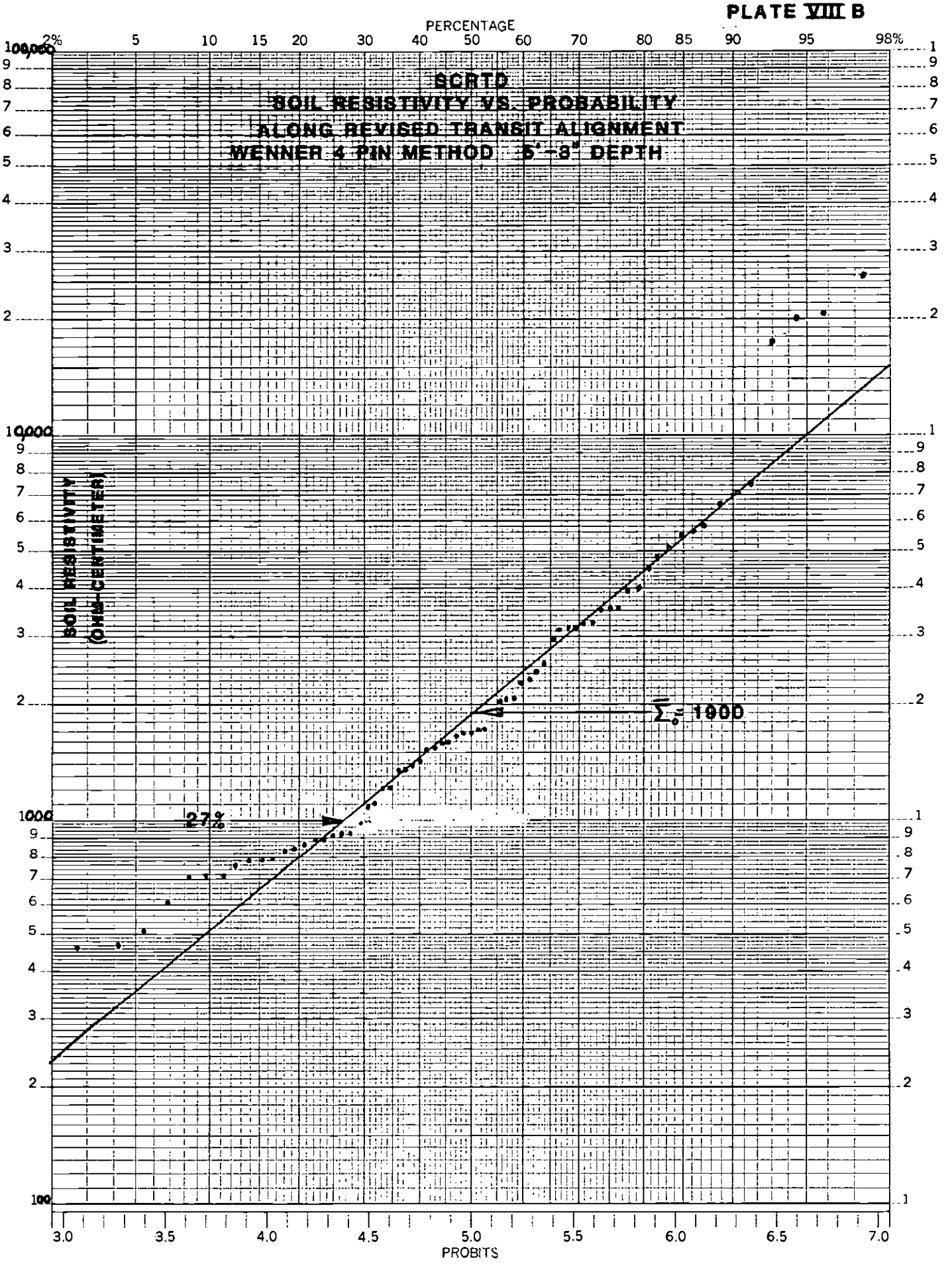

46 8082

K&E PROBABILITY X 3 LOG CYCLES
KEUFFEL & ESSER CO. MADE IN U.S.A.

PLATE VIII C

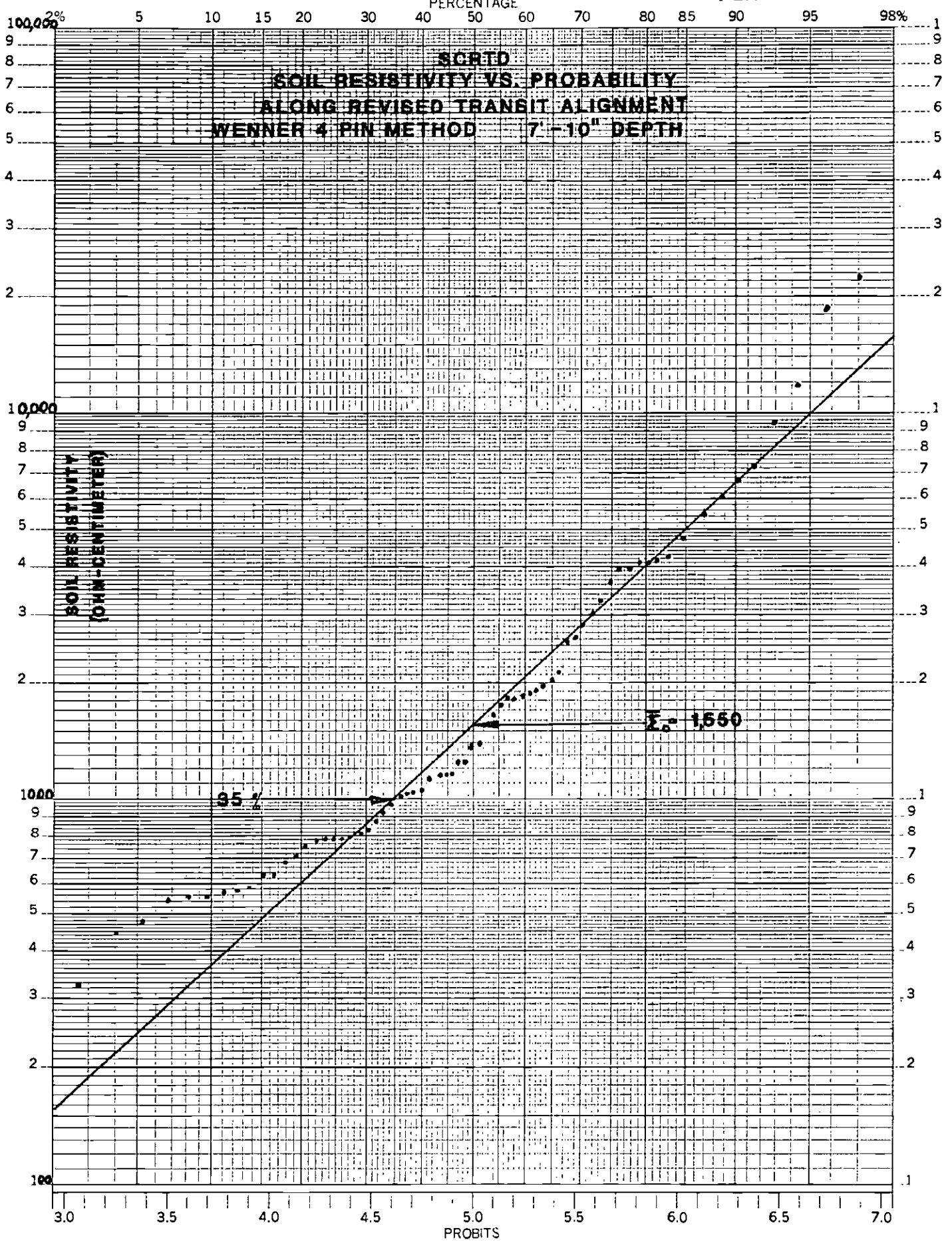

46 8082

KEUFFEL & ESSER CO. MADE IN U.S.A.

PLATE VIII D

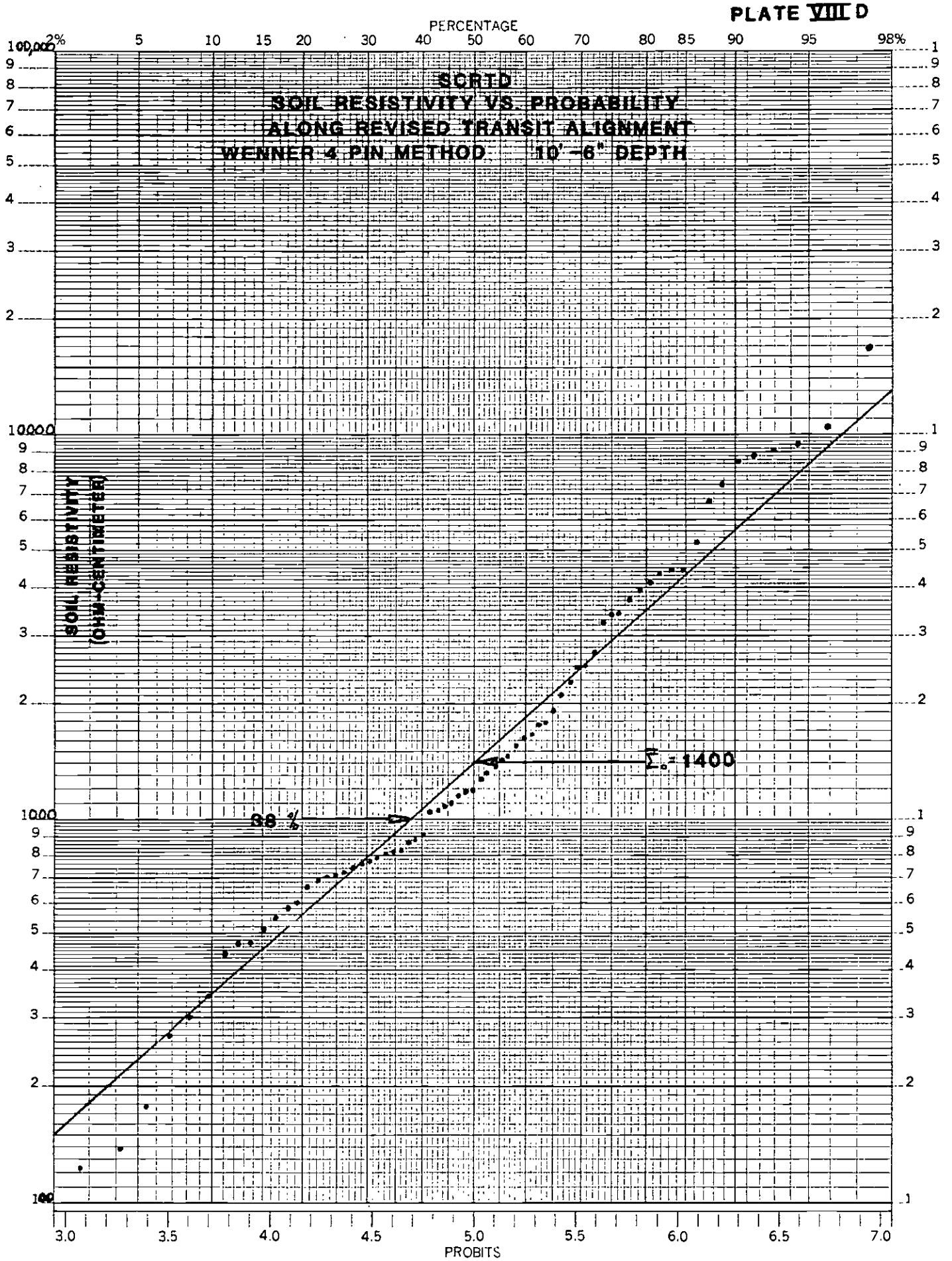

46 8082

K+E PROBABILITY X 3 LOG CYCLES KEUFFEL & ESSER CO. MADE IN U.S.A.

PLATE VIII E

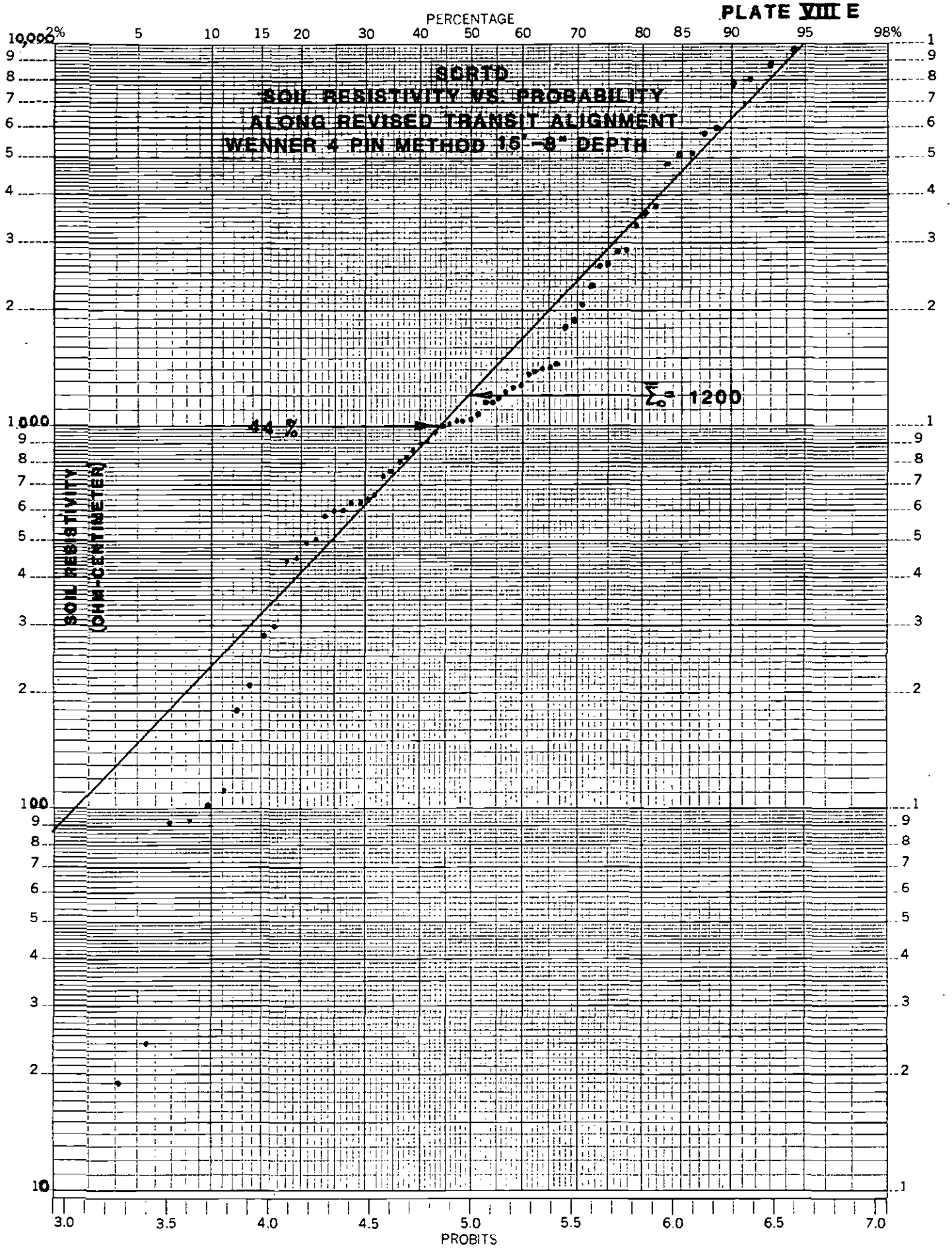

46 8082

K+E PROBABILITY X 3 LOG CYCLES
KEUFFEL & ESSER CO. MADE IN U.S.A.

PLATE VIII F

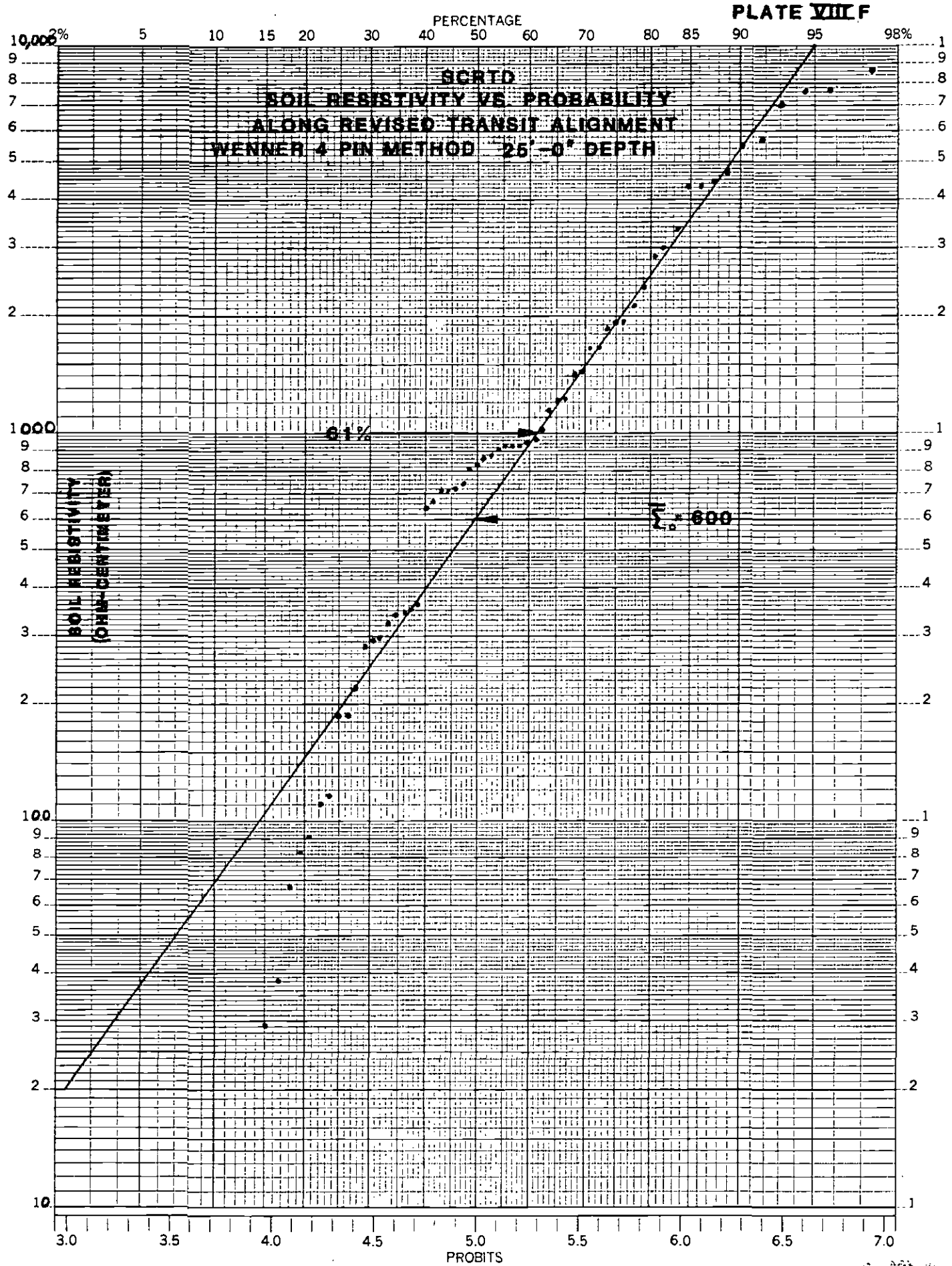

46 8082

K&E PROBABILITY X 3 LOG CYCLES
KEUFFEL & ESSER CO. MADE IN U.S.A.

MTA LIBRARY

PLATE VIII G

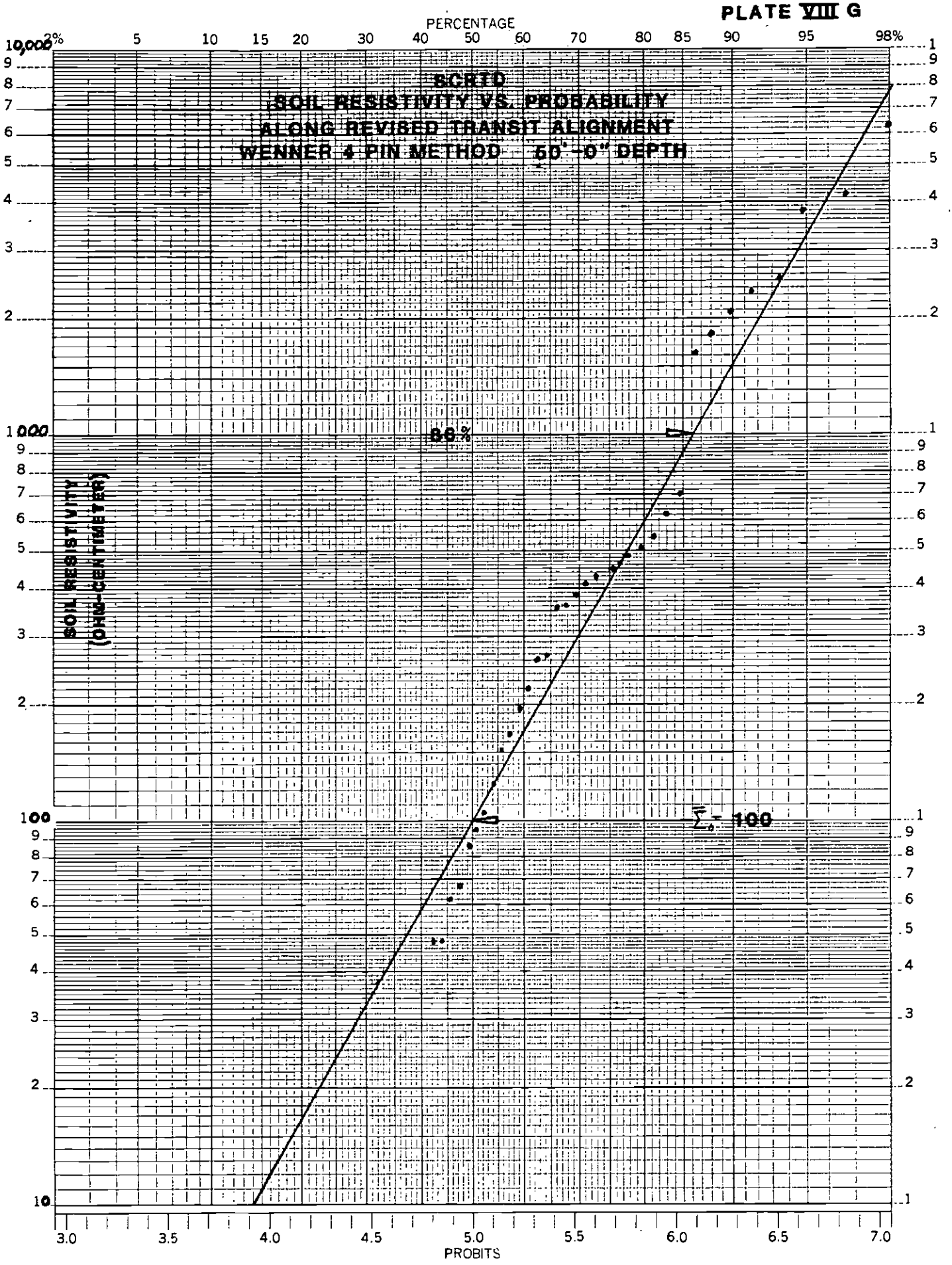

46 8082

PROBABILITY X 3 LOG CYCLES
KEUFFEL & ESSER CO. MADE IN U.S.A.
K&E

PLATE IX

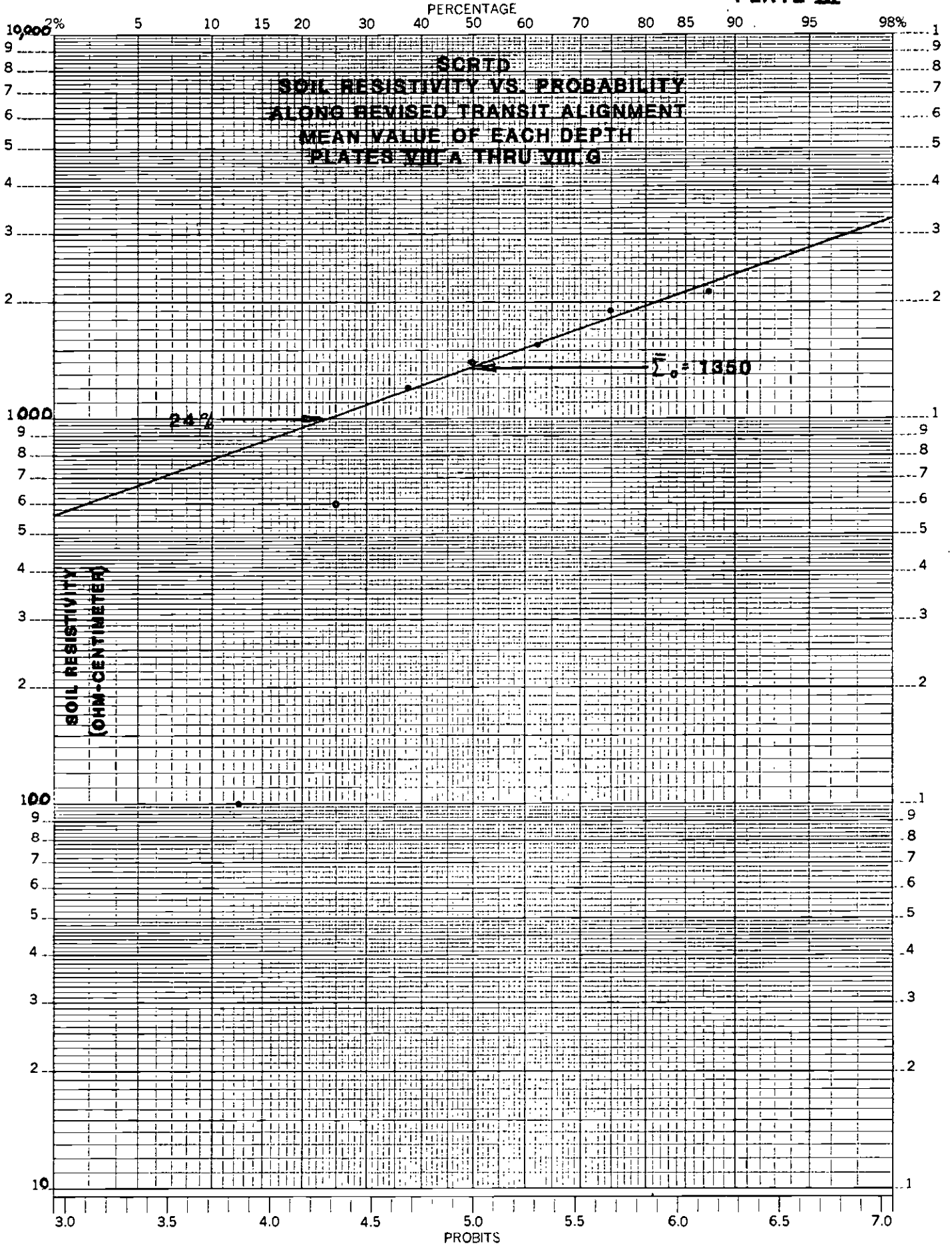

46 8082

K&E PROBABILITY X 3 LOG CYCLES
KEUFFEL & ESSER CO. MADE IN U.S.A.

#112 EXTREME VALUE PROBABILITY

x 3-CYCLE LOGARITHMIC

TEAM Technical and Engineering Aids for Management
SPECIAL PURPOSE GRAPH PAPERS
BOX 25
TAMWORTH, N. H. 03886
TELEPHONE 603-323-8843

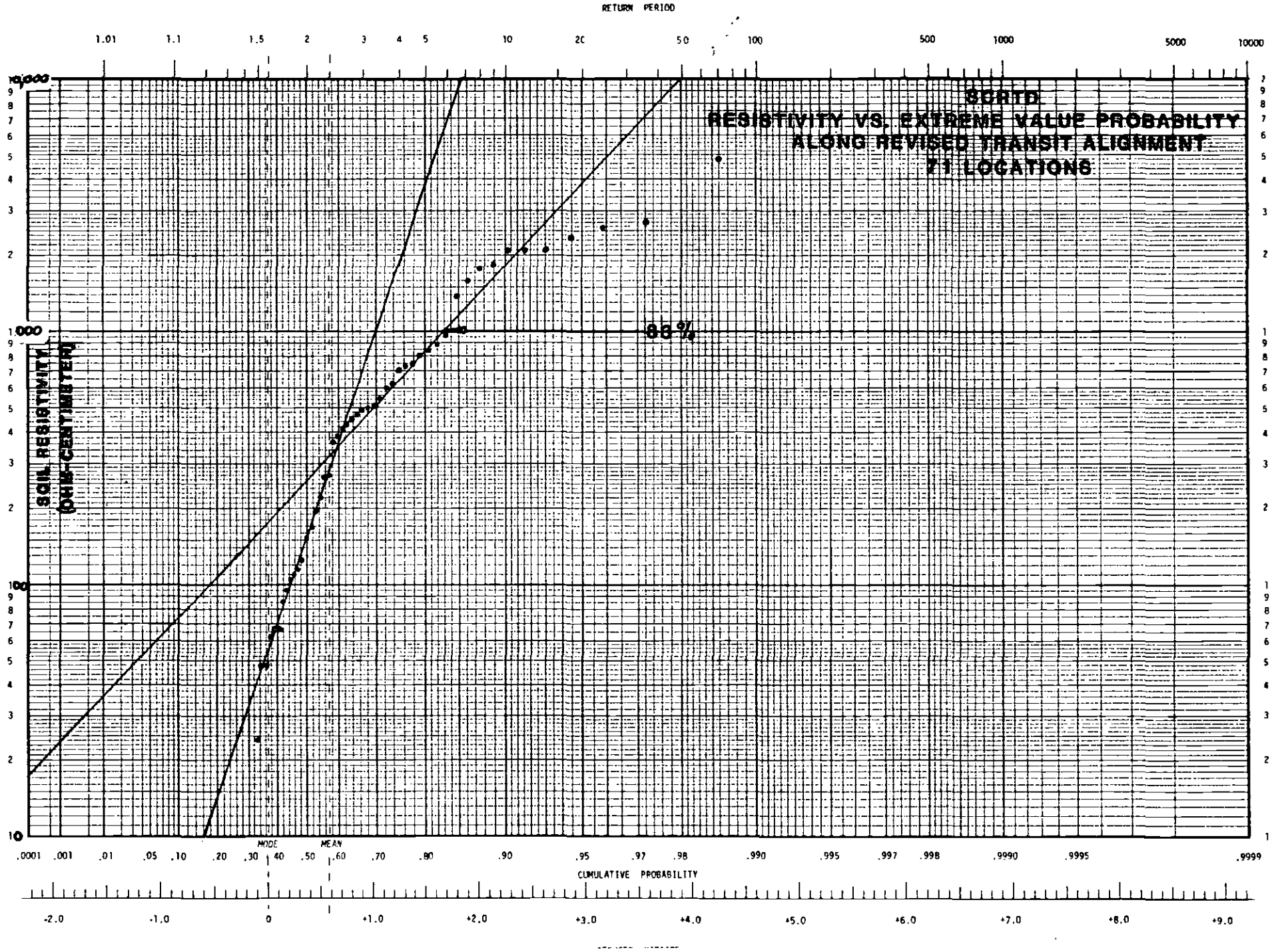

PLATE X

PLATE XI A

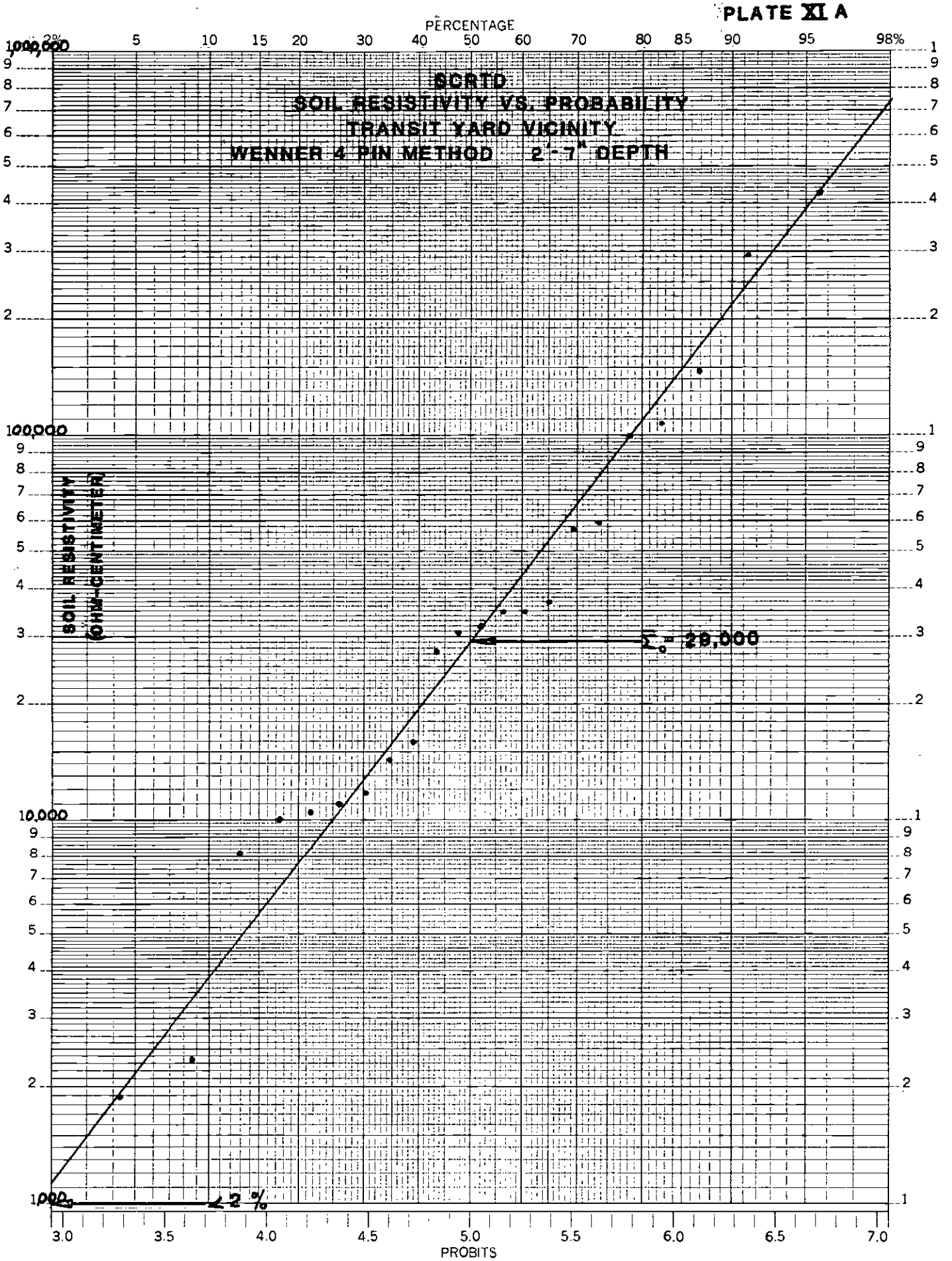

46 8082

K&E PROBABILITY X 3 LOG CYCLES
KEUFFEL & ESSER CO. MADE IN U.S.A.

PLATE XI B

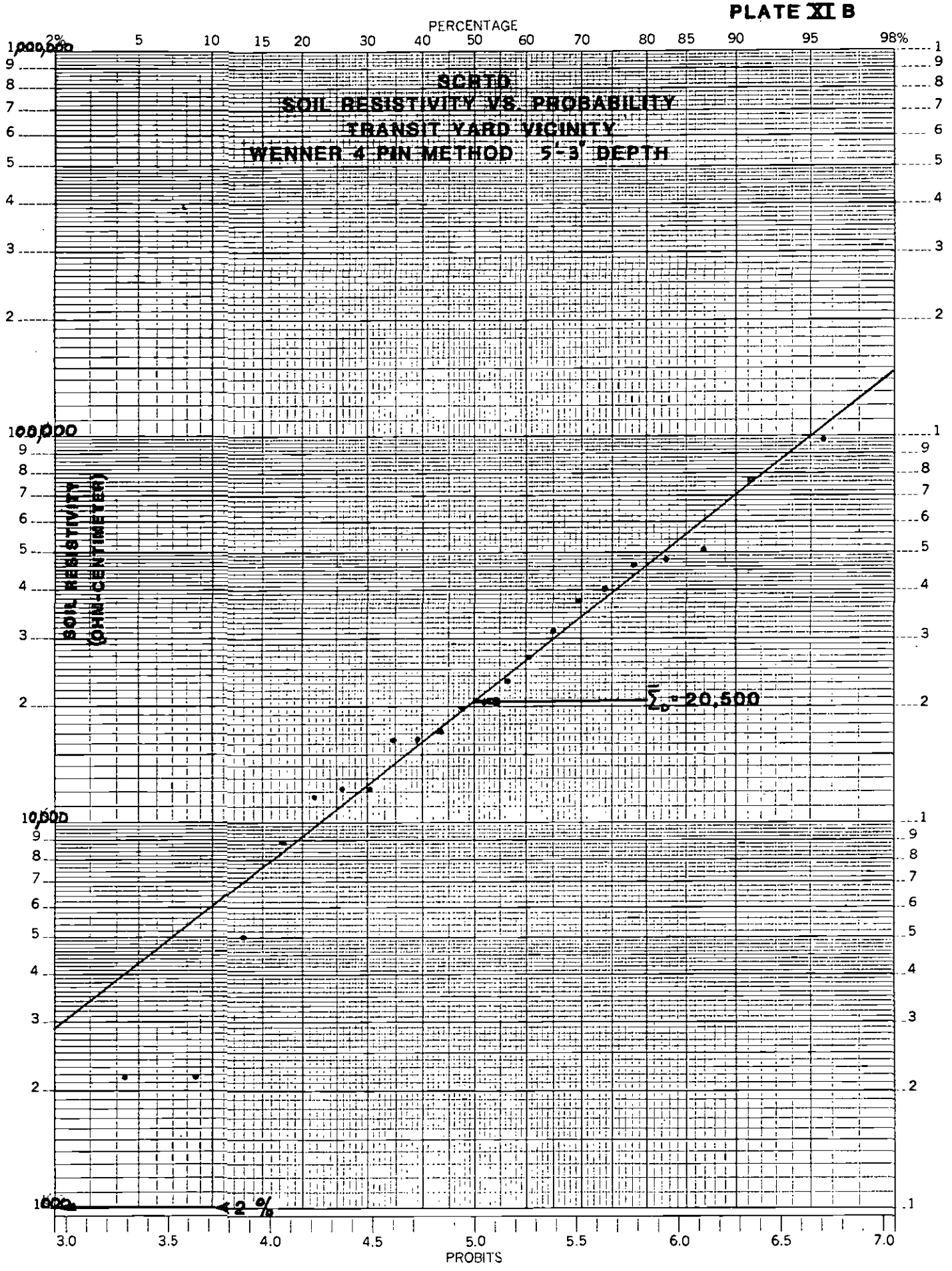

46 8082

K+E PROBABILITY X 3 LOG CYCLES
KEUFFEL & ESSER CO. MADE IN U.S.A.

PLATE XI C

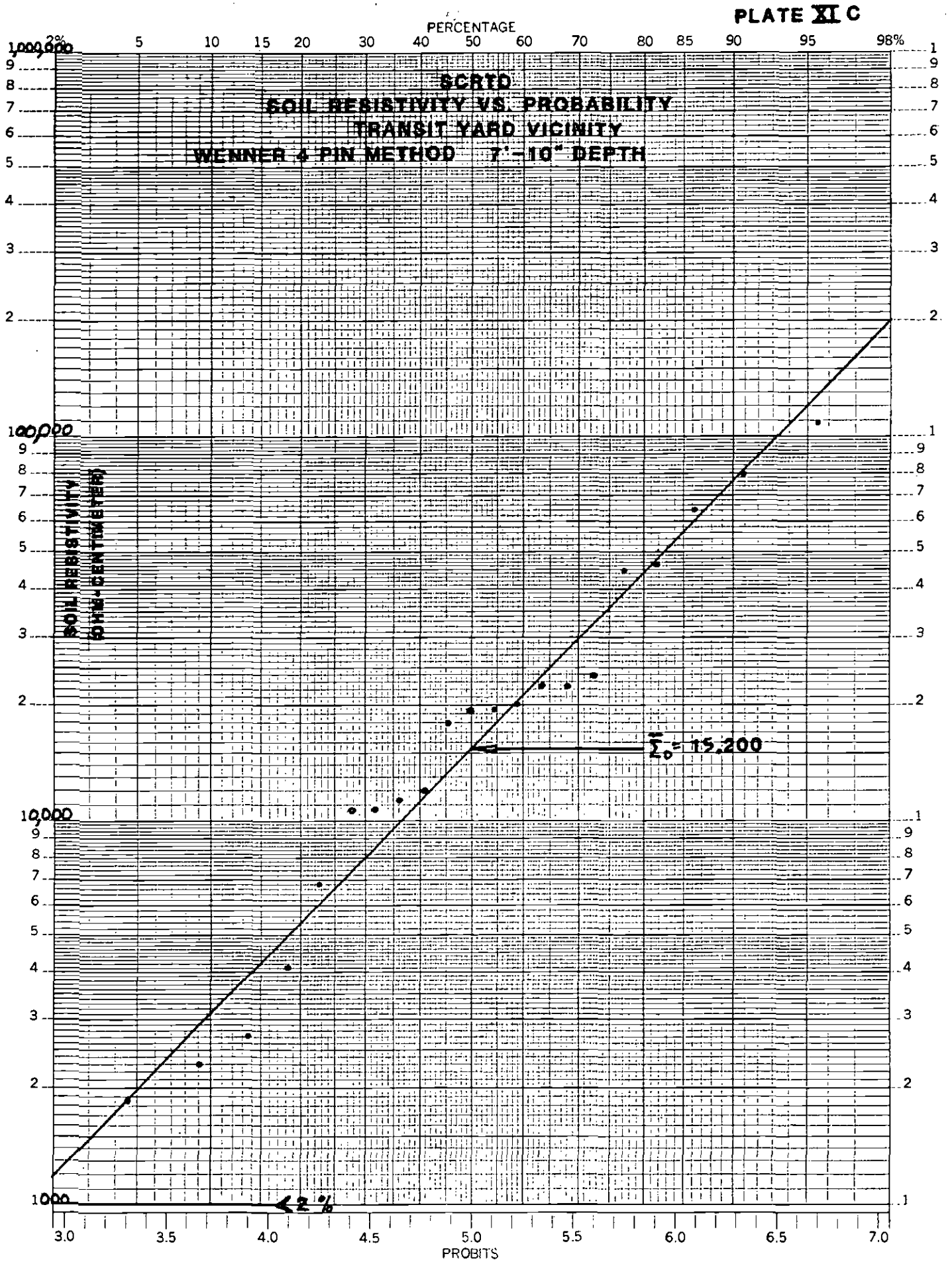

46 8082
K+E KEUFFEL & ESSER CO. MADE IN U.S.A.

PLATE XI D

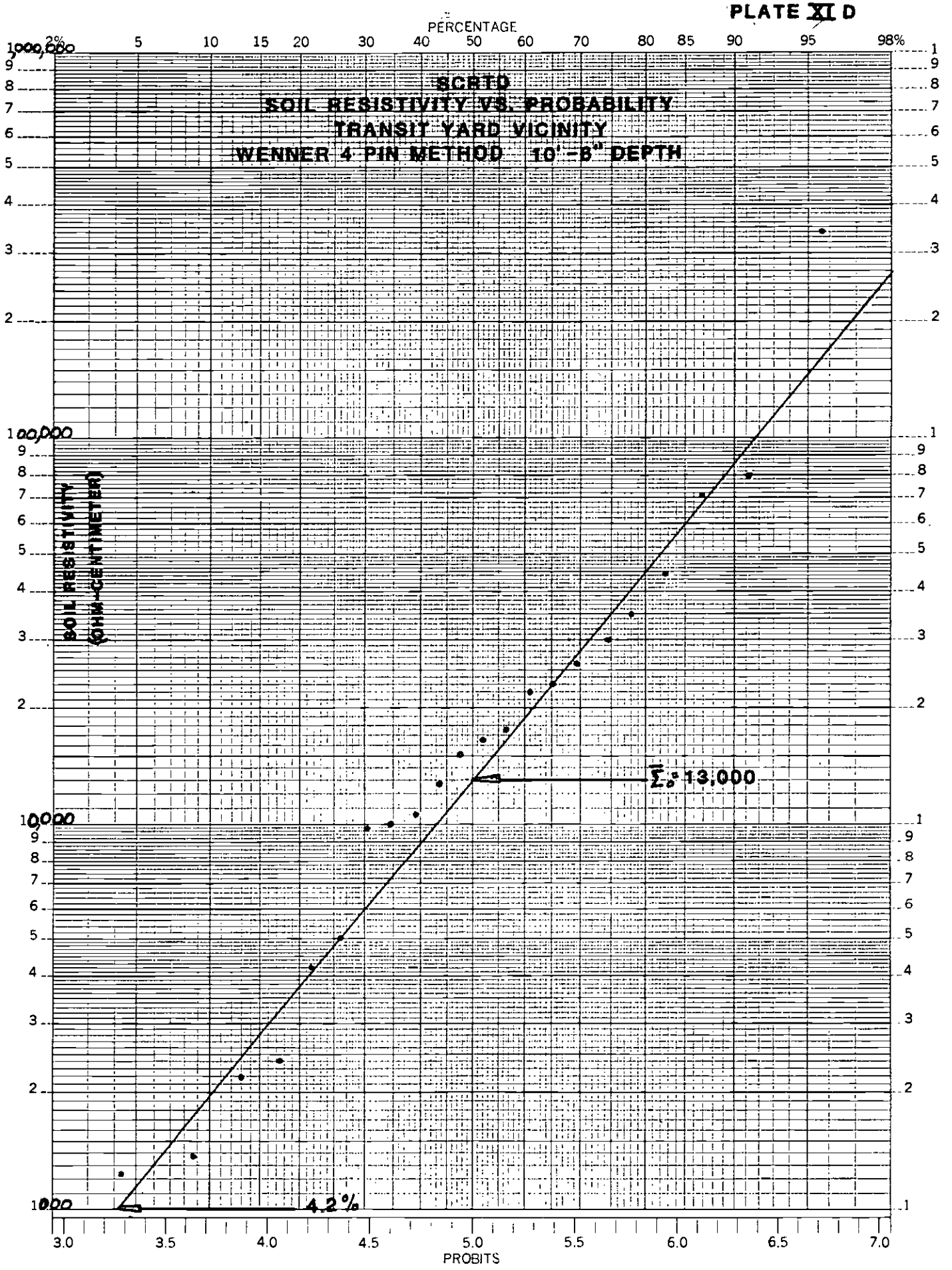

46 8082

K·E PROBABILITY X 3 LOG CYCLES
KEUFFEL & ESSER CO. MADE IN U.S.A.

PLATE XI E

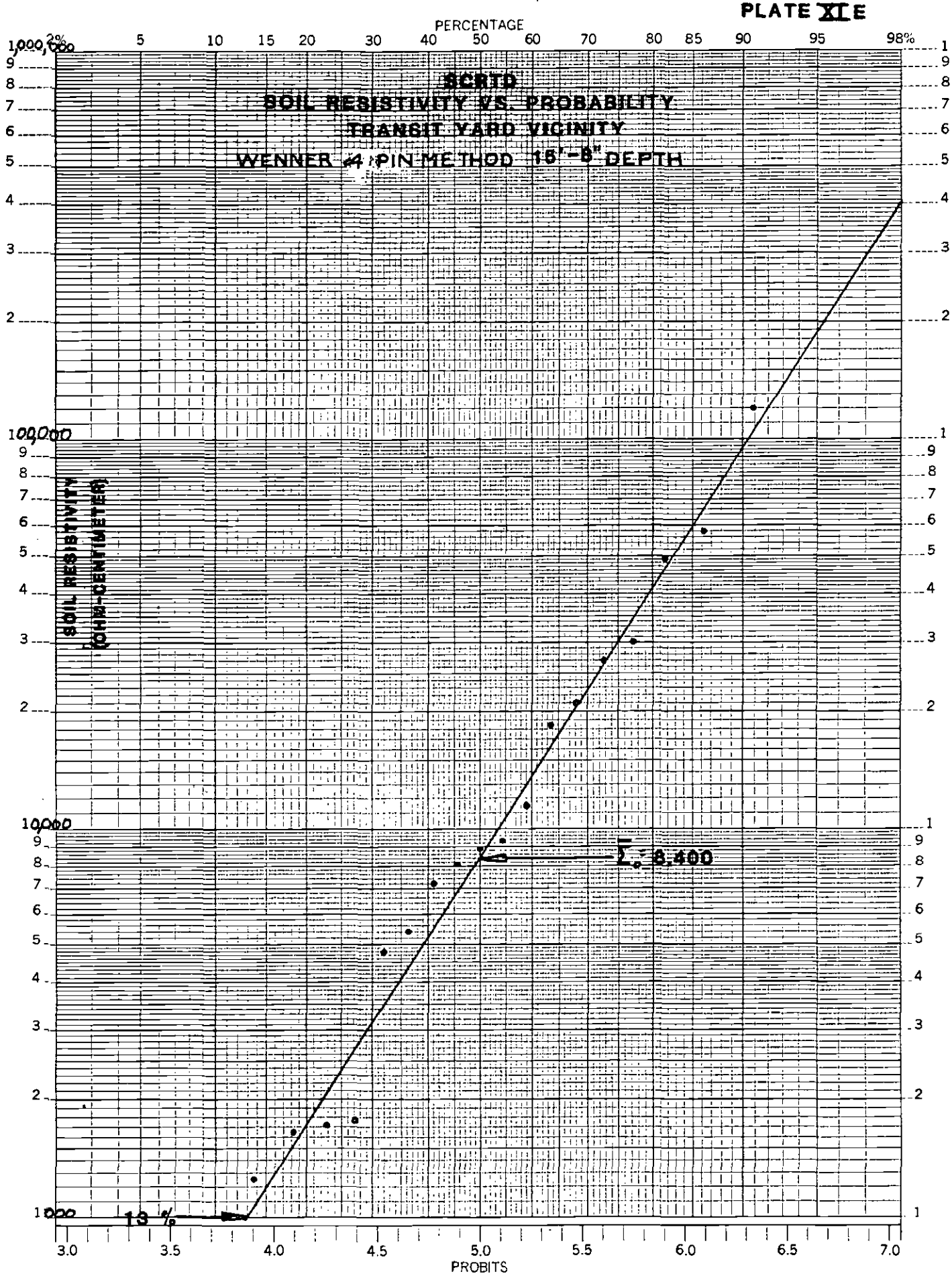

46 8082

K&E PROBABILITY X 3 LOG CYCLES
KEUFFEL & ESSER CO. MADE IN U.S.A.

PLATE XI F

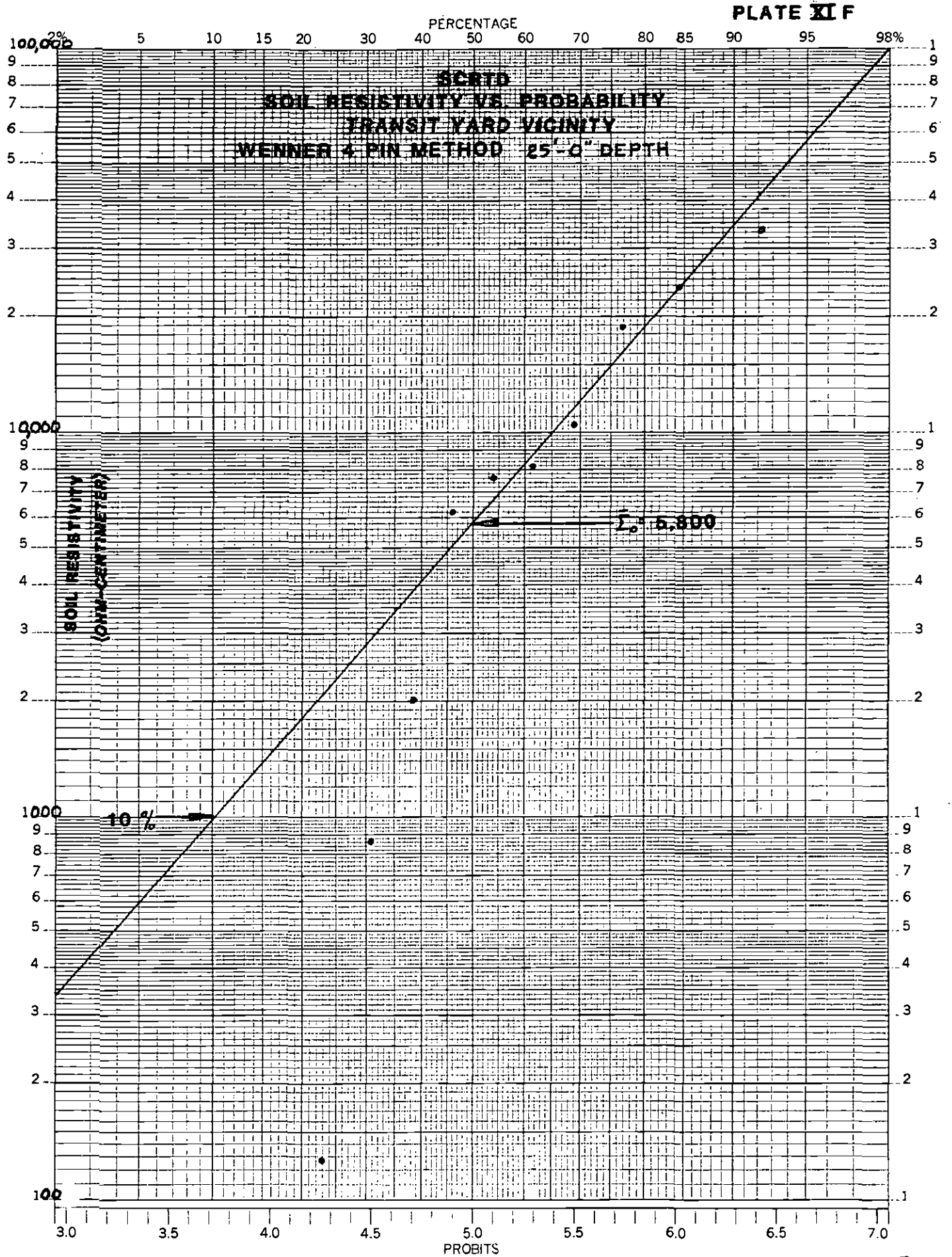

46 8082

K&E PROBABILITY X 3 LOG CYCLES KEUFFEL & ESSER CO. MADE IN U.S.A.

MTA LIBRARY

PLATE XI G

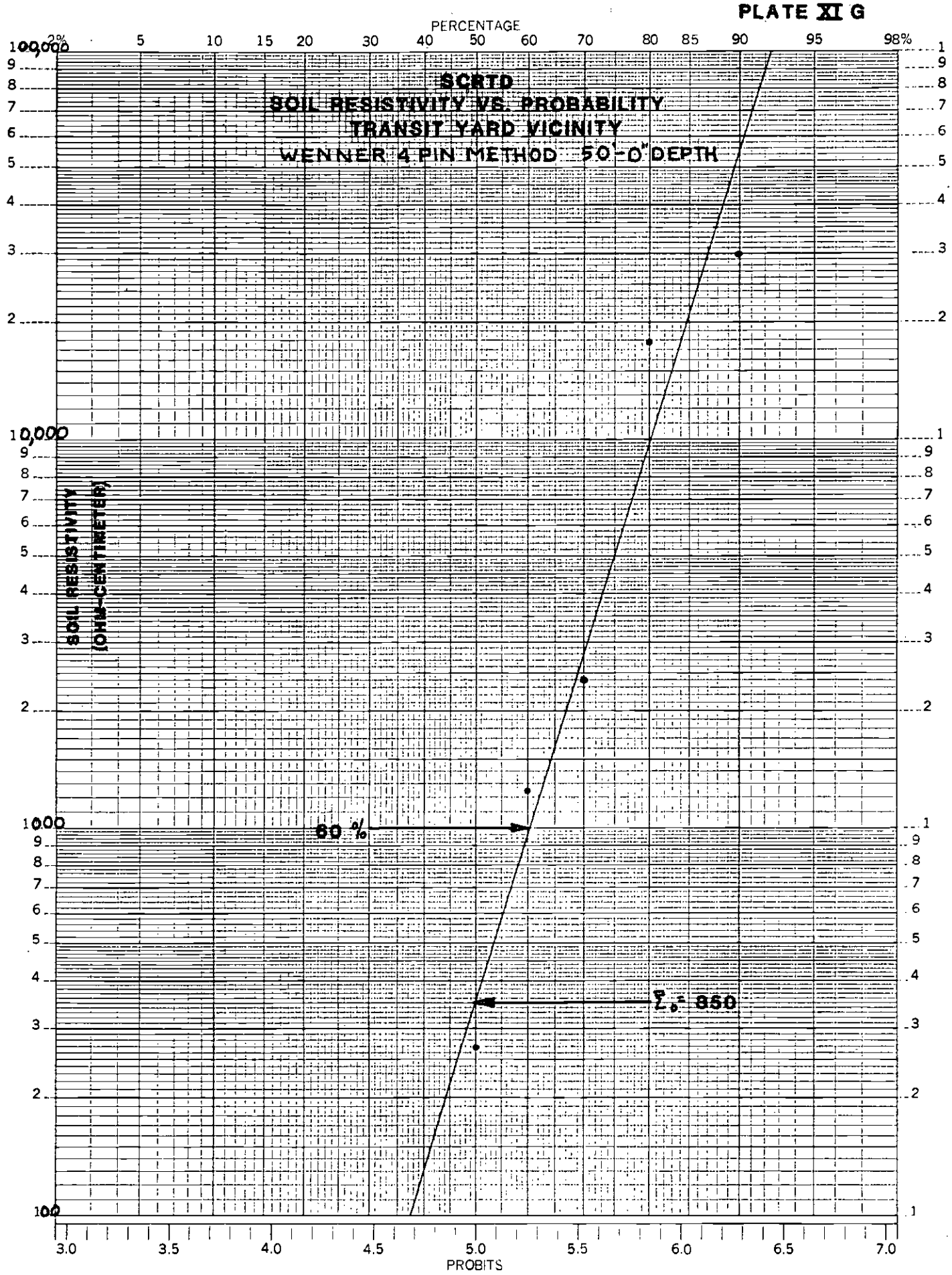

46 8082

K+E PROBABILITY X 3 LOG CYCLES
KEUFFEL & ESSER CO. MADE IN U.S.A.

PLATE XII

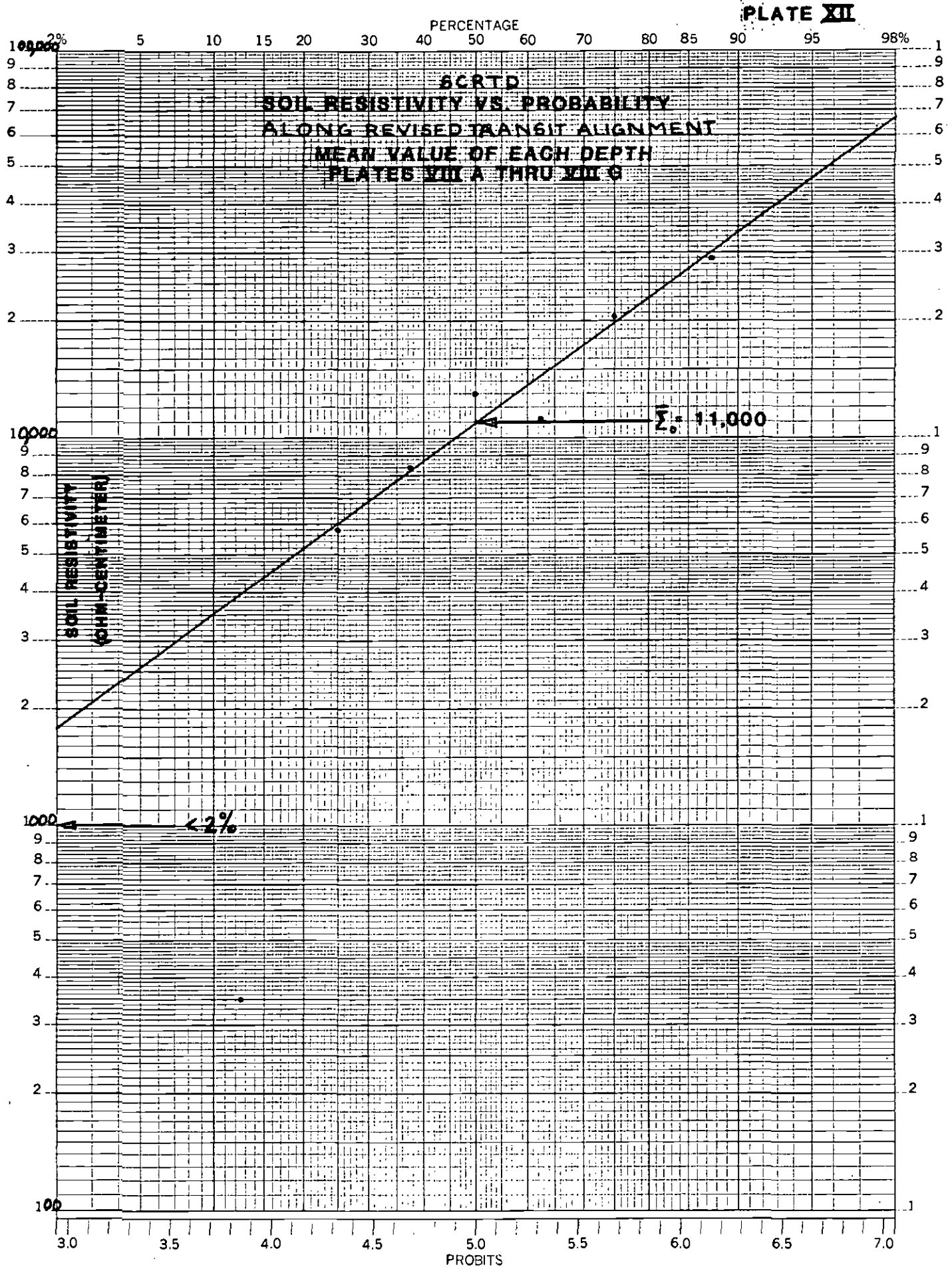

46 8082
KEUFFEL & ESSER CO. MADE IN U.S.A.
PROBABILITY 3 LOG CYCLES

#112 EXTREME VALUE PROBABILITY

x 3-CYCLE LOGARITHMIC

TEAM Technical and Engineering Aids for Management
SPECIAL PURPOSE GRAPH PAPERS
BOX 25
TAMWORTH, N. H. 03886
TELEPHONE 603-323 8843

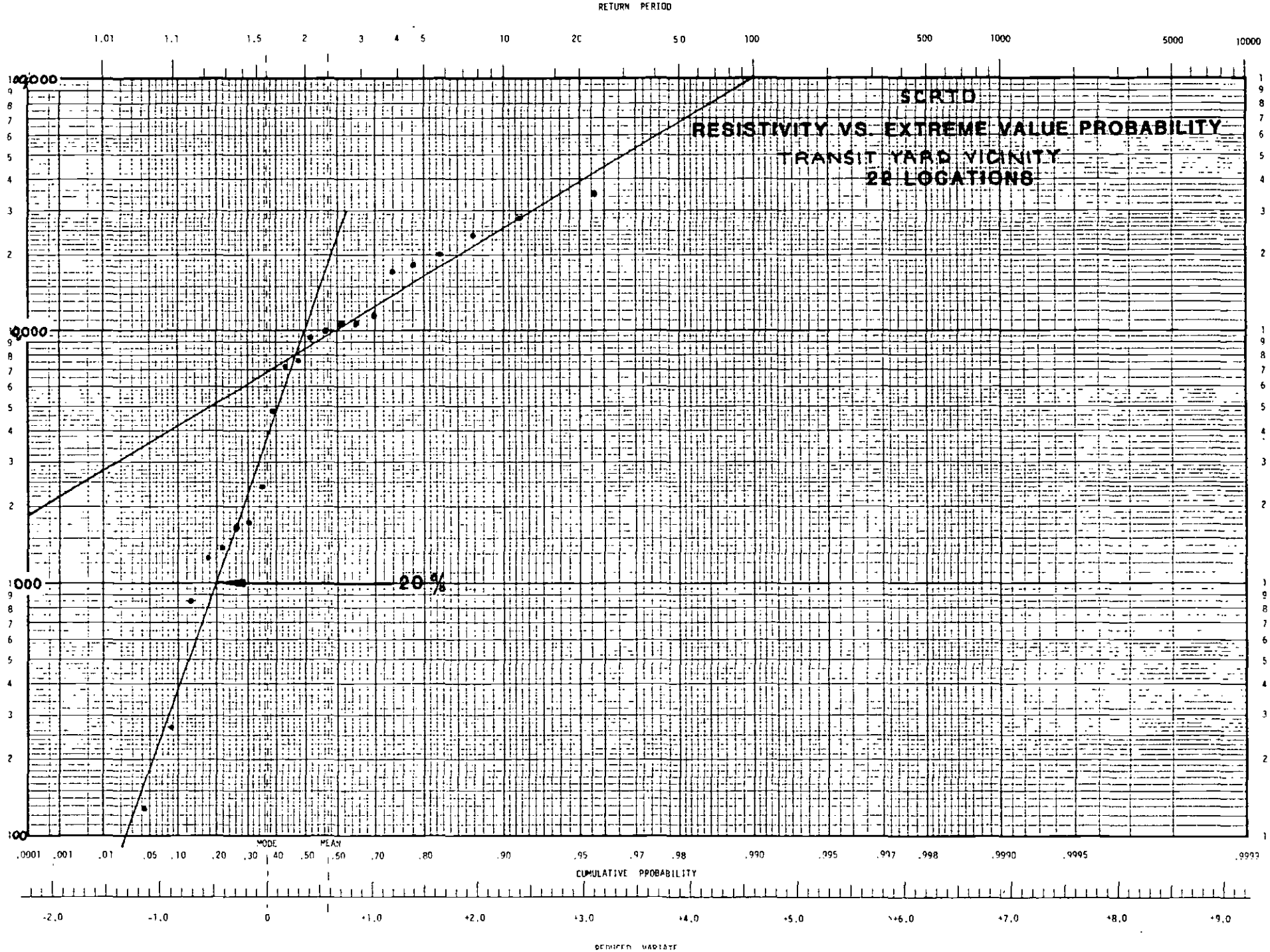

PLATE XIII

PLATE XIV

SCRTD
MEAN SOIL RESISTIVITY VS. DEPTH
REVISED TRANSIT ALIGNMENT AND TRANSIT YARD VICINITY

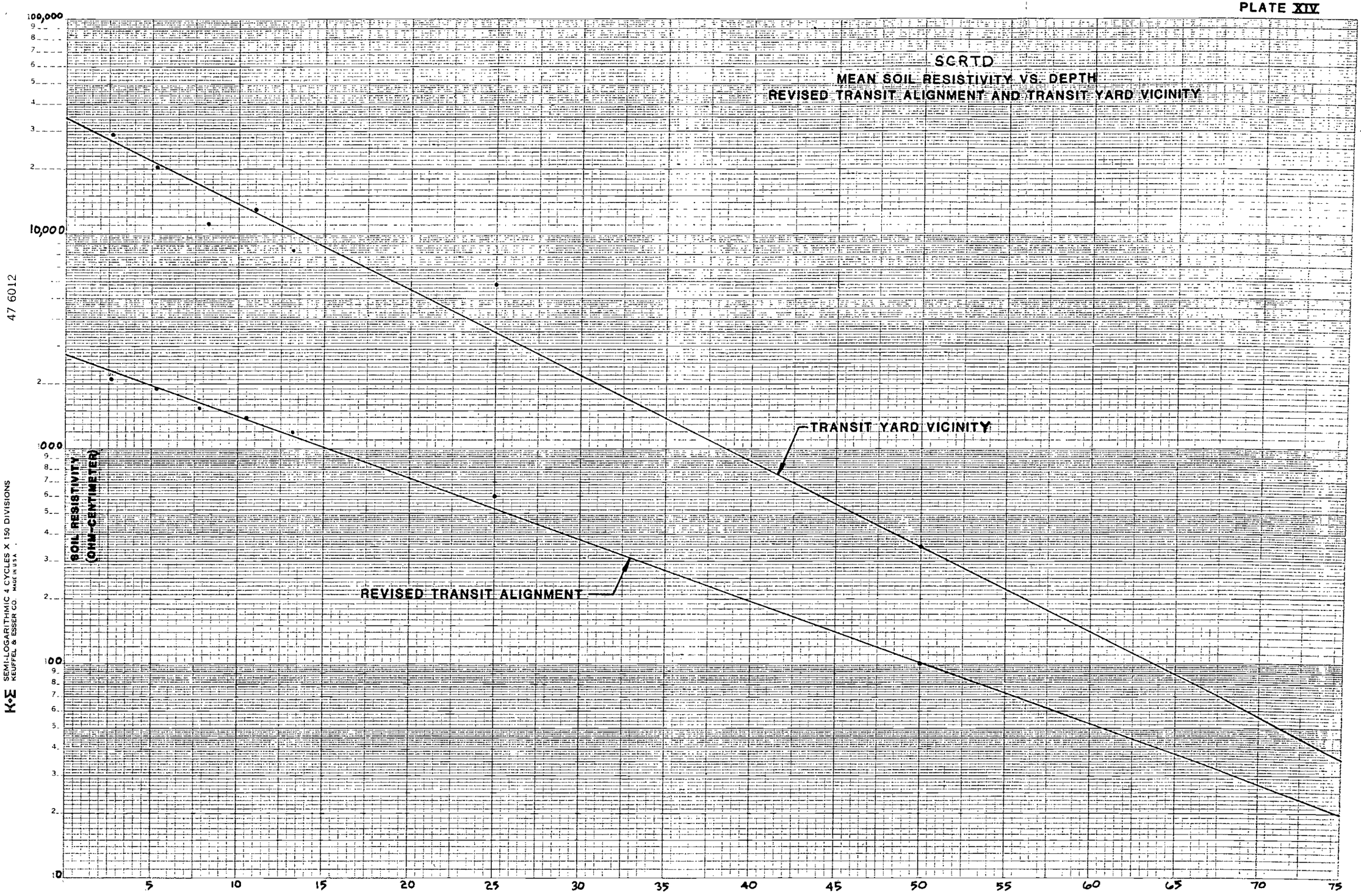

47 6012

K+E SEMI-LOGARITHMIC 4 CYCLES X 150 DIVISIONS
KEUFFEL & ESSER CO. MADE IN U.S.A.

TASK 5

STRAY CURRENT ANALYSIS

Table of Contents

Section	Description	Page
1.0	SUMMARY	5-1
2.0	INTRODUCTION	5-2
3.0.	CONCLUSIONS	5-4
3.1	Stray Current Levels and Earth Gradients	5-4
3.2	Controlling Factors - Traction Power Configuration	5-4
3.3	Controlling Factors - Transit System Fixed Facilities	5-5
3.4	Worst Case Anticipated Stray Current and Track Potential Levels	5-5
4.0	RECOMMENDATIONS AND ALTERNATIVES	5-7
4.1	Traction Power Configuration - Basic Considerations	5-7
4.2	Track-To-Earth Resistance Requirements	5-8
4.3	Transit System Fixed Facilities	5-11
4.4	Utility Structures (Piping and Conduits)	5-11
5.0.	DISCUSSION	5-11
Appendix A	Effect of Stray Currents on Utility Structures	5-A-1
Appendix B	Stray Current and Track-To-Earth Potential Analysis	5-B-1
Appendix C	Effect of Stray Currents on Tunnel Construction	5-C-1

LIST OF FIGURES, TABLES AND PLATES

	Description	Page
Figure 1	Impact of Track-To-Earth Resistances On Corrosion Control Requirements	5-1A
Table A-1	Significance Of Stray Current Effects On Utility Structures	5-A-3
Table B-1	Matrix Equations For The Circuit Model With A Load At 5th And Hill Passenger Station	
Table B-1A	Solutions To The Matrix Equations	
Table B-2	Summary Of Potentials And Stray Currents For A Load at 5th And Hill Passenger Station	
Table B-3	Summary Of Track-To-Earth Potentials And Stray Current Levels	
Table B-4	Summary Of Maximum Stray Current Levels For Various Track-To-Earth Resistances	
Table B-5	Mainline TPSS Locations and Capacities	
Table C-1	Solution Of Mathematical Model For Distribution Of Stray Current In Tunnel	
Table C-2	Relative Coating Quality For Various Tunnel-To-Earth Resistances	5-C-6
Table C-3	Anticipated Current Densities For Current Discharge From The Tunnel	5-C-7
Plate A-1	Gradient Effect Of Transit System On Utility Pipeline	
Plate A-2	Potential Gradient In Earth (E_S) vs. Distance Perpendicular To Transit Way	
Plate A-3	% E_S vs. % Distance Along Structure	
Plate A-4	Stray Earth Current vs. Soil Resistivity For Maximum Allowable Earth Gradient	
Plate A-5	Summary Of Acceptable Stray Current Levels	
Plate B-1	Circuit Analysis Model - Load At 5th And Hill Passenger Station	

Plate B-2	E_G & I_S vs. Distance - Load At 5th And Hill
Plate B-3	E_G & I_S vs. Distance - Load At Wilshire and Normandie
Plate B-4	E_G & I_S vs. Distance - Load 500 Feet South Of Wilshire and La Brea; Yard Electrically Isolated
Plate B-5	E_G & I_S vs. Distance - Load At Wilshire And Crenshaw; Yard Electrically Isolated
Plate B-6	E_G & I_S vs. Distance - Load 500 Feet North Of Beverly And Fairfax
Plate B-7	E_G & I_S vs. Distance - Load At 500 Feet South of Hollywood; Yard Electrically Isolated
Plate B-8	E_G & I_S vs. Distance - Load At 5th And Hill; 7th and Flower TPSS Off Line
Plate B-9	E_G & I_S vs. Distance - Load At Wilshire and Normandie; Yard Isolated; Wilshire and Western TPSS Off Line
Plate B-10	E_G & I_S vs. Distance - Load 500 Feet South Of Wilshire And La Brea; Yard Electrically Isolated, Wilshire And La Brea TPSS Off Line

Plate B-11	E_G & I_S vs. Distance - Load 500 Feet North Of Fairfax and Beverly; Yard Electrically Isolated, Fairfax And Beverly TPSS Off Line
Plate B-12	E_G & I_S vs. Distance - Load At 500 Feet South of North Hollywood; Yard Electrically Isolated, North Hollywood TPSS Off Line
Plate B-13	E_G & I_S vs. Distance - Load At 5th and Hill; Yard Isolated; All TPSS at 5.0 MW
Plate B-14	E_G & I_S vs. Distance - Load At Wilshire and Normandie; Yard Isolated; All TPSS At 5.0 MW
Plate B-15	E_G & I_S vs. Distance - Load At 500 Feet South of Wilshire and La Brea; Yard Isolated; All TPSS At 5.0 MW
Plate B-16	E_G & I_S vs. Distance - Load At Wilshire and Crenshaw; Yard Isolated; All TPSS At 5.0 MW
Plate B-17	E_G & I_S vs. Distance - Load At 500 Feet North of Beverly and Fairfax; Yard Isolated; All TPSS At 5.0 MW
Plate B-18	E_G & I_S vs. Distance Load At 500 Feet South of North Hollywood; Yard Isolated; All TPSS 5.0 MW

Plate B-19	E_G & I_S vs. Distance Load At 500 Feet South of Wilshire and La Brea; Yard Isolated; Track-To-Earth Between Stations 402+49 and 473+42 At .75 ohm/1,000 Feet (4 Rails)
Plate C-1	Stray Current Distribution Model For Tunnel
Plate C-2	Earth Current Flow Off Tunnel vs. Distance
Plate C-3	Current Flow On Tunnel vs. Distance
Plate C-4	Tunnel Resistance-To-Earth vs. $\%I_S$ To Earth At Load
Plate C-5	Tunnel Resistance-To-Earth vs. $\%I_S$ On Tunnel @ End Of Discharge Area

1. SUMMARY

This report documents the results of Task 5 "Analysis of Stray Current and Consideration of Various Alternatives" for corrosion control engineering for the Metro Rail Project. The study was based on system alignment, traction power configuration and other pertinent system parameters as established by the Southern California Rapid Transit District for a proposed conventional rail return DC powered transit system. As such recommendations and alternatives developed are applicable within the constraints established by a system using the running rails as the principal negative return conductor and the parameters specified. Alternatives available that may be considered superior to those presented require a departure from conventional traction power design, to a system that does not utilize the running rails as part of negative power circuit. A review of these alternatives is beyond the scope of this study.

The analysis demonstrates that maximum stray current levels in the general range of 0.10 ampere per thousand feet of system will be acceptable relative to the impact on area utilities and corrosion of transit system fixed facilities. The most important factor within the transit system that will be utilized to establish this level is track- to-earth resistance. The study further shows that at a 1,000 to 1,500 ohm level per thousand feet of single track, stray currents will meet the established criteria under normal operating conditions without the need for additional mitigative measures on transit fixed facilities or area utilities. It must be emphasized that the use of a range of track- to-earth resistances above does not infer that efforts should be directed toward obtaining the lower value (i.e. 1,000 ohms per 1,000 feet). Design criteria and construction efforts must be based on a minimum level of 1,500 ohms per 1,000 feet of track (2 rails). From a practical standpoint, there is little, if any, difference in design and construction between a 1,000 ohm level and a 1,500 ohm level.

The impact of track-to-earth resistance on overall corrosion control requirements is illustrated and summarized on Figure 1. This figure shows that as track-to-earth resistance levels decrease more extensive and, therefore, more costly corrosion mitigative measures are required for both area utilities and transit system fixed facilities. The more significant additional requirements are highlighted in Figure 1, which is not intended to present each and every specific corrosion requirement. The additional measures presented increase in overall cost as track resistances decrease. The implication here is that stray current control monies that are budgeted to provide the best in-service track-to-earth resistance obtainable using present day technology will result in maximum benefit for amount invested. This requires, among other factors, the use of properly designed insulating direct fixation rail fasteners, a tunnel design and track bed drainage system that will keep moisture away from the rails and keep rail fasteners dry and lastly a maintenance program that will prevent the build-up of conductive materials around the rails and the fasteners.

FIGURE 1

IMPACT OF TRACK-TO-EARTH RESISTANCES

ON CORROSION CONTROL REQUIREMENTS

TRANSIT FACILITIES	TRACK-TO-EARTH RESISTANCES per 1,000' of single track (2 rails)	UTILITIES
No significant stray current corrosion of reinforced concrete tunnel structures or of fixed facilities.	-1500-	No significant stray current corrosion of utilities.
Electrical continuity of steel reinforcement and of fixed facilities is not required.	-1000-	Extensive testing and additional corrosion control measures not required.
Installation of electrically continuous collector mat with the necessary stray current drainage facilities to negative bus is required.		Existing cathodic protection systems may require modifications with the possibility of new systems being installed in some isolated cases.
Internal coating of tunnel required.	-500-	Some stray current testing is required to determine the extent of stray currents.
Longitudinal resistance of collector mat must be reduced.		Some area utilities may require drainage of stray current to the negative return bus.
		Extensive testing and evaluation of stray currents is required.
Electrical continuity between precast panels is required supplemented with the collector mat and the internal coating.	-250-	Utility operators may seek recourse through the transit district for extensive stray current evaluation.
		All area utilities will require extensive evaluation of stray currents requiring modification of protection systems, installation of additional systems and stray current drainage bonds.
Stray current levels uncontrollable.	-50-	Stray current levels uncontrollable.

The best interests of the Southern California Rapid Transit District will be served by making judicious use of funds budgeted for stray current control by insuring that the funds are directed to the area where resulting benefits will be maximized, namely the in-service resistance of the negative conductors (principally running rail).

2. INTRODUCTION

A major source of corrosion is the discharge of stray direct current from the surface of buried or submerged metal into a surrounding electrolyte. These stray earth currents are created from direct current equipment such as welding and plating operations, cathodic protection systems and electrified railways. This stray current can affect both metallic and prestressed or reinforced concrete pipe and structural reinforcing steel.

The control of stray earth currents to reasonable levels is the most important corrosion control aspect of a direct current powered transit facility. To construct and operate such a system without adequate control of stray currents would result in severe corrosion damage, possibly leading to failure of many existing underground utility structures and, of course, to some of those structures that are part of the Metro Rail Project. The existing utility structures, such as gas and water mains, and telephone and electrical cables, would be particularly susceptible to stray currents caused by operation of the Metro Rail system because these structures were, generally speaking, not constructed with the control of stray currents as a design factor.

The solution to controlling stray earth current levels at the source is through the use of a reasonable combination of the following factors:

- traction power substation spacings
- conductance within the positive and negative power distribution circuits
- electrical isolation of both the positive and negative circuits from ground

The most important factor of those cited above is the level of electrical isolation of the negative return circuit from ground. Since the running rails are used as the negative return circuit, electrical insulation must be established between the rails and their supporting devices (i.e. ties, slabs, inverts). Practical considerations establish an upper limit to the level of insulation that can be achieved, hence stray currents are not eliminated, but reduced to low levels which would not be detrimental to District facilities or area utilities. If a sufficient level of insulation is not achieved, incorporation of special features into transit facilities, such as electrical continuity of reinforcing steel, to control and reduce the detrimental effects of stray currents would be required.

The role of system maintenance is very important in preserving the level of electrical isolation of the negative return circuit from ground. Experience has shown that stray currents can be reduced to reasonable levels during initial operations of a new transit system. However, long term deterioration of electrical insulating characteristics of rail fasteners caused by moisture and debris build-up has been noted. Certain features can, however, be incorporated into system design to reduce the severity of this problem and adequate maintenance throughout the life of the system can keep the level of stray currents from increasing significantly from the initial levels.

The specific objectives established for this task, given the present intended construction, relative to system alignment, traction power configuration and other system variables are as follows:

- Establish a maximum level of stray earth current leakage from the rails that will not require installation of extensive mitigative measures on area utilities or transit facilities. Selected, individual structures may, however, require special consideration, and certain minimal measures may still be required for transit facilities.

- Determine, through network analysis, track-to-earth potentials and stray earth currents that can be expected from operation of the Metro Rail System under specific traction power configurations as presently defined.

- Develop to the extent possible, the consequences of not meeting stray current corrosion control objectives by varying or modifying certain transit system parameters.

The transit system configuration presently being considered by the Southern California Rapid Transit District includes the major features that will result in minimal stray current levels and thus satisfy the first objective cited above. These features, on which the study has been based, include the following major items:

a) Proper traction power substation spacing and location at points of maximum load, namely passenger stations, with two exceptions.

b) Sufficient conductance within the positive and negative power distribution circuits based on the use of composite contact rail (aluminum/steel) and 115 pound continuously welded running rail.

c) Electrical separation of the storage yard and maintenance facility from the mainline system which will increase overall negative system-to-earth resistance.

d) Use of properly designed rail fixation devices in conjunction with a well drained trackway, minimal water seepage in the

tunnel and planned maintenance of the track fixation devices to remove conductive materials. It is anticipated that the present District commitment to stray current control will result in a track-to-earth resistance in the range of 1,000 to 1,500 ohms per 1,000 feet of track (2 rails).

Consideration must still be given to stray current corrosion of metallic facilities likely to occur within the Metro Rail Project even with the anticipated low levels of stray earth current. Since stray current corrosion will represent one of the most important causes of the failure of metallic structures and corresponding increases in maintenance costs, certain features must be incorporated into the design of the transit system facilities to reduce or eliminate this form of corrosion. These considerations may include the use of protective coatings, electrical continuity, cathodic protection of pressure piping and other facilities, or the use of alternate materials to avoid the expense associated with corrosion damage.

3. CONCLUSIONS

3.1 Stray Current Levels and Earth Gradients (all values stated can vary +20% without affecting the results).

3.1.1 A maximum earth potential gradient at one thousand feet from the transit system of 0.050 volt can be considered as acceptable relative to effects on area utilities.

3.1.2 Stray current levels no greater than 0.10 ampere per thousand feet of system are required to keep earth potential gradients at 0.050 volt maximum at all locations throughout the system and, therefore, can be considered as a maximum acceptable level.

3.1.3 Stray current flow on structural components within the tunnel structure (i.e. reinforcing steel and metallic liner) must be kept to absolute minimum levels. The actual value is inversely proportional to coating quality. That is a high quality external coating on the tunnel will result in a lower acceptable level of stray current than a poorer quality coating.

3.2 Controlling Factors - Traction Power Configuration

3.2.1 The singular most important controlling factor that will minimize stray current corrosion of both utility and tunnel structural components is the level of track-to-earth resistance that can be maintained during in-service operations. Any track resistance level obtained must be uniformly distributed over the length of the system. A level of 1,500 ohms per thousand feet of system (2 rails) will meet the criteria cited in section 2.1. Levels as much as 10 to 15 percent lower than 1,500 ohm value will still result in acceptable stray current magnitudes depending upon the specific location.

MTA LIBRARY

3.2.2 Other factors that will contribute to the overall reduction in stray earth currents and associated corrosion are as follows, (These items are either being considered or have been adopted by the District).

a. Electrical isolation of the storage yard and maintenance facility from the mainline system (both positive and negative circuits) will result in a 30 to 50% reduction in total stray current levels, and in some specific instances, with a load operating near the yard/mainline interface will result in an 80% reduction.

b. Conversion of seven traction power substations from 2.5 to 5.0 megawatt units to allow for 2.0 minute headway operations, such that all traction power substations will be 5.0 MW units, will result in up to a 40% reduction in stray current levels.

3.3 Controlling Factors - Transit System Fixed Facilities

3.3.1 It is not practical to reduce or control stray earth current levels by increasing tunnel-to-earth resistance through application of protective coating or by increasing longitudinal continuity by electrically bonding reinforcing within tunnel liner segments or inverts. Protective coating is required for protection against corrosive soils (see Task 2 report).

3.3.2 Anticipated corrosion rates for steel reinforcement within tunnel liner panels will be directly proportional to the quality of the external protective coating (i.e. higher corrosion rates with higher quality coating) and stray current level.

3.3.3 Stray current flow to earth from the tunnel structure will be essentially the same as stray current flow from the rails since it is not practical to keep any significant portion of rail discharge current on the metallic components of the tunnel.

3.3.4 Stray current flow on reinforcing steel within electrically discontinuous concrete liner panels and inverts can be reduced to levels that will not cause any corrosion damage by establishing a maximum level of stray earth current from the rails of 0.10 ampere per thousand feet of system.

3.4 Worst Case Anticipated Stray Current and Track Potential Levels

All values stated are a function of the load current and, as such, will vary as load current varies. Time duration of stated levels will generally coincide with the time duration of the specified load current. Also, results presented are for a system configuration which includes both 2.5 and 5.0 megawatt traction power substations. See conclusion 2.2.2.b for the impact of changing all traction power substations to 5.0 megawatt units.

3.4.1 During normal operations, track-to-earth potentials ranging from 28.0 to 41.0 volts can be expected to occur at maximum load locations (i.e. passenger stations) for a single six car train drawing maximum current of 7,200 amperes. These voltages will approximately double when there are two six car trains drawing maximum current at a single passenger station. This will occur when two trains leave the same station within approximately 5 seconds of each other, and will occur for the duration of the peak load current, approximately 3 seconds.

3.4.2 During abnormal operating conditions, with one traction power substation adjacent to the load out of service (both rectifier units if present), track-to-earth potentials ranging from 57.0 to 212.0 [1] volts can be expected to occur for a single six car train drawing maximum current of 7,200 amperes. Two train operation from a single passenger station, except at end-of-line stations, during this condition may result in unsafe levels of track-to-earth potentials. The 212 volt potential cited above represents an extreme worst case condition since the loss of both rectifier units at a 5.0 megawatt traction power substation is unlikely. Also, this value is based on a 7,200 ampere load at North Hollywood station. Loss of the entire TPSS at this location would, in all likelihood, result in an excessive voltage drop, such that the voltage at the load would be insufficient for train operation or at best require reduced train performance. This would result in a load current much lower than maximum and, therefore, lower track-to-earth potentials. A more realistic upper limit would be in the order of 100 volts, nevertheless this condition must be reviewed carefully by operations personnel.

3.4.3 During normal operating conditions, stray earth currents per one thousand feet of two-track system (4 rails) will be at the following maximum levels for the track resistance and load currents indicated. The duration of these effects will be up to approximately six (6) seconds for single and two train operations. These time durations are based on load currents ranging from 90 to 100 percent of maximum.

Track Resistance (Ω/1,000'-4 rails) @13,600 A Load [2]	Stray Earth Currents @7,200 A Load (Amperes/1,000')	(Amperes/1,000')
750[1] to 500	.055 to .083	.104 to .156
500 to 250	.083 to .166	.156 to .314
250 to 125	.166 to .332	.314 to .627
125 to 25	.332 to 1.66	.627 to 3.14
2.5 to 0.25	16.6 to 166	31.4 to 314.

(1) At North Hollywood passenger station with the TPSS at this location out of service.

3.4.4 Track-to-earth resistances tabulated in 2.4.3 above ranging from 250 to 750 ohms per thousand feet of two-track system can be achieved through the use of insulating direct fixation rail fasteners, while the lower ranges cited are normally encountered with conventional timber tie and ballast construction (125 to 25 ohms) and embedded rail construction (2.5 to .25 ohms).

3.4.5 A minimum in-service level of 500 to 750 ohms per thousand feet of double track (4 rails), distributed such that there is no more than a 10 percent decrease in these resistance values per thousand feet, will maintain stray currents at a level, during normal operations, that will not require installation of extensive supplemental mitigative measures on area utilities or transit structures.

4. RECOMMENDATIONS AND ALTERNATIVES

4.1 Traction Power Configuration - Basic Considerations

4.1.1 A commitment should be made to proceed with the electrical isolation of the yard and maintenance facility from the mainline system. Specific requirements will include rail insulating joints at the yard mainline interface in conjunction with electrical isolation of the positive circuit (contact rail) through a non-bridgeable gap. Additional design requirements include the following:

a. Installation of a separate traction power substation for the yard storage area with provisions to connect this substation to the mainline under emergency or other abnormal situations.

b. Installation of a separate power supply for the maintenance shop in conjunction with electrical isolation of shop track from yard track. This will allow for the grounding of the shop track for safety considerations without causing large localized stray earth currents within the yard.

A consequence of not proceeding with proposed yard/mainline segregation plans will be a significant increase in stray current levels and a departure from overall stray current control at the source. Electrically isolating the yard track from earth to the same level as the mainline track is an alternative to the current plans, however, special insulating

(1) Level of track-to-earth resistance used for network analysis, see Appendix B. Also optimum level to maintain stray current control.

(2) Maximum load current with two trains leaving the same station within five (5) seconds of each other.

fasteners would be required for the extensive amount of special trackwork in the yard. Our experience has shown this to be impractical.

4.1.2 Revisions to present traction power substation locations must be based on locating the substations at maximum load points, which are passenger stations. This is especially important if there is any future consideration of deleting traction power substations from the present alignment. The proposed arrangement meets this requirement at all but two locations, namely 5th and Hill and Wilshire and Normandie. Traction power substations at these locations will further reduce stray current levels; however, our analysis does not indicate a need for further consideration of this matter.

4.1.3 Final decisions concerning the construction of Crenshaw Avenue passenger station will not have a signficant impact on stray current levels provided that a traction power substation is installed with the passenger station. The preferred location for the TPSS is at the passenger station, however, other locations not directly at the passenger station will be acceptable for stray current corrosion control.

4.1.4 Addition of one or more traction power substations at intermediate locations not presently included in the proposed alignment, will either have a beneficial effect by further reducing stray current levels or will have little to no effect on the results. Our analysis indicates there is no need for further consideration of this matter relative to stray current control.

4.1.5 Proposed conversion of selected traction power substations from 2.5 to 5.0 megawatt units at some future time to allow for a change to 2 minute headways is desirable for stray current control, but not absolutely necessary. It must be noted that such a conversion in the future will more than offset any increase in stray currents caused by rail wear. This item does not, however, eliminate the need to establish and maintain a maximum level of track-to-earth resistance.

4.2 Track-to-Earth Resistance Requirements

The negative return circuit must be constructed as an ungrounded system with no direct connections to earth or other structures that have a low earth resistance. The only exception to this requirement, that will permit the negative system to be grounded, is the presence of a hazardous high potential between negative system and ground such as may occur during a positive system-to-earth fault. The following alternatives are available relative to track-to-earth resistance levels.

4.2.1 Track Resistance At 500 To 750 Ohms Per Thousand Feet Of Two Track System (4 Rails).

Maintaining track at this level during in-service conditions will result in acceptable stray current levels for both utilities and transit facilities. In both cases there will not be any need to establish extensive mitigative measures for underground structures. Area utilities will be able to maintain present conditions on their facilities without any significant expense and transit fixed facilities, such as the tunnel, will not require any special considerations such as electrical continuity in ring construction or in inverts. Only those measures necessary for protection against soil corrosion will be necessary. This level of track-to-earth resistance can be achieved with insulated direct fixation type construction but also requires a firm commitment to maintaining the level through a well drained, virtually dry track bed, and periodic maintenance to remove indirect leakage paths from the rails caused by operations and build-up of conductive materials around the fasteners.

4.2.2 Track Resistance At 250 To 500 Ohms Per Thousand Feet Of Two Track System.

Maintaining this level of track-to-earth resistance will result in stray current levels up to three times higher than acceptable levels. Area utilities will be affected, while not severely, to a sufficient degree that will require modifications to existing protection systems and in some isolated cases installation of new protection systems. Corrosion rates on transit system fixed facilities (i.e. structural steel and reinforcing) will reach a threshold level where some precautions will become necessary. These precautions would include installation of an electrically continuous collector mat beneath rails in conjunction with internal coating of the tunnel (inside surface of rings below inverts) to reduce current flow on and current discharge from the tunnel reinforcing. Provisions would also be required to connect such a collector mat to the negative bus of substations through a blocking diode to establish drainage of accumulated stray currents. Electrical continuity of the tunnel structure itself would not be required at this level.

There are subtle but significant differences between this level and the previous level from a design and construction standpoint. The more important items would include elimination of leakage paths within and around the rail fastener. Maintenance for long term effectiveness is still required if stray current levels are to be held within the .156 to .314 ampere per thousand feet range.

4.2.3 Track Resistance At 125 To 250 Ohms Per Thousand Feet Of Two Track System

Maintaining this level of track-to-earth resistance will result in stray current levels three to six times higher than acceptable levels. Area utilities will be affected to a point

where selected structures may require drainage of stray currents to the negative system. Testing and evaluation of stray current effects will become extensive to the point where utility operators may seek recourse through the transit district. Corrosion rates on transit system fixed facilities will increase proportionally. Additional longitudinal conductance will be required for the collector mat, most likely established through the use of paralleling copper conductors connected at predetermined intervals to the mat. Drainage of the collector mat is more likely and would require evaluation to determine if it was absolutely necessary.

Design and construction for this level of track-to-earth resistance still requires use of insulating direct fixation fasteners but would not include supplemental measures at individual fasteners. A well drained virtually dry track bed along with a periodic maintenance program is still required.

4.2.4 Track Resistance At 25 To 125 Ohms Per Thousand Feet of Two Track System

Maintaining this level of track-to-earth resistance will result in stray earth currents six to thirty times higher than acceptable levels. Virtually all area utilities will require extensive evaluation probably leading to modification of protection systems, installation of additional systems, bonding of all pipe joints and installation of stray current drainage bonds.

Corrosion rates on tunnel structural steel will reach a level where damage is likely. At this level, electrical continuity between precast panels is required through the full length of the tunnel. This continuity must be supplemented with a collector mat and additional paralleling conductors in the invert (see 3.2.3) and internal coating of the tunnel beneath the invert. Provisions to drain accumulated stray currents from the tunnel reinforcing steel and collector mat/copper cable system to the negative bus of substations through a blocking diode must also be included.

This level of track resistance is normally associated with a very well drained conventional timber tie and ballast construction using steel tie plates. Virtually all efforts to maintain this level are associated with extensive in-service maintenance. There is very little control from a design and construction standpoint that can be exercised to improve resistances. Experience shows that even with a good maintenance program, it is very difficult, if not impossible, to maintain this level of resistance, using non-insulating rail fasteners.

4.2.5 Track Resistance Less Than 25 Ohms Per Thousand Feet of Two Track System

This level of track resistance will result in stray earth currents more than thirty times higher than acceptable levels. A negative return system with these electrical characteristics is simply not acceptable if there is to be any effort to establish stray current control.

4.3 Transit System Fixed Facilities (Tunnel Structural Components)

4.3.1 Recommendations for stray current control of tunnel structural components (i.e. reinforcing steel within precast panels and liners) are directly associated with the level of track-to-earth resistance that can be maintained. Specific requirements as presented in sections 3.2.1 through 3.2.4 range from essentially no measures if track resistances are at the 500 to 750 ohm per thousand feet (4 rails) level to extensive measures consisting of electrical continuity, protective coating (internal), collector mats, and stray current drainage if track resistances are less than 125 ohms per thousand feet (4 rails).

4.3.2 There is no need to establish electrical continuity of precast tunnel liner panels provided track-to-earth resistance can be maintained at 500 to 750 ohms per thousand feet of system (4 rails) during in service conditions. External protective coating will still be required at this level of resistance to reduce corrosive attack caused by soils. Test facilities, including reference electrodes and test wires attached to steel tunnel liners and reinforcing within precast liner panels are required at selected locations throughout the system. These facilities will be used to evaluate actual stray current conditions on the tunnel during operations.

4.4 Utility Structures (Piping and Conduits)

4.4.1 There are no stray current corrosion control measures required for piping and conduit exposed within the tunnel structure or embedded in the invert provided track-to-earth resistance can be maintained at 500 to 750 ohms per thousand feet of system (4 rails).

4.4.2 Buried metallic pressure piping along the mainline portion of the system will require electrical continuity, electrical insulation from both piping inside the tunnel structure and interconnecting piping and test facilities. Stray current drainage from these buried structures will not be required provided the recommended minimum level of track-to-earth resistance is maintained.

4.4.3 Buried metallic pressure piping within the yard area will require electrical continuity, electrical isolation from interconnecting piping, protective coating, test stations and provisions for stray current drainage to the yard traction power substation. These requirements are independent of the mainline track-to-earth resistance.

MTA LIBRARY

4.4.4 Buried metallic pressure piping within the perimeter of the shop building and metallic pressure piping within the building must be electrically insulated from all interconnecting piping external to the building or outside of the building perimeter. All such piping must be connected to the building grounding network along with the shop rails (see 3.1.1).

5. DISCUSSION

The operation of DC powered transit facilities with the running rails used as the negative return have, in the past, created stray earth current magnitudes of uncontrollable conditions. There were, of course, several valid engineering reasons for the stray current conditions occurring at the time these systems were constructed. However, today's technology and engineering experience shows that a DC powered transit system can be built which provides efficient, dependable and safe operation and still controls stray currents to negligible levels or at least levels which allow reasonable control measures to be taken by utility operators and others concerned with the control of underground corrosion. To construct a transit system today without stray current control features would leave the operators open to all manner of damage suits arising from corrosion failures of structures, both factual and conjured.

The principal factors affecting stray current control for a running rail return transit system are:

- Maintaining reasonable voltages throughout the negative return system by consideration of load currents, resistance of the negative return system, distance of loads from the substations and the spacing of the substations.

- Considering the engineering and economic factors that preclude the generation of zero voltage drops within the negative system; the negative distribution system must be constructed in such a manner that it will prevent the flow of excessive earth currents. The only practical manner in which this can be done is to establish a negative system-to-earth resistance which, with the reasonable anticipated voltages created within the negative distribution circuits, will restrict the stray currents to reasonable levels.

Our review of the Metro Rail Project, based on information presently available, is presented in detail in the enclosed Appendices of this report. Appendix A studies the effect of stray earth currents on underground utility structures and develops a reasonable criteria for maximum allowable stray earth currents from the rails. The criteria established is to maintain a maximum earth potential gradient of 0.050 volt at one thousand feet from the transit system. This level was established taking into consideration what most utility operators would include in evaluating stray currents namely, corrosive effects, protective effects and the impact on system monitoring. The earth gradient, under worst case

conditions, could result in an equal magnitude of structure-to-earth potential change on a nearby utility. The basic premise is that a 50 millivolt change in potential in conjunction with the time duration for which it will exist is within the capabilities of most utility operators to mitigate without any extensive efforts or unreasonable expense through their existing corrosion control programs. Also, in those instances where there is no corrosion control program the recommended criteria will not cause a significant reduction in service life to the point where a utility operator must now bear the expense of setting up a corrosion control program as a result of transit operations.

The 50 millivolt maximum potential gradient is dependent upon stray earth current magnitudes and soil resistivities. Since it is not practical to design for different acceptable levels of stray current the lowest value, within reason, taking into account soil resistivities and utility location and densities, must be chosen. Such a value for the conditions intrinsic to the Metro Rail Project and the Los Angeles area is .10 ampere per thousand feet of system. As mentioned, one of the principal factors for stray current control is to maintain reasonable voltages throughout the negative system. Appendix B studies these voltage levels and corresponding stray current levels in detail. While the primary purpose of this study was to determine stray current levels based on the present intended construction and system configuration, other aspects of the traction power system were studied to determine if stray current levels could be reduced.

The first item consisted of reviewing the impact of connecting the yard and maintenance shop to the mainline. The results of the analysis show that connection of yard track to mainline track will increase stray current levels up to 100%, with essentially all of the stray current concentrated in the yard area. The reason for this is that track-to-earth resistances in the yard will be lower than along the mainline because of the extensive amount of special trackwork within the yard area. This type of track construction is generally very difficult to electrically insulate from earth, and while possible, costs associated with special insulating rail fasteners are prohibitive. In addition to reducing stray current levels, separation of the yard from the mainline will also eliminate reflection of mainline operations onto yard track. Since yard track will be substantially lower in resistance than the rest of the system, loads operating remote from the yard will cause track potential variations on yard track again concentrating stray currents within a relatively local area. The opposite of this is also true, namely, operation of loads, even at reduced levels, within the yard will cause large stray current magnitudes in the yard, these currents in turn will cause large potential variations on the track along the mainline. Based on this analysis, we have recommended that the SCRTD proceed with plans to electrically separate the yard/shop from the mainline in both the positive and negative power distribution circuits. This will require installation of a separate traction power substation to provide power for yard operations. Of course, provisions could be installed to electrically

connect this substation to the mainline during emergency conditions.

With the yard separated from the mainline, additional improvement in stray current levels can be achieved within the yard area by electrically separating maintenance shop track from yard track. The basis for this is that shop track must be well grounded for safety purposes. This will concentrate stray currents caused by yard loads in the vicinity of nearby underground structures. Separation of the shop from the yard will eliminate this condition. A separate traction power substation would be required for shop operations. This power supply must be completely separate, both in the positive and negative circuits, from the yard traction power supply.

The second item studied relative to overall track-to-earth potential levels was proposed substation distribution. The present intended arrangement is adequate for stray current control since traction power substations are, with two exceptions, located at all passenger stations where current loads will be at a maximum. Analysis shows that there is no need for any further consideration of this matter except to note that maximum track-to-earth potentials will occur at the two passenger stations, 5th and Hill and Wilshire and Normandie, that do not have traction power substations.

The last item studied relative to track potentials and stray current levels was planned conversion of seven of the fifteen mainline traction power substations from 2.5 to 5.0 megawatt units. This is being considered to allow for operations under 2 minute headways. While the analysis has shown up to a 40.0 percent reduction in track potentials and stray current levels as a result of this conversion, it is not prudent to depend solely upon TPSS capacity increases as the primary means of establishing stray current control. Implementation of the proposed conversion will be a definite asset in maintaining stray earth current at low levels but is not absolutely necessary.

The major part of the analysis in Appendix B was directed towards determining track-to-earth potentials and stray current levels for different values of track-to-earth resistance. The analysis shows that stray current levels can be held to acceptable levels with a track-to-earth resistance of 1,500 ohms per thousand feet of single track (2 rails). This level of resistance is feasible for direct fixation construction using insulating rail fasteners. Experience has shown that such a level can be achieved from new construction, however, unless a firm commitment is made during design and construction, it can be difficult to maintain this level. This aspect of stray current control represents the most significant decision facing the SCRTD. The question is whether design and construction efforts should be directed towards establishing the best level of track resistance practical or should efforts and monies be expended to provide mitigative measures for

transit structures and very possibly utility structures, as a result of accepting some lower level of track-to-earth resistance.

The implications of this are very significant, especially with regards to transit system fixed facilities, namely the tunnel structure. Appendix C studies in detail the impact of stray currents on the tunnel structure from two standpoints. First can the tunnel structure itself be used to reduce stray earth currents and second what level of current is acceptable from a corrosion control standpoint. The results of the analysis in Appendix C show that it is not practical to effect stray current control by keeping rail discharge current on the tunnel structure and, therefore, reduce earth current levels. The reason for this is that tunnel-to-earth resistance necessary to reduce stray earth current flow from the tunnel are not practically obtainable. Results show that a virtually perfect coating application with less than .0001% of the surface area with defects is necessary to effect a 31% reduction in earth currents. This level of coating quality is practically impossible to achieve under ideal conditions, and especially impractical when consideration is given to conditions that will exist ouring actual tunnel construction. The study also showed that efforts to improve the overall earth resistance of the tunnel will result in higher corrosion rates than if the tunnel were left uncoated. The reason for this is that earth current discharge cannot be reduced to low enough levels which in conjunction with less bare surface area concentrates remaining earth current discharge at very small areas, thus significantly increasing corrosion rates.

In summary the analysis has shown that the present plans of the SCRTD represent the best of several alternatives available to establish effective stray current control. The alternatives are a function of the track-to-earth resistance that can be maintained during in-service operations. As the level of obtained track resistance decreases, the SCRTD must spend monies to provide both their own facilities and possibly facilities belonging to others with stray current protection. As can be seen, the trade-off established by this analysis is the question of where should stray current control funding be utilized. By devoting the vast majority of stray current control monies to establishing and maintaining a track-to-earth resistance of 1,500 ohms per thousand feet of track (2 rails) the SCRTD will not have to incur costs associated with providing corrosion control measures on their facilities and of facilities belonging to others. Inherent in this "best alternative" is the fact that a firm commitment by SCRTD must be made to insure that track resistance levels are not only established during construction but are maintained during in-service operations. Among the more important factors included in this commitment is to establish a well drained track bed and a maintenance program to remove conductive materials from around the rails and rail fasteners.

As the level of obtained track-to-earth resistance decreases, the stray current corrosion control requirements, and hence costs

will increase. The more significant items that will contribute to cost increases are providing collector mats within, and internal coating beneath, the track inverts to control stray current corrosion of the tunnel reinforcing and costs incurred by utility operators to test, evaluate and mitigate stray current effects. This latter item is subject to some discussion for it is not clear as to who is actually responsible for these costs, the SCRTD or the individual utility operators. In our opinion, it is in the best interests of the SCRTD to design and construct a system with a low level of stray current such that this debate never occurs.

Finally, at track-to-earth resistance levels less than 250 ohms per thousand feet of track (2 rails), the SCRTD will be faced with establishing electrical continuity of steel reinforcing throughout their entire tunnel system in addition to the previously discussed measures. At this level, utility effects will become more prevalent thus increasing the likelihood that utility operators will seek both technical and financial recourse through the SCRTD.

The need for a firm commitment and strict adherence to the final measures decided upon cannot be over-emphasized, both from the standpoint of stray current control and track-to-earth potentials. The changing of one parameter could result in significant changes in other areas and thus must be approached with caution.

APPENDIX A

Effect of Stray Earth Currents on Underground Structures

Operation of a DC rail return transit system will produce stray earth current leakage from the rails. While these currents are relatively small as compared to total system operating currents, they may create significant corrosive effects on nearby utility structures and transit structures particularly since the existing utility structures did not necessarily include stray current corrosion control provisions in their construction. To attempt to provide these utility structures with some form of stray current protection that does not impact transit system design would be a monumental task, possibly requiring individual studies on virtually every nearby structure. Also, follow up work could be required to provide utilities with electrical continuity, protective coating and stray current drainage.

Because of the magntiude of such a project and the question of who should bear the costs associated with the work, it will be in the best interest of the SCRTD to provide as much stray current control built into their system as economically feasible and practical. In order to demonstrate the need for such an approach, the following discussion is intended as an overview of generally accepted guidelines, used by utility operators in evaluating protective and/or corrosive effects on underground facilities. These guidelines are then used as a basis to determine a general range of maximum allowable stray current levels, from operation of the Metro Rail System which will result in stray current effects on adjacent utility structures that are within the previously established acceptable levels.

In order to better understand the impact that stray currents can have on underground structures, the following table lists the corrosion rates for various metals resulting from the electrolytic flow of direct current from the metal to a surrounding electrolyte at a rate of one ampere for one year:

Iron	20.14 lb./ampere-year
Copper	22.92 lb./ampere-year
Lead	74.80 lb./ampere-year
Zinc	23.56 lb./ampere-year
Aluminum	6.48 lb./ampere-year

When consideration is given to the fact that one square inch of 0.25-inch wall steel pipe weighs about 0.071 lbs., complete destruction of the exposed wall would occur at the following rates, if the currents indicated were dissipated into the earth over the one square inch area:

Current (Amperes)	Time (Years)
1.0	0.0035 (≈ 31 hours)
0.1	0.035 (≈ 12+ days)
0.01	0.35
0.001	3.5
0.0001	35.0

Under the normal corrosion mechanism of a pressured pipeline, a failure of the wall would actually occur at less than 50 percent of the time calculated for complete destruction of the one-square inch wall. In addition, the dissipation of current from other structures such as transit rails, steel piling and structural members, metallic cable sheaths, etc. could result in corrosion rates on these structures of the same order of magnitudes as those expressed above.

Significance of Stray Current Effects on Utility and Transit Structures

There are three categories of stray current effects that must be evaluated relative to their impact on underground structures. These are, protective effects, corrosive effects and the impact on cathodic protection evaluation (system monitoring). The information shown in Table A-1 presents criteria, based on our experience as to what must be considered acceptable or unacceptable structure-to-earth potential variations from stray earth currents until proven otherwise, probably by extensive testing. This table shows various values of change in structure-to-earth potential (ΔE_B) from stray currents (Quantitative Effect) and a comment on the significance of this effect for each of the three aforementioned effect categories (Qualitative Effect).

Table A-1

Significance of Stray Current Effects on Utility Structures

Quantitative Effect	Qualitative Effect		
ΔE_p (Volts)			
	Protective	Corrosive	System Monitoring
0	Acceptable	Acceptable	Acceptable
.010	Acceptable	Acceptable	Acceptable
.040	Acceptable	Questionable	Acceptable
.050	Acceptable	Questionable	Acceptable
.100	Acceptable	Not Acceptable	Questionable
.200	Acceptable	Not Acceptable	Not Acceptable
.300	Questionable	Not Acceptable	Not Acceptable
.400	Questionable	Not Acceptable	Not Acceptable
.500	Not Acceptable	Not Acceptable	Not Acceptable
1.000	Not Acceptable	Not Acceptable	Not Acceptable
2.000	Not Acceptable	Not Acceptable	Not Acceptable

The above table indicates the following relative to protective effects:

a. Protective changes in structure-to-earth potentials up to 0.30 volt will not have a significant effect on the structure.

b. Changes from 0.30 to 0.50 volt may cause disbondment of protective coating (possibly significant).

c. Changes greater than 0.50 volt are definitely not acceptable and will cause disbondment of the protective coating.

The corrosive effect produced on an underground structure evaluated for this study must be done in a critical manner. A pipe or buried cable which is cathodically protected at the general level of 0.85 to 0.90 volt to a copper-copper sulfate ($CuCuSO_4$) reference electrode can fail to meet recognized protection criteria by the presence of interference potentials of 0.025 to 0.050 volt. Loss of indicated protection from changes of less than 0.025 volt would indicate that the original protection level was suspect.

The effect on system monitoring procedures created by the presence of stray currents from a constantly varying source, such as a transit system, creates very definite problems associated with the monitoring of structure potentials to ensure adequate protection. In effect, the potential readings taken to evaluate the adequacy of the cathodic protection, must in some manner be correlated with operating conditions on the transit system. This type survey requires additional time and expertise by the corrosion engineers or technicians performing the survey. We have stated an acceptable level of $\pm$0.10 volt for this

effect; this is somewhat generous, especially on the corrosive effect end.

Acceptable Stray Current Levels

Review of the information shown in Table A-1 indicates that the largest structure-to-earth potential change that can be classified as questionable relative to its impact on one of three corrosion categories is .050 volt. Hence, stray current flow that results in no more than a .050 volt change in structure-to-earth potential can be considered as acceptable. In order to determine a magnitude for this acceptable level, it is necessary to review how the stray current effects are generated, thereby, identifying the controlling factors and second to quantify the results in terms of these factors.

Plate A-1 shows a schematic representation of a pipeline, or other conductor, crossing the tunnel structure. Stray current effects that may occur on this underground structure are generated by the interaction of several factors as follows:

a. Rails discharge (or accumulate) current to (or from) the metallic portions of the tunnel structure (principally reinforcing within the liner panels). Maximum current discharge will be at a load, while maximum current accumulation will be at a substation (see Appendix B).

b. The tunnel structure, with stray current flow acts as current divider, which is established by the ratio of longitudinal tunnel resistance to tunnel-to-earth resistance. A portion of the current flow within the tunnel structural components will be discharged to earth (see Appendix C).

c. Current discharge from the tunnel structure will establish a potential field or series of equipotential lines within the earth in the vicinity of the tunnel. The magnitude of the gradient is proportional to the current discharge.

d. A crossing or paralleling underground structure that traverses these gradients will experience a potential difference across its earth resistances. It is this potential difference that may cause stray current corrosion.

As shown on Plate A-1, the pipeline can be modeled as a distributed resistive network. The per unit resistance to earth values of R_p, at the load and remote from the load and their ratio will determine how the potential, caused by the rails, is distributed along the conductor. This assumes R_l, the longitudinal conductor resistance, to be negligible compared to R_p which is frequently the case for a coated structure. However, R_l will have a significant effect when the structure is uncoated, since R_p will not be much larger than R_L.

The potential difference between any two points in earth that will be traversed by the pipeline or other conductor can be approximated using the following:

Equation 1

$$E_{r_1 - r_2} = \frac{\rho I}{\pi L} \ln r_2/r_1 \quad \text{where}$$

ρ = soil resistivity in ohm-centimeters

I = current from source (tunnel structure or rails) in amperes

L = length of current source in centimeters

r_1 = distance from source surface to conductor

r_2 = distance from source surface to conductor

The relationship between total potential gradient and distance away from the source (r_2) is shown graphically on Plate A-2 for a range of current values and soil resistivities. In both cases, current and soil changes act as simple linear scalers on the resulting potential gradient as shown by the family of curves and multiple scales for the abscissa. It must be noted that this equation and resulting graphical representation have some limitations. The equation as presented, has no upper bound, while actual field studies on operating transit systems indicate that the maximum earth gradient produced by stray current leakage cannot exceed track-to-earth potential at a given location. Of course, to establish such a potential would require a very large current leakage from the transit system. Also, as shown on Plate A-2, it is assumed that variations in soil resistivity external to the structure will not have any impact on current leakage (i.e. soil resistivity does not determine track resistances). This results in a situation where larger potentials will be created in higher (less corrosive) soil resistivity environments.

The distribution of this earth potential gradient on an underground structure is shown graphically on Plate A-3. This graph shows the percentage of the potential defined by Equation 1 that will occur between an underground structure and earth versus distance along the structure. The different curves shown represent anticipated potential distribution for various ratios of structure-to-earth resistance at the transit way and remote from the transit way. Positive values will cause protective effects while negative values will cause corrosive effects. As indicated, the worst case would be a situation where a structure had a low earth resistance near the source and a high earth resistance remote from the source ($R_{P1} << R_{P2}$). In this instance, essentially 100% of the potential caused by the current flow through the earth will occur between the structure and earth remote from the source and be corrosive in nature.

The reverse of this situation may occur, when the structure has a low resistance to earth remote from the source and a high resistance near the source ($R_{P1} >> R_{P2}$). Under these circumstances, a high percentage of the potential caused by the current flow returning to the rails, through earth, will be developed between the structure and earth

in the vicinity of the rails and be corrosive in nature. This is the predominant effect that will exist in the area of traction power substations.

As indicated by the above discussion, the actual effect that will occur on an underground structure will be a function of the electrical characteristics of the specific structure. These characteristics can have a wide range of values for the different types of structures in the area of the transit system and will also vary a considerable degree for structures belonging to a single utility. Calculations of actual stray current effects for each and every structure thus becomes a monumental and complex task. The important point is that the SCRTD has no control over these parameters and must, therefore adopt a policy of controlling or minimizing the earth gradients caused by operation of the transit system. In this fashion, by minimizing earth potentials, the SCRTD will establish realistic stray current control, for both utility type structures and their own facilities.

As shown on Plate A-3, under worst case conditions a typical structure can experience a corrosive effect remote from the transit way equal in magnitude to the earth potential gradient caused by stray current flow. Therefore, it becomes necessary to limit this potential gradient to a value that can be considered as acceptable relative to underground utilities. The value has been established, as discussed previously, as .050 volt. The level of stray current leakage or accumulation that will result in this maximum acceptable potential gradient is shown graphically on Plate A-4 versus soil resistivities. As indicated, stray current leakage from (or to) the rails or structure ranging from approximately 0.10 to 1.5 amperes per 1,000 feet of system will result in an earth potential of .050 volt, for soil resistivities ranging from 15,000 to 1,000 ohm-centimeters, respectively. Average or mean conditions are approximately 2,200 ohm-centimeters which results in a maximum average acceptable stray current level of 0.70 ampere per thousand feet of system. An acceptable level of stray current must be specified together with soil resistivity and tunnel depth at a particular location, and of course utility density. This information is summarized on Plate A-5, which shows stray current levels at discrete locations along the transit system that will result in an earth gradient of .050 volt at a thousand feet. The stray current levels indicated were determined for the specific resistivity and tunnel depth at each location. As indicated, there is a wide range of acceptable stray current levels, however, it is not possible to design for such a range. A particular level must be chosen that is realistic and suitable for the vast majority of the system. In this instance, the maximum level chosen must be 0.10 ampere per thousand feet of system, which if maintained, will establish effective stray current control for essentially all areas of the Metro Rail Project.

As discussed previously, the running rails will act as the primary source for stray currents with the tunnel structure, depending upon electrical continuity, acting as a secondary source. Appendix B reviews in detail the levels of stray current that can be anticipated from system operation and the impact on these levels caused by track-to-earth resistances and other components of the traction power system. Finally, the effect of the tunnel structure on stray current levels is analyzed

in Appendix C. In both cases the analyses are directed towards establishing certain features in the system that will result in stray current levels within the acceptable range established in this section.

Gradient Effect of Transit System on Utility Structures

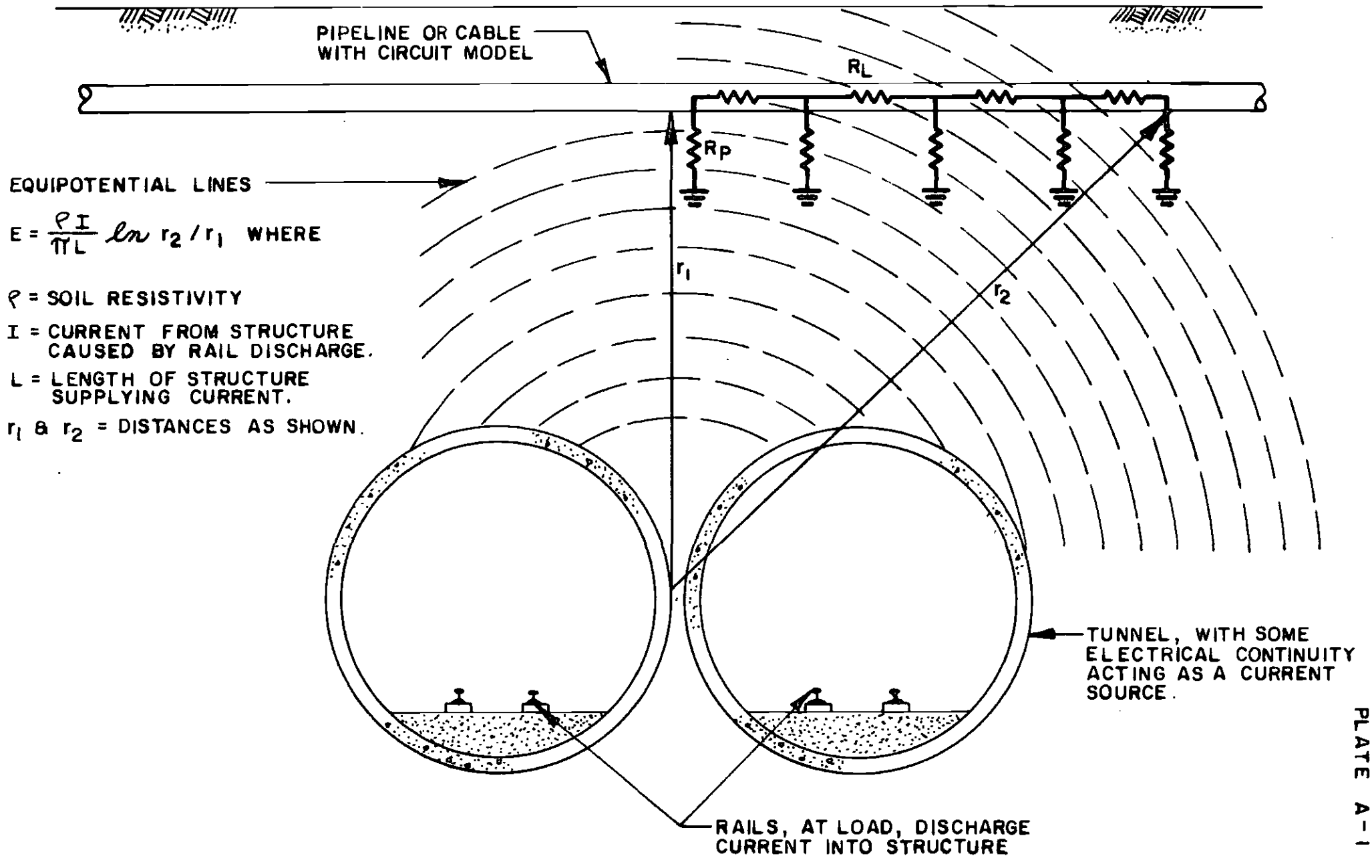

PLATE A-1

Potential Gradient In Earth vs. Distance

Perpendicular To Transit Way

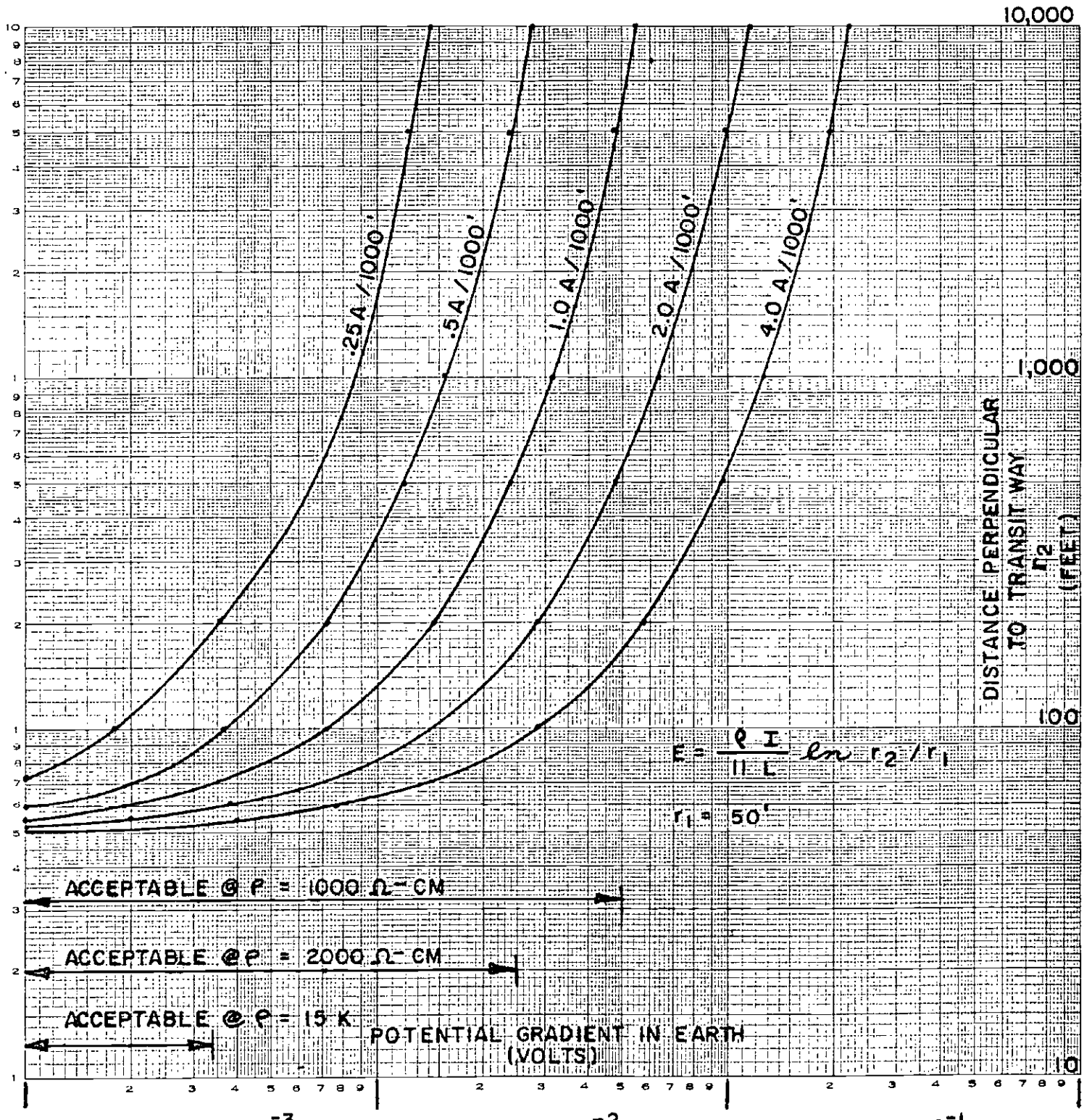

ρ = 1000	X 10^{-3}	X 10^{-2}	X 10^{-1}
ρ = 2000	2 X 10^{-3}	2 X 10^{-2}	2 X 10^{-1}
ρ = 10,000	10 X 10^{-3}	10 X 10^{-2}	10 X 10^{-1}

% Es VS. % DISTANCE ALONG STRUCTURE

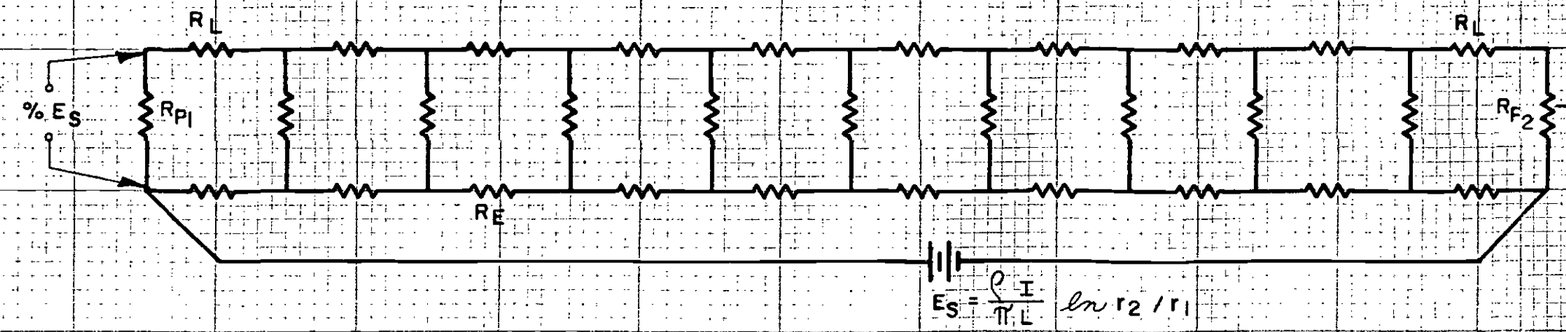

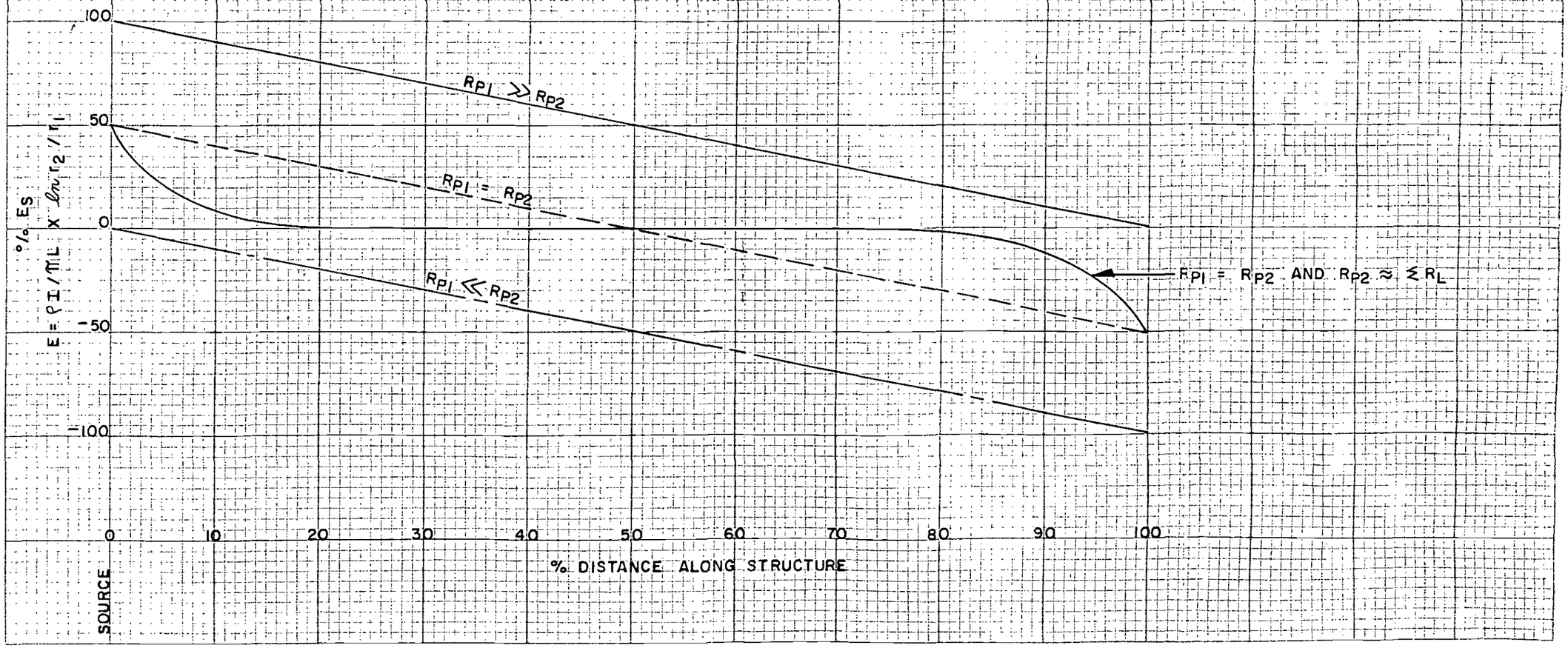

TELEDYNE POST

STRAY EARTH CURRENT VS. SOIL RESISTIVITY FOR MAXIMUM ALLOWABLE EARTH GRADIENT

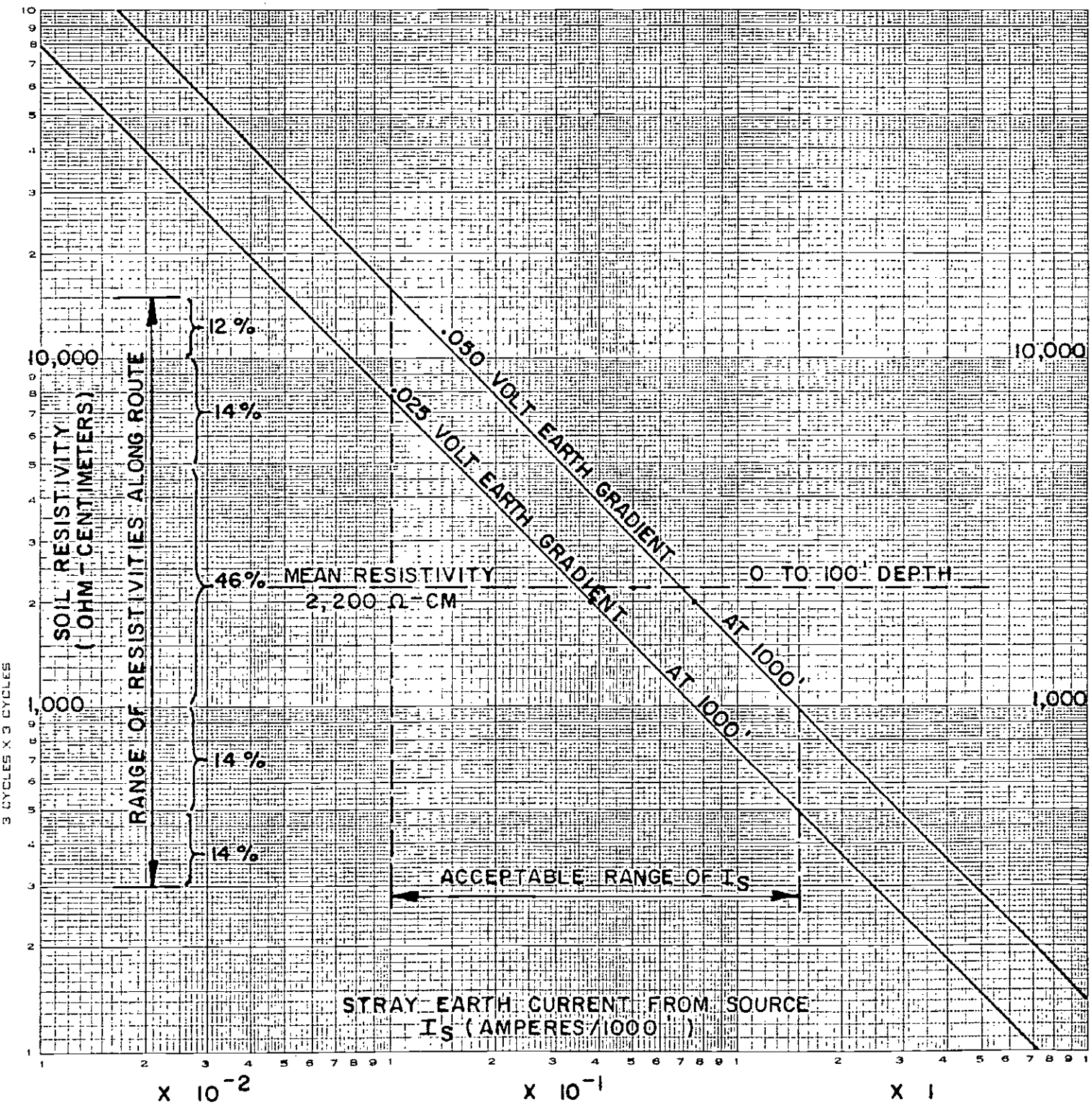

EUGENE DIETZGEN CO.
MADE IN U. S. A.
NO. 340R-L33 DIETZGEN GRAPH PAPER
LOGARITHMIC
3 CYCLES X 3 CYCLES

NO. 3400-L310 DIETZGEN GRAPH PAPER
SEMI-LOGARITHMIC
3 CYCLES X 10 DIVISIONS PER INCH

EUGENE DIETZGEN CO.
MADE IN U. S. A.

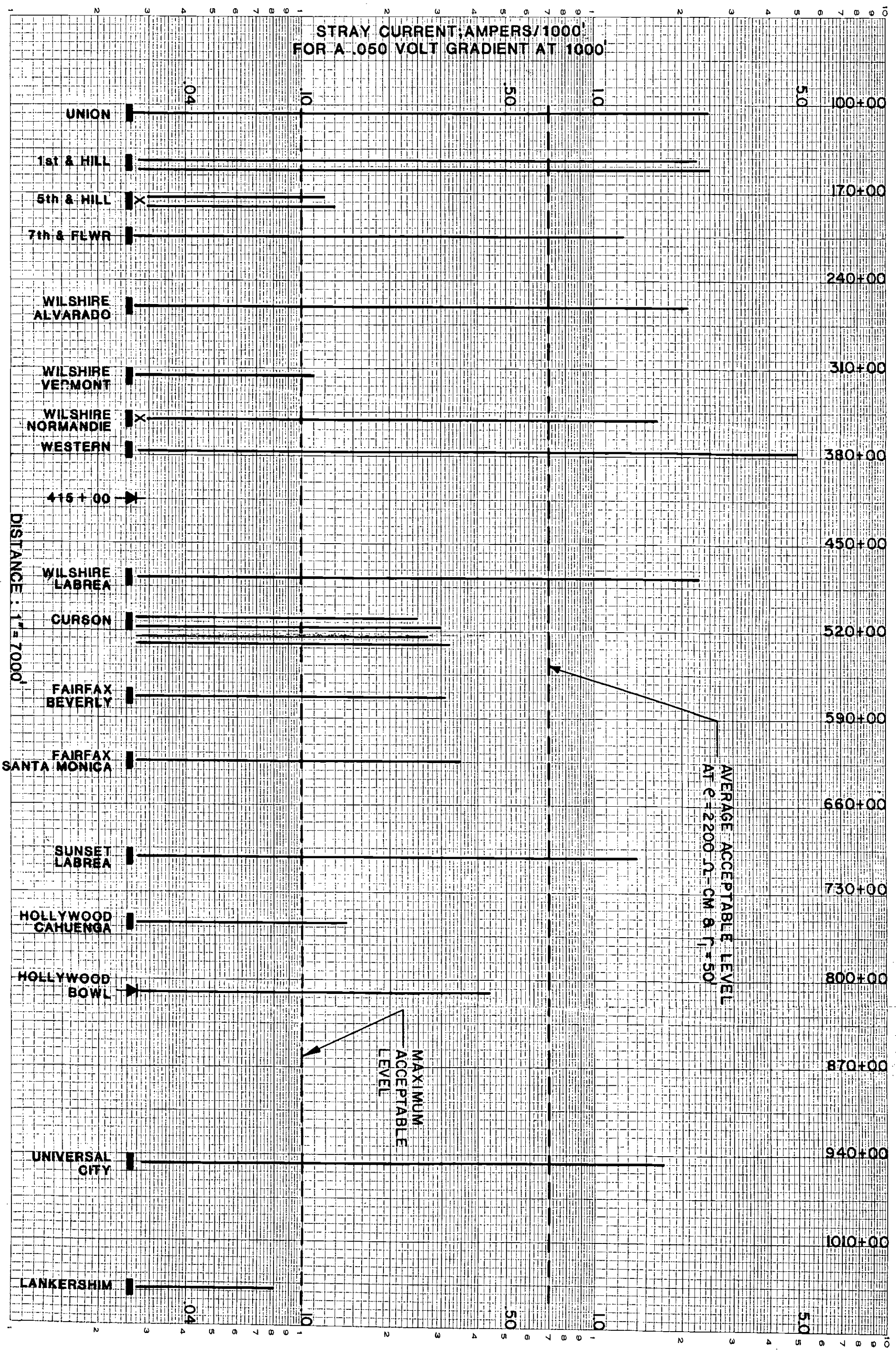

PLATE A-5

APPENDIX B

Stray Current and Track-to-Earth Potential Analysis

Analysis of track-to-earth potentials and stray current magnitudes associated with the operation of a DC powered, rail return transit facility would be a monumental task if an attempt were made to include all possible combinations of load demand, load locations and different combinations of traction power substations (TPSS) in operation. Our experience on this matter on similar type systems, both during design and actual operation, has shown under what operating conditions maximum effects can be expected. The maximum effects are, of course, those that will be of most concern regarding track-to-earth potentials and stray currents. Generally speaking, it is not important that an "average" track-to-earth potential is 5 volts if at five minute intervals a voltage of 150 volts occurs for a duration of 10 seconds and the remaining time the potential is essentially zero. A similar situation exists with the effects of stray earth currents on underground utility structures. The maximum effects are those of major concern because these are the ones which will determine whether the effects are detected and they are the effects which will negate the protective effects from existing cathodic protection systems. This is not to imply that the time duration of the effects are of no concern since the resultant corrosion is a function of the current and time.

The major factors which are used to determine under what conditions maximum stray current effects will occur are:

1. Distance between the load and the source, which relates directly to the resistance (or conductance) factors of the positive and negative power conductors.

2. Magnitude of load current.

3. Resistance-to-earth of the negative power conductors (principally running rails).

There are abnormal conditions which must be considered, such as operating the system with discontinuities within the positive and/or negative distribution conductors and one (or more) TPSS being out of service. In addition, special conditions such as reducing the track-to-earth resistance of a section of track were also considered while modeling the operation of the DC powered, rail return, transit facility. Some abnormal and special conditions require changes in system operations, such as operating at reduced speeds and acceleration levels and restricting the simultaneous starting of trains in close proximity to each other. These changes are matters for consideration in system operations and are, therefore, beyond the scope of this study. These factors are mentioned only as a means of alerting system design

personnel to some very pertinent considerations regarding track potentials and stray current levels.

Since the distance between the load and source and the magnitude of load current cannot be altered to achieve ideal conditions without redesigning the entire transit system, the major factor used in the network analysis of stray currents is the resistance-to-earth of the negative power conductor, i.e. the running rails. The effect of the resistance-to-earth can be summarized in the following manner. As the track-to-earth resistances decrease by order of magnitude, stray current levels increase by order of magnitude. Reciprocally, as the track-to-earth resistances increase by order of magnitude, stray current levels decrease by order of magnitude.

The selection of 750 ohms per 1,000 feet (4 rails) for the track-to-earth resistance was based on the results of our preliminary analysis and commitment by the District to establish as high a practical level of track-to-earth resistance as possible. As a point of comparison, a reasonable starting level of resistance for direct fixation insulated construction is 250 ohms/1,000 feet (4 rails). Resistance to 900 ohms per 1,000 feet have been achieved on other systems during in-service conditions. The results of the network analysis under different conditions and operating configurations establish specific levels of stray current for the Metro Rail project and hence, the level of track resistance necessary to provide adequate stray current control.

Methodology

The modeling of a DC powered, rail return transit facility, such as that proposed for the Metro Rail Project, requires the following considerations:

a. In a DC powered, rail return transit system, longitudinal track resistances and track-to-earth resistances form a continuous distributed network, however, because of the large ratio between the two resistances, they can be considered as lumped values so that the network analysis can be simplified.

b. The most severe stray current effects within an area between substations will be caused by the operation of loads drawing maximum current within that area. Additional loading outside of the area between substations, will not result in additional stray current effects within this area. However, if additional loading were to occur within the area between substations, additional stray current effects would occur within this area.

The circuit diagram shown on Plate B-1 is a model of the Metro Rail Project transit system based on the most recent system configuration data available. To demonstrate the analysis, a load in the form of a six (6) car train has been placed at the 5th and Hill, passenger station. The following electrical constants have been used for this and all other cases throughout this study.

1. The traction power substation (TPSS) rectifiers are rated at either 2.5 or 5.0 megawatts depending upon location as indicated on Table B-5, under 3.5 min. headway, and, as will be discussed, all TPSS units are to be rated at 5.0 megawatts, for 2 minute headways; 795 volts DC no-load with 6% regulation.

2. The longitudinal resistance of the single composite contact rail is .002 ohm per 1,000 feet. Since there are two contact rails for the dual track system the longitudinal resistance becomes .001 ohm per 1,000 feet.

3. The longitudinal resistance of 115 pound running rail is .009043 ohm per 1,000 feet. For the dual track system (four running rails continuously interconnected) the longitudinal resistance is .002261 ohm per 1,000 feet. This value was increased by 10% to account for rail wear only, yielding .002487 ohm/1,000 feet of four rails.

4. All track was assumed to be direct fixation type construction with a resistance of 1,500 ohms per 1,000 feet of single track. Two tracks, therefore, have an earth resistance of 750 ohms per 1,000 feet.

5. The resistance of the positive feeder cables from the traction power substation positive bus to the contact rail was made equal to approximately 200 feet of contact rail yielding .0004 ohm for each of the four feeder circuits from a substation.

6. The resistance of the negative feeder cables from the running rails to the traction power substation negative bus was made equal to one-half the resistance of an individual positive feeder circuit or .0002 ohm.

7. The regulation resistance of the traction power substation transformer rectifier unit is .01426 ohm for 2.5 MW units and .00713 ohm for 5.0 MW units. These values were obtained in the following manner:

$$R_{REG} = \frac{(.06)(.94)(795V)^2}{2.5 \times 10^6 \text{ Watts}} = .01426 \text{ ohm}$$

8. The values for the track-to-earth resistance at each earth contact in the network model were calculated by summing the longitudinal distance between earth contacts on each side of the subject earth contact (in increments of 1,000 feet) and dividing by two. The running rail-to-earth resistance of 750 ohms per 1,000 feet (4 rails) was then divided by the above value to obtain the track-to-earth resistance at one earth contact.

$$R_{T\text{-to-}E} = 750 \text{ ohms}/(l_1 + l_2)/2$$

where:

l_1 = longitudinal distance to the earth contact to the left of subject earth contact, in increments of 1,000 feet.

l_2 = longitudinal distance to earth contact to the right of the subject earth contacts, in increments of 1,000 feet.

9. The values for track-to-earth resistances at the earth contacts at the ends of the network, where track exists, according to the model, only on one side of the earth contact, were calculated by dividing the longitudinal distance between the subject earth contact and the first earth contact in increments of 1,000 feet by two. The track-to-earth resistance of 750 ohms per 1,000 feet (4 rails) was then divided by the above number to obtain the track-to-earth resistance at each end of the transit system model circuit.

$$R_{T\text{-to-}E_{\text{End Points}}} = (750 \text{ ohms})/(l_1/2)$$

where:

l_1 = longitudinal distance to the first earth contact beyond the subject earth contact in increments of 1,000 feet.

Using Kirchoff's Voltage Law and matrix network analysis,

$$Z_m \, I_m = E_m$$

where:

Z_m = loop-impedance matrix

I_m = loop-current matrix

E_m = loop-voltage matrix

For the network shown on Plate B-1, Z_m is a 35 x 35 matrix.

Z_{1-1} is the sum of all the impedances in loop 1. $Z_{1-2} = Z_{2-1}$ is the sum of all the impedances common to loops 1 and 2, the algebraic sign of these impedances are determined by the direction of the loop currents. If the loop currents are flowing in the same direction, the impedances are positive. If the loop currents are flowing in opposite directions, the impedances are negative. (The assigning of algebraic signs to the impedances is necessary to represent the direction of

current through the impedance but does not represent a positive or negative value for the impedance.)

The loop-voltage matrix (E_m), for the example network is a 35 x 1 matrix. E_1 is the sum of all voltage sources in loop 1. The voltage source is positive because the loop current flows through the voltage source from the negative to the positive terminals. Consequently, since there are fifteen voltage sources, i.e. substations, the first fifteen rows of the loop-voltage matrix have values of 795, with rows 16 thru 35 having values of 0.

This technique results in 35 independent equations with 35 unknowns, i.e. loop currents. These loop currents are obtained by solving the system of equations as detailed in Table B-1, using matrix analysis techniques. The results for the circuit under discussion are shown in Table B-1A.

The analysis of stray earth current effects requires a current flow per unit length of running rail, i.e. 1,000 feet. This value is obtained by using calculated track-to-earth potential (determined from branch currents), the resistance-to-earth of the running rails, and the length of running rail under analysis.

$$\text{Stray currents per 1,000 feet} = \frac{\text{Track-to-earth Potential}}{\text{Resistance-to-earth of unit length of running rail under analysis.}}$$

Table B-2 shows results of applying the loop current solutions to determine stray current levels using actual system data. All cases were analyzed using a load current of 7,200 amperes. This value was chosen based on power demand curves supplied by Kaiser Engineers CA. and was determined using a 1.0 megawatt demand per vehicle at 795 volts which yields approximately 1,200 amperes/vehicle for maximum performance. Therefore, a six-vehicle train will draw approximately 7,200 amperes. It must be emphasized that the results to be discussed are load current specific and will vary with both current magnitude and time duration. Also, double loads at a specific point on the transit system will require somewhat less than twice the current. Again, using the above referenced power demand curves, load currents will vary as follows for two trains (six cars each) leaving the same station.

Departure Interval (seconds)	Peak Load Current (amperes)	Duration of Peak Current (seconds)
5	13,000 to 13,600	5 to 2
10	11,300 to 12,100	5 to 2
15	9,800 to 10,600	5 to 2

Therefore, all results, while based on single train operations can be scaled up to two train operation by a factor of 1.89 (13,600/7,200).

In the example with a load at 5th and Hill the rail-to-earth resistance is 750 ohms per 1,000 feet (4 rails). Therefore, stray earth currents per 1,000 feet of system, at the load location, with the load drawing 7,200 amperes would be equal to the following:

41.0 volts/750 ohms/1,000 feet = .055 ampere/1,000 feet

The significance of the levels of stray current on metallic structures in the vicinity of the transit system is discussed in Appendix A of this report.

The results of the network analysis to this point also give some insight into substation distribution. With the load current applied at 5th and Hill, the summation of I_1 thru I_{15}, is 1,045.6 amperes of which 18.05% is supplied by Civic Center TPSS and 29.3% is supplied by Union Station TPSS to the south of the load. North of the load, 41.7% is supplied by the 7th and Flower TPSS, 7.0% is supplied by the Alvarado TPSS, 3.06% is supplied by the Vermont TPSS, .8% is supplied by the Western TPSS with less than .1% from each TPSS north of Western. These values establish that the load current distribution is reasonable from a stray current standpoint and that traction power substations located three or more substations off the load supply a relatively small percentage of load current.

Graphical Presentation of Results (Summarized on Table B-3)

In plotting the voltages and currents obtained from Table B-2 for a load of 7,200 amperes at 5th and Hill Station, current flow from track to earth is considered positive, while current flow from earth to track is considered negative.

Using the same format to determine voltage and current values as that on the example network analysis for a load at 5th and Hill, track-to-earth potentials and stray current flow have been obtained for various load locations under normal, abnormal and special conditions. These results are shown graphically on Plates B-2 through B-19.

Plate B-2 shows track-to-earth potentials (E_G) and stray earth currents (I_S) with a single load at 5th and Hill Station under normal operating conditions, i.e. all TPSS on line and a 750 ohm per 1,000 feet (4 rail) track-to-earth resistance. Two conditions have been plotted. The dotted line represents voltage and current values with the yard track (62,408 feet at 20 ohms/1,000 feet of track) electrically isolated from the mainline. The solid line represents voltage and current values obtained with the yard track electrically connected to the mainline. The graphs show that electrically connecting the yard track into the mainline system at 750 ohms per 1,000 feet (4 rails) creates an increase in stray currents in the yard area with a current exchange between yard track and earth ranging up to 0.4 amperes. This current exchange would increase as the track-to-earth resistance decreases. Because of the exchange of current, underground facilities, present in large numbers in the yard area, will be affected by local stray current.

Plate B-3 is a plot of the track-to-earth potential (E_G) and stray earth current (I_S), under the same conditions as Plate B-1, except that the load of 7,200 amperes has been moved to Wilshire and Normandie. Again, the dotted line represents voltages and currents obtained with the yard electrically isolated from mainline track. The solid line represents voltages and currents obtained with yard electrically connected to mainline track. Here again, the plate graphically shows that electrically connecting the yard to mainline track creates an increase in the magnitudes of stray currents in the yard area with current exchanges ranging up to 0.4 amperes. Although the level of current exchange is small, the below grade structures will still experience effects from the operation of the transit system. It must be noted that as the load operates closer to yard/mainline interface potentials and yard stray current will increase, when the yard is connected to the mainline. Analysis presented in our preliminary report indicated potentials up to 5.0 volts with a load operating at the yard/mainline interface. This will result in approximately 15.0 amperes of stray earth current within the yard. The exchange of .4 to 15. amperes between track and earth depending upon load location is unacceptable relative to an allowable stray current level of 0.10 ampere per 1,000 feet (4 rails) as established previously.

Plates B-4 through B-7 are E_G and I_S plots with single loads at various locations along the route of the transit system. These loads were applied under normal operating conditions, i.e. all TPSS on line and a track-to-earth resistance of 750 ohms per 1,000 feet (4 rails). These cases were analyzed with the yard electrically separated from the mainline because the effects of the yard will decrease as the load moves further away from the yard/mainline interface. The worst case of Plates B-4 to B-7, under normal operating conditions, exists with the load at 500 feet south of North Hollywood Station. With a six-car train drawing 7,200 amperes, a peak voltage of 35.8 volts and a maximum current flow of 0.05 ampere per 1,000 feet is expected. The best case of the four plots is with a load of 7,200 amperes located 500 feet south of Wilshire and La Brea Station with a peak voltage of 28.4 volts and a maximum stray current flow of 0.04 ampere per 1,000 feet. As stated previously additional loads in the vicinity of the single load will increase stray earth currents.

Plates B-8 through B-12 show track-to-earth potentials (E_G) and stray current (I_S) plots for load locations with the traction power substation that supplied the most current now off-line. Granted, a TPSS will not be off-line indefinitely, however, the magnitudes of stray current flow and track potentials may be significant enough to effect below grade structures and personnel safety. In addition, if two loads occur in the same vicinity, stray current magnitudes will increase by a factor of about two, essentially doubling the increased effects on below grade structures. (Refer to Table B-3 for actual values.) By maintaining the track-to-earth resistance at 750 ohms per 1, 000 feet (4 rails) stray current levels are maintained at 0.10 ampere per 1,000 feet or less in four of the five cases studied with a single load. At those times when a double load occurs within the area of the substation outage, stray current levels may reach .180 ampere per 1,000 feet. Although greater than the recommended .10 ampere per 1,000 feet, .180

ampere will be tolerable because of the short time duration of the double load current and the fact that the substation outage will not exist for any significant time duration.

The one instance where excessive stray current levels may be generated would occur with the complete loss of both units at the North Hollywood substation and the presence of a maximum load. In this situation, stray current levels of .28 ampere per 1,000 feet of system will be generated. While this is above the maximum acceptable level, the more important item is the presence of an excessive unsafe track potential of 212 volts. This situation could not be tolerated for any time duration, and as such, has a higher priority than stray current control. Overall, systemwide safety must take precedence over stray current control during any substation outage, (either one or both units) since the outage will not be present for any significant time duration. This is not to infer that stray current control must be abandoned during abnormal operations. Consideration must still be given to modifying operations during such a situation to at least keep stray currents as low as practical until normal operations can be resumed. Therefore, stray current control will impact system operations by requiring that operational constraints be imposed on the system during a TPSS outage. These constraints would include consideration of restricting train operations such that maximum loads in the area adjacent to the substation outage would not exceed that required for a single train or perhaps no more than 1.30 times peak single load current. This entire situation must be carefully reviewed by both traction power and operations personnel. Of course, the expeditious correction of the substation outage, restoring normal operations, will provide the best stray current control.

Plates B-13 through B-18 show track-to-earth potentials and stray current levels that can be anticipated when operations are based on 2 minute headways and all traction power substations are 5.0 megawatt units. Those units that will be increased are shown in Table B-5. The impact of this conversion is summarized in Table B-3 under Future Operations. As indicated, increases in TPSS capacity will result in an overall reduction in stray current levels of up to 40% depending upon the location of load. The benefit will be the greatest in the area between Wilshire and Fairfax and La Brea and Sunset since four adjacent TPSS will be increased; thus reducing the amount of remote feed from other substations. Conversely, there is little to no effect in those areas where adjacent TPSS are not increased since they were originally set up as 5.0 megawatt units. This is illustrated by comparison of Plates B-14/B-3 and B-18/B-7 where total stray current has been reduced by .3% or not at all.

Overall, increasing the capacity of selected traction power substations will provide for a reduction in stray current levels by reducing track-to-earth potentials. We must point out, however, that such a change does not negate the need to establish and maintain the recommended track-to-earth resistance of 750 ohms per 1,000 feet (4 rails). Furthermore, addition of traction power substations at intermediate locations, as may occur, will also improve stray current levels. The point here is that the addition of one or two TPSS units at some

intermediate location on the system will not have a significant effect on the results presented. The one item that may impact the results significantly would be the inclusion of a passenger station not presently shown on the alignment. In this instance, a maximum load point will be established which could, depending upon the location, result in higher potentials and stray current levels. In this instance, it may be advisable to install an additional traction power substation.

Plate B-19 represents a special condition, the reduction of track-to-earth resistances in a specific area. In this case, track-to-earth resistance was set at 0.75 ohm per 1,000 feet (4 rails) between Station 402+49 and Station 473+42 with the yard isolated from the mainline. The purpose of this case is to demonstrate how a low track-to-earth resistance, located on any length of track, will increase stray current magnitudes to unacceptable levels and the importance of maintaining a high uniformly distributed track-to-earth resistance.

Plate B-19 shows track-to-earth potential (E_G) and stray current (I_S) for the low resistant section of track with the yard isolated and all TPSS on line. As shown on the stray current graph the low track-to-earth resistance results in stray current of 12.0 amperes per 1,000 feet of system. This stray current level is totally unacceptable and could result in severe metal loss on the track facilities and tunnel structure. In addition, local utility structures would be severely affected by this magnitude of stray current which could result in the failure of these structures and large subsequent costs to rectify the problems caused by the operation of the transit system on this low resistant section of track.

The graphical results discussed are summarized in Table B-3. Review of this information provides us with a number of recommendations pertaining to the constuction of the transit system. It must be pointed out that this analysis was based on a conventional running rail return transit system and the following summary and recommendations pertain to this conventional system, using the configuration as established by Table B-5 and system alignment plans dated February, 1983.

Values obtained under normal operations indicate that a track-to-earth resistance of 750 ohms per 1,000 feet (4 rails) will provide the required isolation to maintain stray current levels at .10 ampere per 1,000 feet (4 rails) or less. This level will also provide the necessary track isolation so that stray current effects are minimized under most abnormal conditions (i.e. with a TPSS off line adjacent to a load). The effect of track to earth resistances on stray current levels is summarized in Table B-4.

Yard isolation was a second result of the analysis. With the yard electrically connected into the mainline system, track-to-earth resistances are reduced to a level where the exchange of stray current between track and earth becomes significant. It was also concluded that below grade structures in the yard area will be affected by the stray current levels that would exist with the electrical connection between yard and mainline. Consequently, the yard should be electrically isolated to reduce stray current levels in the yard area. In addition,

grounded track in the shop and maintenance buildings should be electrically isolated from the yard track and a high volume resistivity ballast with a minimum clearance of one (1) inch between bottom of rail and top of ballast should be used.

Other changes to the traction power configuration, such as adding substations or increasing the capacity of substations will generally improve overall stray effects and not have a significant effect on the recommendations.

TABLE B-1

ROW 1
LEFT SIDE
CL 1 .785938 CL 2 .762573 CL 3 .75 CL 4 .75 CL 5 .75 CL 6 .75 CL 7 .75 CL 8 .75
CL 9 .75 CL 10 .75 CL 11 .75 CL 12 .75 CL 13 .75 CL 14 .75 CL 15 .75 CL 16 -.0111915
CL 17 -6.74686E-03 CL 18 0 CL 19 0 CL 20 0 CL 21 0 CL 22 0 CL 23 0
CL 24 0 CL 25 0 CL 26 0 CL 27 0 CL 28 0 CL 29 0 CL 30 0
CL 31 0 CL 32 0 CL 33 0 CL 34 0 CL 35 -5.825E-03
RIGHT SIDE= 795

ROW 2
LEFT SIDE
CL 1 .762573 CL 2 .777833 CL 3 .75 CL 4 .75 CL 5 .75 CL 6 .75 CL 7 .75 CL 8 .75
CL 9 .75 CL 10 .75 CL 11 .75 CL 12 .75 CL 13 .75 CL 14 .75 CL 15 .75 CL 16 0
CL 17 -6.74686E-03 CL 18 0 CL 19 0 CL 20 0 CL 21 0 CL 22 0 CL 23 0
CL 24 0 CL 25 0 CL 26 0 CL 27 0 CL 28 0 CL 29 0 CL 30 0
CL 31 0 CL 32 0 CL 33 0 CL 34 0 CL 35 -5.825E-03
RIGHT SIDE= 795

ROW 3
LEFT SIDE
CL 1 .75 CL 2 .75 CL 3 .771489 CL 4 .764158 CL 5 .764158 CL 6 .764158 CL 7 .764158 CL 8 .764158
CL 9 .764158 CL 10 .764158 CL 11 .764158 CL 12 .764158 CL 13 .764158 CL 14 .764158 CL 15 .764158 CL 16 0
CL 17 0 CL 18 7.62783E-03 CL 19 0 CL 20 0 CL 21 0 CL 22 0 CL 23 0
CL 24 0 CL 25 0 CL 26 0 CL 27 0 CL 28 0 CL 29 0 CL 30 0
CL 31 0 CL 32 0 CL 33 0 CL 34 0 CL 35 6.534E-03
RIGHT SIDE= 795

ROW 4
LEFT SIDE
CL 1 .75 CL 2 .75 CL 3 .764158 CL 4 .797282 CL 5 .782822 CL 6 .782822 CL 7 .782822 CL 8 .782822
CL 9 .782822 CL 10 .782822 CL 11 .782822 CL 12 .782822 CL 13 .782822 CL 14 .782822 CL 15 .782822 CL 16 0
CL 17 0 CL 18 7.62783E-03 CL 19 .013822 CL 20 0 CL 21 0 CL 22 0 CL 23 0
CL 24 0 CL 25 0 CL 26 0 CL 27 0 CL 28 0 CL 29 0 CL 30 0
CL 31 0 CL 32 0 CL 33 0 CL 34 0 CL 35 6.534E-03
RIGHT SIDE= 795

ROW 5
LEFT SIDE
CL 1 .75 CL 2 .75 CL 3 .764158 CL 4 .782822 CL 5 .810858 CL 6 .882727 CL 7 .882727 CL 8 .882727
CL 9 .882727 CL 10 .882727 CL 11 .882727 CL 12 .882727 CL 13 .882727 CL 14 .882727 CL 15 .882727 CL 16 0
CL 17 0 CL 18 7.62783E-03 CL 19 .013822 CL 20 .0138078 CL 21 0 CL 22 0
CL 23 0 CL 24 0 CL 25 0 CL 26 0 CL 27 0 CL 28 0 CL 29 0 CL 30 0
CL 31 0 CL 32 0 CL 33 0 CL 34 0 CL 35 6.534E-03
RIGHT SIDE= 795

ROW 6
LEFT SIDE
CL 1 .75 CL 2 .75 CL 3 .764158 CL 4 .782822 CL 5 .882727 CL 6 .82867 CL 7 .82134 CL 8 .82134
CL 9 .82134 CL 10 .82134 CL 11 .82134 CL 12 .82134 CL 13 .82134 CL 14 .82134 CL 15 .82134 CL 16 0
CL 17 0 CL 18 7.62783E-03 CL 19 .013822 CL 20 .0138078 CL 21 8.5883E-03
CL 22 4.48947E-03 CL 23 0 CL 24 0 CL 25 0 CL 26 0 CL 27 0
CL 28 0 CL 29 0 CL 30 0 CL 31 0 CL 32 0 CL 33 0 CL 34 0
CL 35 6.534E-03
RIGHT SIDE= 795

ROW 7
LEFT SIDE

TABLE B-1 (CONTINUED)

CL 7 .86696 CL 8 .859627
CL 9 .859627 CL 10 .859627 CL 11 .859627 CL 12 .859627 CL 13 .859627 CL 14 .859627 CL 15 .859627 CL 16 0
CL 17 0 CL 18 7.62703E-03 CL 19 .013822 CL 20 .0138078 CL 21 8.5003E-03
CL 22 4.48947E-03 CL 23 .0169339 CL 24 9.80388E-03 CL 25 0
CL 26 0 CL 27 0 CL 28 0 CL 29 0 CL 30 0 CL 31 0 CL 32 0
CL 33 0 CL 34 0 CL 35 6.534E-03
RIGHT SIDE= 795

ROW 8
LEFT SIDE
CL 1 .75 CL 2 .75 CL 3 .764158 CL 4 .782822 CL 5 .802727 CL 6 .82134 CL 7 .859627 CL 8 .889482
CL 9 .875822 CL 10 .875822 CL 11 .875822 CL 12 .875822 CL 13 .875822 CL 14 .875822 CL 15 .875822 CL 16 0
CL 17 0 CL 18 7.62703E-03 CL 19 .013822 CL 20 .0138078 CL 21 8.5003E-03
CL 22 4.48947E-03 CL 23 .0169339 CL 24 9.80388E-03 CL 25 .0106944
CL 26 0 CL 27 0 CL 28 0 CL 29 0 CL 30 0 CL 31 0 CL 32 0
CL 33 0 CL 34 0 CL 35 6.534E-03
RIGHT SIDE= 795

ROW 9
LEFT SIDE
CL 1 .75 CL 2 .75 CL 3 .764158 CL 4 .782822 CL 5 .802727 CL 6 .82134 CL 7 .859627 CL 8 .875822
CL 9 .907316 CL 10 .892856 CL 11 .892856 CL 12 .892856 CL 13 .892856 CL 14 .892856 CL 15 .892856 CL 16 0
CL 17 0 CL 18 7.62703E-03 CL 19 .013822 CL 20 .0138078 CL 21 8.5003E-03
CL 22 4.48947E-03 CL 23 .0169339 CL 24 9.80388E-03 CL 25 .0106944
CL 26 .0124352 CL 27 0 CL 28 0 CL 29 0 CL 30 0 CL 31 0
CL 32 0 CL 33 0 CL 34 0 CL 35 6.534E-03
RIGHT SIDE= 795

ROW 10
LEFT SIDE
CL 1 .75 CL 2 .75 CL 3 .764158 CL 4 .782822 CL 5 .802727 CL 6 .82134 CL 7 .859627 CL 8 .875822
CL 9 .892856 CL 10 .927941 CL 11 .913481 CL 12 .913481 CL 13 .913481 CL 14 .913481 CL 15 .913481 CL 16 0
CL 17 0 CL 18 7.62703E-03 CL 19 .013822 CL 20 .0138078 CL 21 8.5003E-03
CL 22 4.48947E-03 CL 23 .0169339 CL 24 9.80388E-03 CL 25 .0106944
CL 26 .0124352 CL 27 .0144245 CL 28 0 CL 29 0 CL 30 0
CL 31 0 CL 32 0 CL 33 0 CL 34 0 CL 35 6.534E-03
RIGHT SIDE= 795

ROW 11
LEFT SIDE
CL 1 .75 CL 2 .75 CL 3 .764158 CL 4 .782822 CL 5 .802727 CL 6 .82134 CL 7 .859627 CL 8 .875822
CL 9 .892856 CL 10 .913481 CL 11 .952519 CL 12 .938059 CL 13 .938059 CL 14 .938059 CL 15 .938059 CL 16 0
CL 17 0 CL 18 7.62703E-03 CL 19 .013822 CL 20 .0138078 CL 21 8.5003E-03
CL 22 4.48947E-03 CL 23 .0169339 CL 24 9.80388E-03 CL 25 .0106944
CL 26 .0124352 CL 27 .0144245 CL 28 .0172445 CL 29 0
CL 30 0 CL 31 0 CL 32 0 CL 33 0 CL 34 0 CL 35 6.534E-03
RIGHT SIDE= 795

ROW 12
LEFT SIDE
CL 1 .75 CL 2 .75 CL 3 .764158 CL 4 .782822 CL 5 .802727 CL 6 .82134 CL 7 .859627 CL 8 .875822
CL 9 .892856 CL 10 .913481 CL 11 .938059 CL 12 .96776 CL 13 .960426 CL 14 .960426 CL 15 .960426 CL 16 0
CL 17 0 CL 18 7.62703E-03 CL 19 .013822 CL 20 .0138078 CL 21 8.5003E-03

TABLE B-1 (CONTINUED)

CL 22 4.48947E-03	CL 23 .0169339	CL 24 9.88388E-03	CL 25 .0106944			
CL 26 .0124352	CL 27 .0144245	CL 28 .0172445	CL 29 .0156683			
CL 30 0	CL 31 0	CL 32 0	CL 33 0	CL 34 0	CL 35 6.534E-03	

RIGHT SIDE= 795

ROW 13
LEFT SIDE

CL 1 .75	CL 2 .75	CL 3 .764158	CL 4 .782822	CL 5 .882727	CL 6 .82134	CL 7 .859627	CL 8 .875822
CL 9 .892856	CL 10 .913481	CL 11 .938859	CL 12 .960426	CL 13 1.01683	CL 14 1.00237	CL 15 1.00237	CL 16 0
CL 17 0	CL 18 7.62703E-03	CL 19 .013822	CL 20 .0138078	CL 21 8.5803E-03			
CL 22 4.48947E-03	CL 23 .0169339	CL 24 9.88388E-03	CL 25 .0106944				
CL 26 .0124352	CL 27 .0144245	CL 28 .0172445	CL 29 .0156683				
CL 30 .0164138	CL 31 .0129322	CL 32 0	CL 33 0	CL 34 0			
CL 35 6.534E-03							

RIGHT SIDE= 795

ROW 14
LEFT SIDE

CL 1 .75	CL 2 .75	CL 3 .764158	CL 4 .782822	CL 5 .882727	CL 6 .82134	CL 7 .859627	CL 8 .875822
CL 9 .892856	CL 10 .913481	CL 11 .938859	CL 12 .960426	CL 13 1.00237	CL 14 1.02928	CL 15 1.02195	CL 16 0
CL 17 0	CL 18 7.62703E-03	CL 19 .013822	CL 20 .0138078	CL 21 8.5803E-03			
CL 22 4.48947E-03	CL 23 .0169339	CL 24 9.88388E-03	CL 25 .0106944				
CL 26 .0124352	CL 27 .0144245	CL 28 .0172445	CL 29 .0156683				
CL 30 .0164138	CL 31 .0129322	CL 32 .0136778	CL 33 0				
CL 34 0	CL 35 6.534E-03						

RIGHT SIDE= 795

ROW 15
LEFT SIDE

CL 1 .75	CL 2 .75	CL 3 .764158	CL 4 .782822	CL 5 .882727	CL 6 .82134	CL 7 .859627	CL 8 .875822
CL 9 .892856	CL 10 .913481	CL 11 .938859	CL 12 .960426	CL 13 1.00237	CL 14 1.02195	CL 15 1.07088	CL 16 0
CL 17 0	CL 18 7.62703E-03	CL 19 .013822	CL 20 .0138078	CL 21 8.5803E-03			
CL 22 4.48947E-03	CL 23 .0169339	CL 24 9.88388E-03	CL 25 .0106944				
CL 26 .0124352	CL 27 .0144245	CL 28 .0172445	CL 29 .0156683				
CL 30 .0164138	CL 31 .0129322	CL 32 .0136778	CL 33 .0149216				
CL 34 .014176	CL 35 6.534E-03						

RIGHT SIDE= 795

ROW 16
LEFT SIDE

CL 1 -.0111915	CL 2 0	CL 3 0	CL 4 0	CL 5 0	CL 6 0	CL 7 0	CL 8 0
CL 9 0	CL 10 0	CL 11 0	CL 12 0	CL 13 0	CL 14 0	CL 15 0	CL 16 488.448
CL 17 -207.958	CL 18 0	CL 19 0	CL 20 0	CL 21 0	CL 22 0	CL 23 0	CL 24 0
CL 25 0	CL 26 0	CL 27 0	CL 28 0	CL 29 0	CL 30 0	CL 31 0	CL 32 0
CL 33 0	CL 34 0	CL 35 0					

RIGHT SIDE= 0

ROW 17
LEFT SIDE

CL 1 -6.74686E-03	CL 2 -6.74686E-03	CL 3 0	CL 4 0	CL 5 0	CL 6 0

TABLE B-1 (CONTINUED)

CL 7 0 CL 8 0 CL 9 0 CL 10 0 CL 11 0 CL 12 0 CL 13 0 CL 14 0
CL 15 0 CL 16 -207.958 CL 17 467.48 CL 18 -259.516 CL 19 0 CL 20 0 CL 21 0 CL 22 0
CL 23 0 CL 24 0 CL 25 0 CL 26 0 CL 27 0 CL 28 0 CL 29 0 CL 30 0
CL 31 0 CL 32 0 CL 33 0 CL 34 0 CL 35 0
RIGHT SIDE= 0

ROW 18
LEFT SIDE
CL 1 0 CL 2 0 CL 3 7.62703E-03 CL 4 7.62703E-03 CL 5 7.62703E-03
CL 6 7.62703E-03 CL 7 7.62703E-03 CL 8 7.62703E-03 CL 9 7.62703E-03
CL 10 7.62703E-03 CL 11 7.62703E-03 CL 12 7.62703E-03 CL 13 7.62703E-03
CL 14 7.62703E-03 CL 15 7.62703E-03 CL 16 0 CL 17 -259.516 CL 18 448.181
CL 19 -188.658 CL 20 0 CL 21 0 CL 22 0 CL 23 0 CL 24 0 CL 25 0 CL 26 0
CL 27 0 CL 28 0 CL 29 0 CL 30 0 CL 31 0 CL 32 0 CL 33 0 CL 34 0
CL 35 0
RIGHT SIDE= 0

ROW 19
LEFT SIDE
CL 1 0 CL 2 0 CL 3 0 CL 4 .013822 CL 5 .013822 CL 6 .013822 CL 7 .013822 CL 8 .013822
CL 9 .013822 CL 10 .013822 CL 11 .013822 CL 12 .013822 CL 13 .013822 CL 14 .013822 CL 15 .013822 CL 16 0
CL 17 0 CL 18 -188.658 CL 19 319.124 CL 20 -138.453 CL 21 0 CL 22 0 CL 23 0 CL 24 0
CL 25 0 CL 26 0 CL 27 0 CL 28 0 CL 29 0 CL 30 0 CL 31 0 CL 32 0
CL 33 0 CL 34 0 CL 35 0
RIGHT SIDE= 0

ROW 20
LEFT SIDE
CL 1 0 CL 2 0 CL 3 0 CL 4 0 CL 5 .0138078 CL 6 .0138078 CL 7 .0138078 CL 8 .0138078
CL 9 .0138078 CL 10 .0138078 CL 11 .0138078 CL 12 .0138078 CL 13 .0138078
CL 14 .0138078 CL 15 .0138078 CL 16 0 CL 17 0 CL 18 0
CL 19 -138.453 CL 20 304.838 CL 21 -166.371 CL 22 0 CL 23 0 CL 24 0 CL 25 0 CL 26 0
CL 27 0 CL 28 0 CL 29 0 CL 30 0 CL 31 0 CL 32 0 CL 33 0 CL 34 0
CL 35 0
RIGHT SIDE= 0

ROW 21
LEFT SIDE
CL 1 0 CL 2 0 CL 3 0 CL 4 0 CL 5 0 CL 6 8.5003E-03 CL 7 8.5003E-03
CL 8 8.5003E-03 CL 9 8.5003E-03 CL 10 8.5003E-03 CL 11 8.5003E-03
CL 12 8.5003E-03 CL 13 8.5003E-03 CL 14 8.5003E-03 CL 15 8.5003E-03
CL 16 0 CL 17 0 CL 18 0 CL 19 0 CL 20 -166.371 CL 21 453.571 CL 22 -287.191
CL 23 0 CL 24 0 CL 25 0 CL 26 0 CL 27 0 CL 28 0 CL 29 0 CL 30 0
CL 31 0 CL 32 0 CL 33 0 CL 34 0 CL 35 0
RIGHT SIDE= 0

ROW 22
LEFT SIDE
CL 1 0 CL 2 0 CL 3 0 CL 4 0 CL 5 0 CL 6 4.48947E-03 CL 7 4.48947E-03
CL 8 4.48947E-03 CL 9 4.48947E-03 CL 10 4.48947E-03 CL 11 4.48947E-03
CL 12 4.48947E-03 CL 13 4.48947E-03 CL 14 4.48947E-03 CL 15 4.48947E-03
CL 16 0 CL 17 0 CL 18 0 CL 19 0 CL 20 0 CL 21 -287.191 CL 22 461.331
CL 23 -174.135 CL 24 0 CL 25 0 CL 26 0 CL 27 0 CL 28 0 CL 29 0 CL 30 0
CL 31 0 CL 32 0 CL 33 0 CL 34 0 CL 35 0

TABLE B-1 (CONTINUED)

RIGHT SIDE= 0

ROW 23
LEFT SIDE
CL 1 0 CL 2 0 CL 3 0 CL 4 0 CL 5 0 CL 6 0 CL 7 .0169339 CL 8 .0169339
CL 9 -.0169339 CL 10 -.0169339 CL 11 -.0169339 CL 12 -.0169339 CL 13 -.0169339
CL 14 .0169339 CL 15 .0169339 CL 16 0 CL 17 0 CL 18 0
CL 19 0 CL 20 0 CL 21 0 CL 22 -174.135 CL 23 313.674 CL 24 -139.522 CL 25 0 CL 26 0
CL 27 0 CL 28 0 CL 29 0 CL 30 0 CL 31 0 CL 32 0 CL 33 0 CL 34 0
CL 35 0
RIGHT SIDE= 0

ROW 24
LEFT SIDE
CL 1 0 CL 2 0 CL 3 0 CL 4 0 CL 5 0 CL 6 0 CL 7 9.80388E-03
CL 8 9.80388E-03 CL 9 9.80388E-03 CL 10 9.80388E-03 CL 11 9.80388E-03
CL 12 9.80388E-03 CL 13 9.80388E-03 CL 14 9.80388E-03 CL 15 9.80388E-03
CL 16 0 CL 17 0 CL 18 0 CL 19 0 CL 20 0 CL 21 0 CL 22 0
CL 23 -139.522 CL 24 321.526 CL 25 -181.995 CL 26 0 CL 27 0 CL 28 0 CL 29 0 CL 30 0
CL 31 0 CL 32 0 CL 33 0 CL 34 0 CL 35 0
RIGHT SIDE= 0

ROW 25
LEFT SIDE
CL 1 0 CL 2 0 CL 3 0 CL 4 0 CL 5 0 CL 6 0 CL 7 0 CL 8 .0186944
CL 9 .0186944 CL 10 .0186944 CL 11 .0186944 CL 12 .0186944 CL 13 .0186944
CL 14 -.0186944 CL 15 -.0186944 CL 16 0 CL 17 0 CL 18 0
CL 19 0 CL 20 0 CL 21 0 CL 22 0 CL 23 0 CL 24 -181.995 CL 25 343.295 CL 26 -161.29
CL 27 0 CL 28 0 CL 29 0 CL 30 0 CL 31 0 CL 32 0 CL 33 0 CL 34 0
CL 35 0
RIGHT SIDE= 0

ROW 26
LEFT SIDE
CL 1 0 CL 2 0 CL 3 0 CL 4 0 CL 5 0 CL 6 0 CL 7 0 CL 8 0
CL 9 -.0124352 CL 10 -.0124352 CL 11 -.0124352 CL 12 -.0124352 CL 13 -.0124352
CL 14 .0124352 CL 15 .0124352 CL 16 0 CL 17 0 CL 18 0
CL 19 0 CL 20 0 CL 21 0 CL 22 0 CL 23 0 CL 24 0 CL 25 -161.29 CL 26 388.193
CL 27 -138.89 CL 28 0 CL 29 0 CL 30 0 CL 31 0 CL 32 0 CL 33 0 CL 34 0
CL 35 0
RIGHT SIDE= 0

ROW 27
LEFT SIDE
CL 1 0 CL 2 0 CL 3 0 CL 4 0 CL 5 0 CL 6 0 CL 7 0 CL 8 0
CL 9 0 CL 10 .0144245 CL 11 .0144245 CL 12 .0144245 CL 13 .0144245
CL 14 .0144245 CL 15 .0144245 CL 16 0 CL 17 0 CL 18 0
CL 19 0 CL 20 0 CL 21 0 CL 22 0 CL 23 0 CL 24 0 CL 25 0 CL 26 -138.89
CL 27 256.7 CL 28 -117.795 CL 29 0 CL 30 0 CL 31 0 CL 32 0 CL 33 0 CL 34 0
CL 35 0
RIGHT SIDE= 0

ROW 28
LEFT SIDE
CL 1 0 CL 2 0 CL 3 0 CL 4 0 CL 5 0 CL 6 0 CL 7 0 CL 8 0
CL 9 0 CL 10 0 CL 11 .0172445 CL 12 .0172445 CL 13 .0172445
CL 14 -.0172445 CL 15 -.0172445 CL 16 0 CL 17 0 CL 18 0
CL 19 0 CL 20 0 CL 21 0 CL 22 0 CL 23 0 CL 24 0 CL 25 0 CL 26 0

TABLE B-1 (CONTINUED)

CL 27 -117.795 CL 28 231.156 CL 29 -113.344 CL 30 0 CL 31 0 CL 32 0 CL 33 0 CL 34 0
CL 35 0
RIGHT SIDE= 0

ROW 29
LEFT SIDE
CL 1 0 CL 2 0 CL 3 0 CL 4 0 CL 5 0 CL 6 0 CL 7 0 CL 8 0
CL 9 0 CL 10 0 CL 11 0 CL 12 .0156683 CL 13 .0156683 CL 14 .0156683
CL 15 .0156683 CL 16 0 CL 17 0 CL 18 0 CL 19 0 CL 20 0 CL 21 0
CL 22 0 CL 23 0 CL 24 0 CL 25 0 CL 26 0 CL 27 0 CL 28 -113.344
CL 29 229.639 CL 30 -116.279 CL 31 0 CL 32 0 CL 33 0 CL 34 0 CL 35 0
RIGHT SIDE= 0

ROW 30
LEFT SIDE
CL 1 0 CL 2 0 CL 3 0 CL 4 0 CL 5 0 CL 6 0 CL 7 0 CL 8 0
CL 9 0 CL 10 0 CL 11 0 CL 12 0 CL 13 .0164138 CL 14 .0164138
CL 15 .0164138 CL 16 0 CL 17 0 CL 18 0 CL 19 0 CL 20 0 CL 21 0
CL 22 0 CL 23 0 CL 24 0 CL 25 0 CL 26 0 CL 27 0 CL 28 0
CL 29 -116.279 CL 30 243.414 CL 31 -127.119 CL 32 0 CL 33 0 CL 34 0 CL 35 0
RIGHT SIDE= 0

ROW 31
LEFT SIDE
CL 1 0 CL 2 0 CL 3 0 CL 4 0 CL 5 0 CL 6 0 CL 7 0 CL 8 0
CL 9 0 CL 10 0 CL 11 0 CL 12 0 CL 13 .0129322 CL 14 .0129322
CL 15 .0129322 CL 16 0 CL 17 0 CL 18 0 CL 19 0 CL 20 0 CL 21 0
CL 22 0 CL 23 0 CL 24 0 CL 25 0 CL 26 0 CL 27 0 CL 28 0
CL 29 0 CL 30 -127.119 CL 31 267.319 CL 32 -140.187 CL 33 0 CL 34 0 CL 35 0
RIGHT SIDE= 0

ROW 32
LEFT SIDE
CL 1 0 CL 2 0 CL 3 0 CL 4 0 CL 5 0 CL 6 0 CL 7 0 CL 8 0
CL 9 0 CL 10 0 CL 11 0 CL 12 0 CL 13 0 CL 14 .0136778 CL 15 .0136778
CL 16 0 CL 17 0 CL 18 0 CL 19 0 CL 20 0 CL 21 0 CL 22 0
CL 23 0 CL 24 0 CL 25 0 CL 26 0 CL 27 0 CL 28 0 CL 29 0 CL 30 0
CL 31 -140.187 CL 32 278.636 CL 33 -138.435 CL 34 0 CL 35 0
RIGHT SIDE= 0

ROW 33
LEFT SIDE
CL 1 0 CL 2 0 CL 3 0 CL 4 0 CL 5 0 CL 6 0 CL 7 0 CL 8 0
CL 9 0 CL 10 0 CL 11 0 CL 12 0 CL 13 0 CL 14 0 CL 15 .0149216
CL 16 0 CL 17 0 CL 18 0 CL 19 0 CL 20 0 CL 21 0 CL 22 0
CL 23 0 CL 24 0 CL 25 0 CL 26 0 CL 27 0 CL 28 0 CL 29 0 CL 30 0
CL 31 0 CL 32 -138.435 CL 33 258.655 CL 34 -128.205 CL 35 0
RIGHT SIDE= 0

ROW 34
LEFT SIDE
CL 1 0 CL 2 0 CL 3 0 CL 4 0 CL 5 0 CL 6 0 CL 7 0 CL 8 0
CL 9 0 CL 10 0 CL 11 0 CL 12 0 CL 13 0 CL 14 0 CL 15 .014176 CL 16 0
CL 17 0 CL 18 0 CL 19 0 CL 20 0 CL 21 0 CL 22 0 CL 23 0 CL 24 0
CL 25 0 CL 26 0 CL 27 0 CL 28 0 CL 29 0 CL 30 0 CL 31 0 CL 32 0
CL 33 -128.205 CL 34 391.377 CL 35 0
RIGHT SIDE= 0

ROW 35
LEFT SIDE
CL 1 -5.925E-02 CL 2 -5.925E-02 CL 3 6.524E-02 CL 4 6.524E-02

TABLE B-1 (CONTINUED)

```
CL 5  6.534E-03   CL 6  6.534E-03   CL 7  6.534E-03   CL 8  6.534E-03
CL 9  6.534E-03   CL 10 6.534E-03   CL 11 6.534E-03   CL 12 6.534E-03
CL 13 6.534E-03   CL 14 6.534E-03   CL 15 6.534E-03   CL 16 0   CL 17 0
CL 18 0           CL 19 0           CL 20 0           CL 21 0   CL 22 0   CL 23 0   CL 24 0
CL 25 0           CL 26 0           CL 27 0           CL 28 0   CL 29 0   CL 30 0   CL 31 0   CL 32 0
CL 33 0           CL 34 0           CL 35 .02472
RIGHT SIDE= 0
```

TABLE B-1A

X(1) = 188.767
ERROR= 4.54747E-13
X(2) = 385.799
ERROR= 4.68958E-13
X(3) = 436.337
ERROR= 5.11591E-13
X(4) = 73.2335
ERROR= 5.68434E-13
X(5) = 31.9967
ERROR= 5.48813E-13
X(6) = 8.8779
ERROR= 5.82645E-13
X(7) = 1.84388
ERROR= 5.96856E-13
X(8) = .283343
ERROR= 5.96856E-13
X(9) = .0739455
ERROR= 6.11867E-13
X(10) = .0263229
ERROR= 6.39489E-13
X(11) = 9.4263E-03
ERROR= 6.53699E-13
X(12) = 7.61488E-03
ERROR= 6.6791E-13
X(13) = 3.36413E-03
ERROR= 7.18543E-13
X(14) = 4.48851E-03
ERROR= 7.24754E-13
X(15) = 2.96336E-03
ERROR= 7.38965E-13
X(16) =-1.78288E-03
ERROR= 1.66534E-16
X(17) =-.0142777
ERROR 0
X(18) =-.0371483
ERROR= 5.77316E-15
X(19) =-.0467483
ERROR= 4.66294E-15
X(20) =-.0484742
ERROR= 6.10623E-15
X(21) =-.0464812
ERROR= 5.18783E-15
X(22) =-.0458483
ERROR= 4.77396E-15
X(23) =-.0424426
ERROR= 4.21885E-15
X(24) =-.0398288
ERROR= 5.55112E-15
X(25) =-.0363396
ERROR= 5.18783E-15
X(26) =-.0332853
ERROR= 1.77636E-15
X(27) =-.0297382
ERROR= 3.65311E-15
X(28) =-.0255355
ERROR= 1.85471E-15
X(29) =-.0211757
ERROR= 1.27676E-15

TABLE B-1A (CONTINUED)

X, 30 =. 0169264
ERROR-1.94289E-16
X, 31 =. 0138402
ERROR-1.11822E-15
X, 32 =-9.5164E-03
ERROR-6.38378E-16
X, 33 =-5.72943E-03
ERROR-3.53684E-16
X, 34 =-1.87692E-03
ERROR-1.249E-16
X, 35 =29.1863
ERROR-5.82867E-16

TABLE B-2

TOTAL CURRENT = 1045.59 AMPERES
X 1 = 18.05%OF TOTAL CURRENT
X 2 = 29.25%OF TOTAL CURRENT
X 3 = 41.73%OF TOTAL CURRENT
X 4 = 7.08%OF TOTAL CURRENT
X 5 = 3.06%OF TOTAL CURRENT
X 6 = 0.77%OF TOTAL CURRENT
X 7 = 0.18%OF TOTAL CURRENT
X 8 = 0.02%OF TOTAL CURRENT
X 9 = 0.01%OF TOTAL CURRENT
X 10 = 0.00%OF TOTAL CURRENT
X 11 = 0.00%OF TOTAL CURRENT
X 12 = 0.00%OF TOTAL CURRENT
X 13 = 0.00%OF TOTAL CURRENT
X 14 = 0.00%OF TOTAL CURRENT
X 15 = 0.00%OF TOTAL CURRENT

ACTUAL LOAD CURRENT = 7200 AMPERES
RAIL TO EARTH RESISTANCE = 750 OHMS/1000
LOAD FACTOR = 6.88608

BR. NO.	BRANCH CURRENT AMPERES	BRANCH RESISTANCE OHMS	BRANCH VOLTAGE VOLTS	ACT. BR. CUR. AMPERES	ACT. BR. VOLT. VOLTS	STRAY CUR. AMPERES/ 1000	RAIL RES. OHMS/ 1000
16	1.78288E-03	272.48	.485799	.0122771	3.34525	4.46834E-03	750
17	.0124949	207.958	2.59841	.0868487	17.8928	.0238571	750
18	.0228705	259.516	5.93526	.157488	40.8787	.0544943	750
19	9.592E-03	188.658	1.73287	.0668513	11.9327	.0159183	750
20	1.73395E-03	138.453	.240871	.0119481	1.65315	2.2042E-03	750
21	-1.99380E-03	166.371	-.331582	-.0137242	-2.2833	-3.04441E-03	750
22	-1.43291E-03	287.191	-.411519	-9.86715E-03	-2.83376	-3.77834E-03	750
23	-2.68564E-03	174.135	-.453733	-.0179427	-3.12444	-4.16593E-03	750
24	-3.41381E-03	139.522	-.476381	-.0235878	-3.27985	-4.37313E-03	750
25	-2.68927E-03	181.995	-.489433	-.0185185	-3.37028	-4.49371E-03	750
26	-3.85422E-03	161.29	-.492616	-.0218316	-3.39219	-4.52292E-03	750
27	-3.55516E-03	138.89	-.493776	-.0244811	-3.40818	-4.53357E-03	750
28	-4.19467E-03	117.795	-.494111	-.0288848	-3.40249	-4.53665E-03	750
29	-4.3598E-03	113.344	-.494157	-.0300219	-3.40281	-4.53708E-03	750
30	-4.24933E-03	116.279	-.494187	-.0292612	-3.40246	-4.53662E-03	750
31	-3.88623E-03	127.119	-.494014	-.0267689	-3.40182	-4.53576E-03	750
32	-3.52375E-03	140.187	-.493984	-.0242648	-3.40162	-4.53549E-03	750
33	-3.78697E-03	130.435	-.493953	-.0260774	-3.4014	-4.5352E-03	750
34	-3.85251E-03	128.285	-.493911	-.0265287	-3.40111	-4.53482E-03	750
35	-1.87692E-03	263.158	-.493927	-.0129246	-3.40122	-4.53496E-03	750

TOTAL STRAY CURRENTS = .333797 AMPERES
TOTAL STRAY CURRENTS = -.333797 AMPERES

TABLE B-3

Summary of Track-To-Earth Potential and Stray Current Levels

Plate No.	Load Location	Yard Status	Track-To-Earth Potentials		Stray Earth Current[1]				
			Maximum At Load (Volts)	Minimum Remote (Volts)	Maximum At Load (Amp/1000')	Minimum Remote (Amp/1000')	Total (Amperes)	Current In Yard Actual (Amperes)	% of Total
			NORMAL OPERATIONS (3.5 minute headways)						
B-2	5th & Hill	Connected	37.7	-6.6	.050	-.0088	.670	.406	60.5
B-2	5th & Hill	Isolated	40.9	-3.4	.055	-.0045	.334	-	-
B-3	Wilshire & Normandie	Connected	37.4	-.08	.050	-.0001	.419	.416	99.3
B-3	Wilshire & Normandie	Isolated	34.1	-3.4	.046	-.0046	.295	-	-
B-4	500' South of Wilshire & La Brea	Isolated	28.4	-4.4	.038	-.0059	.307	-	-
B-5	Wilshire & Crenshaw	Isolated	34.0	-3.5	.045	-.0047	.295	-	-
B-6	500' North of Beverly & Fairfax	Isolated	35.3	-4.9	.048	-.0065	.372	-	-
B-7	500' South of N. Hollywood	Isolated	35.8	-3.1	.048	-.0042	.310	-	-
			ABNORMAL OPERATIONS						
B-8	5th & Hill with 7th & Flower TPSS Off Line	Isolated	56.7	-6.5	.076	-.0086	.621	-	-
B-9	Wilshire & Normandie with Wilshire & Western TPSS Off-Line	Isolated	58.7	-8.2	.078	-.011	.703	-	-
B-10	500' South of Wilshire & La Brea; Wilshire & La Brea TPSS Off Line	Isolated	71.8	-11.3	.096	-.015	.853	-	-
B-11	500' North of Fairfax & Beverly; Fairfax & Beverly TPSS Off Line	Isolated	63.9	-13.0	.085	-.017	.707	-	-
B-12	500' South of Hollywood; North Hollywood TPSS Off Line	Isolated	211.7	-18.5	.282	-.025	1.85	-	-

TABLE B -3

(continued...)

Summary of Track-To-Earth Potential and Stray Current Levels

Plate No.	Load Location	Yard Status	Track-To-Earth Potentials: Maximum At Load (Volts)	Track-To-Earth Potentials: Minimum Remote (Volts)	Stray Earth Current[1]: Maximum At Load (Amp/1000')	Stray Earth Current[1]: Minimum Remote (Amp/1000')	Stray Earth Current[1]: Total (Amperes)	% Reduction Compared to 3.5 Min. Headways
			FUTURE OPERATIONS (2 minute headways)					
B-13	5th & Hill	Isolated	37.2	-2.7	.050	-.0037	.270	19.%
B-14	Wilshire & Normandie	Isolated	34.1	-3.3	.045	-.0044	.294	0.3%
B-15	500' South of Wilshire & La Brea	Isolated	27.9	-3.9	.037	-.0053	.289	5.9%
B-16	Wilshire & Crenshaw	Isolated	26.3	-2.55	.035	-.0034	.219	26.%
B-17	500' North of Beverely & Fairfax	Isolated	25.4	-4.3	.034	-.0057	.222	40.%
B-18	500' South of North Hollywood	Isolated	35.9	-3.0	.049	-.0040	.310	0%
			SPECIAL CONDITIONS (3.5 minute headways)					
B-19	500' South of Wilshire & La Brea with Track-to-Earth Resistance between Station 402+49 and 473+42 at .75 ohm/1,000' (4 rails). All other track at 750 ohms/1,000'.	Isolated	9.0	-23.7	12.0	-.032	23.8	-

1 Values shown determined with track-to-earth resistances at 750 ohms per 1,000 feet (4 rails) and a maximum load current of 7,200 amperes per six car train.

TABLE B-4

Summary of Maximum Stray Current Levels For Various Track-to-Earth Resistance

Load Location	Yard Status	Maximum Stray Current At Load (Amperes/1,000 Feet)[1] Track-To-Earth Resistances .75 Ohms/1000'	7.5 Ohms/1000'	75 Ohms/1000'	750 ohms/1000'
5th & Hill	Connected	50.	5.0	0.50	.050
5th & Hill	Isolated	55.	5.5	0.55	.055
Wilshire & Normandie	Connected	50.	5.0	0.50	.050
Wilshire & Normandie	Isolated	46.	4.6	0.46	.046
500 Feet South of Wilshire & La Brea	Isolated	38.	3.8	0.38	.038
Wilshire & Crenshaw	Isolated	45.	4.5	0.45	.045
500 Feet North of Beverly & Fairfax	Isolated	39.	3.9	0.39	.039
500 Feet South of North Hollywood	Isolated	48.	4.8	0.38	.048

[1] These values have been calculated using a single load of 7200 amperes. Values will increase by approximately two for a second load at the same location.

TABLE B-5

MAINLINE TRACTION POWER SUBSTATION LOCATIONS AND CAPACITIES*

ITEM NO.	NEAREST PASSENGER STATION	APPROXIMATE STATIONING	NUMBER & CAPACITY (MW) OF TRANSFORMER-RECTIFIER UNITS	
			3½ Min. Headway	2 Min. Headway
1	Union Station	102	2-2.5	2-2.5
2	Civic Center	147	1-2.5	2-2.5
3	Seventh/Flower	206	2-2.5	2-2.5
4	Wilshire/Alvarado	257	1-2.5	2-2.5
5	Wilshire/Vermont	312	2-2.5	2-2.5
6	Wilshire/Western	366	2-2.5	2-2.5
7	Wilshire/La Brea	472	2-2.5	2-2.5
8	Wilshire/Fairfax	516	1-2.5	2-2.5
9	Fairfax/Beverly	566	1-2.5	2-2.5
10	Fairfax/Santa Monica	625	1-2.5	2-2.5
11	La Brea/Sunset	694	1-2.5	2-2.5
12	Hollywood/Cahuenga	757	2-2.5	2-2.5
13	Intermediate	875	1-2.5	2-2.5
14	Universal City	930	2-2.5	2-2.5
15	North Hollywood	1047	2-2.5	2-2.5

*For basic route alignment with sixteen (16) passenger stations.

PLATE B-1

100+00 UNION 105+32 | CIVIC CENTER 149+38 | 5TH HILL 174+26 | 200+00 7TH FLOWER 202+68 | WILSHIRE ALVARADO 260+54 | 300+00 WILSHIRE VERMONT 316+52 | WILSHIRE NORMANDIE 347+95 | WILSHIRE WESTERN 368+66 | 400+00 | WILSHIRE LA BREA 476+17 | 500+00 WILSHIRE FAIRFAX 513+41 | FAIRFAX BEVERLY 569+47 | 600+00 | FAIRFAX SANTA MONICA 626+70 | 650+00

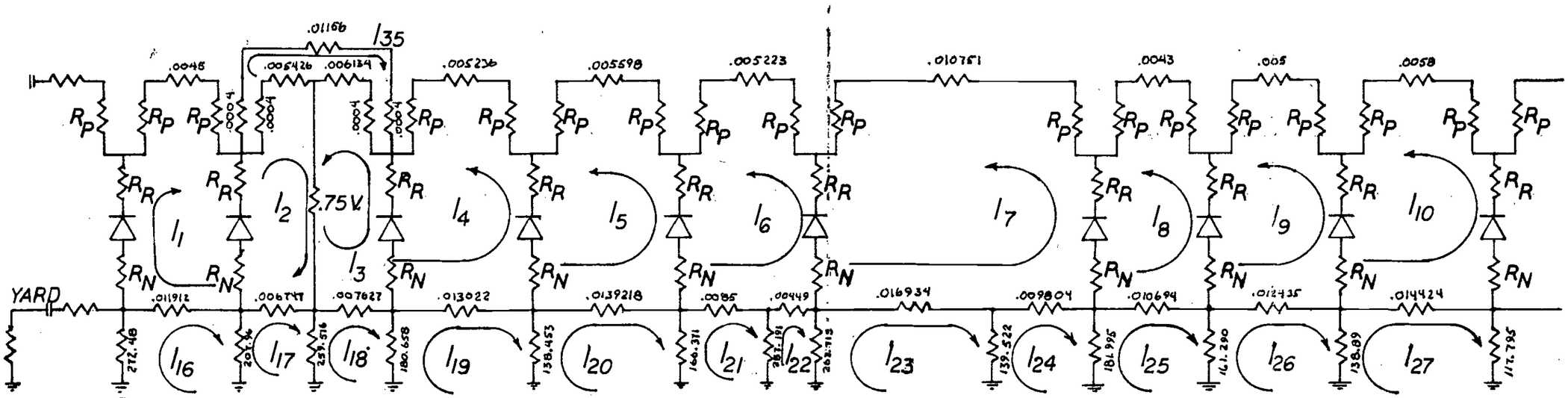

4500 — 2713 — 3067 — 5236 — 5598 — 3418 — 1805 — 6809 — 3942 — 4300 — 5000 — 5800

NOTE:

R_P = .0002 OHM

R_N = .0002 OHM

R_R { 2.5 MW = .014260 OHM
5.0 MW = 0071292 OHM

PLATE B-1
(CONTINUED)

650+00

SUNSET / LA BREA 700+00
696+29

HOLLYWOOD / CAHUENGA 800+00
752+09

– TPSS 900+00
875+00

UNIVERSAL / CITY 1000+00
938+46

NORTH / HOLLYWOOD 1100+00
1050+30

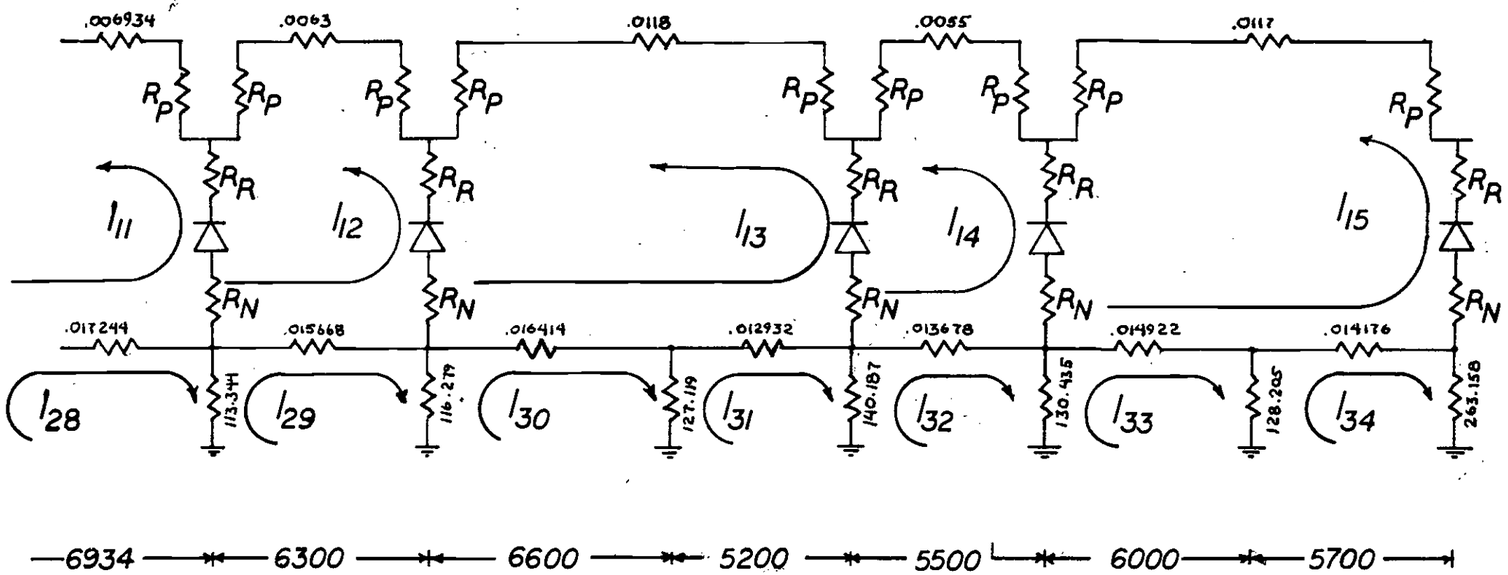

NOTE: ALL TPSS LOOPS ORIGINATE AT THEIR RESPECTIVE SUBSTATIONS, PASS THROUGH THE LOAD AND TERMINATE AT SUBSTATIONS WHERE THEY ORIGINATED.

PLATE B-2

LOAD LOCATION: 5TH AND HILL
TRACK RESISTANCE: 750 OHMS/1000 F.T. (4 RAILS)
SUBSTATION STATUS: BASE CONDITIONS, ALL 15 TPSS ON LINE

LEGEND:
- ⓟ = PASSENGER STATION
- ▲ = TRACTION POWER SUBSTATION

TRACK-TO-EARTH POTENTIAL E_{TE} VOLTS

60
40
20
0
-20

40.9
37.8
YARD ISOLATED
YARD TIED IN
LOAD
3.34
.13
-3.40
-6.60

% TPSS DISTRIBUTION: 18.0 | 19 | 11.7 | 7.0 | 3.1 | 9 | .02 | .01

105+32 UNION
149+38 CIVIC CENTER
174+28 5TH
202+68 7TH
260+54 ALVARADO
316+52 VERMONT
347+95 NORMANDIE
368+66 WESTERN
476+17 LA BREA
513+41 FAIRFAX
569+47 BEVERLY
626+70 SANTA MONICA
696+29 SUNSET
752+09 CAHUENGA
875+00 TPSS
933+48 UNIVERSAL CITY
1050+39 NORTH HOLLYWOOD

STRAY CURRENT I_S AMPERES / 1000 FEET

0.06
0.04
0.02
0
-0.02

.054
.050
YARD ISOLATED
YARD TIED IN
.0045
.00017
TOTAL I_S = 0.33 AMPERE
TOTAL I_S = 0.67 AMPERE
-.0045
-.0089

20FH-30J 10X10 PER INCH
LITHO IN U.S.A.

*TELEDYNE POST

PLATE B-3

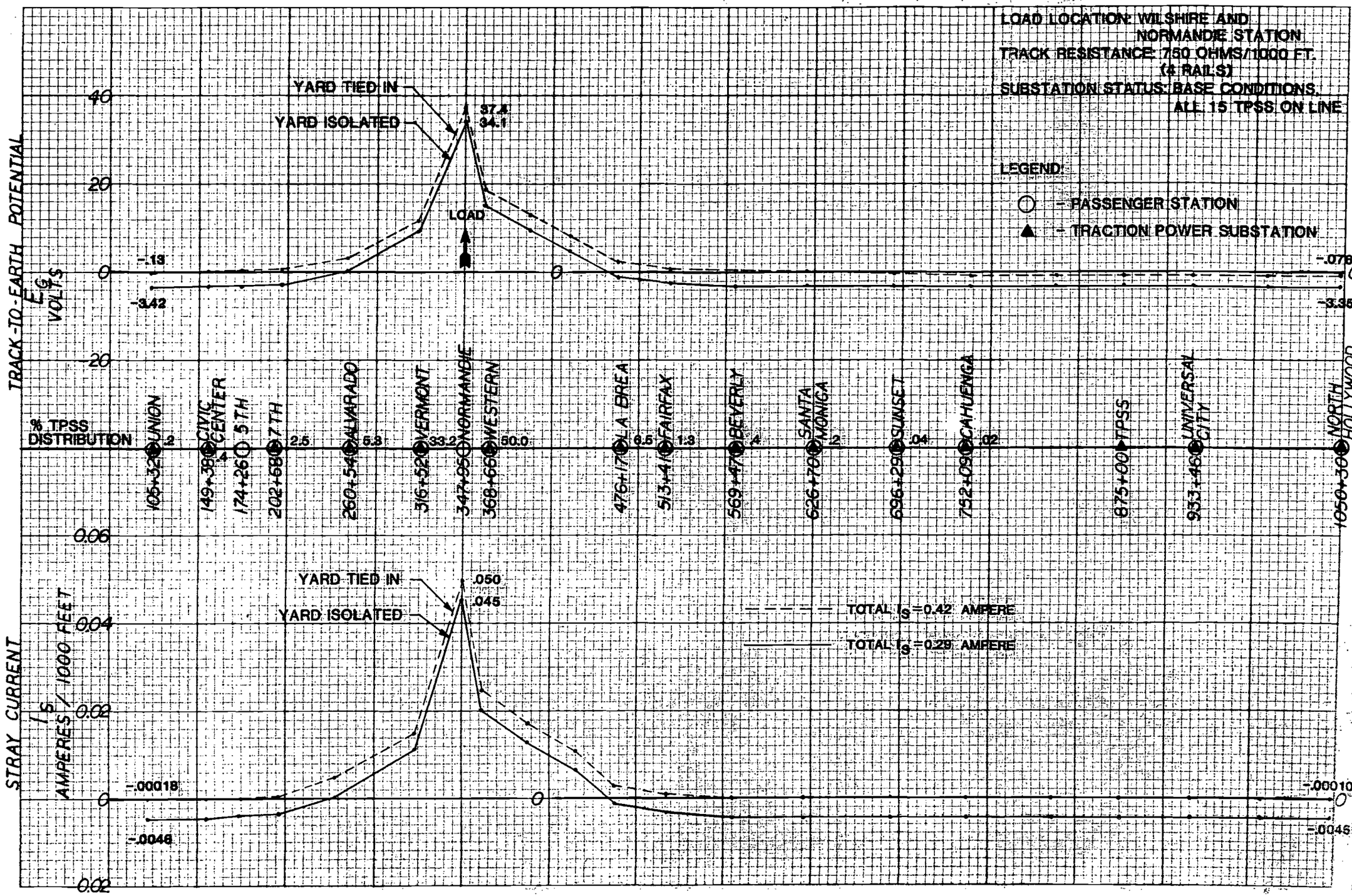

TELEDYNE POST
20PH-30J 10X10 PER INCH LITHO IN U.S.A.

PLATE B-4

LOAD LOCATION: 500 FT. S. OF WILSHIRE AND LA BREA STATION
TRACK RESISTANCE: 750 OHMS/1000 FT. (4 RAILS)
YARD STATUS: YARD ISOLATED FROM MAIN LINE
SUBSTATION STATUS: BASE CONDITIONS, ALL 15 TPSS ON LINE

LEGEND:
○ = PASSENGER STATION
▲ = TRACTION POWER SUBSTATION

TRACK-TO-EARTH POTENTIAL E_S VOLTS

30
20
10
0
10

28.4
LOAD
0
-4.39
-3.13

% TPSS DISTRIBUTION

| | | |

PLATE B-5

LOAD LOCATION: 500 FT. N. OF WILSHIRE & CRENSHAW STATION
TRACK RESISTANCE: 750 OHMS/1000 FT. (4RAILS)
SUBSTATION STATUS: BASE CONDITIONS, ALL 16 TPSS ON LINE

LEGEND:
○ - PASSENGER STATION
▲ - TRACTION POWER SUBSTATION

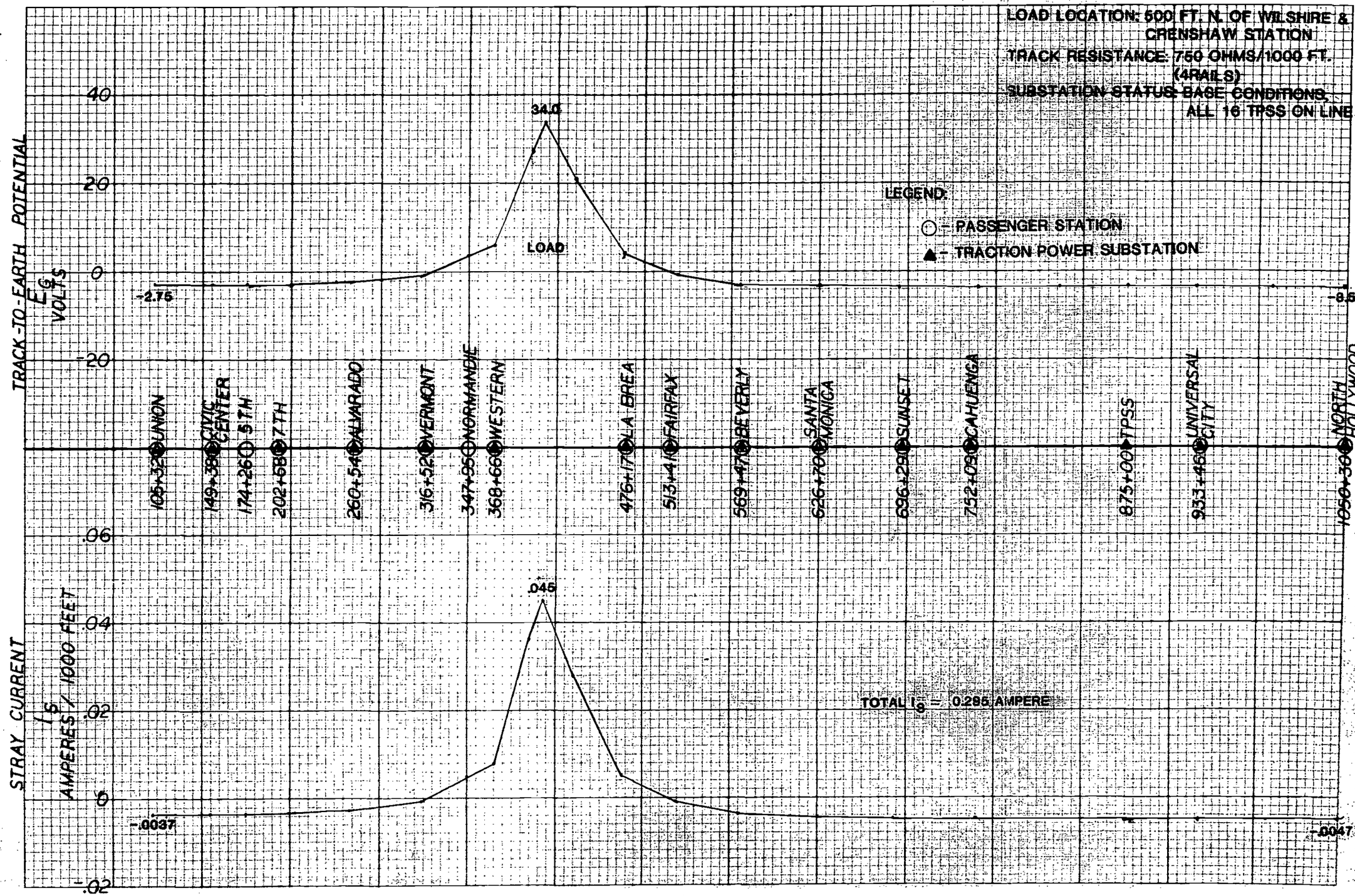

20PH-307 10X10 PER INCH
LITHO IN U.S.A.

TELEDYNE POST

PLATE B-6

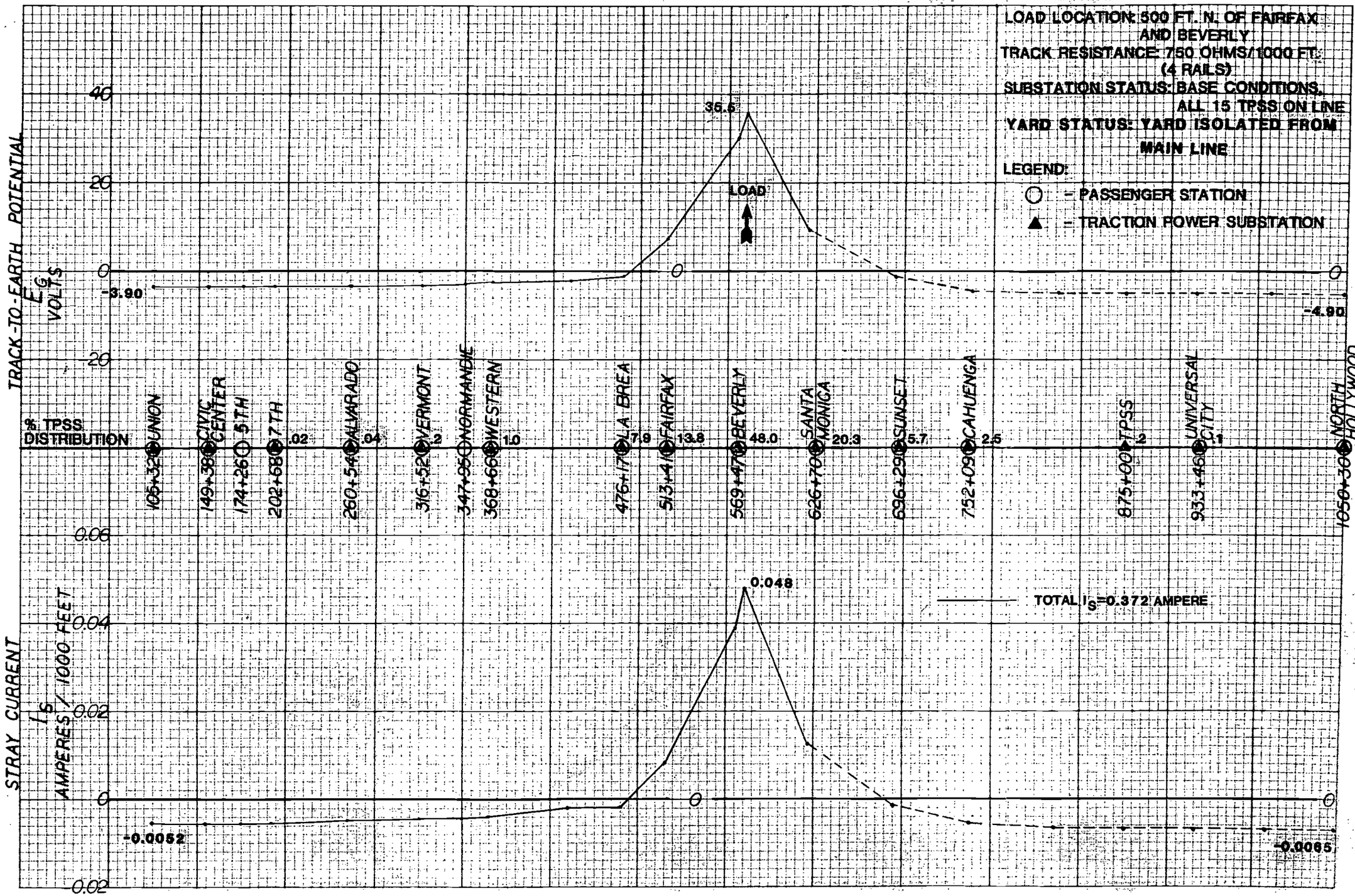

20FH-30J 10X10 PER INCH LITHO IN U.S.A.
TELEDYNE POST

PLATE B-7

LOAD LOCATION: 500 FT. S. OF N. HOLLYWOOD STATION
TRACK RESISTANCE: 750 OHMS / 1000 FT. (4 RAILS)
YARD STATUS: YARD ISOLATED FROM MAIN LINE
SUBSTATION STATUS: BASE CONDITIONS, ALL 15 TPSS ON LINE

LEGEND:
○ – PASSENGER STATION
▲ – TRACTION POWER SUBSTATION

TRACK-TO-EARTH POTENTIAL E_{TS} VOLTS

40
20
0
-20

-3.12

35.8
28.4
LOAD

STRAY CURRENT I_S AMPERES / 1000 FEET

.004
.002
0
-.002

-.0042

.048
.038

TOTAL I_S = 0.31 AMPERE

% TPSS DISTRIBUTION																								
	105+32	149+38	174+26	202+68	260+54	316+52	347+85	368+66	476+17	513+41	569+47		626+78		696+29	752+09		875+00		933+46		1050+30	83.1
	UNION	CIVIC CENTER	6TH	7TH	ALVARADO	VERMONT	NORMANDIE	WESTERN	LA BREA	FAIRFAX	BEVERLY	.01	SANTA MONICA	.03	SUNSET	CAHUENGA	6	TPSS	2.5	UNIVERSAL CITY	13.6	NORTH HOLLYWOOD	

ZOPH-30J 10X10 PER INCH
LITHO IN U.S.A.
TELEDYNE POST

PLATE B-8

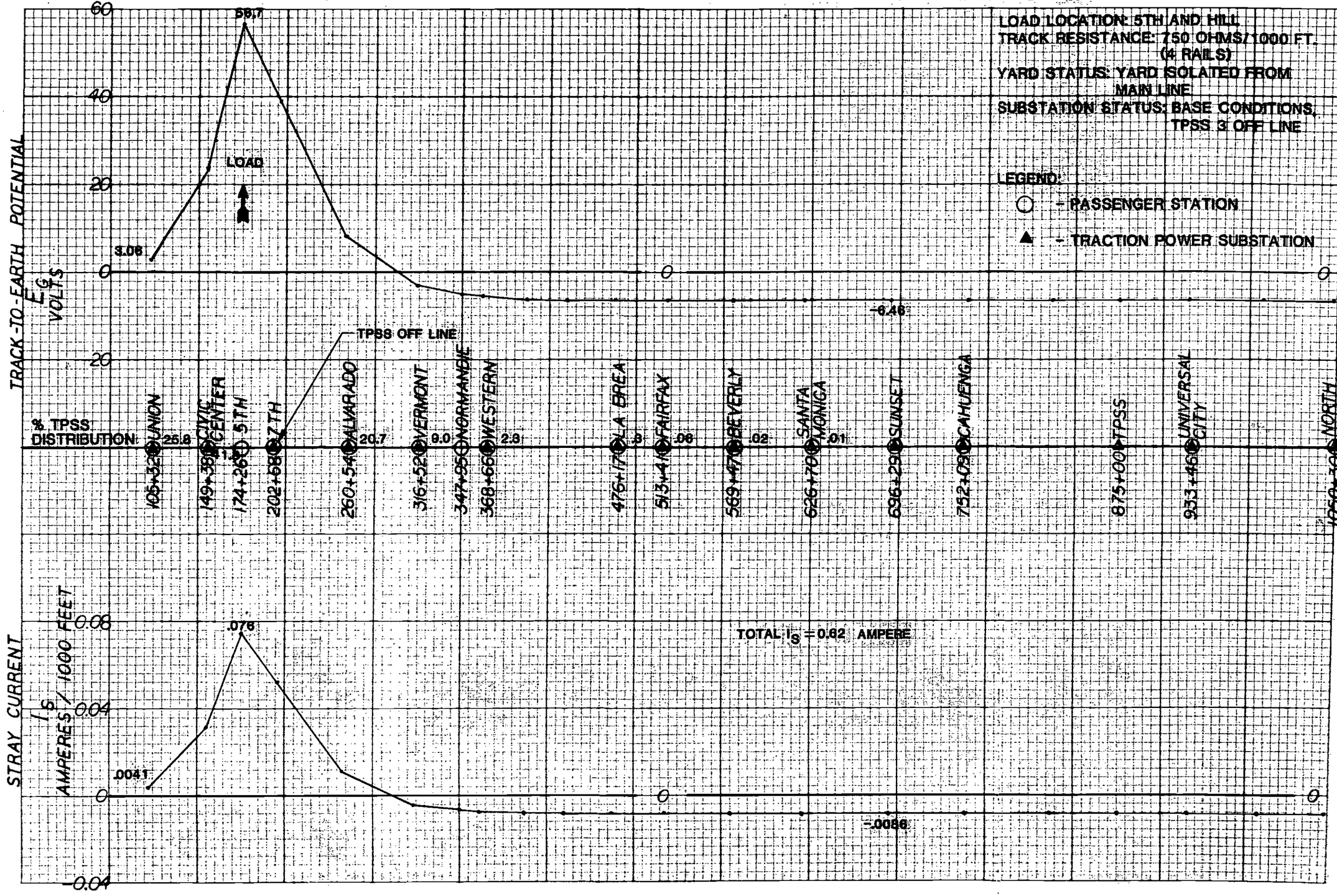

20M-30J 10X10 PER INCH
LITHO IN U.S.A.
TELEDYNE POST

PLATE B-9

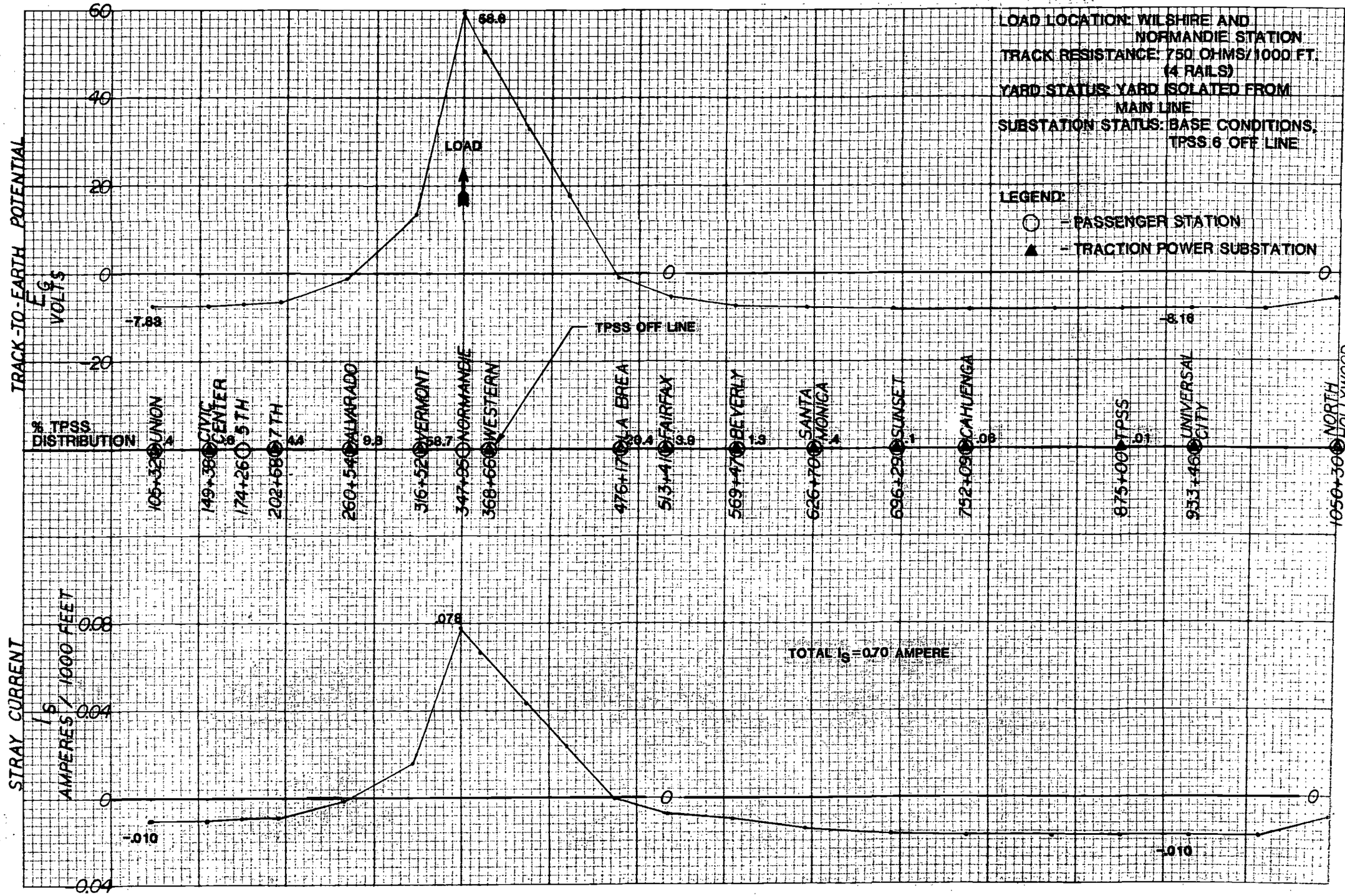

20FH-30J 10X10 PER INCH
LITHO IN U.S.A.

TELEDYNE POST

PLATE B-10

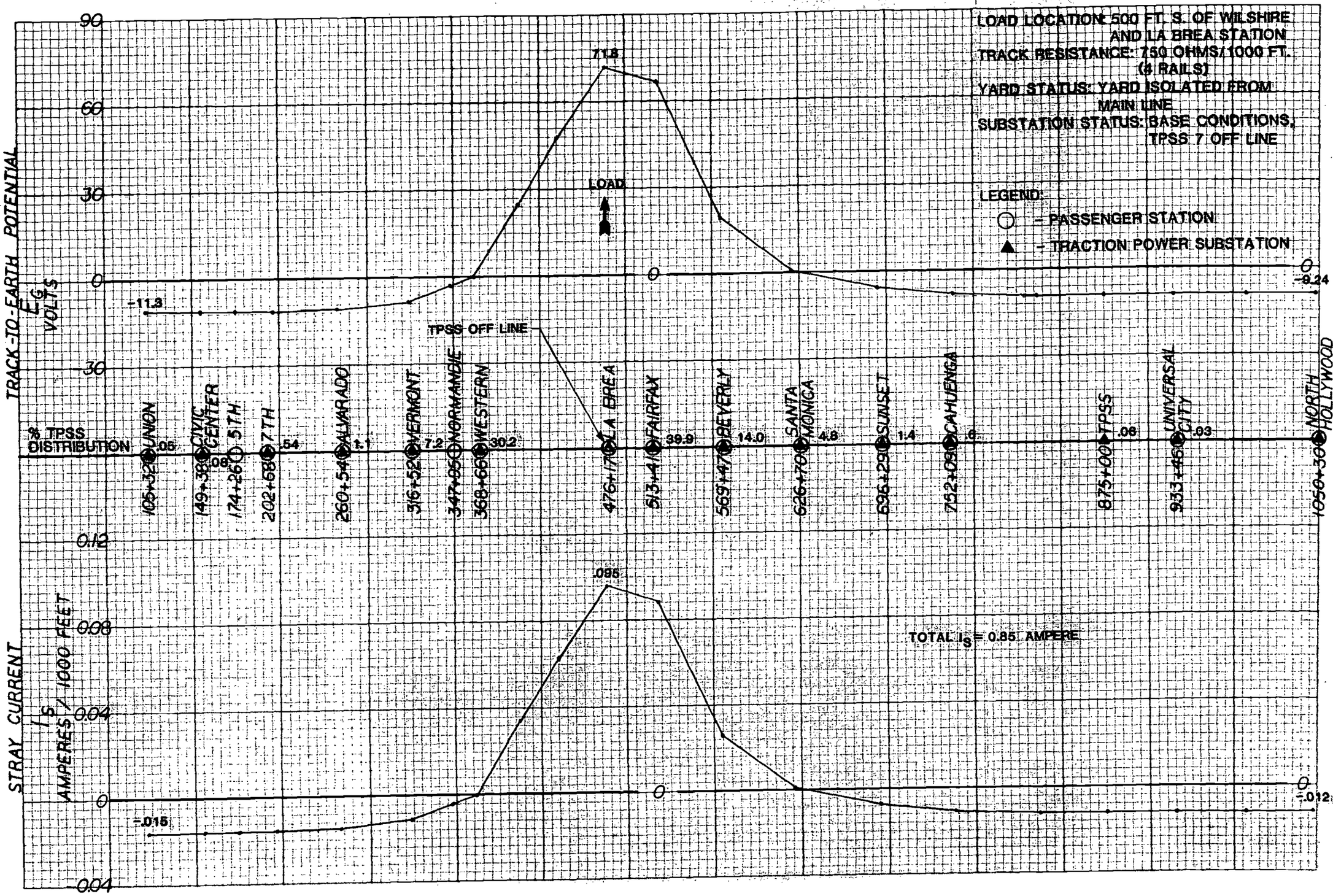

20PH-30J 10X10 PER INCH LITHO IN U.S.A.

TELEDYNE POST

PLATE B-11

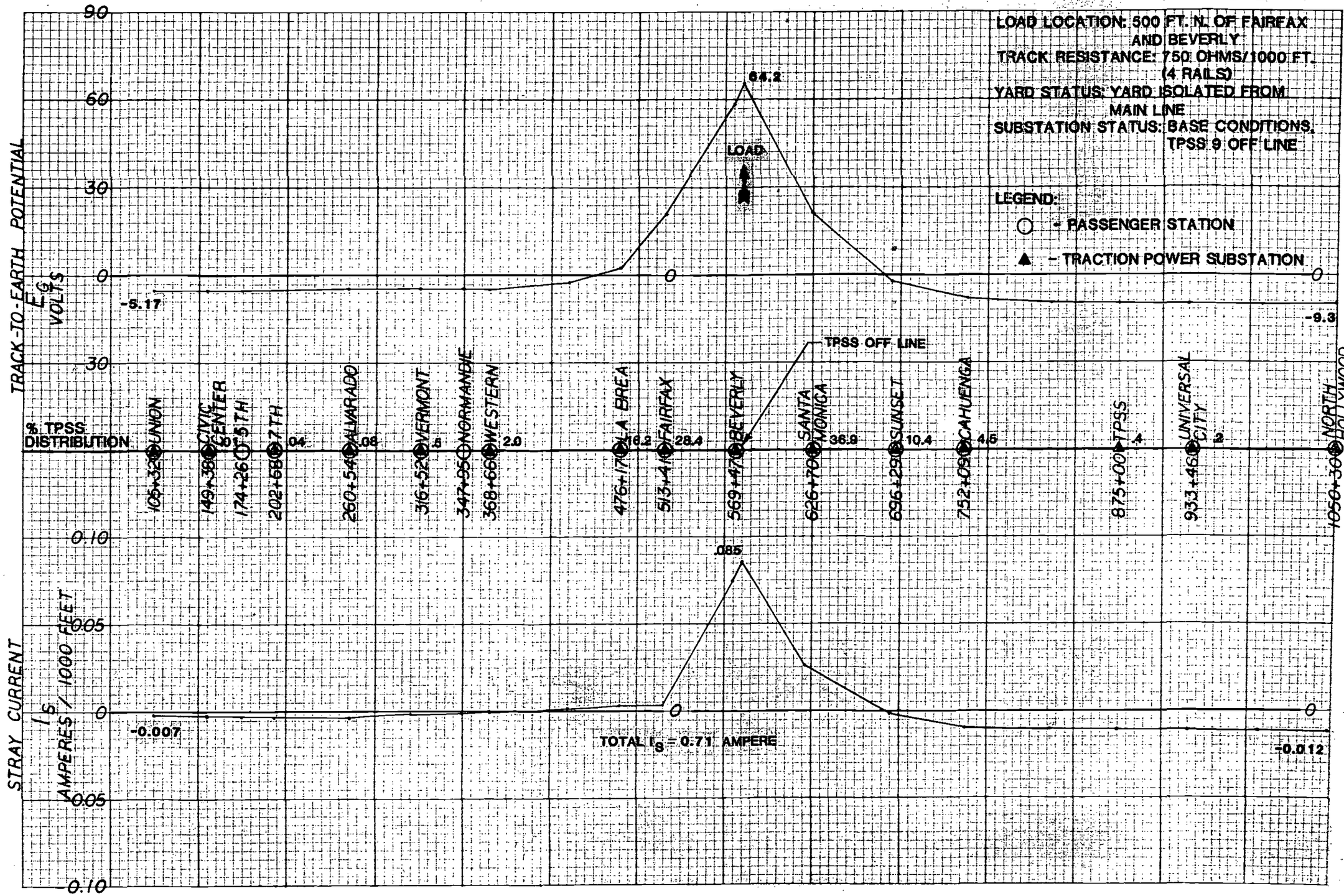

20FM-30J 10110 PER INCH
LITHO IN U.S.A.

TELEDYNE POST

PLATE B-12

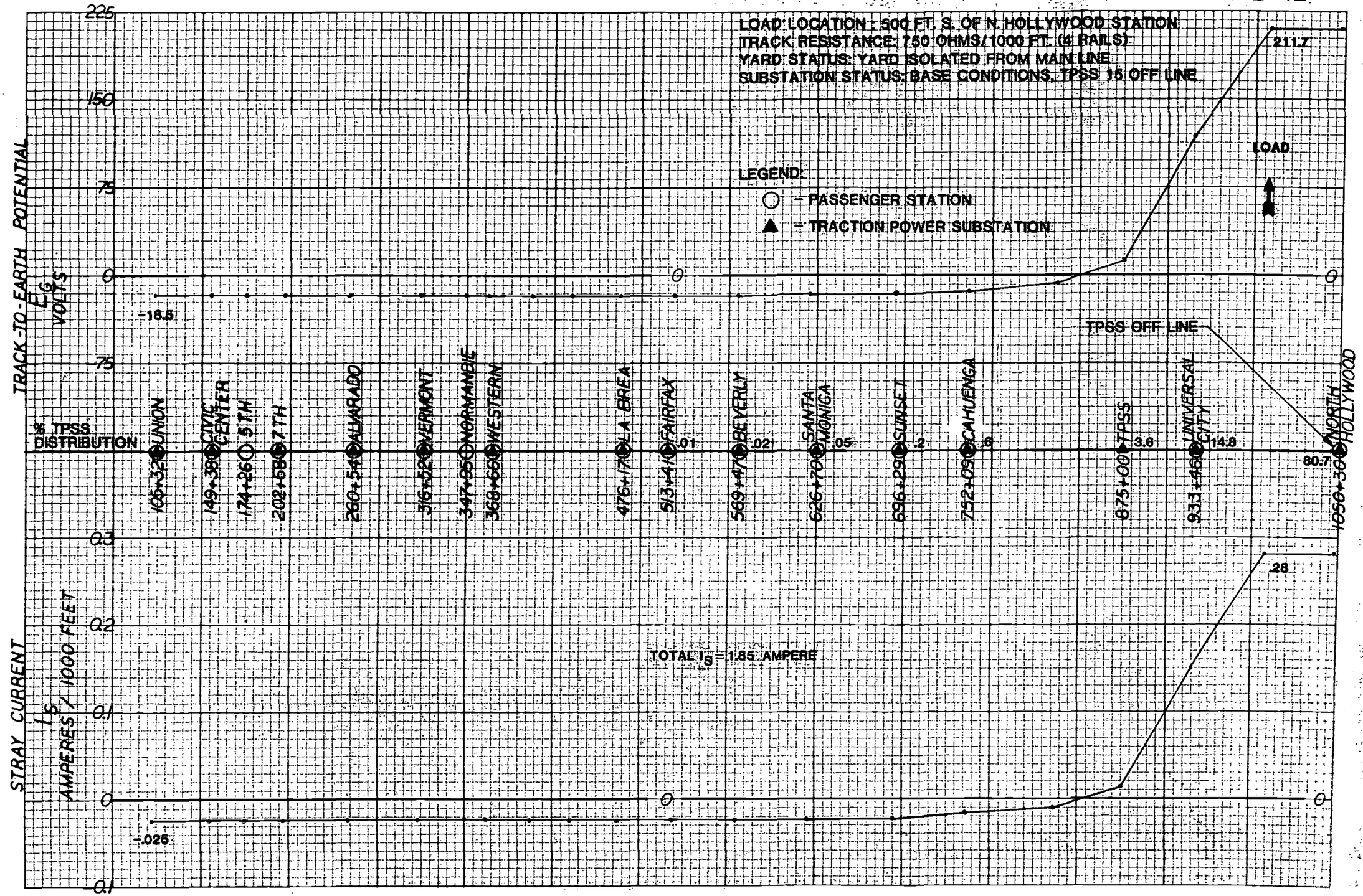

LOAD LOCATION : 500 FT. S. OF N. HOLLYWOOD STATION
TRACK RESISTANCE: 750 OHMS/1000 FT. (4 RAILS)
YARD STATUS: YARD ISOLATED FROM MAIN LINE
SUBSTATION STATUS: BASE CONDITIONS, TPSS 15 OFF LINE
LEGEND:
○ - PASSENGER STATION
▲ - TRACTION POWER SUBSTATION
LOAD
TPSS OFF LINE
TRACK-TO-EARTH POTENTIAL
E_G VOLTS
225
150
75
0
-75
-18.5
211.7
% TPSS DISTRIBUTION
105+32 UNION
149+38 CIVIC CENTER
174+26 5TH
202+68 7TH
260+54 ALVARADO
316+52 VERMONT
347+95 NORMANDIE
368+66 WESTERN
476+17 LA BREA
513+41 FAIRFAX
569+47 BEVERLY
626+70 SANTA MONICA
696+29 SUNSET
752+09 CAHUENGA
875+00 TPSS
933+46 UNIVERSAL CITY
1050+30 NORTH HOLLYWOOD
.01
.02
.05
.2
.6
3.6
14.8
80.7
STRAY CURRENT
I_S AMPERES / 1000 FEET
0.3
0.2
0.1
0
-0.1
-.025
.28
TOTAL I_S = 1.85 AMPERE

PLATE B-13

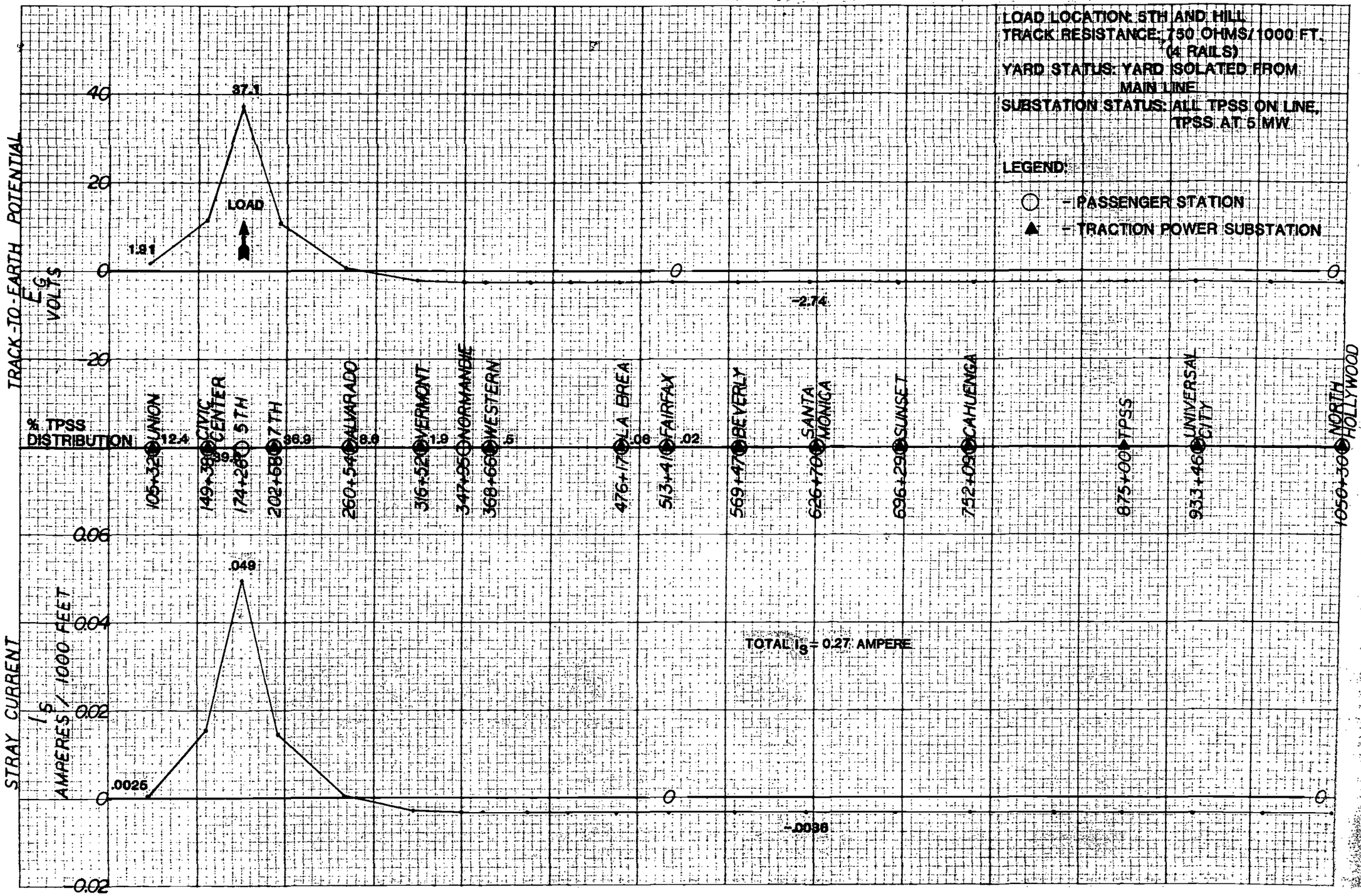

20PH-30J 10X10 PER INCH LITHO IN U.S.A.

TELEDYNE POST

PLATE B-14

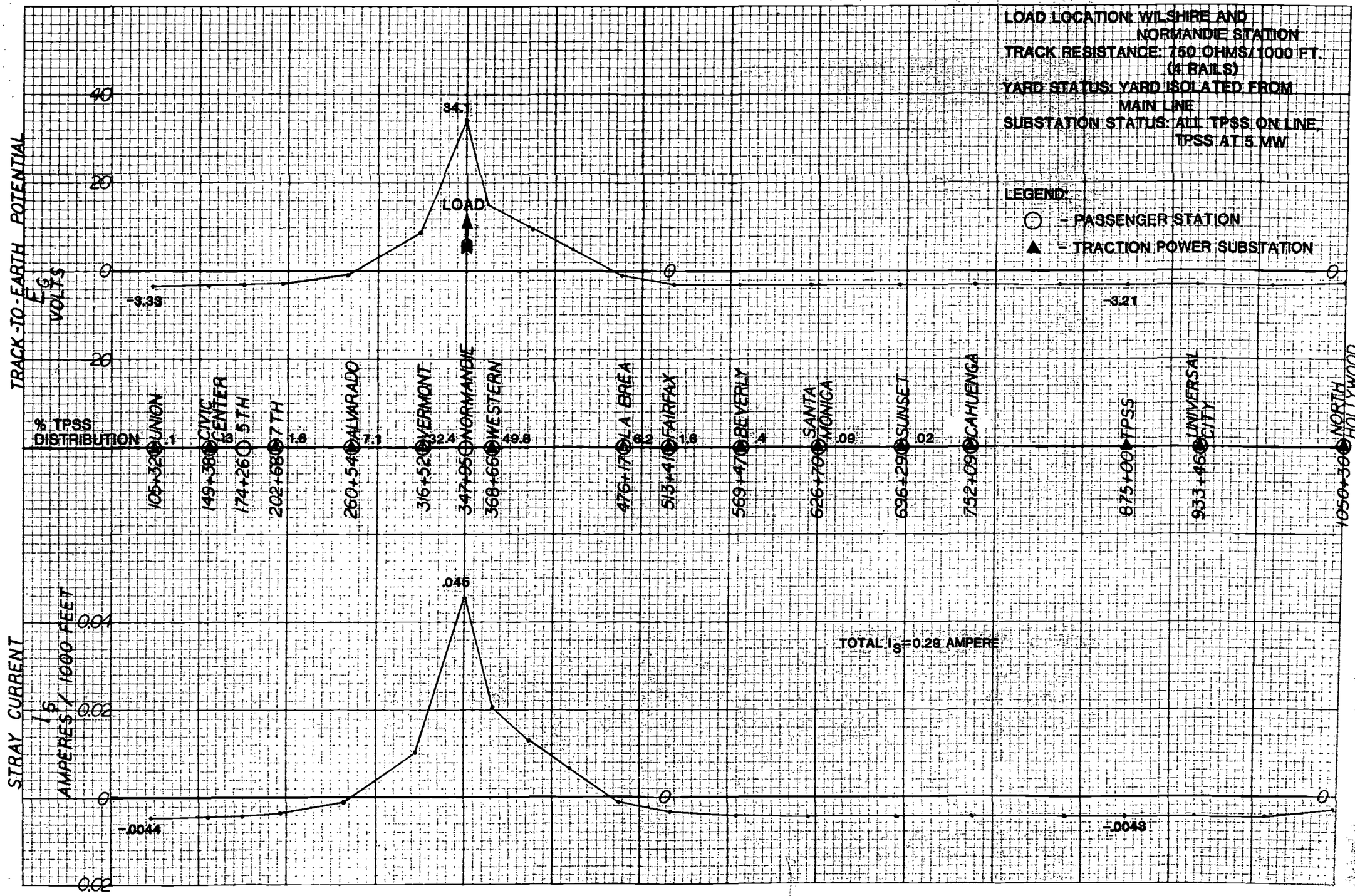

20PH-30J 10X10 PER INCH
LITHO IN U.S.A.

TELEDYNE POST

PLATE B-15

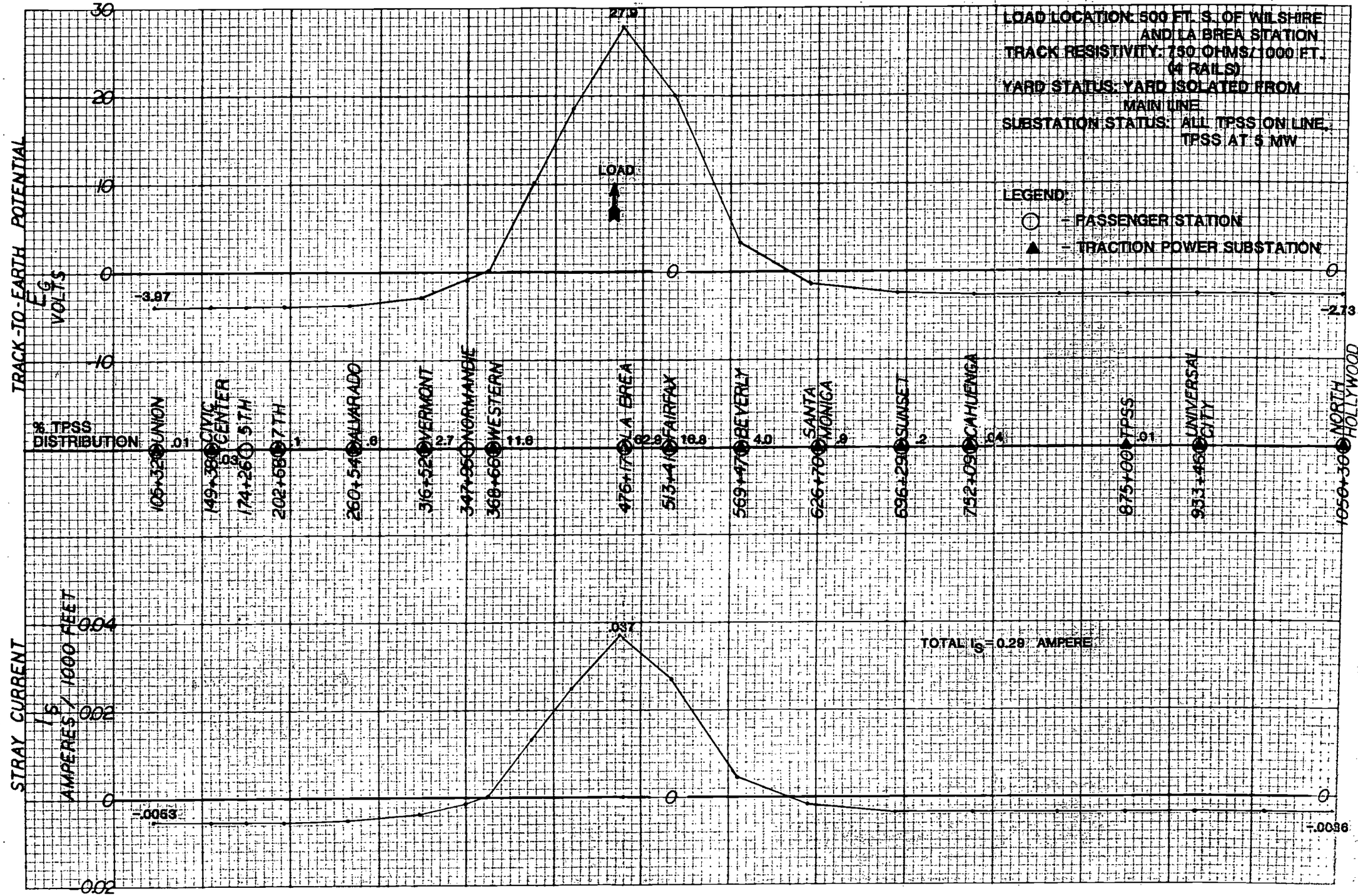

30FH-30J 10X10 PER INCH
LITHO IN U.S.A.
*TELEDYNE POST

PLATE B-16

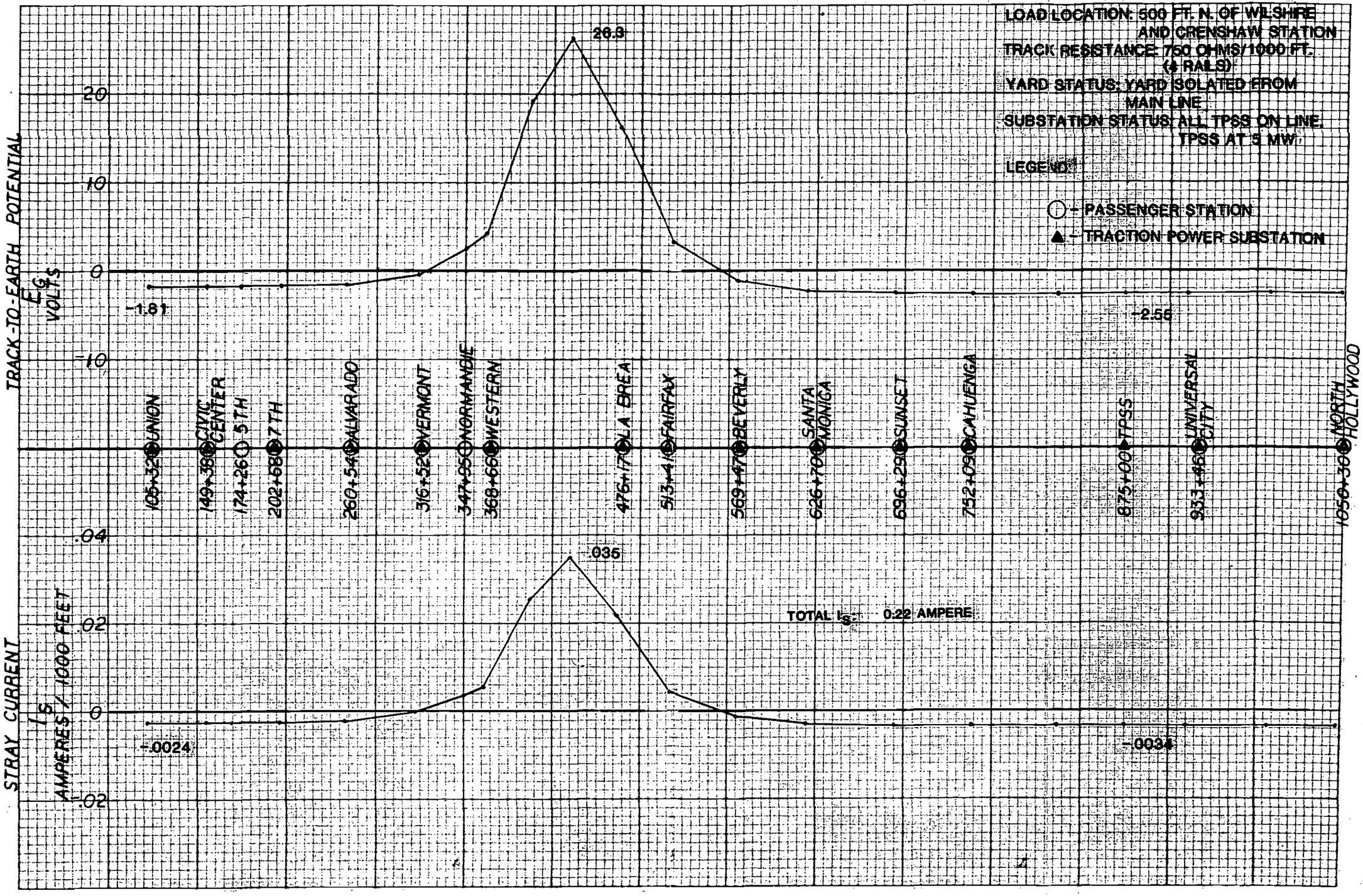

20PH-30J 10X10 PER INCH
LITHO IN U.S.A.

TELEDYNE POST

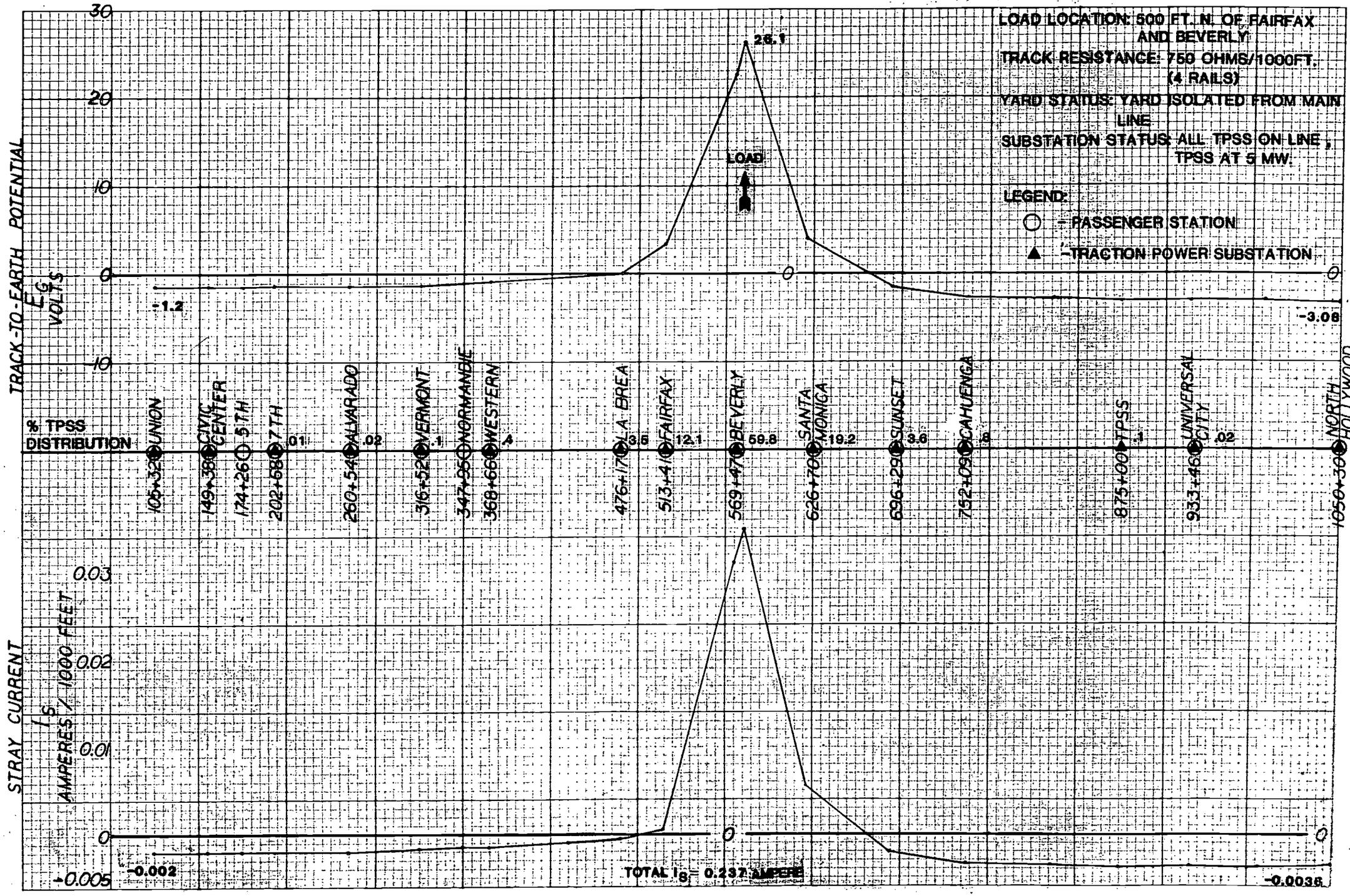

20FH-30J 10X10 PER INCH
LITHO IN U.S.A.
TELEDYNE POST

LOAD LOCATION: 500 FT. S. OF N. HOLLYWOOD STATION
TRACK RESISTANCE: 750 OHMS/1000 FT. (4 RAILS)
YARD STATUS: YARD ISOLATED FROM MAIN LINE
SUBSTATION STATUS: ALL TPSS ON LINE, TPSS AT 5 MW

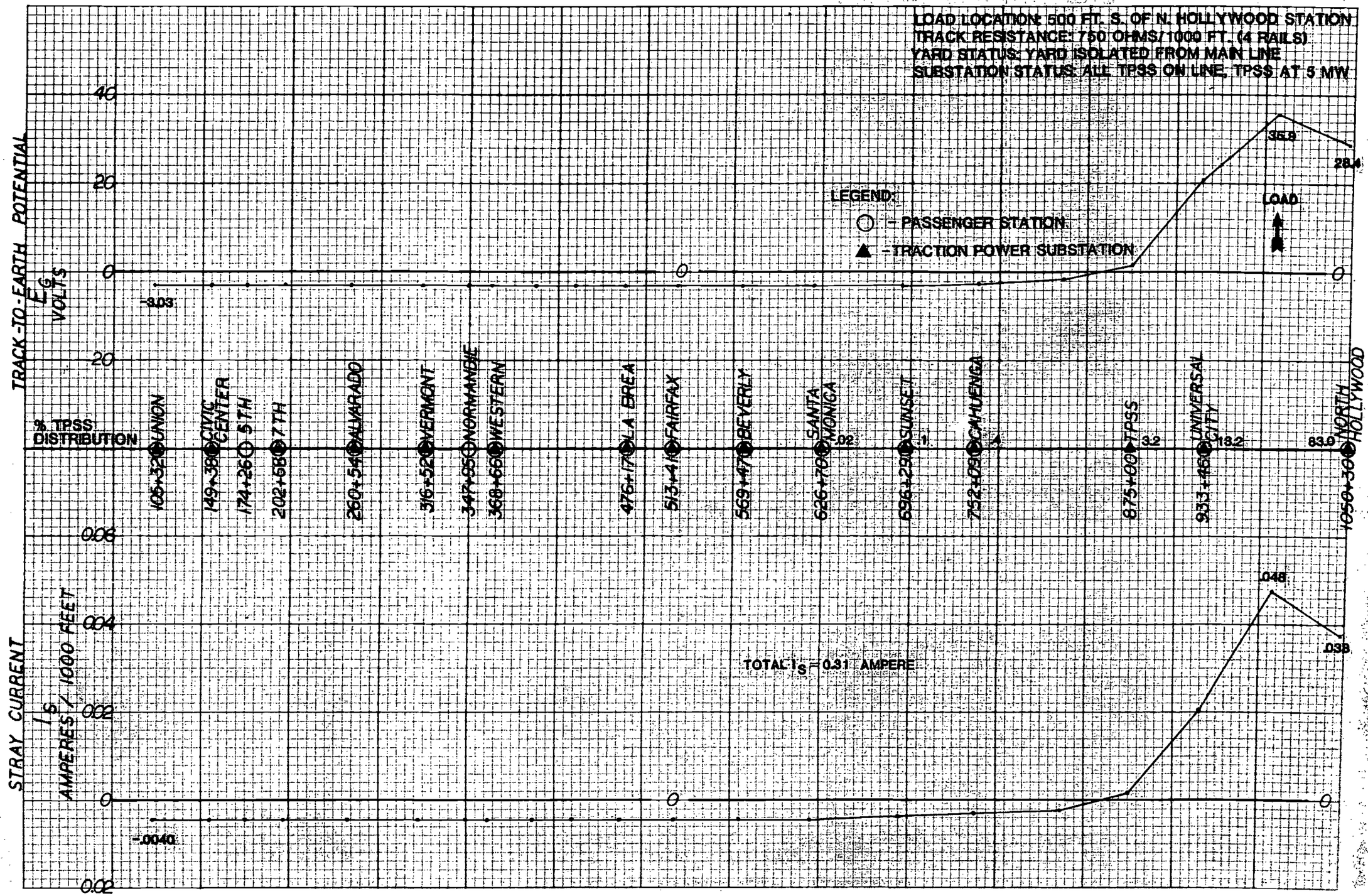

80PH-302 10X10 PER INCH
LITHO IN U.S.A.

TELEDYNE POST

PLATE B-19

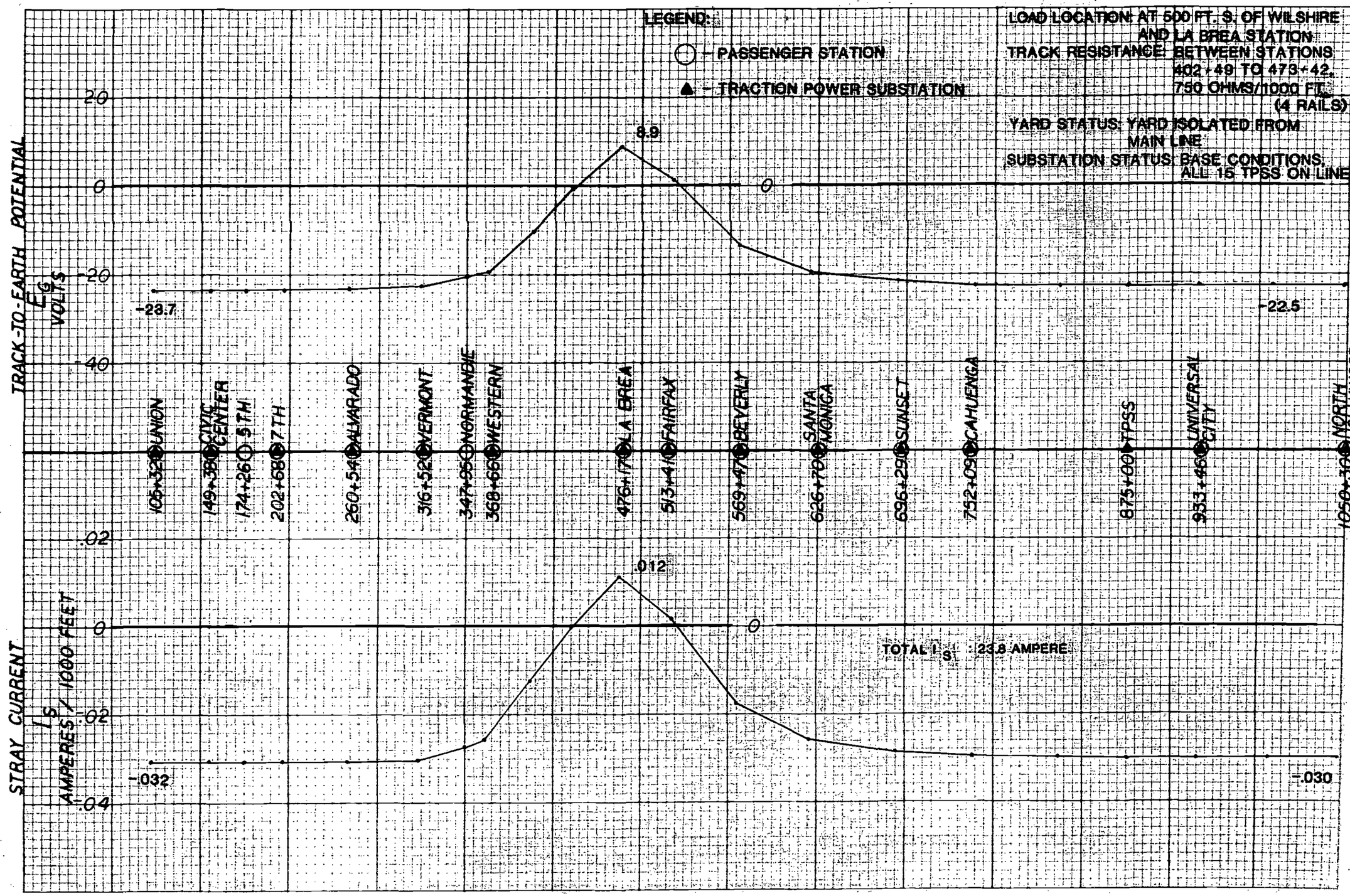
LEGEND:
○ - PASSENGER STATION
▲ - TRACTION POWER SUBSTATION
LOAD LOCATION: AT 500 FT. S. OF WILSHIRE AND LA BREA STATION
TRACK RESISTANCE: BETWEEN STATIONS 402+49 TO 473+42, 750 OHMS/1000 FT. (4 RAILS)
YARD STATUS: YARD ISOLATED FROM MAIN LINE
SUBSTATION STATUS: BASE CONDITIONS, ALL 15 TPSS ON LINE
TRACK-TO-EARTH POTENTIAL
E_G VOLTS
20
0
-20
-40
8.9
-23.7
-22.5
105+32 UNION
149+38 CIVIC CENTER
174+26 5TH
202+68 7TH
260+54 ALVARADO
316+52 VERMONT
347+95 NORMANDIE
368+66 WESTERN
476+17 LA BREA
513+41 FAIRFAX
569+47 BEVERLY
626+70 SANTA MONICA
696+29 SUNSET
752+09 CAHUENGA
875+00 TPSS
933+46 UNIVERSAL CITY
1050+30 NORTH HOLLYWOOD
STRAY CURRENT
I_S AMPERES / 1000 FEET
.02
0
-.02
-.04
.012
-.032
-.030
TOTAL I_S : 23.8 AMPERE

Appendix C

Effects of Stray Currents on Tunnel Construction

One of the two significant mechanisms for corrosive attack of steel reinforcement within concrete used for tunnel construction is stray current corrosion. As discussed in Appendix A, the tunnel reinforcing structure will act as a transfer point for stray current discharge and accumulation. There are two major aspects of stray current flow on tunnel construction that must be analyzed. These are as follows:

- the ability of the reinforced tunnel structure to control stray earth currents by reducing the magnitude of current discharged into the earth by keeping a portion of stray current from the rails on the tunnel structure

- the impact of any resultant loss of stray currents to earth on the corrosion of reinforcing steel within the concrete.

Analysis of the first aspect consisted of developing an electrical model of the tunnel structure and applying stray current flow to this model as determined by the results from Appendix B. Certain electrical characteristics of the tunnel structure were varied to determine current levels in the structure and current levels discharged from the structure. These current levels are then evaluated with regard to the second aspect of the problem to determine estimates of corrosion rates.

The circuit model developed to represent the tunnel structure is shown on Plate C-1. This circuit shows a distributed network consisting of longitudinal tunnel resistance (R_1) and tunnel to earth resistance (R_2). As mentioned in Appendix B, it is possible to model a distributed network using discrete lumped values provided the ratio R_2/R_1 is large. The range of values for R_2 and R_1 that can be expected for proposed tunnel construction requires that the maximum unit length allowable must be less than ten feet to maintain a large ratio for analysis purposes. The actual unit length chosen for the analysis was four feet to coincide with a precast concrete liner panel length of four feet. The circuit shown on Plate C-1 also shows current sources located at each earth point. These current sources represent the stray current flow from the rails for a unit length of four feet as determined by the analysis of Appendix B and as shown on the I_S graphs. The value of these currents will vary with distance along the transit system and can be represented by simple linear equations calculated from the I_S graphs.

The approach used to analyze the circuit shown on Plate C-1 consisted of an iterative solution for currents for each unit earth resistance and unit tunnel length taking into account the attenuation characteristics of the tunnel for the resistance network given. Referring to Plate C-1, the general form of the current equations are as follows:

$i_1 = b\ I_{S1}$

$i_2 = b\ (I_{S2} + (1-b)I_{S1})$

$i_3 = b\ (I_{S3} + (1-b)(I_{S2} + (1-b)I_{S1}))$

.

.

.

$i_N = b\ (I_{SN} + (1-b)(J_{N-1}))$ where J_{N-1} = current on tunnel at the N-1 unit.

where:

i_1 through i_N = current flow to earth from the tunnel structure at each unit of specified length (1 unit = 4 feet).

I_{S1} through I_{SN} = current discharge from the rails at the Nth unit along the system. Currents are expressed as

$I_S = mx + \alpha$ where x = distance (See Appendix B, I_S graphs.)

b = one minus the ratio of current flow on the tunnel to current flow off the tunnel taking into account the characteristic impedance for a set of R_1 and R_2 values.

The ratio defined by b above will remain essentially constant for a given set of R_1 and R_2 values provided there is sufficient length of system extending beyond each side of the area under study. More specifically, b was determined as follows:

$$b = 1 - \frac{R_2}{R_2 + R_G \coth \gamma\ x}$$

where R_2 = resistance to earth of unit length of tunnel

R_1 = longitudinal resistance of unit length of tunnel

$R_G = (R_1 R_2)^{\frac{1}{2}}$

$= (R_1/R_2)^{\frac{1}{2}}$

x = number of units (distance 1 unit = 4 feet)

The system of equations described thus far is subject to one major limitation. The results generated will be valid for unidirectional flow within the tunnel. In actuality, however, current flow will split in both directions along the tunnel, in addition to flow to earth. The basis for this result is the fact that the equations utilize only one half the current from the rails. In other words, the curves representing the rail current are doublesided and only one side of the curve is used. To circumvent this problem, it was necessary to solve the equations twice, once from each direction along the tunnel. The two sets of results were then summed and halved for earth currents, while the difference between longitudinal currents from each direction was obtained and then halved.

This general approach was used to analyze the distribution of both longitudinal and earth current flows along the tunnel in an area where the rails discharge current. The effect on the distribution caused by variations in earth resistance (R_2) and longitudinal resistance (R_1) was studied. The values chosen for R_2 and R_1 require some discussion. A base value for tunnel to earth resitance is necessary to establish what can be expected without coating. Tunnel geometry in conjunction with Dwight's formulae [1] for earth resistances of buried conductors shows that a resistance-to-earth of two to four ohms per foot of single tunnel can be expected in average soil resistivities of 2,000 to 4,000 ohm- centimeters. While the precise value is not important, the general order of magnitude is, and indicates that uncoated single tunnel will be less than ten ohms per foot in most soils. Insofar as longitudinal resistance is concerned, a base value of fifty microhms (50×10^{-6}) per foot of single tunnel was established. This value represents electrical continuity equivalent to approximately twelve one-half inch diameter (#4) steel reinforcing bars, which is feasible for invert construction and within the same order of magnitude as that anticipated for electrically continuous precast panels, although no specific information was available on this matter at the time of our analysis.

The analysis, based on the preceeding discussion, included the following considerations and input data.

- tunnel to earth resistance (R_2) per foot of twin tunnel was set at 20, 800, 1,600 and 6,400 ohms which represent increases of 20 to 6,400 times the base value to represent various degrees of coating quality

- tunnel longitudinal resistance (R_1) was set at 50 or 25 microhms per foot of twin tunnel

(1) Formulae for a buried ring and buried horizontal round plate were used, yielding essentially the same result.

- stray current levels were established with a load operating at Wilshire and La Brea with the TPSS at this location off-line resulting in the following approximate current equations:

$$I = 1.12387 \times 10^{-5} X + 0 \quad \text{for } 0 \leq X < 4401 \text{ (feet)}$$
$$I = 3.00392 \times 10^{-5} X + .0495 \quad \text{for } 4401 \leq X < 9736$$
$$I = -2.65477 \times 10^{-5} X + .2097 \quad \text{for } 9736 \leq X < 15901$$
$$I = -1.02238 \times 10^{-5} X + .0461 \quad \text{for } 15901 \leq X < 19956$$
$$I = -3.4293 \times 10^{-5} X + .0046 \quad \text{for } 19956 \leq X < 21296$$

- total area under study is 21,296 feet of twin tunnel separated into 5,324 four foot increments

It must be noted that the selection of specific stray current results is significant only because of the physical location of the load at the middle of the system, and not for any other reason. Results from the forthcoming analysis will be valid for other locations with different stray current levels provided the results are scaled up or down accordingly depending upon the level of stray currents. Choosing a load in the middle of the system results in an extensive length of tunnel either side of the discharge area under study which will keep variations in b, as defined previously, to less than .5%.

Table C-1 shows the results generated from solution of the current equations after 5,325 iterations. Positive current flow on the tunnel is to the north (to the right) for locations north of the load, while negative current flow on the tunnel is to the south (to the left) for locations south of the load. These results, and results generated for three other cases with different values of R_2 are shown graphically on Plates C-2 and C-3. Plate C-2 shows current flow to earth from the twin tunnel structure for each of the four different tunnel-to-earth per foot resistance levels plotted versus distance along the tunnel. Plate C-3 shows current flow on the twin tunnel structure for each of the four different earth resistances plotted versus distance. All currents were plotted as positive values on Plate C-3, however actual direction is such that positive flow is north (to the right) resulting in negative values for all currents south of the load (to the left). Review of the information on these Plates indicates the following basic results.

- Maximum current flow to earth from the tunnel structure will occur at the load, where current flow on the tunnel will be at a minimum.

- Current flow on the tunnel will be at its maximum absolute value at two locations either side of the load. These locations of maximum flow on the structure will change as tunnel-to-earth resistance varies.

Plate C-2 shows that at the 20 ohm per foot level for tunnel-to-earth resistance, virtually all stray current from the rails is discharged to earth through the tunnel (note the stray current from the rails is also shown on the graphs). As tunnel-to-earth resistance is increased, current flow to earth decreases. While this may appear to be beneficial at face value the level of tunnel earth resistance (i.e. coating quality) necessary to cause a significant reduction in earth currents becomes impossible to achieve from a practical standpoint. Plate C-4 illustrates this concept. This graph shows earth current from

the tunnel at the load as a percent of stray current from the rail ($\%I_S$) versus tunnel-to-earth resistance. As shown, tunnel-to-earth resistances greater than 1,000 ohms per foot are necessary to reduce earth current to 50% or less. Similar results can be obtained from review of Plate C-3 (current flow on tunnel), except now we must maximzie the current flow on the tunnel at the ends of the discharge area. Review of this plate shows that current flow remaining on the tunnel at the ends of the discharge increases as tunnel to earth resistance increases. Plate C-5 shows this relationship graphically as current flow on the tunnel at the end of the discharge area as a percent of total I_S ($\%I_S$) versus tunnel to earth resistance. As shown, tunnel to earth resistance in excess of 2,000 ohms per foot is necessary to keep 24% of total rail discharge on the tunnel structure.

The reason why the tunnel to earth resistances necessary for stray earth current reductions are impractical to achieve requires some explanation. As stated at the beginning of this discussion, a base value of two ohms per foot of twin tunnel can be expected in average soils neglecting external coating. The values of 20 to 6,400 ohms per foot used for this analysis represent various levels of earth resistance with protective coating applied to external surfaces of the tunnel. The relationship between these values and quality of coating is discussed and shown below in Table C-2. The earth resistance of the tunnel with an external coating is determined by the amount of bare area associated with coating defects. It is the resistance to earth of these coating defects (faults) that wll establish the tunnel-to-earth resistance characteristics. The resistance to earth of a single defect can be calculated using the following equation.

$$R = \frac{\rho}{2D} \quad \text{where}$$

R = resistance of tunnel (one foot of twin tunnel)
ρ = soil resistivity
D = diameter of coating fault

Solving this equation for D with ρ at 2,200 ohm-centimeters average and R at 20 ohms (per foot of twin tunnel) D will equal 55 centimeters. This yields a single coating fault with a bare area of 2,376 square centimeters or 2.6 square feet. The total surface area associated with one foot of twin tunnel is:

$$2 \times \pi \times D \times L = 2 \times \pi \times 18.5 \times 1 = 116 \text{ square feet}$$

This indicates that at the 20 ohm per foot level for earth resistance only 2.6 square feet out 116 square feet will be bare or 98% will be coated. This represents a high quality coating application. Practical considerations indicate that numerous smaller coating defects will occur as opposed to a single large defect. If the total bare area as calculated above is distributed over several smaller defects the per foot earth resistance will decrease which will reduce further the ability of

the tunnel to control stray currents. This analysis is summarized in Table C-2 for the various levels of earth resistance used. The percent bare area and percent coated area for a single fault are shown for a particular earth resistance.

TABLE C-2

Tunnel To Earth Resistance	% Bare Area At A Single Fault	% Tunnel Area Coated
20 Ω/ft.	2.00000%	98.0000%
800 Ω/ft.	.00140%	99.9986%
1,600 Ω/ft.	.00034%	99.9996%
6,400 Ω/ft.	.00002%	99.9999%

It is obvious from these results that exceptionally high coating quality must be achieved if there is to be any significant reduction in earth current from the tunnel. It is our experience that the levels of coating quality necessary to establish any real benefit cannot be obtained given practical field considerations.

At this point, it is necessary to review anticipated corrosion rates for the various conditions studied. Combining the results from Plate C-2, current flow off the tunnel to earth, and the results shown in Table C-2, current density can be determined. Current density and corrosion rates are directly proportional, hence the relationship between stray currents and tunnel resistance (coating quality) can be demonstrated. Current density is calculated by taking maximum earth current from the tunnel divided by the total bare area available. Inherent in this approach is the fact that for a given earth resistance and current, numerous small coating defects will result in higher corrosion rates than a single or several larger defects. Probable current densities based on the results from Plate C-2 at the maximum current loss point (i.e. the load) are summarized in Table C-3 for different values of tunnel to earth resistance. The results in Table C-2 and the overall analysis show the following.

- Increasing tunnel to earth resistance a factor of 320 (from 20 to 6,400 ohms per foot) will reduce earth current 32% but will increase resulting corrosion rates in the tunnel reinforcing by five orders of magnitude.

- Stray earth current cannot be practically controlled by increasing tunnel-to-earth resistances or longitudinal tunnel conductance.

- Anticipated concentrated corrosion rates for the reinforcing steel within the tunnel liners will increase as coating quality increases, hence stray current corrosion of the tunnel structure must be controlled by reducing stray current levels at the source.

TABLE C-3

Anticipated Current Densities

Tunnel to Earth Resistance[1] (ohms per foot)	Maximum Current loss amperes	Single Fault		Two Faults		Four Faults	
		Area (cm^2)	Current Density (μ amp/cm^2)	Area (cm^2)	Current Density (μ amp/cm^2)	Area (cm^2)	Current Density (μ amp/cm^2)
20	7.6×10^{-4}	2376	.32	594	1.3	149	5.1
800	4.8×10^{-4}	1.5	320	.37	1300	.093	5161
1600	3.8×10^{-4}	.37	1027	.093	4086	.023	16.522
6400	2.4×10^{-4}	.023	10,344	.006	65,513	.0015	162,050

1 Earth resistance remains constant causing a decrease in bare area as number of faults increases.

Table C-1

RATIO OF I'ON' TO I'OFF' = 153.114
CHARACTERISTIC IMPEDANCE .0316228 OHMS
PROPAGATION CONSTANT 6.32455E-03
PERCENT OF I'TOTAL' ON TUNNEL = 99.3715 %
PERCENT OF I'TOTAL' OFF TUNNEL = .628477 %
TOTAL LONGITUDINAL LENGTH OF SYSTEM USED IN CALCULATION OF ABOVE PARAMETERS = 26548 FEET

TOTAL LONGITUDINAL LENGTH OF SYSTEM UNDER STUDY = 21296 FEET

ZONE # 1 BEGINS AT 0 FEET AND ENDS AT 4401 FEET CURRENT EQUATION IS I= 1.12387E-05 X + 0
ZONE # 2 BEGINS AT 4401 FEET AND ENDS AT 9736 FEET CURRENT EQUATION IS I= 3.00392E-05 X + .0495
ZONE # 3 BEGINS AT 9736 FEET AND ENDS AT 15901 FEET CURRENT EQUATION IS I=-2.65477E-05 X + .2097
ZONE # 4 BEGINS AT 15901 FEET AND ENDS AT 19956 FEET CURRENT EQUATION IS I=-1.02238E-05 X + .0461
ZONE # 5 BEGINS AT 19956 FEET AND ENDS AT 21296 FEET CURRENT EQUATION IS I=-3.4293E-06 X + 4.6E-03

TOTAL CURRENT TO EARTH LEFT-RIGHT = 1.69298 AMPERES
TOTAL CURRENT TO EARTH RIGHT TO LEFT = 1.69018 AMPERES
TOTAL CURRENT INTO SYSTEM LEFT TO RIGHT = 1.69468 AMPERES
TOTAL CURRENT INTO SYSTEM RIGHT TO LEFT = 1.69468 AMPERES

CURRENT-TO-EARTH AT 0FEET	= 1.42393E-05 AMPERES	CURRENT ON TUNNEL AT 2FEET	= -2.60603E-03 AMPERES
CURRENT-TO-EARTH AT 100FEET	= 1.66657E-05 AMPERES	CURRENT ON TUNNEL AT 102FEET	= -2.92454E-03 AMPERES
CURRENT-TO-EARTH AT 200FEET	= 1.93951E-05 AMPERES	CURRENT ON TUNNEL AT 202FEET	= -3.21544E-03 AMPERES
CURRENT-TO-EARTH AT 300FEET	= 2.23835E-05 AMPERES	CURRENT ON TUNNEL AT 302FEET	= -3.4555E-03 AMPERES
CURRENT-TO-EARTH AT 400FEET	= 2.55934E-05 AMPERES	CURRENT ON TUNNEL AT 402FEET	= -3.66185E-03 AMPERES
CURRENT-TO-EARTH AT 500FEET	= 2.89928E-05 AMPERES	CURRENT ON TUNNEL AT 502FEET	= -3.83681E-03 AMPERES
CURRENT-TO-EARTH AT 600FEET	= 3.25543E-05 AMPERES	CURRENT ON TUNNEL AT 602FEET	= -3.98761E-03 AMPERES
CURRENT-TO-EARTH AT 700FEET	= 3.62548E-05 AMPERES	CURRENT ON TUNNEL AT 702FEET	= -4.11655E-03 AMPERES
CURRENT-TO-EARTH AT 800FEET	= 4.00745E-05 AMPERES	CURRENT ON TUNNEL AT 802FEET	= -4.22752E-03 AMPERES
CURRENT-TO-EARTH AT 900FEET	= 4.39964E-05 AMPERES	CURRENT ON TUNNEL AT 902FEET	= -4.32206E-03 AMPERES
CURRENT-TO-EARTH AT 1000FEET	= 4.80065E-05 AMPERES	CURRENT ON TUNNEL AT 1002FEET	= -4.40534E-03 AMPERES
CURRENT-TO-EARTH AT 1100FEET	= 5.20924E-05 AMPERES	CURRENT ON TUNNEL AT 1102FEET	= -4.47689E-03 AMPERES
CURRENT-TO-EARTH AT 1200FEET	= 5.62442E-05 AMPERES	CURRENT ON TUNNEL AT 1202FEET	= -4.53874E-03 AMPERES
CURRENT-TO-EARTH AT 1300FEET	= 6.04522E-05 AMPERES	CURRENT ON TUNNEL AT 1302FEET	= -4.59316E-03 AMPERES
CURRENT-TO-EARTH AT 1400FEET	= 6.47122E-05 AMPERES	CURRENT ON TUNNEL AT 1402FEET	= -4.64108E-03 AMPERES
CURRENT-TO-EARTH AT 1500FEET	= 6.90155E-05 AMPERES	CURRENT ON TUNNEL AT 1502FEET	= -4.6838E-03 AMPERES
CURRENT-TO-EARTH AT 1600FEET	= 7.33581E-05 AMPERES	CURRENT ON TUNNEL AT 1602FEET	= -4.72244E-03 AMPERES
CURRENT-TO-EARTH AT 1700FEET	= 7.77363E-05 AMPERES	CURRENT ON TUNNEL AT 1702FEET	= -4.75779E-03 AMPERES
CURRENT-TO-EARTH AT 1800FEET	= 8.21473E-05 AMPERES	CURRENT ON TUNNEL AT 1802FEET	= -4.79115E-03 AMPERES
CURRENT-TO-EARTH AT 1900FEET	= 8.65889E-05 AMPERES	CURRENT ON TUNNEL AT 1902FEET	= -4.8226E-03 AMPERES
CURRENT-TO-EARTH AT 2000FEET	= 9.10595E-05 AMPERES	CURRENT ON TUNNEL AT 2002FEET	= -4.85375E-03 AMPERES
CURRENT-TO-EARTH AT 2100FEET	= 9.55583E-05 AMPERES	CURRENT ON TUNNEL AT 2102FEET	= -4.88483E-03 AMPERES
CURRENT-TO-EARTH AT 2200FEET	= 1.00087E-04 AMPERES	CURRENT ON TUNNEL AT 2202FEET	= -4.91695E-03 AMPERES
CURRENT-TO-EARTH AT 2300FEET	= 1.04644E-04 AMPERES	CURRENT ON TUNNEL AT 2302FEET	= -4.95059E-03 AMPERES
CURRENT-TO-EARTH AT 2400FEET	= 1.09233E-04 AMPERES	CURRENT ON TUNNEL AT 2402FEET	= -4.98664E-03 AMPERES
CURRENT-TO-EARTH AT 2500FEET	= 1.13855E-04 AMPERES	CURRENT ON TUNNEL AT 2502FEET	= -5.02643E-03 AMPERES
CURRENT-TO-EARTH AT 2600FEET	= 1.18514E-04 AMPERES	CURRENT ON TUNNEL AT 2602FEET	= -5.07026E-03 AMPERES
CURRENT-TO-EARTH AT 2700FEET	= 1.23213E-04 AMPERES	CURRENT ON TUNNEL AT 2702FEET	= -5.11989E-03 AMPERES
CURRENT-TO-EARTH AT 2800FEET	= 1.27958E-04 AMPERES	CURRENT ON TUNNEL AT 2802FEET	= -5.17607E-03 AMPERES
CURRENT-TO-EARTH AT 2900FEET	= 1.32755E-04 AMPERES	CURRENT ON TUNNEL AT 2902FEET	= -5.24032E-03 AMPERES
CURRENT-TO-EARTH AT 3000FEET	= 1.37611E-04 AMPERES	CURRENT ON TUNNEL AT 3002FEET	= -5.31467E-03 AMPERES
CURRENT-TO-EARTH AT 3100FEET	= 1.42535E-04 AMPERES	CURRENT ON TUNNEL AT 3102FEET	= -5.40026E-03 AMPERES
CURRENT-TO-EARTH AT 3200FEET	= 1.47539E-04 AMPERES	CURRENT ON TUNNEL AT 3202FEET	= -5.49991E-03 AMPERES
CURRENT-TO-EARTH AT 3300FEET	= 1.52634E-04 AMPERES	CURRENT ON TUNNEL AT 3302FEET	= -5.61513E-03 AMPERES
CURRENT-TO-EARTH AT 3400FEET	= 1.57836E-04 AMPERES	CURRENT ON TUNNEL AT 3402FEET	= -5.74983E-03 AMPERES
CURRENT-TO-EARTH AT 3500FEET	= 1.63162E-04 AMPERES	CURRENT ON TUNNEL AT 3502FEET	= -5.9069E-03 AMPERES
CURRENT-TO-EARTH AT 3600FEET	= 1.68633E-04 AMPERES	CURRENT ON TUNNEL AT 3602FEET	= -6.09023E-03 AMPERES

Table C-1 (continued)

CURRENT-TO-EARTH AT 3700FEET = 1.74273E-04 AMPERES	CURRENT ON TUNNEL AT 3702FEET = -6.3047E-03 AMPERES
CURRENT-TO-EARTH AT 3800FEET = 1.8011E-04 AMPERES	CURRENT ON TUNNEL AT 3802FEET = -6.55513E-03 AMPERES
CURRENT-TO-EARTH AT 3900FEET = 1.86179E-04 AMPERES	CURRENT ON TUNNEL AT 3902FEET = -6.34822E-03 AMPERES
CURRENT-TO-EARTH AT 4000FEET = 1.92519E-04 AMPERES	CURRENT ON TUNNEL AT 4002FEET = -7.19866E-03 AMPERES
CURRENT-TO-EARTH AT 4100FEET = 1.99173E-04 AMPERES	CURRENT ON TUNNEL AT 4102FEET = -7.59172E-03 AMPERES
CURRENT-TO-EARTH AT 4200FEET = 2.06198E-04 AMPERES	CURRENT ON TUNNEL AT 4202FEET = -8.06111E-03 AMPERES
CURRENT-TO-EARTH AT 4300FEET = 2.13656E-04 AMPERES	CURRENT ON TUNNEL AT 4302FEET = -8.61017E-03 AMPERES
CURRENT-TO-EARTH AT 4400FEET = 2.2162E-04 AMPERES	CURRENT ON TUNNEL AT 4402FEET = -9.20478E-03 AMPERES
CURRENT-TO-EARTH AT 4500FEET = 2.30169E-04 AMPERES	CURRENT ON TUNNEL AT 4502FEET = -9.75206E-03 AMPERES
CURRENT-TO-EARTH AT 4600FEET = 2.39223E-04 AMPERES	CURRENT ON TUNNEL AT 4602FEET = -.0102192 AMPERES
CURRENT-TO-EARTH AT 4700FEET = 2.48787E-04 AMPERES	CURRENT ON TUNNEL AT 4702FEET = -.0106182 AMPERES
CURRENT-TO-EARTH AT 4800FEET = 2.5856E-04 AMPERES	CURRENT ON TUNNEL AT 4802FEET = -.0109588 AMPERES
CURRENT-TO-EARTH AT 4900FEET = 2.68726E-04 AMPERES	CURRENT ON TUNNEL AT 4902FEET = -.0112493 AMPERES
CURRENT-TO-EARTH AT 5000FEET = 2.79161E-04 AMPERES	CURRENT ON TUNNEL AT 5002FEET = -.0114976 AMPERES
CURRENT-TO-EARTH AT 5100FEET = 2.89824E-04 AMPERES	CURRENT ON TUNNEL AT 5102FEET = -.0117089 AMPERES
CURRENT-TO-EARTH AT 5200FEET = 3.00622E-04 AMPERES	CURRENT ON TUNNEL AT 5202FEET = -.0118889 AMPERES
CURRENT-TO-EARTH AT 5300FEET = 3.11707E-04 AMPERES	CURRENT ON TUNNEL AT 5302FEET = -.0120426 AMPERES
CURRENT-TO-EARTH AT 5400FEET = 3.22873E-04 AMPERES	CURRENT ON TUNNEL AT 5402FEET = -.0121731 AMPERES
CURRENT-TO-EARTH AT 5500FEET = 3.34159E-04 AMPERES	CURRENT ON TUNNEL AT 5502FEET = -.0122841 AMPERES
CURRENT-TO-EARTH AT 5600FEET = 3.45547E-04 AMPERES	CURRENT ON TUNNEL AT 5602FEET = -.0123778 AMPERES
CURRENT-TO-EARTH AT 5700FEET = 3.57022E-04 AMPERES	CURRENT ON TUNNEL AT 5702FEET = -.0124572 AMPERES
CURRENT-TO-EARTH AT 5800FEET = 3.68571E-04 AMPERES	CURRENT ON TUNNEL AT 5802FEET = -.0125235 AMPERES
CURRENT-TO-EARTH AT 5900FEET = 3.8019E-04 AMPERES	CURRENT ON TUNNEL AT 5902FEET = -.0125798 AMPERES
CURRENT-TO-EARTH AT 6000FEET = 3.91841E-04 AMPERES	CURRENT ON TUNNEL AT 6002FEET = -.0126261 AMPERES
CURRENT-TO-EARTH AT 6100FEET = 4.03545E-04 AMPERES	CURRENT ON TUNNEL AT 6102FEET = -.0126636 AMPERES
CURRENT-TO-EARTH AT 6200FEET = 4.15283E-04 AMPERES	CURRENT ON TUNNEL AT 6202FEET = -.0126935 AMPERES
CURRENT-TO-EARTH AT 6300FEET = 4.27049E-04 AMPERES	CURRENT ON TUNNEL AT 6302FEET = -.0127169 AMPERES
CURRENT-TO-EARTH AT 6400FEET = 4.38837E-04 AMPERES	CURRENT ON TUNNEL AT 6402FEET = -.0127344 AMPERES
CURRENT-TO-EARTH AT 6500FEET = 4.50641E-04 AMPERES	CURRENT ON TUNNEL AT 6502FEET = -.0127463 AMPERES
CURRENT-TO-EARTH AT 6600FEET = 4.62456E-04 AMPERES	CURRENT ON TUNNEL AT 6602FEET = -.0127523 AMPERES
CURRENT-TO-EARTH AT 6700FEET = 4.74276E-04 AMPERES	CURRENT ON TUNNEL AT 6702FEET = -.0127532 AMPERES
CURRENT-TO-EARTH AT 6800FEET = 4.86097E-04 AMPERES	CURRENT ON TUNNEL AT 6802FEET = -.012749 AMPERES
CURRENT-TO-EARTH AT 6900FEET = 4.97914E-04 AMPERES	CURRENT ON TUNNEL AT 6902FEET = -.0127394 AMPERES
CURRENT-TO-EARTH AT 7000FEET = 5.09723E-04 AMPERES	CURRENT ON TUNNEL AT 7002FEET = -.0127241 AMPERES
CURRENT-TO-EARTH AT 7100FEET = 5.21517E-04 AMPERES	CURRENT ON TUNNEL AT 7102FEET = -.0127028 AMPERES
CURRENT-TO-EARTH AT 7200FEET = 5.33293E-04 AMPERES	CURRENT ON TUNNEL AT 7202FEET = -.0126749 AMPERES
CURRENT-TO-EARTH AT 7300FEET = 5.4504E-04 AMPERES	CURRENT ON TUNNEL AT 7302FEET = -.0126399 AMPERES
CURRENT-TO-EARTH AT 7400FEET = 5.56757E-04 AMPERES	CURRENT ON TUNNEL AT 7402FEET = -.0125971 AMPERES
CURRENT-TO-EARTH AT 7500FEET = 5.68434E-04 AMPERES	CURRENT ON TUNNEL AT 7502FEET = -.0125449 AMPERES
CURRENT-TO-EARTH AT 7600FEET = 5.80063E-04 AMPERES	CURRENT ON TUNNEL AT 7602FEET = -.0124822 AMPERES
CURRENT-TO-EARTH AT 7700FEET = 5.91634E-04 AMPERES	CURRENT ON TUNNEL AT 7702FEET = -.0124076 AMPERES
CURRENT-TO-EARTH AT 7800FEET = 6.03136E-04 AMPERES	CURRENT ON TUNNEL AT 7802FEET = -.0123192 AMPERES
CURRENT-TO-EARTH AT 7900FEET = 6.14557E-04 AMPERES	CURRENT ON TUNNEL AT 7902FEET = -.0122148 AMPERES
CURRENT-TO-EARTH AT 8000FEET = 6.25881E-04 AMPERES	CURRENT ON TUNNEL AT 8002FEET = -.0120915 AMPERES
CURRENT-TO-EARTH AT 8100FEET = 6.37091E-04 AMPERES	CURRENT ON TUNNEL AT 8102FEET = -.0119465 AMPERES
CURRENT-TO-EARTH AT 8200FEET = 6.48168E-04 AMPERES	CURRENT ON TUNNEL AT 8202FEET = -.0117763 AMPERES
CURRENT-TO-EARTH AT 8300FEET = 6.59088E-04 AMPERES	CURRENT ON TUNNEL AT 8302FEET = -.0115766 AMPERES
CURRENT-TO-EARTH AT 8400FEET = 6.69824E-04 AMPERES	CURRENT ON TUNNEL AT 8402FEET = -.0113426 AMPERES
CURRENT-TO-EARTH AT 8500FEET = 6.80343E-04 AMPERES	CURRENT ON TUNNEL AT 8502FEET = -.0110676 AMPERES
CURRENT-TO-EARTH AT 8600FEET = 6.90608E-04 AMPERES	CURRENT ON TUNNEL AT 8602FEET = -.0107455 AMPERES
CURRENT-TO-EARTH AT 8700FEET = 7.00577E-04 AMPERES	CURRENT ON TUNNEL AT 8702FEET = -.0103682 AMPERES
CURRENT-TO-EARTH AT 8800FEET = 7.10197E-04 AMPERES	CURRENT ON TUNNEL AT 8802FEET = -9.92629E-03 AMPERES
CURRENT-TO-EARTH AT 8900FEET = 7.1941E-04 AMPERES	CURRENT ON TUNNEL AT 8902FEET = -9.40383E-03 AMPERES
CURRENT-TO-EARTH AT 9000FEET = 7.28146E-04 AMPERES	CURRENT ON TUNNEL AT 9002FEET = -8.80238E-03 AMPERES
CURRENT-TO-EARTH AT 9100FEET = 7.36322E-04 AMPERES	CURRENT ON TUNNEL AT 9102FEET = -8.09258E-03 AMPERES

Table C-1 (continued)

CURRENT-TO-EARTH AT 9200FEET = 7.43844E-04 AMPERES	CURRENT ON TUNNEL AT 9202FEET = -7.26146E-03 AMPERES
CURRENT-TO-EARTH AT 9300FEET = 7.506E-04 AMPERES	CURRENT ON TUNNEL AT 9302FEET = -6.2885E-03 AMPERES
CURRENT-TO-EARTH AT 9400FEET = 7.56458E-04 AMPERES	CURRENT ON TUNNEL AT 9402FEET = -5.14928E-03 AMPERES
CURRENT-TO-EARTH AT 9500FEET = 7.61265E-04 AMPERES	CURRENT ON TUNNEL AT 9502FEET = -3.81541E-03 AMPERES
CURRENT-TO-EARTH AT 9600FEET = 7.64843E-04 AMPERES	CURRENT ON TUNNEL AT 9602FEET = -2.25383E-03 AMPERES
CURRENT-TO-EARTH AT 9700FEET = 7.66979E-04 AMPERES	CURRENT ON TUNNEL AT 9702FEET = -4.83483E-04 AMPERES
CURRENT-TO-EARTH AT 9800FEET = 7.6741E-04 AMPERES	CURRENT ON TUNNEL AT 9802FEET = 1.2446E-03 AMPERES
CURRENT-TO-EARTH AT 9900FEET = 7.66211E-04 AMPERES	CURRENT ON TUNNEL AT 9902FEET = 2.73401E-03 AMPERES
CURRENT-TO-EARTH AT 10000FEET = 7.63638E-04 AMPERES	CURRENT ON TUNNEL AT 10002FEET = 4.00603E-03 AMPERES
CURRENT-TO-EARTH AT 10100FEET = 7.59892E-04 AMPERES	CURRENT ON TUNNEL AT 10102FEET = 5.09253E-03 AMPERES
CURRENT-TO-EARTH AT 10200FEET = 7.55144E-04 AMPERES	CURRENT ON TUNNEL AT 10202FEET = 6.02058E-03 AMPERES
CURRENT-TO-EARTH AT 10300FEET = 7.4954E-04 AMPERES	CURRENT ON TUNNEL AT 10302FEET = 6.81332E-03 AMPERES
CURRENT-TO-EARTH AT 10400FEET = 7.43205E-04 AMPERES	CURRENT ON TUNNEL AT 10402FEET = 7.49046E-03 AMPERES
CURRENT-TO-EARTH AT 10500FEET = 7.36245E-04 AMPERES	CURRENT ON TUNNEL AT 10502FEET = 8.06886E-03 AMPERES
CURRENT-TO-EARTH AT 10600FEET = 7.28752E-04 AMPERES	CURRENT ON TUNNEL AT 10602FEET = 8.56286E-03 AMPERES
CURRENT-TO-EARTH AT 10700FEET = 7.20803E-04 AMPERES	CURRENT ON TUNNEL AT 10702FEET = 8.98477E-03 AMPERES
CURRENT-TO-EARTH AT 10800FEET = 7.12465E-04 AMPERES	CURRENT ON TUNNEL AT 10802FEET = 9.34512E-03 AMPERES
CURRENT-TO-EARTH AT 10900FEET = 7.03795E-04 AMPERES	CURRENT ON TUNNEL AT 10902FEET = 9.65282E-03 AMPERES
CURRENT-TO-EARTH AT 11000FEET = 6.94841E-04 AMPERES	CURRENT ON TUNNEL AT 11002FEET = 9.91553E-03 AMPERES
CURRENT-TO-EARTH AT 11100FEET = 6.85644E-04 AMPERES	CURRENT ON TUNNEL AT 11102FEET = .0101399 AMPERES
CURRENT-TO-EARTH AT 11200FEET = 6.76241E-04 AMPERES	CURRENT ON TUNNEL AT 11202FEET = .0103314 AMPERES
CURRENT-TO-EARTH AT 11300FEET = 6.66661E-04 AMPERES	CURRENT ON TUNNEL AT 11302FEET = .010495 AMPERES
CURRENT-TO-EARTH AT 11400FEET = 6.5693E-04 AMPERES	CURRENT ON TUNNEL AT 11402FEET = .0106344 AMPERES
CURRENT-TO-EARTH AT 11500FEET = 6.4707E-04 AMPERES	CURRENT ON TUNNEL AT 11502FEET = .0107536 AMPERES
CURRENT-TO-EARTH AT 11600FEET = 6.37101E-04 AMPERES	CURRENT ON TUNNEL AT 11602FEET = .010855 AMPERES
CURRENT-TO-EARTH AT 11700FEET = 6.27038E-04 AMPERES	CURRENT ON TUNNEL AT 11702FEET = .0109416 AMPERES
CURRENT-TO-EARTH AT 11800FEET = 6.16895E-04 AMPERES	CURRENT ON TUNNEL AT 11802FEET = .0110152 AMPERES
CURRENT-TO-EARTH AT 11900FEET = 6.06684E-04 AMPERES	CURRENT ON TUNNEL AT 11902FEET = .0110778 AMPERES
CURRENT-TO-EARTH AT 12000FEET = 5.96415E-04 AMPERES	CURRENT ON TUNNEL AT 12002FEET = .0111309 AMPERES
CURRENT-TO-EARTH AT 12100FEET = 5.86098E-04 AMPERES	CURRENT ON TUNNEL AT 12102FEET = .0111759 AMPERES
CURRENT-TO-EARTH AT 12200FEET = 5.75739E-04 AMPERES	CURRENT ON TUNNEL AT 12202FEET = .0112139 AMPERES
CURRENT-TO-EARTH AT 12300FEET = 5.65344E-04 AMPERES	CURRENT ON TUNNEL AT 12302FEET = .0112457 AMPERES
CURRENT-TO-EARTH AT 12400FEET = 5.5492E-04 AMPERES	CURRENT ON TUNNEL AT 12402FEET = .0112724 AMPERES
CURRENT-TO-EARTH AT 12500FEET = 5.44472E-04 AMPERES	CURRENT ON TUNNEL AT 12502FEET = .0112944 AMPERES
CURRENT-TO-EARTH AT 12600FEET = 5.34003E-04 AMPERES	CURRENT ON TUNNEL AT 12602FEET = .0113126 AMPERES
CURRENT-TO-EARTH AT 12700FEET = 5.23518E-04 AMPERES	CURRENT ON TUNNEL AT 12702FEET = .0113269 AMPERES
CURRENT-TO-EARTH AT 12800FEET = 5.13019E-04 AMPERES	CURRENT ON TUNNEL AT 12802FEET = .0113381 AMPERES
CURRENT-TO-EARTH AT 12900FEET = 5.0251E-04 AMPERES	CURRENT ON TUNNEL AT 12902FEET = .0113463 AMPERES
CURRENT-TO-EARTH AT 13000FEET = 4.91993E-04 AMPERES	CURRENT ON TUNNEL AT 13002FEET = .0113516 AMPERES
CURRENT-TO-EARTH AT 13100FEET = 4.81471E-04 AMPERES	CURRENT ON TUNNEL AT 13102FEET = .0113544 AMPERES
CURRENT-TO-EARTH AT 13200FEET = 4.70947E-04 AMPERES	CURRENT ON TUNNEL AT 13202FEET = .0113546 AMPERES
CURRENT-TO-EARTH AT 13300FEET = 4.60423E-04 AMPERES	CURRENT ON TUNNEL AT 13302FEET = .0113523 AMPERES
CURRENT-TO-EARTH AT 13400FEET = 4.499E-04 AMPERES	CURRENT ON TUNNEL AT 13402FEET = .0113474 AMPERES
CURRENT-TO-EARTH AT 13500FEET = 4.39382E-04 AMPERES	CURRENT ON TUNNEL AT 13502FEET = .0113396 AMPERES
CURRENT-TO-EARTH AT 13600FEET = 4.28872E-04 AMPERES	CURRENT ON TUNNEL AT 13602FEET = .011329 AMPERES
CURRENT-TO-EARTH AT 13700FEET = 4.1837E-04 AMPERES	CURRENT ON TUNNEL AT 13702FEET = .0113153 AMPERES
CURRENT-TO-EARTH AT 13800FEET = 4.07882E-04 AMPERES	CURRENT ON TUNNEL AT 13802FEET = .011298 AMPERES
CURRENT-TO-EARTH AT 13900FEET = 3.9741E-04 AMPERES	CURRENT ON TUNNEL AT 13902FEET = .0112767 AMPERES
CURRENT-TO-EARTH AT 14000FEET = 3.86957E-04 AMPERES	CURRENT ON TUNNEL AT 14002FEET = .0112509 AMPERES
CURRENT-TO-EARTH AT 14100FEET = 3.76528E-04 AMPERES	CURRENT ON TUNNEL AT 14102FEET = .01122 AMPERES
CURRENT-TO-EARTH AT 14200FEET = 3.66127E-04 AMPERES	CURRENT ON TUNNEL AT 14202FEET = .0111832 AMPERES
CURRENT-TO-EARTH AT 14300FEET = 3.5576E-04 AMPERES	CURRENT ON TUNNEL AT 14302FEET = .0111395 AMPERES
CURRENT-TO-EARTH AT 14400FEET = 3.45434E-04 AMPERES	CURRENT ON TUNNEL AT 14402FEET = .0110881 AMPERES
CURRENT-TO-EARTH AT 14500FEET = 3.35155E-04 AMPERES	CURRENT ON TUNNEL AT 14502FEET = .0110274 AMPERES
CURRENT-TO-EARTH AT 14600FEET = 3.24931E-04 AMPERES	CURRENT ON TUNNEL AT 14602FEET = .0109561 AMPERES
CURRENT-TO-EARTH AT 14700FEET = 3.14774E-04 AMPERES	CURRENT ON TUNNEL AT 14702FEET = .0108722 AMPERES

Table C-1 (continued)

CURRENT-TO-EARTH AT 14800FEET = 3.04694E-04 AMPERES	CURRENT ON TUNNEL AT 14802FEET = .0107739 AMPERES
CURRENT-TO-EARTH AT 14900FEET = 2.94704E-04 AMPERES	CURRENT ON TUNNEL AT 14902FEET = .0106586 AMPERES
CURRENT-TO-EARTH AT 15000FEET = 2.84821E-04 AMPERES	CURRENT ON TUNNEL AT 15002FEET = .0105233 AMPERES
CURRENT-TO-EARTH AT 15100FEET = 2.75062E-04 AMPERES	CURRENT ON TUNNEL AT 15102FEET = .0103649 AMPERES
CURRENT-TO-EARTH AT 15200FEET = 2.6545E-04 AMPERES	CURRENT ON TUNNEL AT 15202FEET = .0101793 AMPERES
CURRENT-TO-EARTH AT 15300FEET = 2.56009E-04 AMPERES	CURRENT ON TUNNEL AT 15302FEET = 9.96184E-03 AMPERES
CURRENT-TO-EARTH AT 15400FEET = 2.46768E-04 AMPERES	CURRENT ON TUNNEL AT 15402FEET = 9.70714E-03 AMPERES
CURRENT-TO-EARTH AT 15500FEET = 2.37762E-04 AMPERES	CURRENT ON TUNNEL AT 15502FEET = 9.409E-03 AMPERES
CURRENT-TO-EARTH AT 15600FEET = 2.29031E-04 AMPERES	CURRENT ON TUNNEL AT 15602FEET = 9.05987E-03 AMPERES
CURRENT-TO-EARTH AT 15700FEET = 2.20622E-04 AMPERES	CURRENT ON TUNNEL AT 15702FEET = 8.65113E-03 AMPERES
CURRENT-TO-EARTH AT 15800FEET = 2.1259E-04 AMPERES	CURRENT ON TUNNEL AT 15802FEET = 8.17253E-03 AMPERES
CURRENT-TO-EARTH AT 15900FEET = 2.05E-04 AMPERES	CURRENT ON TUNNEL AT 15902FEET = 7.65592E-03 AMPERES
CURRENT-TO-EARTH AT 16000FEET = 1.97918E-04 AMPERES	CURRENT ON TUNNEL AT 16002FEET = 7.18176E-03 AMPERES
CURRENT-TO-EARTH AT 16100FEET = 1.91272E-04 AMPERES	CURRENT ON TUNNEL AT 16102FEET = 6.77667E-03 AMPERES
CURRENT-TO-EARTH AT 16200FEET = 1.85001E-04 AMPERES	CURRENT ON TUNNEL AT 16202FEET = 6.43038E-03 AMPERES
CURRENT-TO-EARTH AT 16300FEET = 1.79048E-04 AMPERES	CURRENT ON TUNNEL AT 16302FEET = 6.13427E-03 AMPERES
CURRENT-TO-EARTH AT 16400FEET = 1.73269E-04 AMPERES	CURRENT ON TUNNEL AT 16402FEET = 5.88132E-03 AMPERES
CURRENT-TO-EARTH AT 16500FEET = 1.67923E-04 AMPERES	CURRENT ON TUNNEL AT 16502FEET = 5.66487E-03 AMPERES
CURRENT-TO-EARTH AT 16600FEET = 1.62676E-04 AMPERES	CURRENT ON TUNNEL AT 16602FEET = 5.4797E-03 AMPERES
CURRENT-TO-EARTH AT 16700FEET = 1.57601E-04 AMPERES	CURRENT ON TUNNEL AT 16702FEET = 5.32127E-03 AMPERES
CURRENT-TO-EARTH AT 16800FEET = 1.52671E-04 AMPERES	CURRENT ON TUNNEL AT 16802FEET = 5.1853E-03 AMPERES
CURRENT-TO-EARTH AT 16900FEET = 1.47887E-04 AMPERES	CURRENT ON TUNNEL AT 16902FEET = 5.06366E-03 AMPERES
CURRENT-TO-EARTH AT 17000FEET = 1.43171E-04 AMPERES	CURRENT ON TUNNEL AT 17002FEET = 4.96831E-03 AMPERES
CURRENT-TO-EARTH AT 17100FEET = 1.38567E-04 AMPERES	CURRENT ON TUNNEL AT 17102FEET = 4.88192E-03 AMPERES
CURRENT-TO-EARTH AT 17200FEET = 1.34042E-04 AMPERES	CURRENT ON TUNNEL AT 17202FEET = 4.80718E-03 AMPERES
CURRENT-TO-EARTH AT 17300FEET = 1.29587E-04 AMPERES	CURRENT ON TUNNEL AT 17302FEET = 4.74244E-03 AMPERES
CURRENT-TO-EARTH AT 17400FEET = 1.25191E-04 AMPERES	CURRENT ON TUNNEL AT 17402FEET = 4.68596E-03 AMPERES
CURRENT-TO-EARTH AT 17500FEET = 1.20847E-04 AMPERES	CURRENT ON TUNNEL AT 17502FEET = 4.63636E-03 AMPERES
CURRENT-TO-EARTH AT 17600FEET = 1.16549E-04 AMPERES	CURRENT ON TUNNEL AT 17602FEET = 4.59233E-03 AMPERES
CURRENT-TO-EARTH AT 17700FEET = 1.12292E-04 AMPERES	CURRENT ON TUNNEL AT 17702FEET = 4.55302E-03 AMPERES
CURRENT-TO-EARTH AT 17800FEET = 1.08071E-04 AMPERES	CURRENT ON TUNNEL AT 17802FEET = 4.51716E-03 AMPERES
CURRENT-TO-EARTH AT 17900FEET = 1.03883E-04 AMPERES	CURRENT ON TUNNEL AT 17902FEET = 4.4839E-03 AMPERES
CURRENT-TO-EARTH AT 18000FEET = 9.97255E-05 AMPERES	CURRENT ON TUNNEL AT 18002FEET = 4.45253E-03 AMPERES
CURRENT-TO-EARTH AT 18100FEET = 9.55972E-05 AMPERES	CURRENT ON TUNNEL AT 18102FEET = 4.42206E-03 AMPERES
CURRENT-TO-EARTH AT 18200FEET = 9.14969E-05 AMPERES	CURRENT ON TUNNEL AT 18202FEET = 4.39203E-03 AMPERES
CURRENT-TO-EARTH AT 18300FEET = 8.74244E-05 AMPERES	CURRENT ON TUNNEL AT 18302FEET = 4.36148E-03 AMPERES
CURRENT-TO-EARTH AT 18400FEET = 8.33801E-05 AMPERES	CURRENT ON TUNNEL AT 18402FEET = 4.32983E-03 AMPERES
CURRENT-TO-EARTH AT 18500FEET = 7.93651E-05 AMPERES	CURRENT ON TUNNEL AT 18502FEET = 4.29597E-03 AMPERES
CURRENT-TO-EARTH AT 18600FEET = 7.53812E-05 AMPERES	CURRENT ON TUNNEL AT 18602FEET = 4.25935E-03 AMPERES
CURRENT-TO-EARTH AT 18700FEET = 7.14311E-05 AMPERES	CURRENT ON TUNNEL AT 18702FEET = 4.21894E-03 AMPERES
CURRENT-TO-EARTH AT 18800FEET = 6.75183E-05 AMPERES	CURRENT ON TUNNEL AT 18802FEET = 4.17381E-03 AMPERES
CURRENT-TO-EARTH AT 18900FEET = 6.36471E-05 AMPERES	CURRENT ON TUNNEL AT 18902FEET = 4.12277E-03 AMPERES
CURRENT-TO-EARTH AT 19000FEET = 5.9823E-05 AMPERES	CURRENT ON TUNNEL AT 19002FEET = 4.06457E-03 AMPERES
CURRENT-TO-EARTH AT 19100FEET = 5.60526E-05 AMPERES	CURRENT ON TUNNEL AT 19102FEET = 3.99774E-03 AMPERES
CURRENT-TO-EARTH AT 19200FEET = 5.23439E-05 AMPERES	CURRENT ON TUNNEL AT 19202FEET = 3.92059E-03 AMPERES
CURRENT-TO-EARTH AT 19300FEET = 4.87062E-05 AMPERES	CURRENT ON TUNNEL AT 19302FEET = 3.83133E-03 AMPERES
CURRENT-TO-EARTH AT 19400FEET = 4.5151E-05 AMPERES	CURRENT ON TUNNEL AT 19402FEET = 3.72751E-03 AMPERES
CURRENT-TO-EARTH AT 19500FEET = 4.16914E-05 AMPERES	CURRENT ON TUNNEL AT 19502FEET = 3.60678E-03 AMPERES
CURRENT-TO-EARTH AT 19600FEET = 3.83432E-05 AMPERES	CURRENT ON TUNNEL AT 19602FEET = 3.466E-03 AMPERES
CURRENT-TO-EARTH AT 19700FEET = 3.51247E-05 AMPERES	CURRENT ON TUNNEL AT 19702FEET = 3.30177E-03 AMPERES
CURRENT-TO-EARTH AT 19800FEET = 3.20578E-05 AMPERES	CURRENT ON TUNNEL AT 19802FEET = 3.10984E-03 AMPERES
CURRENT-TO-EARTH AT 19900FEET = 2.91678E-05 AMPERES	CURRENT ON TUNNEL AT 19902FEET = 2.88769E-03 AMPERES
CURRENT-TO-EARTH AT 20000FEET = 2.64673E-05 AMPERES	CURRENT ON TUNNEL AT 20002FEET = 2.65954E-03 AMPERES
CURRENT-TO-EARTH AT 20100FEET = 2.40264E-05 AMPERES	CURRENT ON TUNNEL AT 20102FEET = 2.45437E-03 AMPERES
CURRENT-TO-EARTH AT 20200FEET = 2.17542E-05 AMPERES	CURRENT ON TUNNEL AT 20202FEET = 2.27335E-03 AMPERES
CURRENT-TO-EARTH AT 20300FEET = 1.96489E-05 AMPERES	CURRENT ON TUNNEL AT 20302FEET = 2.11209E-03 AMPERES

Table C-1 (continued)

CURRENT-TO-EARTH AT 20400FEET = 1.7692E-05 AMPERES	CURRENT ON TUNNEL AT 20402FEET = 1.96659E-03 AMPERES
CURRENT-TO-EARTH AT 20500FEET = 1.58692E-05 AMPERES	CURRENT ON TUNNEL AT 20502FEET = 1.83346E-03 AMPERES
CURRENT-TO-EARTH AT 20600FEET = 1.41691E-05 AMPERES	CURRENT ON TUNNEL AT 20602FEET = 1.70918E-03 AMPERES
CURRENT-TO-EARTH AT 20700FEET = 1.25836E-05 AMPERES	CURRENT ON TUNNEL AT 20702FEET = 1.5907E-03 AMPERES
CURRENT-TO-EARTH AT 20800FEET = 1.11074E-05 AMPERES	CURRENT ON TUNNEL AT 20802FEET = 1.47503E-03 AMPERES
CURRENT-TO-EARTH AT 20900FEET = 9.7378E-06 AMPERES	CURRENT ON TUNNEL AT 20902FEET = 1.35924E-03 AMPERES
CURRENT-TO-EARTH AT 21000FEET = 8.47495E-06 AMPERES	CURRENT ON TUNNEL AT 21002FEET = 1.24057E-03 AMPERES
CURRENT-TO-EARTH AT 21100FEET = 7.32152E-06 AMPERES	CURRENT ON TUNNEL AT 21102FEET = 1.11595E-03 AMPERES
CURRENT-TO-EARTH AT 21200FEET = 6.28295E-06 AMPERES	CURRENT ON TUNNEL AT 21202FEET = 9.82285E-04 AMPERES

Table C-3

Anticipated Current Densities

Tunnel to Earth Resistance[1] (ohms per foot)	Maximum Current loss amperes	Single Fault Area (cm^2)	Single Fault Current Density (μ amp/cm^2)	Two Faults Area (cm^2)	Two Faults Current Density (μ amp/cm^2)	Four Faults Area (cm^2)	Four Faults Current Density (μ amp/cm^2)
20	7.6×10^{-4}	2376	.32	594	1.3	149	5.1
800	4.8×10^{-4}	1.5	320	.37	1300	.093	5161
1600	3.8×10^{-4}	.37	1027	.093	4086	.023	16.522
6400	2.4×10^{-4}	.023	10,344	.006	65,513	.0015	162,050

1 Earth resistance remains constant causing a decrease in bare area as number of faults increases.

STRAY CURRENT DISTRIBUTION MODEL FOR TUNNEL

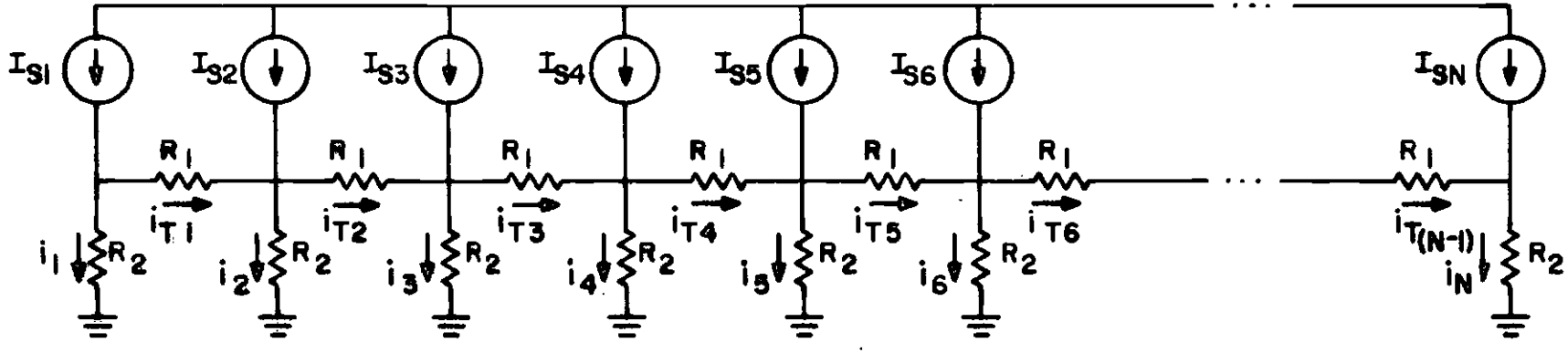

UNIT LENGTH OF TUNNEL

R_1 = LONGITUDINAL RESISTANCE OF TUNNEL

R_2 = TUNNEL - TO - EARTH RESISTANCE

I_S = STRAY EARTH CURRENT FROM RAILS = $MX + \alpha$; WHERE X = DISTANCE

i_N = TUNNEL-TO-EARTH CURRENT

$i_{T(N)}$ = CURRENT FLOW ON TUNNEL

PLATE C-1

PLATE C-2

Earth Current Flow Off Tunnel vs. Distance

CASE	R_2 (Ω/FT.)	R_1 (μΩ/FT.)
A	20	50
B	800	50
C	1600	50
D	6400	50
E	6400	25

LOAD LOCATION (STA. NO. 468+15)

CASE B

CASE C

CASE D

CASE E

CASE A

ACTUAL LOAD CURRENT PROFILE FROM PLATE 8-12

EARTH CURRENT FLOW FROM TUNNEL (AMPERES)

10^{-3}

10^{-4}

10^{-5}

10^{-6}

STA. NO. 415+00

STA. NO. 468+15

STA. NO. 530+00

STA. NO. 570+55

DISTANCE ALONG SYSTEM FROM STA. NO. 370+99 (FEET)

0 2000 4000 6000 8000 10000 12000 14000 16000 18000 20000 22000

47 6010

K&E SEMI-LOGARITHMIC 4 CYCLES X 150 DIVISIONS
KEUFFEL & ESSER CO. MADE IN U.S.A.

Current Flow On Tunnel vs. Distance

K•E SEMI-LOGARITHMIC 4 CYCLES X 150 DIVISIONS
KEUFFEL & ESSER CO. MADE IN U.S.A.
47 6010

LOAD LOCATION (STA. NO. 468+15)

LOCATION OF MAXIMUM CURRENT FLOW ON TUNNEL

CASE E

CASE D

CASE C

CASE B

CASE A

CASE	R_2 (Ω/FT.)	R_1 (μΩ/FT.)
A	20	50
B	800	50
C	1600	50
D	6400	50
E	6400	25

CURRENT FLOW ON TUNNEL (AMPERES)

10^{-1}

10^{-2}

10^{-3}

10^{-4}

ACTUAL LOAD CURRENT PROFILE FROM PLATE B-12

STA. NO. 415+00

STA. NO. 468+15

STA. NO. 530+00

STA. NO. 570+00

DISTANCE ALONG SYSTEM FROM STA. NO. 370+99 (FEET)

0 2000 4000 6000 8000 10000 1200 1400 1600 1800 20000 22000

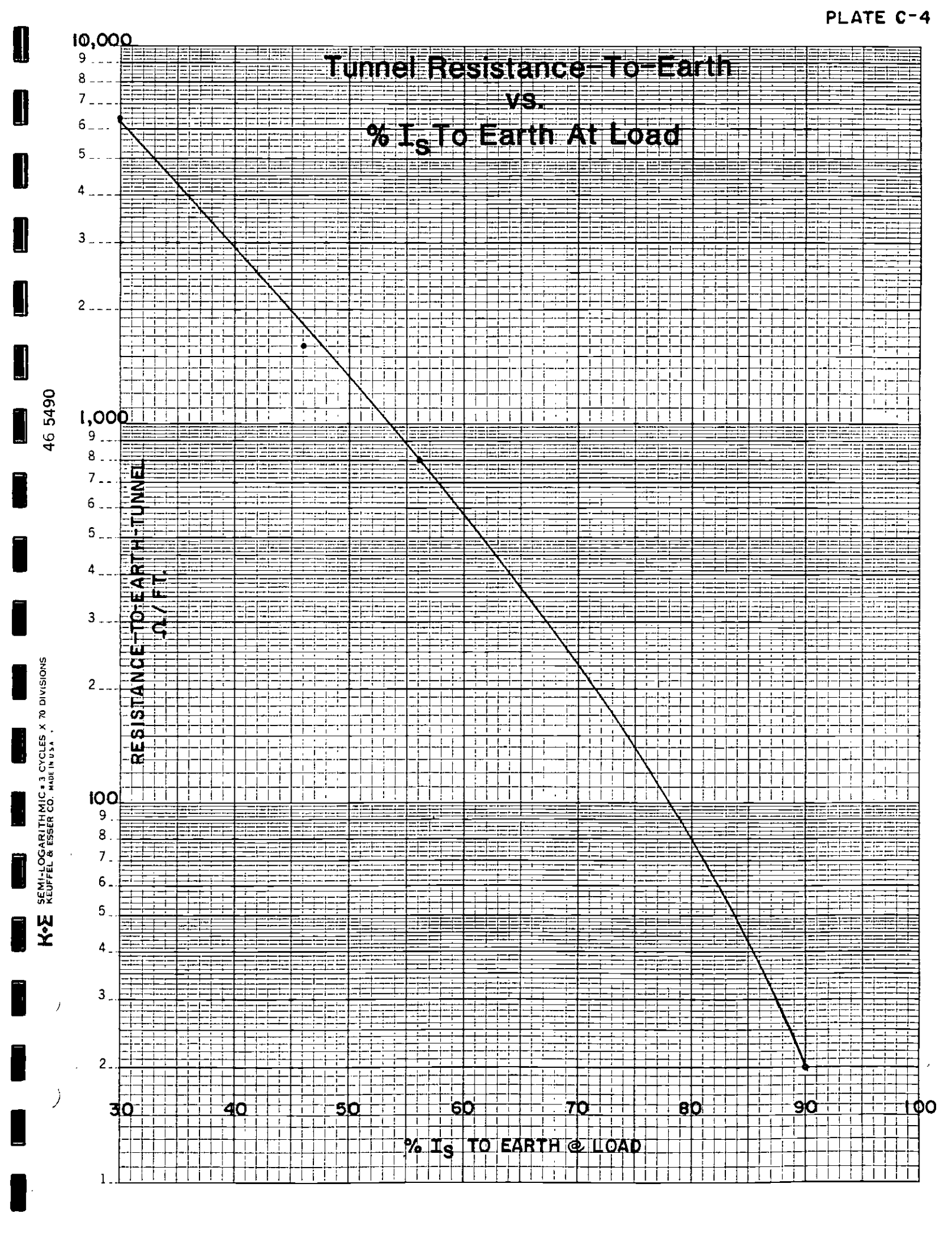
Tunnel Resistance-To-Earth
vs.
% I_S To Earth At Load
RESISTANCE-TO-EARTH-TUNNEL Ω/FT.
10,000
1,000
100
30
40
50
60
70
80
90
100
% I_S TO EARTH @ LOAD
46 5490
K+E SEMI-LOGARITHMIC • 3 CYCLES X 70 DIVISIONS
KEUFFEL & ESSER CO. MADE IN U.S.A.

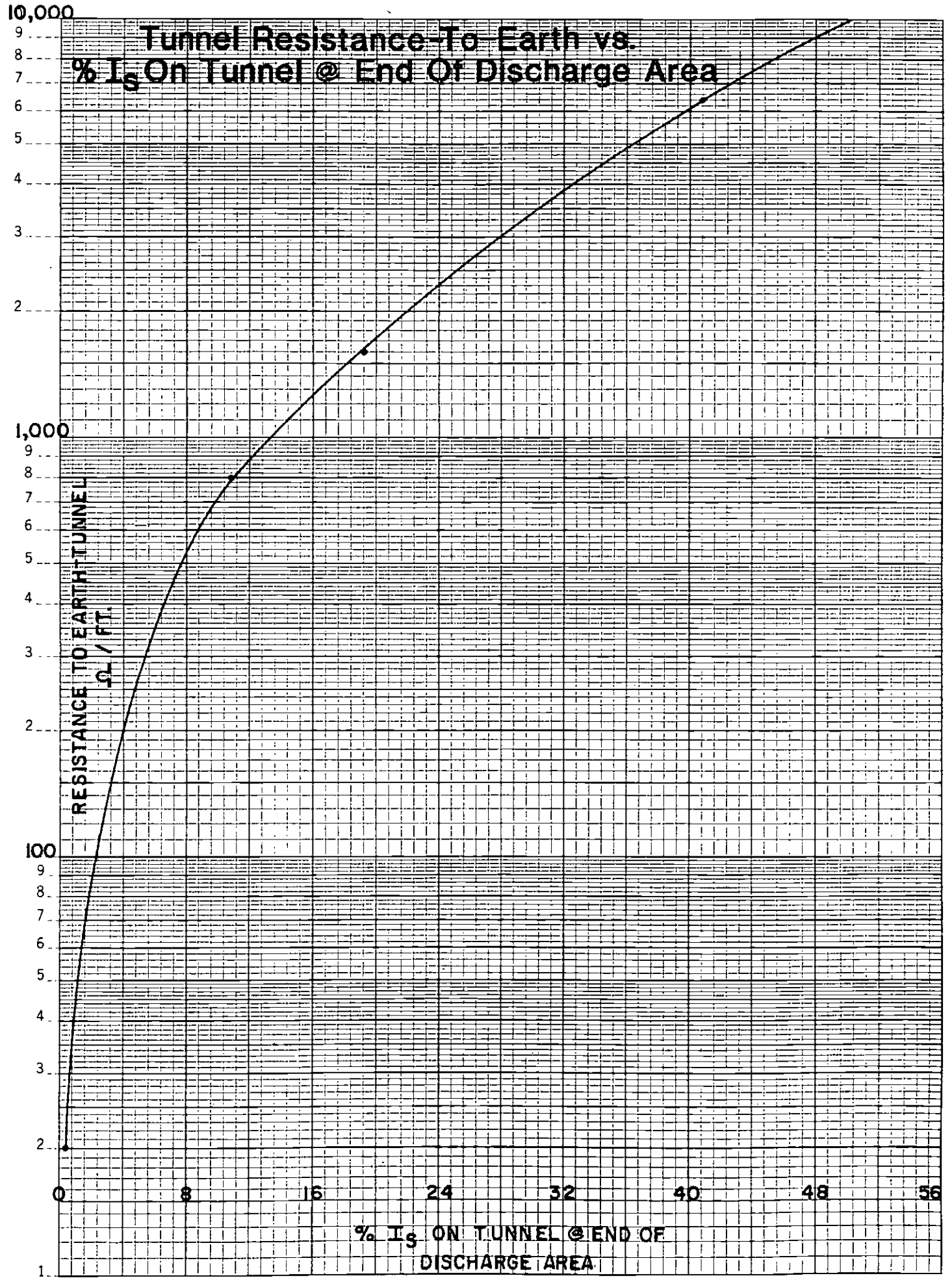

46 5490

K+E SEMI-LOGARITHMIC • 3 CYCLES X 70 DIVISIONS KEUFFEL & ESSER CO. MADE IN U.S.A.

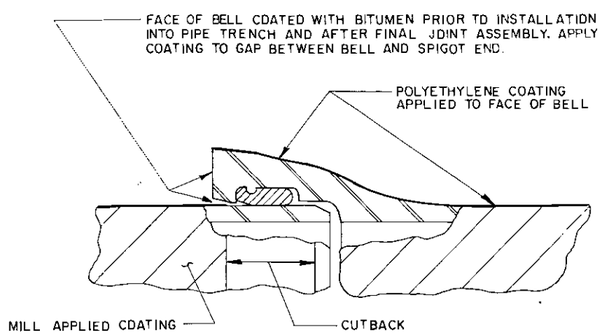

DETAIL
PUSH-ON JOINT COATING ARRANGEMENT - TYPICAL (1)

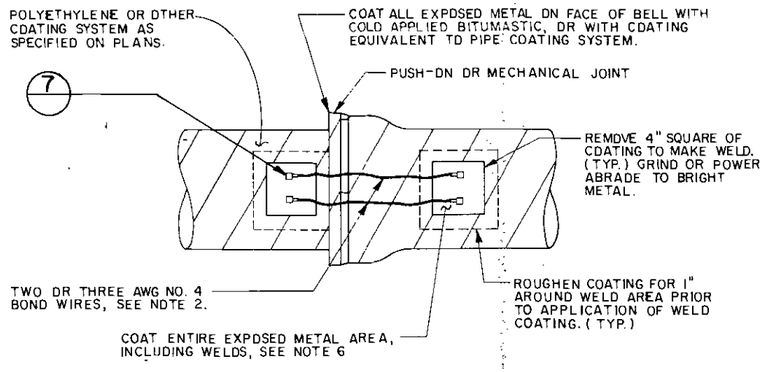

DETAIL
PUSH-ON OR MECHANICAL JOINT BOND (2)

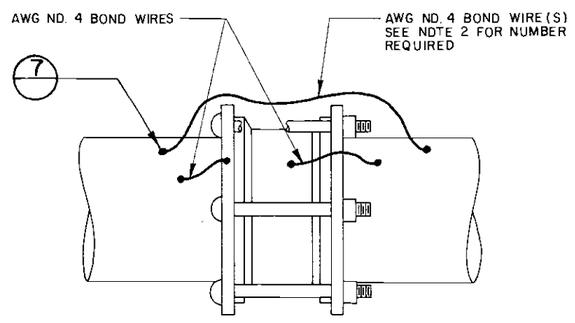

NOTE: ALL EXPOSED METAL TO BE COATED WITH PROTECTIVE COATING, AT LEAST EQUIVALENT TO COATING ON LINE PIPE. WHEN PIPE IS BARE, USE COLD APPLIED BITUMEN ON ENTIRE FIXTURE.

DETAIL
COUPLING BOND (3)

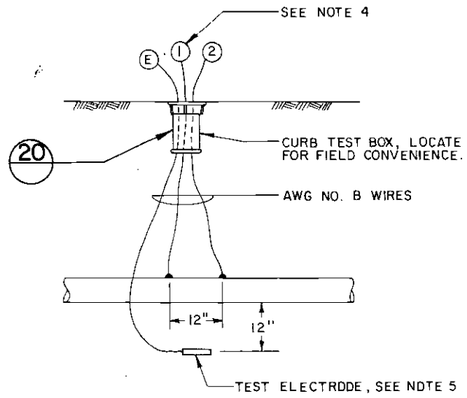

DETAIL
IN-LINE TEST STATION (4)

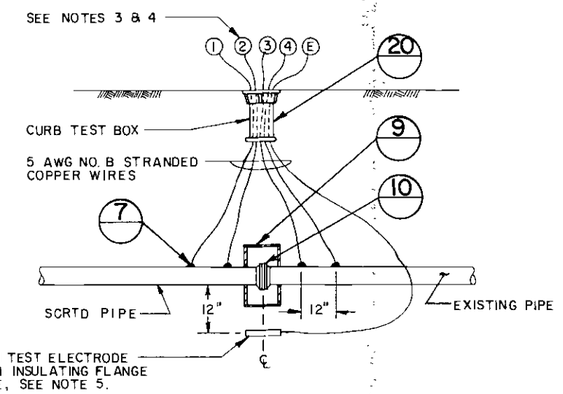

DETAIL
INSULATING JOINT TEST STATION (5)

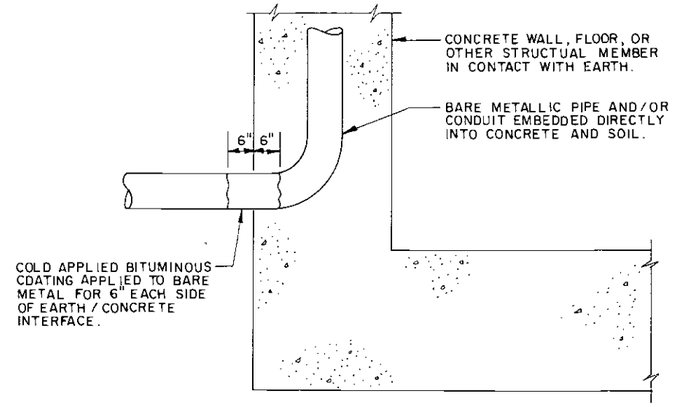

DETAIL
COATING - BARE METAL / SOIL / CONCRETE INTERFACE (6)

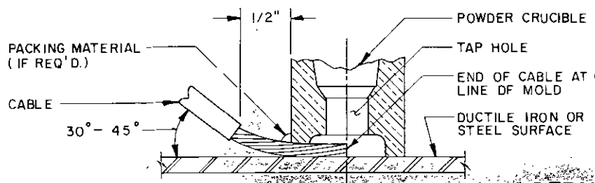

DETAIL
THERMITE WELD MOLD POSITIONING (7)

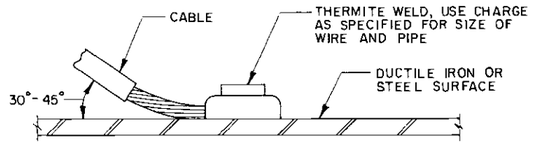

NOTES:

1. WIRES SIZED AS SPECIFIED, STRANDED COPPER WITH 600 VOLT TYPE THW INSULATION.
2. TWO BOND WIRES REQUIRED FOR PIPE UP TO 12" IN DIAMETER, THREE FOR PIPE FROM 16" AND LARGER. BOND WIRES TO BE NOMINAL 18" IN LENGTH.
3. ALL TEST STATIONS REQUIRE SUFFICIENT SLACK WIRE SUCH THAT LEADS CAN BE EXTENDED 12" ABOVE GRADE.
4. ALL TEST STATION WIRES TO BE IDENTIFIED AS SHOWN WITH STAMPED BRASS TAGS 1" DIAMETER.
5. TEST ELECTRODES: NO. 6 REINFORCING STEEL X 6" LONG. WIRE ATTACHED BY BRAZING. WELD AREA TO BE COATED WITH COLD APPLIED BITUMEN.
6. ALL THERMITE WELD AREAS ARE TO BE COATED AS FOLLOWS;
   DUCTILE IRON - USE COLD APPLIED BITUMEN.
   STEEL COATED PIPE - USE COATING EQUIVALENT TO PIPELINE COATING SYSTEM.

REV.	DATE	BY	APP.	DESCRIPTION

DESIGNED BY R.C.SMITH Date 5-13-83
DRAWN BY K.C.KELLY Date 5-13-83
CHECKED BY D.M.WATERS Date 6-9-83

WATERS CONSULTANTS
PROFESSIONAL SERVICES GROUP, INC.
CORROSION ENGINEERS
7807 CONVOY COURT SAN DIEGO, CA. 92111
SUBMITTED BY
PROJECT MANAGER

SOUTHERN CALIFORNIA RAPID TRANSIT DISTRICT
METRO RAIL PROJECT
RTD
APPROVAL RECOMMENDED Reg. No
APPROVED Date
MANAGER / CHIEF ENGINEER Reg. No

CORROION CONTROL
COATING, BONDING & TEST STATIONS

CONTRACT NO.
DRAWING NO.
SCALE NO SCALE
SHEET NO. 1

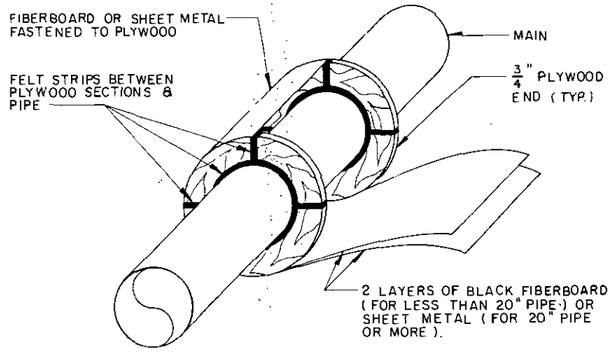

DETAIL
COATING MOLD CONSTRUCTION (8)

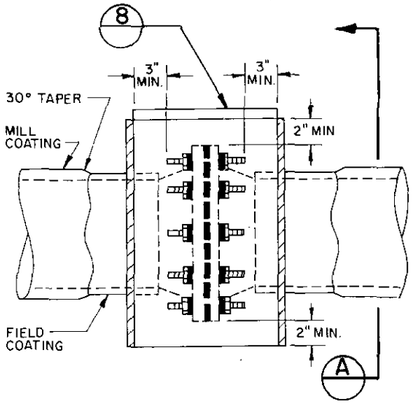

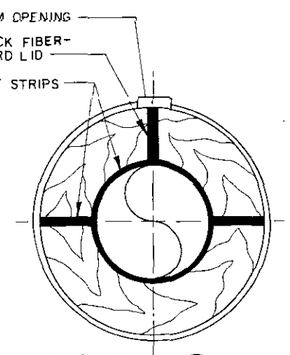

SECTION (A)

DETAIL
UNDERGROUND COATING MOLD FOR INSULATING JOINT (9)

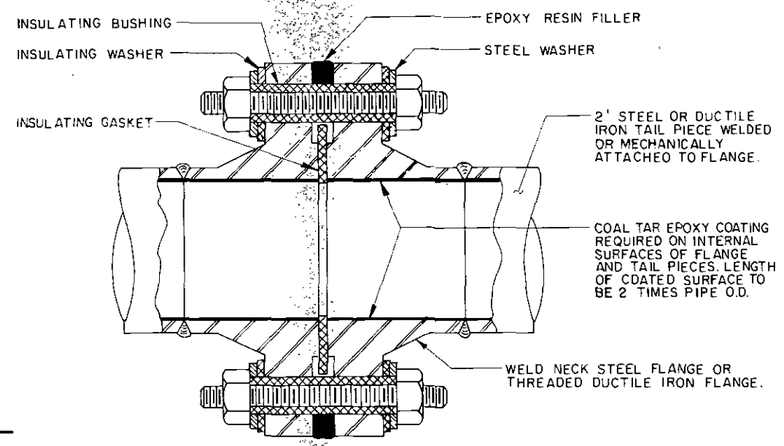

DETAIL
INSULATING FLANGE ASSEMBLY (10)

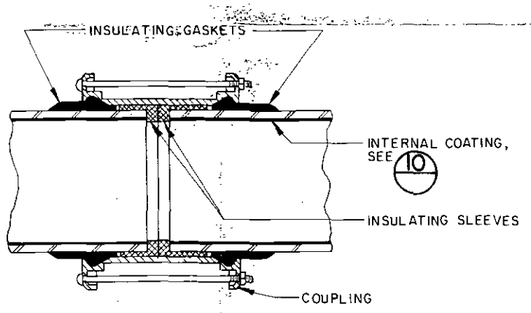

DETAIL
INSULATING COUPLING (11)

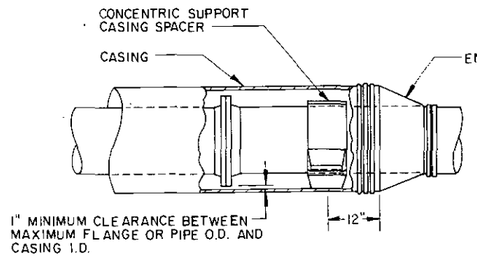

DETAIL
CASING ISOLATION (12)

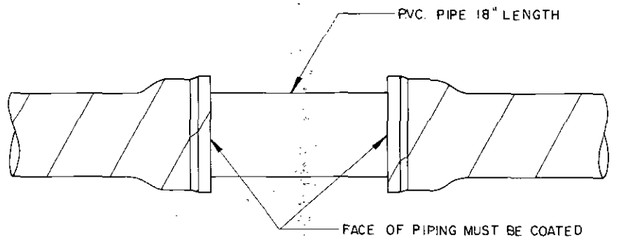

DETAIL
P.V.C. INSULATING JOINT (13)

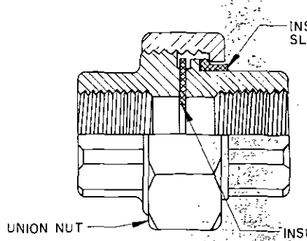

DETAIL
INSULATING UNION (14)

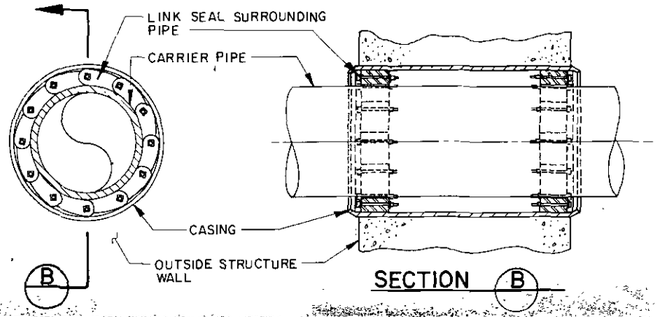

SECTION (B)

DETAIL
WALL SEAL / INSULATION (15)

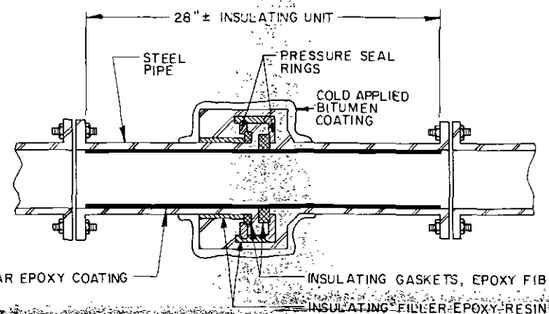

DETAIL
PREASSEMBLED INSULATING UNIT FOR EXPOSED INSTALLATIONS (16)

REV.	DATE	BY	APP.	DESCRIPTION

DESIGNED BY R.C. SMITH Date 5-13-83
DRAWN BY K.C. KELLY Date 5-13-83
CHECKED BY D.M. WATERS Date 6-9-83

REGISTERED PROFESSIONAL ENGINEER — No. 872 — STATE OF CALIFORNIA

WATERS CONSULTANTS
PROFESSIONAL SERVICES GROUP, INC.
CORROSION ENGINEERS
7807 CONVOY COURT SAN DIEGO, CA. 92111
SUBMITTED BY
Donald M Waters
PROJECT MANAGER

SOUTHERN CALIFORNIA RAPID TRANSIT DISTRICT
METRO RAIL PROJECT
RTD

APPROVAL RECOMMENDED _____ Reg. No. _____
APPROVED _____ Date _____
MANAGER / CHIEF ENGINEER Reg. No. _____

CORROSION CONTROL
INSULATING DEVICES

CONTRACT NO.
DRAWING NO.
SCALE NO SCALE
SHEET NO. 2

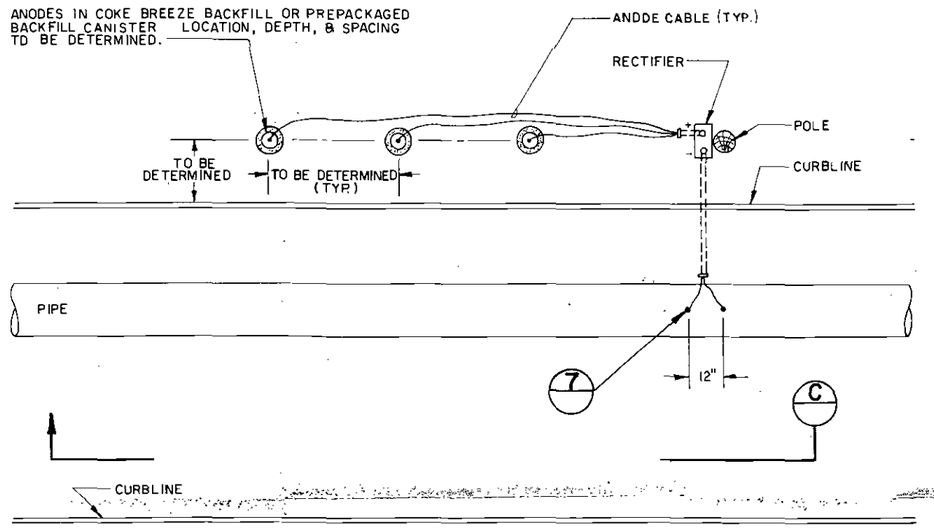

DETAIL
IMPRESSED CURRENT CATHODIC PROTECTION SYSTEM (TYPICAL) 17

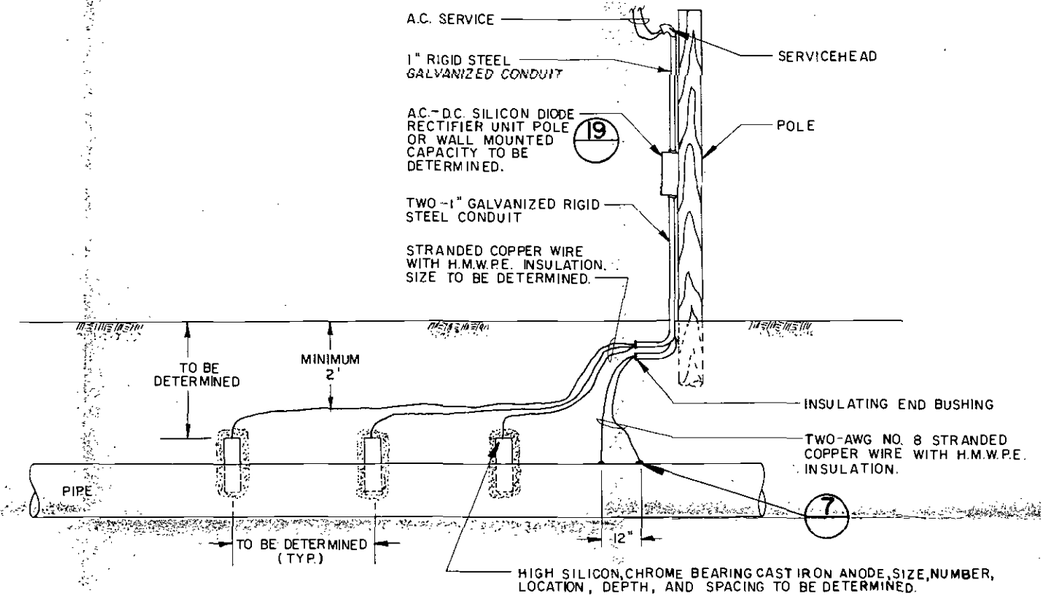

SECTION C

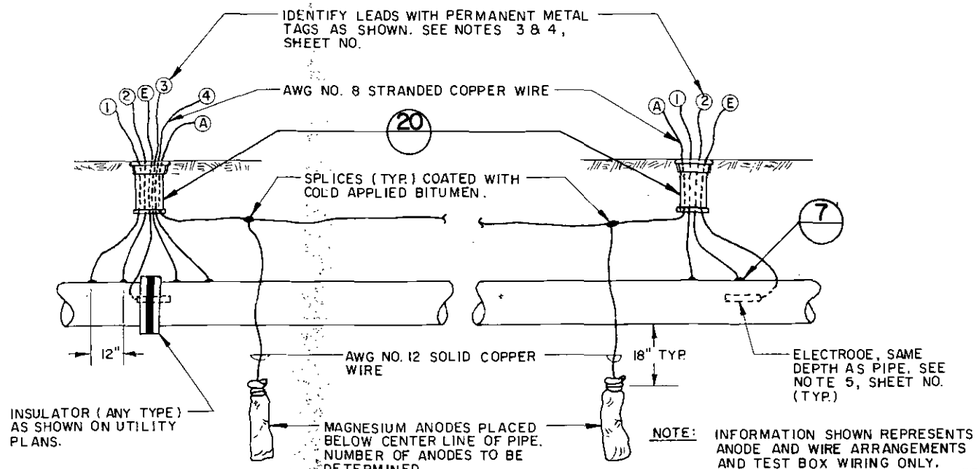

DETAIL
MAGNESIUM ANODE TEST STATION 18

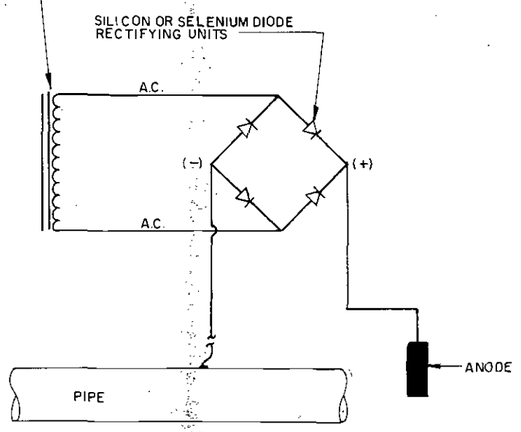

DETAIL
TYPICAL RECTIFIER ARRANGEMENT 19

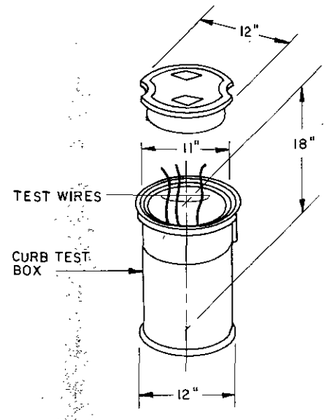

DETAIL
CURB TEST BOX 20

REV.	DATE	BY	APP.	DESCRIPTION

DESIGNED BY R.C.SMITH Date 5-13-83
DRAWN BY K.C.KELLY Date 5-13-83
CHECKED BY D.M.WATERS Date 6-9-83

REGISTERED PROFESSIONAL ENGINEER No. 372 CORROSION

WATERS CONSULTANTS
PROFESSIONAL SERVICES GROUP, INC.
CORROSION ENGINEERS
7807 CONVOY COURT SAN DIEGO, CA. 92111
SUBMITTED BY
Donald M Waters
PROJECT MANAGER

SOUTHERN CALIFORNIA RAPID TRANSIT DISTRICT
METRO RAIL PROJECT
RTD

APPROVAL RECOMMENDED ____ Reg. No. ____
APPROVED ____ Date ____
MANAGER / CHIEF ENGINEER Reg. No. ____

CORROSION CONTROL
CATHODIC PROTECTION SYSTEMS
SACRIFICIAL & IMPRESSED CURRENT

CONTRACT NO.
DRAWING NO.
SCALE NO SCALE
SHEET NO. 3

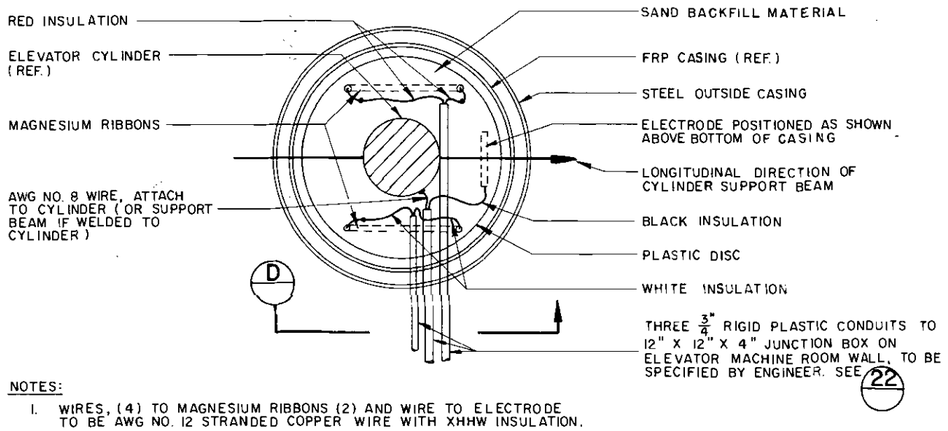

NOTES:

1. WIRES, (4) TO MAGNESIUM RIBBONS (2) AND WIRE TO ELECTRODE TO BE AWG NO. 12 STRANDED COPPER WIRE WITH XHHW INSULATION.
2. CONCRETE CLOSURE SURFACE TO SLOPE AWAY FROM CYLINDER.

DETAIL 21
ELEVATOR — PLAN VIEW

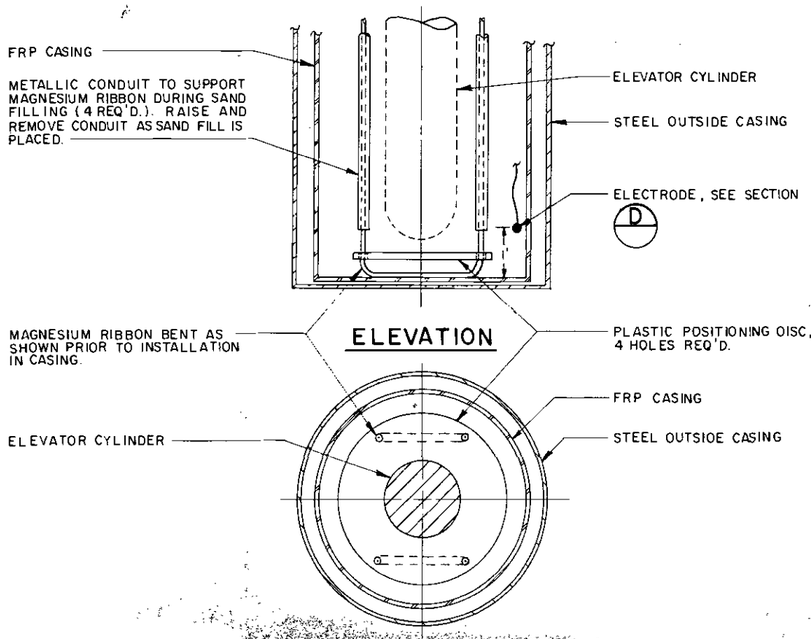

SECTION E
STRUT ASSEMBLY

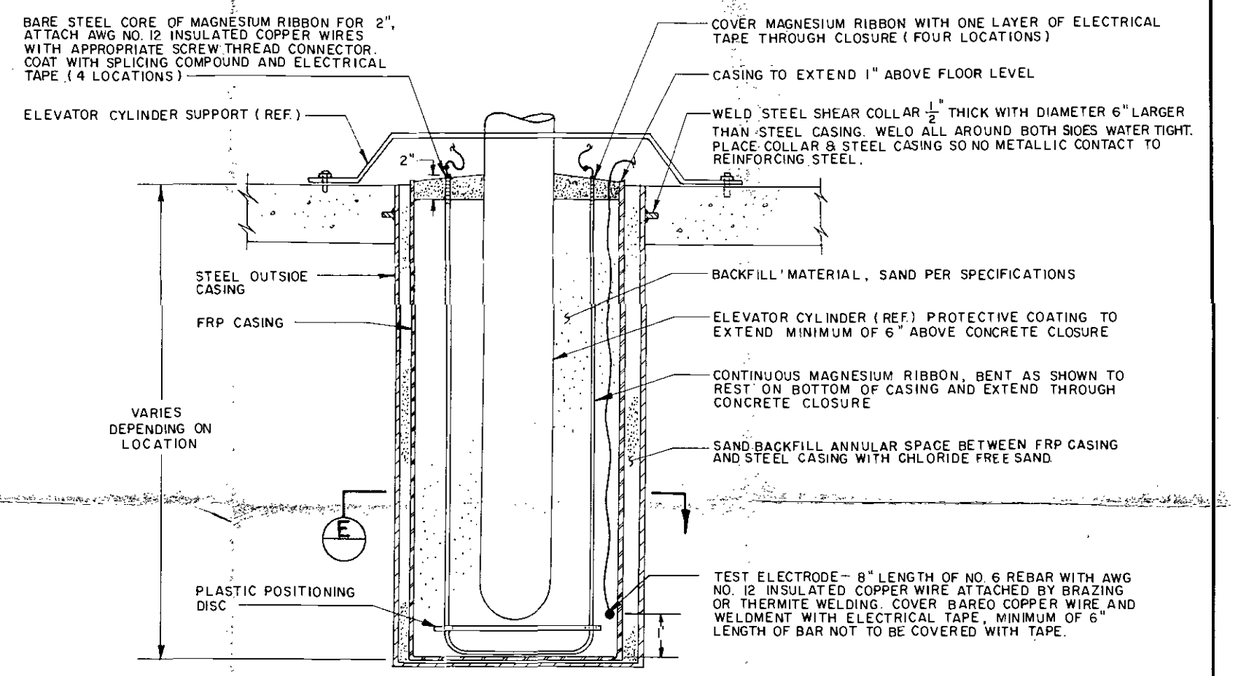

SECTION D
ELEVATION

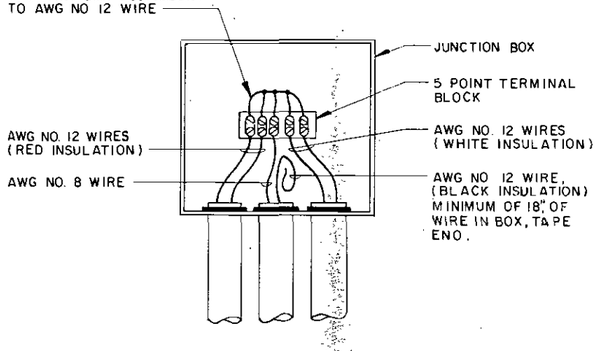

DETAIL 22
JUNCTION TEST BOX

REV.	DATE	BY	APP.	DESCRIPTION

DESIGNED BY R.C. SMITH Date 5-13-83
DRAWN BY K.C. KELLY Date 5-13-83
CHECKED BY D.M WATERS Date 6-9-83

REGISTERED PROFESSIONAL ENGINEER — DONALD M. WATERS — No. 372 — CORROSION — STATE OF CALIFORNIA

WATERS CONSULTANTS
PROFESSIONAL SERVICES GROUP, INC.
CORROSION ENGINEERS
7807 CONVOY COURT SAN DIEGO, CA. 92111
SUBMITTED BY
Donald M Waters
PROJECT MANAGER

SOUTHERN CALIFORNIA RAPID TRANSIT DISTRICT
METRO RAIL PROJECT
RTD

APPROVAL RECOMMENDED _____ Reg No. _____
APPROVED _____ Date _____
MANAGER / CHIEF ENGINEER Reg. No. _____

CORROSION CONTROL
HYDRAULIC ELEVATOR CYLINDER CATHODIC PROTECTION SYSTEM

CONTRACT NO.
DRAWING NO.
SCALE NO SCALE
SHEET NO. 4

BRUNING 44-139

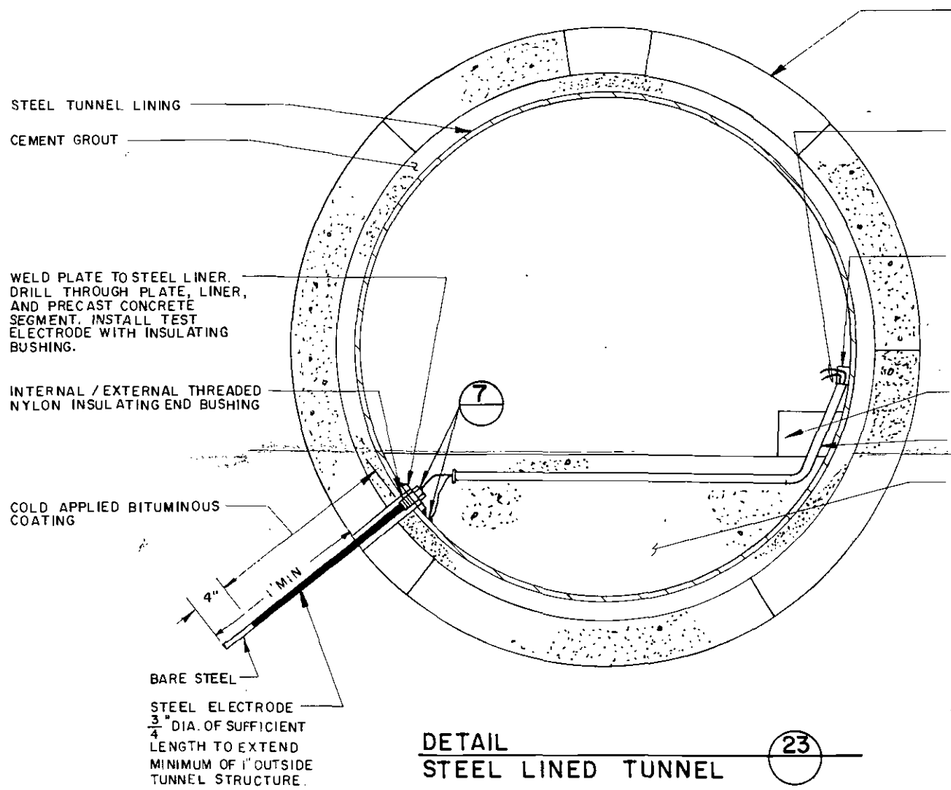

DETAIL
STEEL LINED TUNNEL (23)

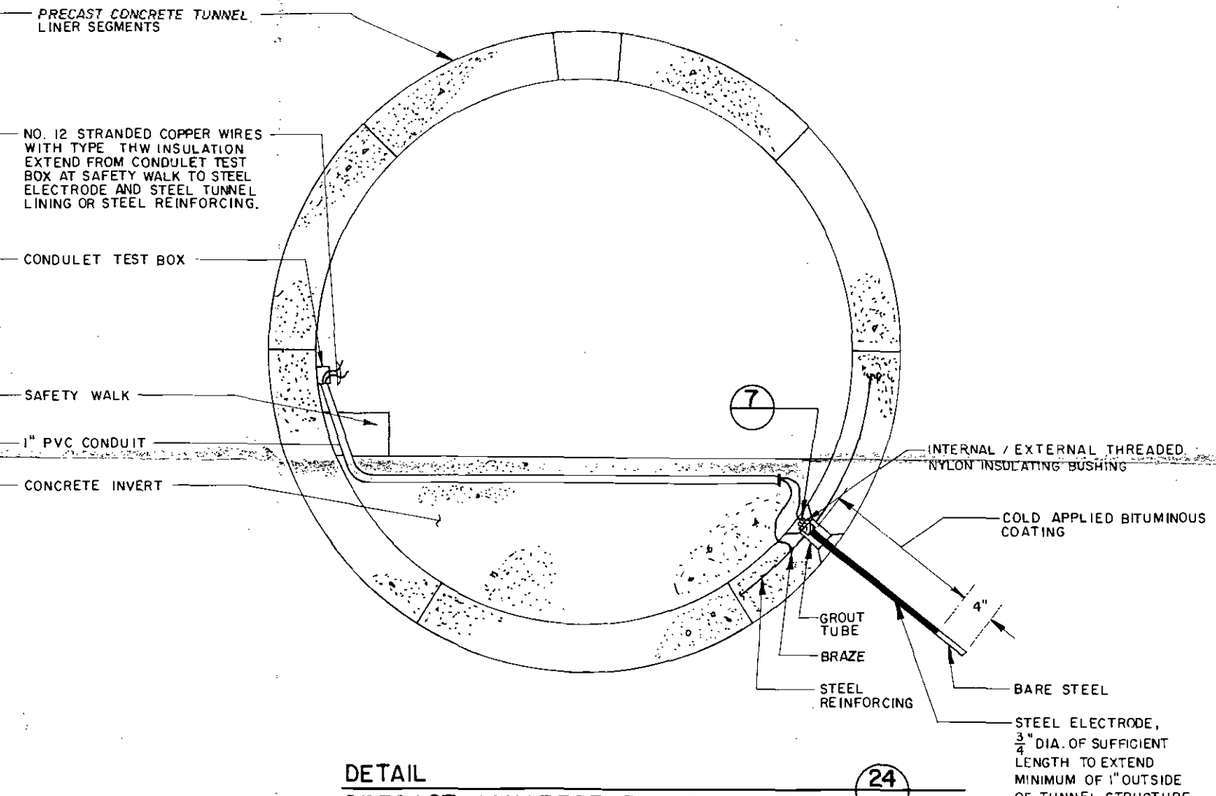

DETAIL
PRECAST CONCRETE TUNNEL LINER (24)

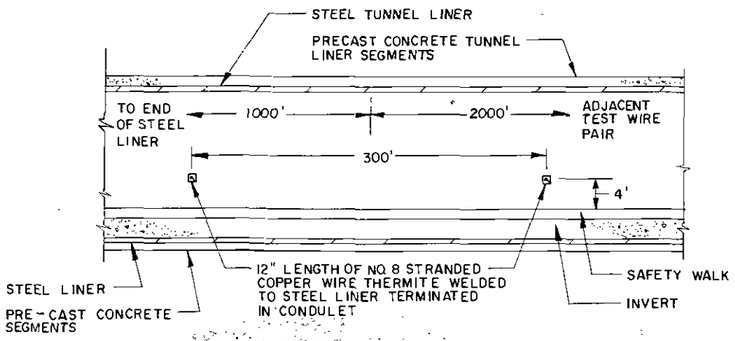

DETAIL
TYPICAL STRAY CURRENT MEASURING TEST FACILITY (25)

REV.	DATE	BY	APP.	DESCRIPTION

DESIGNED BY R.C. SMITH Date 5-13-83
DRAWN BY K.C. KELLY Date 5-13-83
CHECKED BY D.M. WATERS Date 6-9-83

REGISTERED PROFESSIONAL ENGINEER — No. 872 — CORROSION — STATE OF CALIFORNIA

WATERS CONSULTANTS
PROFESSIONAL SERVICES GROUP, INC
CORROSION ENGINEERS
7807 CONVOY COURT SAN DIEGO, CA. 92111
SUBMITTED BY
Donald M. Waters
PROJECT MANAGER

SOUTHERN CALIFORNIA RAPID TRANSIT DISTRICT
METRO RAIL PROJECT
RTD

APPROVAL RECOMMENDED _____ Reg. No. _____
APPROVED _____ Date _____
MANAGER / CHIEF ENGINEER Reg. No. _____

CORROSION CONTROL
TUNNEL STRUCTURE STRAY CURRENT MONITORING FACILITIES

CONTRACT NO.
DRAWING NO.
SCALE NO SCALE
SHEET NO. 5

BRUNING 44-135

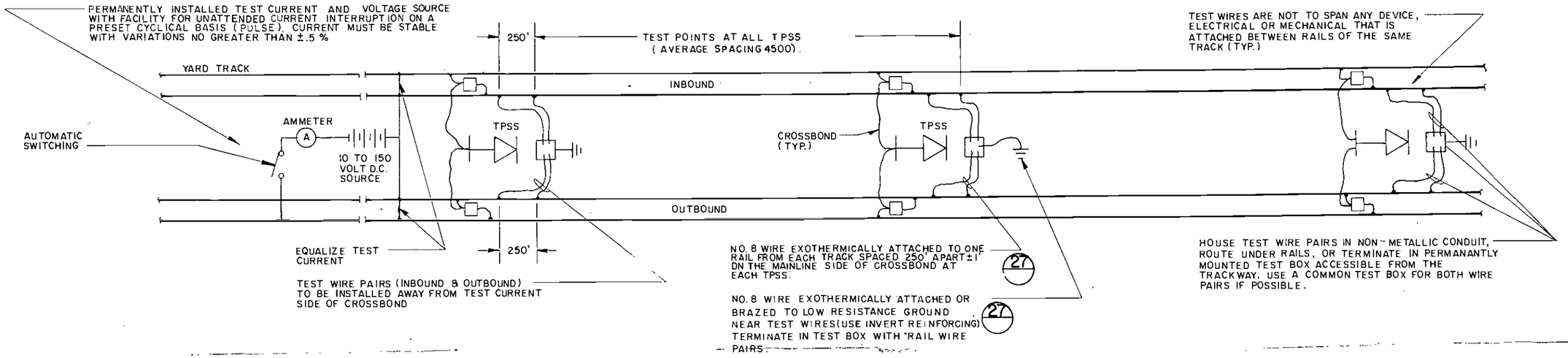

DETAIL 26
PLAN VIEW — SCHEMATIC

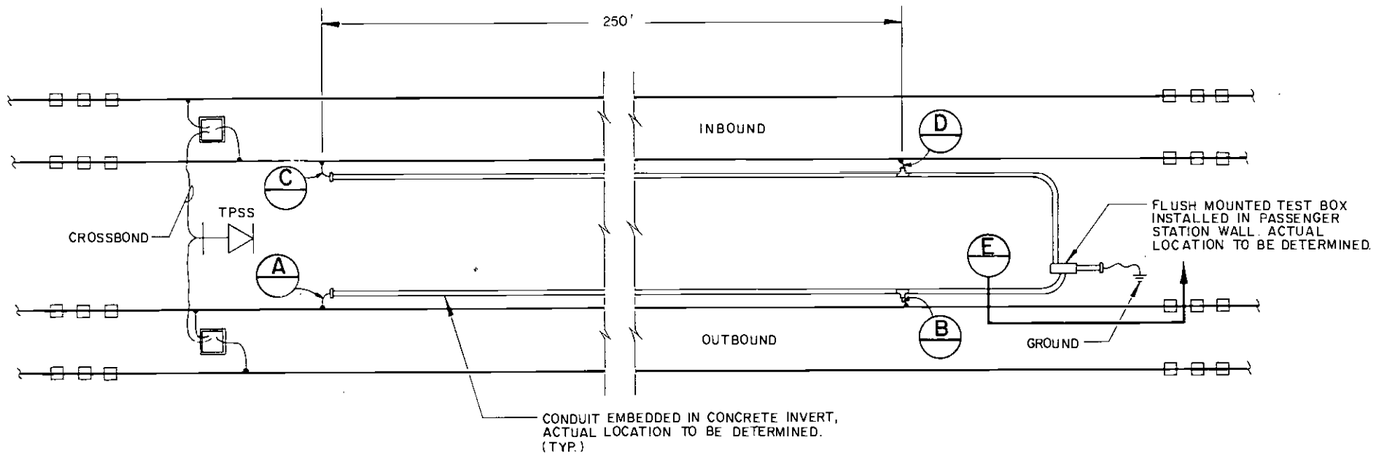

DETAIL 27

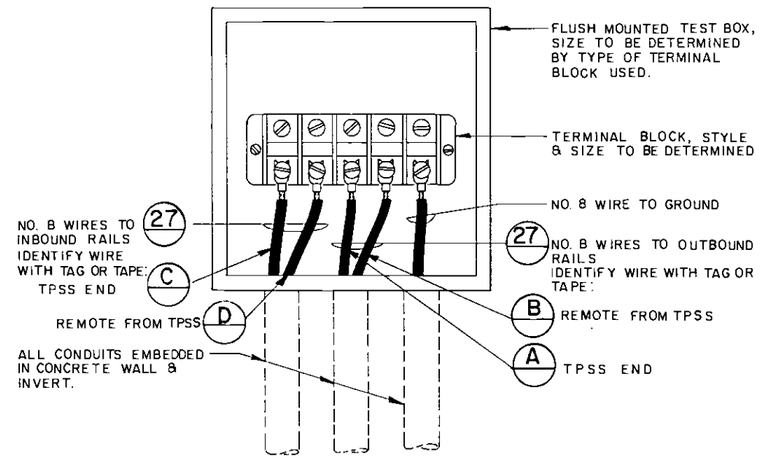

SECTION E

REV.	DATE	BY	APP.	DESCRIPTION

DESIGNED BY R.C. SMITH Date 5-13-83
DRAWN BY K.C. KELLY Date 5-13-83
CHECKED BY D.M. WATERS Date 6-9-83

WATERS CONSULTANTS
PROFESSIONAL SERVICES GROUP, INC.
CORROSION ENGINEERS
7807 CONVOY COURT SAN DIEGO, CA. 92111
SUBMITTED BY
Donald M. Waters
PROJECT MANAGER

SOUTHERN CALIFORNIA RAPID TRANSIT DISTRICT
METRO RAIL PROJECT
RTD
APPROVAL RECOMMENDED ____ Reg. No. ____
APPROVED ____ Date ____
MANAGER / CHIEF ENGINEER Reg. No. ____

CORROSION CONTROL
NEGATIVE SYSTEM RESISTANCE-TO-EARTH TEST FACILITIES

CONTRACT NO.
DRAWING NO.
SCALE NO SCALE
SHEET NO. 6

BRUNING 44 532