Southern California Rapid Transit District
METRO RAIL PROJECT

Final Report

Environmental Control System

August 23, 1985

Prepared by

Parsons Brinckerhoff Quade & Douglas, Inc.

New York, N. Y.

Prepared for

Metro Rail Transit Consultants

Los Angeles, California

28866596

The preparation of this document has been financed in part through a grant from the U.S. Department of Transportation, Urban Mass Transportation Administration, under the Urban Mass Transportation Act of 1964, as amended, the State of California, and the Los Angeles County Transportation Commission.

SOUTHERN CALIFORNIA RAPID TRANSIT DISTRICT

Metro Rail Starter Line

Final Report

Environmental Control System

August 23, 1985

Prepared by

Parsons Brinckerhoff Quade & Douglas, Inc.

New York, N.Y.

Prepared for

Metro Rail Transit Consultants

Los Angeles, California

TABLE OF CONTENTS

LIST OF TABLES

LIST OF FIGURES

SOUTHERN CALIFORNIA RAPID TRANSIT DISTRICT

MAY 1985

RTD

METRO RAIL PROJECT

PROJECT UNIT INDEX

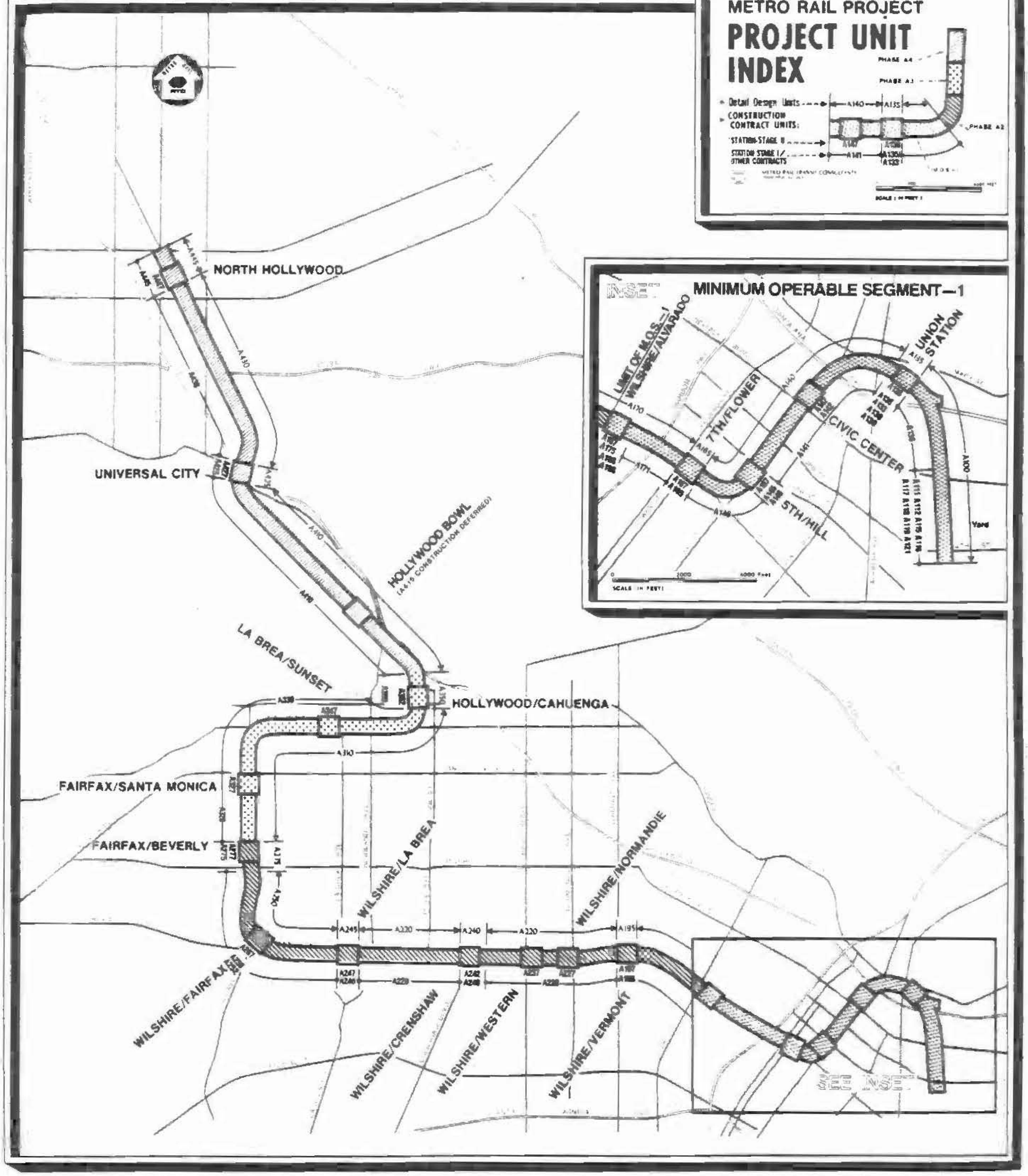

1.0 INTRODUCTION

The work described herein relates to the final design analyses of the Environmental Control System (ECS) for the stations and adjacent tunnels which comprise the 18.6 mile long Metro Rail Starter Line.

1.1 Scope

The design of the ECS has evolved from conceptual to final design of the MOS-1 segment with modifications being made, as required, to account for changes in system elements.

Since completion of the preliminary design, changes have occurred which effect results of analyses and simulations. These include changes in train speed and frequency, in the number of stations, station location, station configuration, tunnel blockage ratio, tunnel liner type and provision for staged construction, starting with MOS-1 comprised of the first five (5) stations only. Therefore, the subject of this study was:

- To verify the adequacy of the ECS, as originally conceived and incorporated in the design, to satisfy project Criteria.
- To refine the system loads, (i.e., fan capacities and station ventilation and cooling requirements).

- ✓ To find ways to optimize the utilization of a given ventilation system by applying it to serve a multiple purpose; for example, using the station underplatform exhaust (UPE) system for heat removal, for emergency ventilation and for tunnel methane purging.

- To quantify the effects of initially constructing vs. deferring two proposed stations (Wilshire/Crenshaw and Hollywood Bowl) and certain system elements such as the supply air system.

- To verify system capability of eliminating the mid-tunnel ventilation shaft between Wilshire/Crenshaw and Wilshire/La Brea stations.

The main objectives of the analyses performed and described herein were to refine system capacities and check the ECS performance against criteria. Therefore, the ECS concept previously developed has been taken as given input, including: the capacities of the station supply air and underplatform exhaust systems; the number and location of mid-tunnel and emergency ventilation shafts; and the number of fans per ventilation shaft. In addition, alternative ventilation concepts have been considered for the purpose of effecting construction cost reductions.

Also, the effect of phasing of construction, which may temporarily impair the effectiveness of the ECS in the vicinity of the interim subway termination points, has been assessed with the Subway Environment Simulation (SES) computer program. Station ventilation and cooling requirements, and station temperatures for MOS-1 stations have been re-evaluated based on reduced average headways of 4½ minutes initially and 3 minutes ultimately. Resultant loads and temperatures for all other stations on the Starter Line, as presented herein are still based on the original headways of 3½ and 2 minutes, respectively. However, it can be expected that these loads will decrease proportionately to the reduction in train frequency.

1.2 Purpose

This report summarizes results of the latest Subway Environment Simulation (SES) analyses performed to refine the ventilation and cooling requirements and fan capacities. Load estimates during preliminary design by application of the SES computer program were reported in the ECS Preliminary Design Report, dated May 6, 1983 (Reference 1), the Final ECS Report dated June 15, 1984 (Reference 16) which is superseded by this report, and are further described in References 2 through 5.

The conclusions reached in this report are in general agreement with the cited references. However, where differences occur (e.g., station temperatures and station cooling requirements), the information contained in this report will govern.

1.3 Background

During the preliminary design, the cooling requirements for sixteen (16) stations had been estimated by extrapolating loads from limited analyses for typical stations and their adjacent tunnels.

This approach was deemed appropriate for cost-estimating and space-proofing purposes. However, for the final design process (including the selection of refrigeration equipment), the preliminary estimates had to be refined to reflect changes in station geometry, blockage ratio, profile and alignment, and station spacing.

Changes in system configuration and proposed operating schedule of the Starter Line since completion of the preliminary analyses in May 1983, and again after submittal of the Final ECS Report in June 1984 included the following:

a. The blockage ratio (train frontal area divided by tunnel cross-section area) increased from 0.464 to 0.527.

b. The length of station cut-and-cover sections was curtailed for about two-thirds of the stations, to reduce construction costs. The cut-back in length was effected by relocating certain mechanical and electrical equipment rooms from the platform to the mezzanine level.

c. Relocation of equipment rooms to the mezzanine levels, created a more confined space at the platform level, which, in turn, affects air velocities and pressure transients.

d. Near Wilshire/Fairfax station profile and alignment were revised to accommodate a future extension along Wilshire Boulevard. This Y-branch was accommodated with an "over/under" track section at the junction.

e. Provisions were made for adding two (2) stations, Wilshire/Crenshaw and Hollywood Bowl.

f. Wilshire/Fairfax station was shifted further west and a mid-tunnel ventilation shaft, originally proposed between Wilshire/Fairfax and Fairfax/Beverly stations, was eliminated.

g. Installation of the supply air distribution ductwork over the length of the platform in stations has been deferred until mechanical cooling is installed.

h. Average headways in the peak hour have increased from 3½ to 4½ minutes initially and from 2 to 3 minutes ultimately.

i. Due to funding limitations, construction of the Starter Line will be staged. The first section, MOS-1, will be comprised of only five stations, with a temporary sub-surface terminus at Wilshire/Alvarado station.

Check design to confirm (seems contrad.?)
to cool load rational

j. Ceiling Smoke exhaust system capacities in 4 of 5 MOS-1 stations have increased from 60,000 cfm to as much as 186,000 cfm. ?

k. Segmented steel liners will be used in tunnel construction between Wilshire/Crenshaw and Fairfax/Santa Monica stations. This will increase resistance to air flow and adversely affect ventilation air flow rates. ? check design

l. Elimination of the mid-tunnel ventilation shaft between Wilshire/Crenshaw and Wilshire/La Brea is being considered.

Results of the latest SES analyses presented and discussed herein, and consideration of safety-related factors affecting ventilation concept decisions, reflect these and other changes in the configuration of the Metro Rail Starter Line.

2.0 BASIS OF DESIGN

2.1 Temperature Criteria

1.	Outdoor dry bulb at 5:00 p.m. based on 5 percent frequency of occurrence	84°F
2.	Station (train room)	
o	With ventilation only	89°F
o	With mechanical cooling	85°Fdb/65% R.H.

2.2 Station Environmental Control Systems (ECS)

2.2.1 Supply Air System

Analyses of effectiveness of the supply air system have been carried out to simulate several system configurations and operating modes as follows:

A. Ventilation Mode

(1) & (2) Contradict each other !

✓ 1. 150,000 cfm of outside air supplied from four (4) units of 37,500 cfm capacity each to every station.

✓ 2. No supply air system provided (installation deferred until mechanical cooling is required), except that outside air will be drawn into the station by trains' piston action and/or by negative pressure generated from operation of station underplatform exhaust (UPE).

B. Cooling Mode

150,000 cfm of outside air supplied from four (4) units of 37,500 cfm each, distributed uniformly along each edge of every station platform. The need for cooling by mechanical refrigeration is not foreseen until warranted by increased traffic density of 3-minute average headway. At that time the supply air system configuration will be comprised of factory-fabricated units equipped with filters and cooling coils, which will be provided with chilled water from local refrigeration plants in each station.

2.2.2 Underplatform Exhaust System (UPE)

Each station will have two 64,000-cfm underplatform exhaust systems, one per track. Thus, total UPE capacity will be 128,000 cfm per station. One fan will be dedicated to each track. Therefore, each trackway can be ventilated independently.

Statement doesn't concur w/ the actual design (ex.) ?

Air flow in each UPE duct will be in the normal direction of train travel on the adjacent trackway. This convention will provide uniformity in UPE system design and operation for all stations.

During peak operating periods, coincident with peak outdoor temperatures, UPE systems will exhaust hot air from underneath the trains while they approach, leave or dwell in the station. Synchronization of exhaust air flows with train operation will be effected with blade pitch control responding to

✓ thermal protection devices may have to be deleted from UPE fans since they are used also as Emergency fan. Check ~~check~~ Specs, etc.

track signals. In an emergency, the same fans would capture smoke from underneath a train while patrons are disembarking, or will supplement the effect of tunnel ventilation systems as required.

The UPE systems may also be operated, independently or in conjunction with station smoke exhaust systems at the mezzanine ceiling, during periods of scheduled or unscheduled shut-down of train operations to purge small quantities of methane gas from stations and tunnels. ✓ this means these fans may operate during night-hours. Sound attenuators, therefore, may be req'd. to damper noise, especially @ these fans in residential areas.

2.2.3 Smoke Exhaust System

At the mezzanine ceiling, each station will have two (2) smoke exhaust systems, one at each end.

System capacity will be based on 5 cfm/sq ft of projected mezzanine ceiling area (roof area less non-public area). Is this per Code req't.? - CRITERIA

✓ This system is primarily provided to expel smoke from a station after a fire. However, it may also be operated in conjunction with the UPE systems for methane purging as described above.

✓ what do local codes have to say about multi-functions of these units?

2.3 Tunnel Ventilation Systems

2.3.1 Emergency Fans

Adjacent to each station, a minimum of two (2) emergency fans will be provided at each station end.

Where there are crossovers adjacent to a station, the emergency fans will be located at the far end of the crossover, and three (3) in lieu of two fans will be housed in a common ventilation structure.

Each fan will have a capacity of 150,00 cfm except those in shafts adjacent to Union, Civic Center and North Hollywood stations, which will have 185,000 cfm capacity.

Fans will operate only in an emergency. However bypasses around the fans will convey air exchange between tunnels and the surface, thus relieving high pressures and temperatures.

2.3.2 Mid-Tunnel Ventilation Shafts

In each of three (3) locations, mid-tunnel shafts will be provided with three (3) fans of 150,000 cfm capacity each. Two will be located between Hollywood/Cahuenga and Universal City and the third which is being considered for elimination will be between Wilshire/Crenshaw and Wilshire/LaBrea. One additional mid-tunnel ventilation shaft with three (3) fans of 185,000 cfm capacity each will be located between Universal City and North Hollywood stations.

During normal train operations, the primary function of these shafts is to expel heat from long tunnels. The fans at these shafts can be operated at any time when deemed necessary. However, the maximum benefit can be achieved by operating these fans during non-revenue periods when the cooler outdoor temperatures will be most effective in restoring the tunnels' "heat sink" capacity.

Consideration of emergency operating conditions is significant in determining the need for mid-tunnel vent shafts. Foremost in such an assessment must be the recognition that an emergency ventilation system is but one sub-system of many complex, interacting and interdependent subsystems which collectively establish the overall level of life safety that can be achieved. Some of the other subsystems and factors which must be considered include the fire heat release rate, tunnel blockage ratio, locations and spacing of cross passages, length of ventilation zones, number of trains per ventilation zone, and train movement within the tunnel as discussed in Section 3.2.1 of this report.

In an emergency, fans in mid-tunnel shafts supplement the effectiveness of emergency fans. Moreover all mid-tunnel shafts will be equipped with three (3) fans (as described above), so that two (2) fans can be used to exhaust (or supply fresh air to) a smoke-filled trainway and the third can supply (or pressurize) the adjacent trainway which serves as a place of refuge for passengers being evacuated from a disabled train in the involved trainway.

The use of mid-tunnel vent shafts in the long tunnels reduces the lengths and increases the number of ventilation zones. This, in turn, reduces the possibility of a second train being caught in the same zone. Should two (2) trains be in the same ventilation zone in an emergency, the effectiveness of the ventilation in that zone would be substantially reduced. To offset this negative effect, the second train would have to be backed out. However, this could also adversely increase the required evacuation time.

2.4 Input Parameters

2.4.1 System Geometry

The analyses described in this report are based on final design documents (i.e., at the level of completion reflected as of February 1895) for the MOS-1 phase and based on the preliminary design for the remaining segments of the Metro Rail Starter Line. Revisions to the MOS-1 system geometry, reflected in the latest analyses, include the following:

- The station entranceway geometry and air flow impedance characteristics for the five (5) stations have been revised per the latest contract drawings as of February 1985.

- The geometry at 7th/Flower has been revised to reflect the latest station configuration which has a full mezzanine rather than the two end mezzanines shown on preliminary drawings.

- The configuration of the tunnels east of Union Station has been updated per the latest Contract A-130 drawings.

- The system network has been revised to model Wilshire/ Alvarado as a terminal station for both emergency ventilation and methane purging analyses. However, normal operations simulations assume that the system has been extended beyond Wilshire/Alvarado as discussed in Section 3.1.

- The dimensions and air flow impedance of the tunnel segments between the ventilation shafts and the ends of each station have been updated per the latest station contract drawings as of February 1985.

2.4.2 Train Operations

furnish copies of printouts for review

The Subway Environment Simulation (SES) computer program has been used to model train operations throughout the Starter Line. This computer program is a comprehensive tool, permitting the user to simulate air flows in any given network of interconnected tunnels, stations and ventilation shafts; various systems of environmental control (including forced air ventilation, station air conditioning, and underplatform exhaust); any desired sequence of train operation (including different operating characteristics and schedules); a variety of train braking and propulsion systems; various heat sources; and emergency situations with trains stopped in tunnels and with air flow controlled by fan operation.

For analyses of the MOS-1 segment, the train headway, station dwell times, and train speed-time profile have been revised. These changes are likely to cause a significant reduction in the station cooling requirements. These parameters have been updated as follows:

- Train Headway: The total quantity of train heat generated in a subway system is directly proportional to the frequency of train operation. Therefore, during shorter headway periods, when trains operate more frequently, more train heat will be liberated. Per Design Directive DD-002, the minimum operating headways are 3½ minutes for Design Year (DY) operation and 2½ minutes for the Long-Range Design Standard (LRDS). These minimum headways are expected to occur only for the peak 15 minutes within the peak hour.

?

This had been used (in 1984) calcs, also

  Headways of 4½ (A.M. peak) and 5 minutes (P.M. peak) are planned for the remainder of the peak hour during Design Year operations. However, these short-duration peaks are not considered an appropriate basis for designing the Environmental Control System (ECS) for a subway. The large quantities of air moved through a subway system by the piston-action of trains, and the considerable mass of the tunnel and station structures produce a "flywheel" effect tending to resist changes in subway air temperatures. A more appropriate approach is to use an average train headway occurring over a minimum period of one (1) hour. Therefore, average headways of 4½ minutes and 3 minutes, corresponding to 13 and 20 trains per hour respectively, have been used as a basis for predicting piston effect, air temperatures, ventilation loads and cooling loads for the MOS-1 stations.

- Station Dwell Times: Dwell time affects the quantity of train heat dissipated in a station. More heat will be released in a station during longer dwell times. Station dwell times were revised per Table 2-1 of the Preliminary Engineering Operating Plan, dated November 1983. The following values have been used:

Station	Previous Dwell Time (sec.)	Revised Dwell Time (sec.)
Union	180	180 (terminal station)
Civic Center	30	25
Fifth/Hill	30	35
Seventh/Flower	30	35
Wilshire/Alvarado	30*	35*

*Assumes system has been extended beyond MOS-1 limits.

- Speed-time Profile: Train performance data for the SES program has been revised to duplicate the train speed-time profile predicted by the RTS model (print-out provided by MRTC) for train operation at Performance Level 1 (full performance). Since train heat gain varies as the square of train velocity, a 10 percent reduction in peak velocity during travel between stations, for example, would result in a 19 percent reduction in heat gain, (i.e., $1.0-0.9^2=0.19$).

2.4.3 Vehicle Combustible Load

The distribution of the vehicle combustible load has been revised per Reference 17. The total heat load, however, has remained the same (i.e., 60 million Btu per vehicle). The result of this revision is that the peak heat release rate during the first 60 minutes of a fire will increase from 83.8 to 85.3 million Btu per hour or about 2 percent, because of the increase in the interior heat load above the vehicle floor. This increase will have a negligible effect on the emergency ventilation requirements.

3.0 ANALYSES AND RESULTS

3.1 Normal Operations

Station air temperatures and station cooling requirements have been predicted by applying the SES computer program. The entire Starter Line, including eighteen (18) stations and their contiguous tunnels, had been modeled in 1984. Since then, the MOS-1 segment of the Starter Line has been reevaluated to account for reduced average train frequency and revised system geometry as described on Section 2.4, Input Parameters.

However, normal operation in the remainder of the Starter Line has not been reassessed. Therefore, results discussed herein have to be interpreted with the recognition that air velocities, air temperatures, ventilation requirements and cooling loads for segments other than MOS-1 will experience similar reductions, mainly as a result of reduced traffic density.

The simulations examining MOS-1 stations assume that the subway system has been extended beyond Wilshire/Alvarado. The area modeled extends from the portals east of Union Station through Wilshire/Normandie. Thus, the air temperatures and cooling requirements predicted will be the highest expected at each station because the level of train service during MOS-1 (i.e., the shortest scheduled headway is 5 minutes during the peak hour with 4-car trains) will be substantially less than when the subway system is extended.

The period simulated corresponds to a summer evening rush hour in all cases. Consistent with current design criteria, an outdoor temperature of 84°F has been used as a basis of design.

The simulations modeling Design Year (DY) operations assume that during the entire peak hour trains operate on 3½-minute headways, (except an average peak hour of 4½-minutes for MOS-1, see paragraph 2.4.2), and that none of the stations are air-conditioned. The output of these simulations includes the instantaneous and average air temperatures and velocities in the stations, tunnels and ventilation shafts throughout the Starter Line.

furnish these to RTD

The simulations modeling Long Range Design Standard (LRDS) operations assume that during the entire peak hour trains operate on 2-minute headways, (except an average peak hour of 3-minute headways in MOS-1) and that all the stations are air-conditioned. A station design point of 85°F and 65 percent R.H. has been used, consistent with current design criteria. In addition to air temperatures and velocities, these simulations also predict the cooling required at each station to maintain the above design point.

The UPE system (128,000 cfm) has been operated in all the stations during each simulation. This system has been assumed to capture 65 percent of the sensible heat generated by a six-car train. This means that 65 percent of the heat released beneath the floor of the train (i.e., propulsion, braking, air conditioning, and some auxiliaries) is captured while the train is entering, dwelling, or departing from a station. The heated air which is captured by the UPE system is discharged to the outside.

The station supply air system delivering 150,000 cfm of outside air was also operated at each station with the exception of the simulations performed to examine the impact of deferring its installation.

In the tunnels with mid-tunnel shafts, the fans have not been operated during the simulations. However, the bypass dampers in all the ventilation shafts (emergency and mid-tunnel) were open to promote an exchange of tunnel and outside air.

3.1.1 Design Year (DY) Operations

3.1.1.1 Station Temperatures - The predicted station air temperatures with and without supply air system operation are shown in Table 3.1.A for MOS-1 stations and in Table 3.1.B for all others. The air temperatures tabulated represent average temperatures occurring over the length of the platform.

MOS-1 station temperatures (based on 3-minute average headway) vary between 85°F and 88°F with the supply air system and between 86°F and 90°F without the supply air system. Thus, it can be seen that the station environment does not benefit significantly from the provision of supply air without mechanical cooling. On the average, the benefit is roughly a 1°F cooler station temperature. On the other hand, temperature criteria are met in virtually all MOS-1 stations, except Union Station where it is exceeded by only 1°F, which is well within the degree of accuracy of simulation results.

Differ from T
earlier claim!

TABLE 3.1.A

PREDICTED TEMPERATURES
IN MOS-1 STATIONS
DURING DESIGN YEAR OPERATIONS
(4½-Minute Headway)

Station	Average Platform Air Temperature (°F) With Supply Air	Average Platform Air Temperature (°F) Without Supply Air
Union	88	90
Civic Center	85	86
Fifth/Hill	87	88
7th/Flower	88	89
Wilshire/Alvarado	87	89

Why is this temp so different from previous result?

TABLE 3.1.B

PREDICTED TEMPERATURES
OUTSIDE MOS-1
DURING DESIGN YEAR OPERATIONS

(3-½ Minute Headway)

Station	Average Platform Air Temperature (°F) With Supply Air	Average Platform Air Temperature (°F) Without Supply Air
Wilshire/Vermont	88	88
Wilshire/Normandie	88	90
Wilshire/Western	87	*
Wilshire/Crenshaw	88	*
Wilshire/La Brea	88	*
Wilshire/Fairfax	87	*
Fairfax/Beverly	87	*
Fairfax/S. Monica	89	91
La Brea/Sunset	88	92
Hollywood/Cahuenga	90	91
Hollywood Bowl	86	86
Universal City	84	85
North Hollywood	87	90

?

*(These stations were not simulated.) Why?

which ones?

Other station temperatures, outside MOS-1, show a similar trend. With supply air, the results show that the air temperature can be kept at or below 89°F when the outdoor temperature is 84°F, except in Hollywood/Cahuenga station, where the air temperature will reach 90°F. Without supply air, the predicted air temperatures exceed the 89°F criterion in 5 of the 8 stations examined. In these 5 stations, the air temperatures are in the range of 90°F to 92°F. However, it is a safe assumption that those stations will experience a reduction in temperature similar to those in MOS-1, as a result of reduced average traffic density.

3.1.2 Long Range Design Standard (LRDS) Operations

3.1.2.1 Station Cooling Loads - Predicted cooling requirements, to maintain stations at 85°F at a time when the outside air temperature is 84°F, are shown in Table 3.2.A for MOS-1 stations and in Table 3.2.B for all other Starter Line stations. Table 3.2.B also shows the effect on station temperatures if no station cooling system were to be provided even after the headway reaches 2 minutes.

MOS-1 cooling loads vary between 95 and 175 tons of refrigeration, and the average for the five (5) stations is 146 tons each. The difference in cooling requirements from station to station results primarily from the variation in the quantity of tunnel heat infiltrating each station. This component of the total station heat load is sensitive to the relative positioning of trains on the opposing trackways. During an SES simulation, the phasing of trains is kept constant. Thus, if two opposing trains arrive at a station simultaneously during one headway, they will continue to arrive

TABLE 3.2.A

RESULTS OF SES COMPUTER ANALYSES
MOS-1 STATION COOLING LOADS
(3-Minute Headway)

Station		Cooling Load (Tons of Refrigeration) SES Output	1984	or.	Equalized Load/Station
Union		150	180	350	146
Civic Center	S.L. & J.B.	95	180	275	146
5th/Hill		175	200	300	146
7th/Flower	Ram D.L.	170	325	325	146
Wil./Alvarado	Ram	140	275	325	146
Total for MOS-1:		730			730
Average for MOS-1:		146 each			146 each

Why are the changes so drastic?

TABLE 3.2.B

RESULTS OF SES COMPUTER ANALYSES
OTHER STATION COOLING LOADS
(2- Minute Headway)

Station	Average Platform Temperature (°F) Without Cooling	1984 -	Cooling Load (Tons Refrigeration) or
Wilshire/Vermont	100	275	250
Wilshire/Normandie	95	250	225
Wilshire/Western	*		175
Wilshire/Crenshaw	*		200
Wilshire/La Brea	*		325
Wilshire/Fairfax	*		300
Fairfax/Beverly	*		225
Fairfax/S. Monica	100		425
La Brea/Sunset	104		350
Hollywood/Cahuenga	96		350
Hollywood Bowl	93		---
Universal City	92		350
North Hollywood	99		180
Total for 12 Stations:			3,355
Average for 12 Stations:			280 each

*(These stations were not simulated.)

simultaneously during each succeeding headway. If the train positioning were changed, loads would shift from one station to an adjacent station. However, the total load for all stations would remain constant. This supports a design approach that uses an average cooling load (i.e., 146 tons of refrigeration in each of (5) MOS-1 stations) rather than using the individual loads predicted for each station.

Other station cooling loads, outside MOS-1, are based on 2-minute headway and vary between 175 and 425 tons of refrigeration. The average load is 280 tons per station. With 3-minute headways, it may be assumed that cooling loads will drop proportionately. Therefore, it can be expected that the 280-ton load in each station will reduce to 187 tons each (2/3 x 280).

3.1.2.2 Station Temperatures Without Cooling - The impact of possibly deleting the supply air systems altogether, had been assessed by simulating train operation with 2-minute headway. Results are presented in Table 3.2.B. During peak train operations, the station temperature would range from 92° to 104°F along the station platforms if the supply air system is not installed. With 3-minute headways, the average platform air temperatures will probably not be more than 1° to 2°F higher than those with 3½-minute headways, shown in Table 3.1.B.

3.1.2.3 Impact of Station Spacing - The addition of Wilshire/Crenshaw station has the effect of reducing the cooling requirements of the adjacent stations as shown on Table 3.3. It can be seen that the cooling requirements with a 2-minute headway at Wilshire/Western and Wilshire/La Brea decrease by 75 tons and 110 tons, respectively. The 185-ton decrease in these two (2) stations is nearly equal to the cooling requirement for Wilshire/Crenshaw (i.e., 200 tons). This shows that the addition of a station results in a redistribution of cooling requirements between the added and the adjacent stations. The effect of providing for the addition of Hollywood Bowl station is also reflected in Table 3.3 and shows a similar trend.

3.1.2.4 Benefit of Mid-Tunnel Shaft at Sta. 434+85 - The effect of a mid-tunnel shaft on the cooling requirements of the adjacent stations is shown on Table 3.4.

The results show that with a 2-minute headway the mid-tunnel shaft located at Sta. 434+85 would produce a 22 percent reduction in cooling load, or 50 and 100 tons of refrigeration at Wilshire/Crenshaw and Wilshire/La Brea, respectively. With a 3-minute headway, the reduction would be even less; perhaps a total saving of 100 to 125 tons.

The cooling effect of a mid-tunnel shaft, when the fan is not operating, results from an exchange of tunnel air with outside air. As a train approaches the shaft, some of the warmer tunnel air, which would otherwise infiltrate the downstream station, is discharged through the shaft. Likewise, as the train moves away from the shaft, the suction produced in the wake of the train will draw cooler outside air in through the shaft. The net effect of this air exchange is a reduction of heat flow into the adjacent stations. Continuous ventilation through such a shaft by operating the mid-tunnel fan(s), generally increases the quantity of heat removed from the tunnel. However, the relatively small reduction in station cooling load effected by the mid-tunnel shaft at this location does not justify its high cost, unless

TABLE 3.3

IMPACT OF STATION SPACING
(2-Minute Headway)

Station	Cooling Load (Tons Refrigeration) 2 Stations Added	Cooling Load (Tons Refrigeration) No Additions
Wilshire/Western	175	250
Wilshire/Crenshaw	200	---
Wilshire/La Brea	325	435
Hollywood/Cahuenga	300	350
Hollywood Bowl	200	---
Universal City	250	350

TABLE 3.4

IMPACT OF DELETING MID-TUNNEL SHAFT AT STA. 434+85
(2-Minute Headway)

Between Crenshaw & La Brea

Station	Cooling Load (Tons Refrigeration) With Shaft	Cooling Load (Tons Refrigeration) Without Shaft
Wilshire/Crenshaw	200	250
Wilshire/La Brea	325	425

the shaft is required for other than normal train operating conditions. Its effectiveness in methane purging, as discussed elsewhere in this report, cannot be ignored.

3.1.2.5 Benefit of 2 vs. 1 Mid-Tunnel Shaft in Long Tunnels - The length of the tunnels between the emergency shafts near Hollywood/Cahuenga and Universal City is about 16,500 feet, if Hollywood Bowl Station is not constructed. Accordingly, two mid-tunnel shafts are provided at approximately the third-points of the tunnels.

The effect of 2 vs. 1 mid-tunnel shaft on the station cooling requirements has been examined by performing two SES simulations which model ultimate train operations with 2-minute headways. In the case of a single mid-tunnel shaft, it was assumed to be located at the mid-point of the tunnels. The results are shown below:

Station	Station Cooling Load (Tons of Refrigeration) With 1 Shaft	Station Cooling Load (Tons of Refrigeration) With 2 Shafts
Hollywood/Cahuenga	375	350
Universal City	625	350

The results clearly show the benefit of providing two mid-tunnel shafts would reduce the station cooling requirements by 275 and 25 tons at Universal City and Hollywood/Cahuenga, respectively.

The difference in required cooling can be directly attributed to the reduction in the quantity of tunnel heat entering the stations. At Universal City Station, a 47-percent reduction is predicted. The additional shaft allows more of the hot tunnel air transported by train piston-action to escape to the atmosphere before it impacts on the station.

The smaller cooling load reduction predicted for Hollywood/Cahuenga (25 tons) can be attributed to the pocket track which tends to act as a "buffer" between the long approach tunnels and the station. The large open area at the pocket track allows the heated tunnel air approaching Hollywood/Cahuenga to turn and be drawn by outbound trains into the opposing trackway. Thus, the heat load at Hollywood/Cahuenga is reduced at the expense of Universal City.

Although the reduction in cooling loads with two mid-tunnel shafts are as indicated above, such resultant cost benefits - of and by themselves - would not be sufficient to justify two shafts in lieu of one. However, as discussed under Section 3.2 two mid-tunnel shafts are recommended due to emergency considerations, discussed elsewhere in this report.

3.1.3 Air Velocities

3.1.3.1 Station Platform Air Velocities - The predicted air velocities experienced at station platforms, as a train approaches a station, are shown in Table 3.5.A for MOS-1 stations and in Table 3.5.B for all other stations. Peak and average values are tabulated for each end of a station platform, and for varying headways. These air velocities occur at a point approximately 100 feet into the station. At that point, it is estimated that the initial "jet" velocity at the incoming tunnel will have been reduced by about 50 percent as the air jet expands.

TABLE 3.5.A

PREDICTED PLATFORM AIR VELOCITIES (FPM) FOR MOS-1 STATIONS

Station	Inbound End Peak	Inbound End Average	Outbound End Peak	Outbound End Average
Union	860	260	860	265
Civic Center	870	430	830	320
5th/Hill	1000	340	720	280
7th/Flower	600	270	990	460
Wilshsire/Alvarado	790	250	780	350

Air Velocity Criteria:

(i) Peak: 1000 fpm
(ii) Average: 600 fpm

TABLE 3.5.B

PREDICTED PLATFORM AIR VELOCITIES (FPM)
OUTSIDE MOS-1

	Inbound End				Outbound End			
	Peak		Average		Peak		Average	
Station	3-½ Min. Headway	2-Min. Headway	3-½-Min. Headway	2-Min. Headway	3-½ Min. Headway	2-Min. Headway	3-½-Min. Headway	2-Min. Headway
Wil./Vermont	1,300	1,440	560	750	1,320	1,380	500	580
Wil./Normandie	1,290	1,230	460	550	1,330	1,150	420	550
Wil./Western	1,390	1,400	410	570	1,390	1,330	430	630
Wil./Crenshaw	960	930	200	320	1,350	1,310	500	680
Wil./La Brea	1,340	1,400	540	740	1,340	1,400	540	690
Wil./Fairfax	600	1,100	430	570	1,360	1,240	440	580
Fairfax/Beverly	1,000	1,000	330	500	1,480	1,200	550	730
Fairfax/S. Monica	1,230	1,360	560	740	1,200	1,380	590	680
La Brea/Sunset	1,320	1,350	580	780	1,300	1,300	520	700
Hollywood/Cahuenga	1,170	1,230	470	680	1,050	930	280	325
Hollywood Bowl	1,290	1,380	450	630	1,450	1,440	600	760
Universal City	1,270	1,350	590	820	1,540	1,300	620	930
North Hollywood	1,200	1,000	230	450	--	--	--	--

As was the case with temperature and cooling load analyses discussed in the preceeding section, a distinction is made between predicted velocities in MOS-1 stations (Table 3.5.A) and velocities in the other Starter Line stations (Table 3.5.B). Air velocities predicted for MOS-1 stations are based on average 3-minute headways, corresponding to Long Range Design Standard (LRDS) operations, whereas velocities for all other stations had been analyzed on the basis of 3½- and 2-minute headways. Moreover, simulations for the MOS-1 segment are based on the speed-time profile predicted by the RTS model (computer printout provided by MRTC), which generally results in slower train speeds, than those used previously for the other station velocity simulations. For stations outside MOS-1, this new profile was not used.

The lower train speeds predicted by the RTS model are the result of lower train speed restrictions along some sections of the alignment particularly on curves, and a lower braking rate when stopping for a station (i.e., 2 mph/sec vs. the 3 mph/sec previously used). The speed-time profile previously used was based on train simulator outputs provided by MRTC on September 23, 1983. These outputs were designated TOM1 through TOM4.

The slower train speeds in the MOS-1 segment, coupled with decreased headways (3 minutes rather than 2 minutes) for the long range design, have a diminishing effect on both peak and average platform air velocities. Results in Table 3.5.A show that the peak and average velocities in all MOS-1 stations are within established criteria of 1,000 and 600 fpm, respectively.

During the 3½-minute DY headways, the peak air velocity in the majority of stations outside MOS-1 ranges between 1050 and 1540 fpm as shown on

Table 3.5.B, thus exceeding the criterion of 1000 fpm. These air velocities can be expected to last for 30 to 40 seconds per headway or about 15 to 20 percent of the time. However, the average air velocities are generally at or below the 600 fpm criterion. A value of 620 fpm is predicted in only one instance.

During 2-minute headways, the magnitude of the peak air velocities outside MOS-1 will be nearly the same as with 3½-minute headways. This is an expected result since the peak air velocity is predominantly a function of blockage ratio and train speed, which were the same in both evaluations. However, the duration of the air velocity excursions above 1000 fpm will increase to about 25 to 33 percent of the time, since trains will be approaching a station more frequently. Similarly, the average air velocities show an average increase of about 39 percent, thus exceeding the 600 fpm criterion in 10 stations with values ranging from 630 to 930 fpm.

Air velocities in the range of 1,050 to 1,600 fpm are characterized in Reference 15 as a "moderate breeze" with the potential for raising dust and loose paper. Thus, exposure to peak air velocities of the magnitude predicted outside MOS-1 (i.e., 1,050 to 1,540 fpm) could be perceived as a nuisance by some subway patrons.

However, if train operations outside MOS-1 will be modified to match those for the MOS-1 segment (i.e., longer headways and slower train speeds), then the air velocities in stations outside MOS-1 may be expected to experience a similar reduction, so that they too will fall within the range of established criteria. Furthermore, air velocities are affected by the blockage ratio and as a first approximation they are directly proportional to the blockage ratio. Thus, the predicted peak and average values reported above are the highest expected since a "worst case" blockage ratio (0.527) has been used in all the analyses performed.

3.1.3.2 Station Entranceway Air Velocities - The peak and average criteria in the outflow direction, (i.e., air leaving the station) are 500 fpm and 350 fpm, respectively. In the inflow direction, (i.e., air entering the station) the criteria are higher (i.e., 1000 fpm peak and 600 fpm average). Therefore, the outflow condition will govern.

Air velocities estimated as part of these analyses are based on the cross-sectional area of the passages connecting the station mezzanine via the escalators/stairways with the outdoors.

The predicted air velocities for the MOS-1 stations are shown in Table 3.6. The peak air velocities are below the 500 fpm criterion in 4 of the 5 stations, while values of 580 and 650 fpm are predicted at the Wilshire/Alvarado station entranceways. These velocity excursions above 500 fpm are of short duration, lasting between 10 and 20 seconds. The average air velocities satisfy the 350 fpm criterion at all MOS-1 stations.

These latest values are substantially lower than previous predictions in which the peak air velocity criterion was exceeded at 4 stations and the average velocity criterion was exceeded at 3 of the 5 stations. These air velocity reductions can be attributed to the lower train speeds in the MOS-1 segment which directly affect the magnitude of the piston-generated air flows.

TABLE 3.6

PREDICTED ENTRANCEWAY AIR VELOCITIES FOR MOS-1 STATIONS

Station/Entrance	Area (Ft^2)	Air Velocity (fpm)	
		Peak	Average
Union			
- East Entrance	330	330	130
- West Entrance	300	485	145
Civic			
- Northeast Entrance	400	480	275
- Southwest Entrance	440	480	260
5th/Hill			
- North Entrances (Combined)	620	370	140
- South Entrances (Combined)	470	390	180
7th/Flower			
- East Entrance	160	380	180
- West Entrance	350	280	140
- Wil./Alvarado			
- North Entrance	220	650	310
- South Entrance	330	580	270

Criteria/Outflow

o Peak: 500 fpm
o Average: 350 fpm

Previous simulations predicted peak air velocities exceeding 500 fpm in 10 of the 13 stations outside MOS-1 with values ranging from 550 to 1160 fpm. Likewise, the average air velocities exceeded 350 fpm in 6 stations, with values ranging from 380 fpm to 550 fpm. However, these results may be expected to fall within established criteria based on the air velocity reductions experienced at MOS-1 stations, if train speeds are similarly reduced.

3.2 Emergency Operations

The emergency ventilation analyses focused on evaluating the magnitude of the airflow past a single, six-car train stalled in a tunnel ventilation zone during a multiple-car fire. All other trains operating in the system at the time of the incident are assumed to have proceeded to the nearest station to discharge passengers and await resolution of the emergency. The magnitude of the air velocity in the train annulus indicates whether the spread of smoke can be confined downstream of the fire site, thus protecting the upstream evacuation route, or whether the potential for smoke spreading contrary to the forced ventilation exists (a phenomenon called "back-layering"). To prevent back-layering, the annular air velocity must be greater than a "critical" value whose magnitude depends on the fire heat release rate, the tunnel grade, and the annulus area. For the current study, this critical velocity ranges between 525 and 600 feet per minute, depending on the tunnel grade.

The Subway Environment Simulation (SES) computer program has been used to predict the tunnel air flows during fire conditions. This computer model accounts for the "throttling" effects of a fire (i.e., increased pressure losses), the buoyant effects of the hot smoke which tends to flow "uphill", heat transfer to the tunnel walls by convection and radiation, and changes in the exhaust fans' performance while handling hot (i.e., less dense) gases.

A typical application of the SES consists of locating a train and a heat source to simulate a fire in a selected tunnel segment; operating the appropriate fans at one upstream and one downstream station in a "push-pull" mode (see Figures 3.1 and 3.2), and performing a simulation with the objective of achieving an air velocity in the train annulus in excess of the local critical air velocity.

Thirteen (13) tunnel segments throughout the Starter Line were selected for SES evaluation and they are shown on Figure 3.3. The selected locations cover all the anticipated situations such as a train fire occurring in a "long" tunnel segment with and without a mid-tunnel shaft; in a "short" tunnel segment; in a tunnel segment with a "steep" grade; and in a tunnel segment with a crossover or pocket track.

After it was decided to phase the construction of the Starter Line, the emergency simulations for ventilation zones in the MOS-1 segment were rerun, mainly to analyze the effect of a temporary terminus of the line at Wilshire/Alvarado station.

Also, the tunnel emergency simulation between Wilshire/LaBrea and Wilshire/Crenshaw stations was reassessed to determine the effect of the potential elimination of the mid-tunnel shaft MT-1 (Mullen Avenue shaft). This emergency situation and results of the SES simulation are shown in Table 3.8.

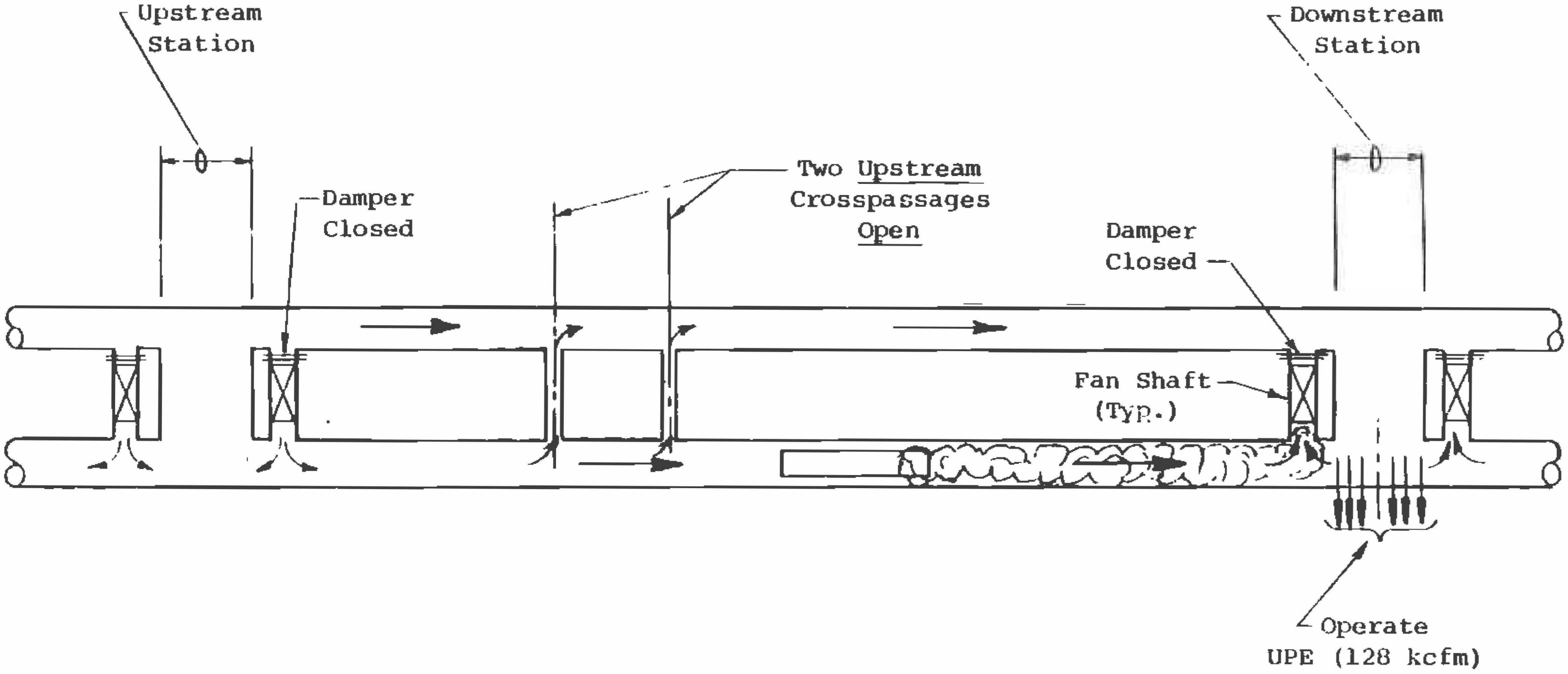

Figure 3.1 Emergency Ventilation Concept for a Typical Tunnel Section

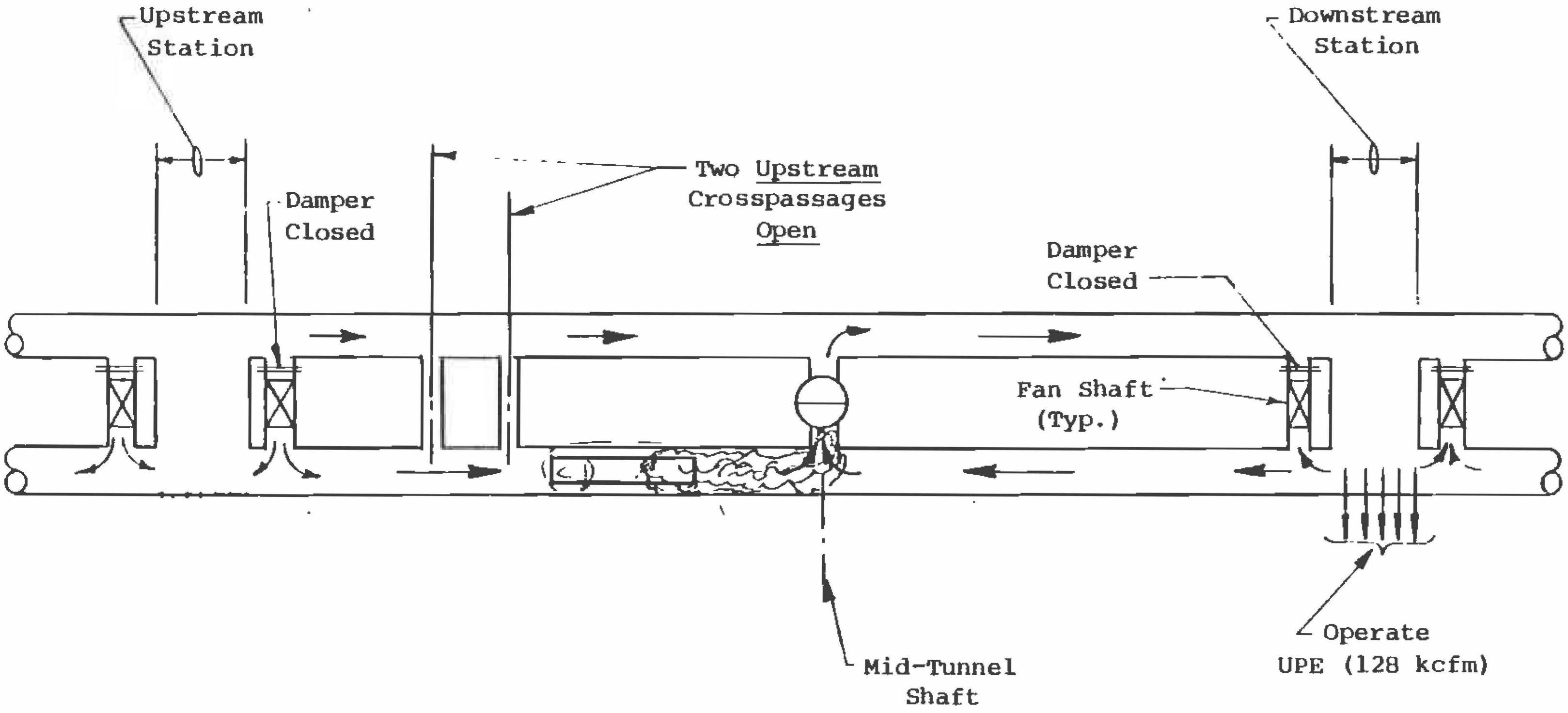

Figure 3.2 Emergency Ventilation Concept for a Tunnel Section with a Mid-Tunnel Shaft

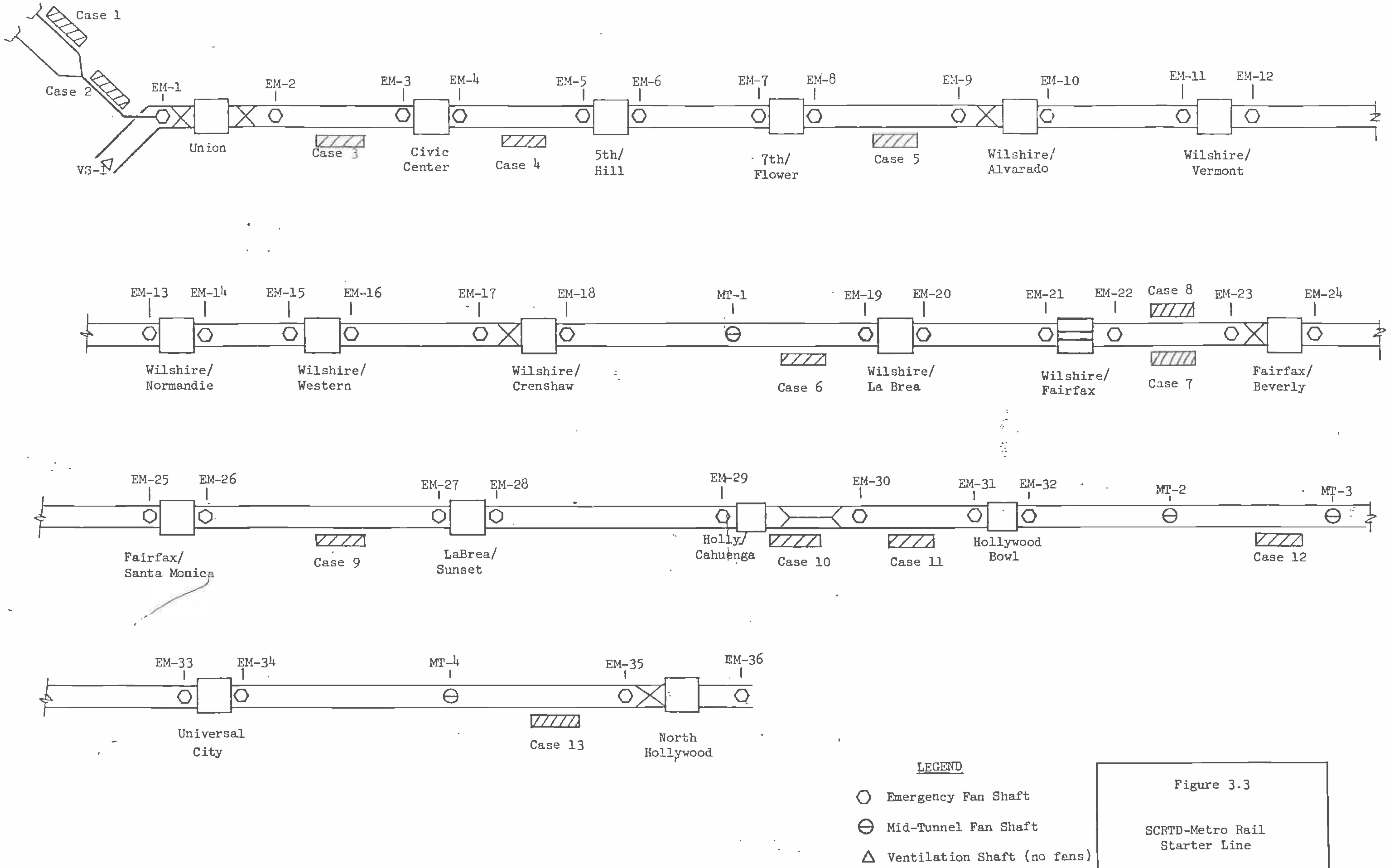

Figure 3.3

SCRTD-Metro Rail Starter Line

TUNNEL EMERGENCY CONDITIONS EVALUATED

A number of emergency ventilation simulations were performed for selected stations representative of the various station types (i.e., central mezzanine, with mezzanines at station ends and for a two-level station). The purpose of these simulations was to establish the station ventilation rates and the airflow patterns in the event of a train fire in a station, by operating the emergency fans at the ends of a station and the UPE system (128,000 cfm) in exhaust mode.

3.2.1 Key Factors and Assumptions Affecting the Results

- **Fire Heat Release Rate:** The extent to which a fire can affect the air flow past a stalled train in a tunnel depends on the fire heat release rate. The combined throttling, buoyant (with downhill ventilation), and fan operating characteristic effects can reduce the tunnel air flow by as much as 30 to 40 percent of the rates achievable during non-fire conditions in a single-track tunnel.

  The following heat release rates were used:

Period	Heat Release Rate (million Btu/hr)
0 - 20 min.	2.4
20 - 40 min.	53.1 (one car involved)
40 - 60 min.	85.3 (two cars involved)

  These heat rates are based on a total fire load of 60 million Btu per car as stipulated in Paragraph 6.2.5 in Reference 11.

The approach used and the assumptions made in obtaining the above values are documented in the attached calculations (Appendix A).

- <u>Blockage Ratio</u>: The air flow resistance produced by a stalled train in the tunnel is a function of the blockage ratio -- increasing with increasing blockage ratio. As the resistance in the affected tunnel segment increases, more of the air flow produced by the emergency fans will bypass the affected tunnel and take the path of least resistance by flowing through the unobstructed tunnels.

  In this study, a "worst case" blockage ratio of 0.527 was used, per Reference 12, corresponding to a vehicle frontal area for a Toronto H-5 car (111.3 square feet) and the tunnel cross-sectional area for a bored-tunnel with a floating slab (211 square feet).

- <u>Open Crosspassages</u>: Crosspassages connecting the outbound and inbound tunnels are provided periodically at spacings of 500 to about 800 feet throughout the Starter Line. Each crosspassage is provided with doors which are normally closed. During a tunnel emergency, the doors at two (2) upstream crosspassages are open while passengers evacuate via the crosspassage to the unaffected tunnel. During this period, some air flow will "leak" through the crosspassages, thereby reducing the air flow past the stalled train.

- <u>Number of Trains in Affected Ventilation Zone</u>: Per Reference 1, a "ventilation zone" is defined as a tunnel segment bounded on both sides by either an emergency fan shaft, a mid-tunnel fan shaft, or a portal. This study assumes that only one six-car train occupies the affected ventilation zone during an emergency. Additional trains in the affected ventilation zone would increase the air resistance and reduce the tunnel air flow rates, such that required velocities to control smoke flow could not be met.

Should two trains be in the same ventilation zone during an emergency, the second train would have to be brought out.

A subsequent study will examine the magnitude of the reduction in airflow caused by a second train entering the affected ventilation zone. The results of this study will be reported elsewhere.

o <u>Other Trains in System</u>: The presence of other trains in the system, with the exception of the affected ventilation zone, will have a beneficial effect on the air flow past the incident train. The air flow resistance in the tunnel segments which these other trains occupy will be increased. Thus, the quantity of air bypassing the affected ventilation zone will be reduced.

Trains which have stopped in a tunnel will be more effective because of the high blockage ratio. The benefit from trains stopped in stations, will be less, if not negligible, because of the typically large station cross-sectional area which results in a low blockage ratio.

In this study, no credit has been taken for the presence of other trains, with the exception of one (1) simulation which examined this effect.

- o <u>Fan Shaft Locations and Fan Capacity</u>: The location of the emergency and mid-tunnel fan shafts, the number of fans per shaft, and the nominal capacity of each fan are given in Table 3.7. For convenience, the emergency fan shafts have been arbitrarily designated as EM-1 through EM-36. Likewise, the mid-tunnel fan shafts have been designated as MT-1 through MT-4.

- o <u>Direction of Forced Ventilation</u>: During a fire in an inclined tunnel, the hot smoke and combustion gases will tend to flow "uphill". Ventilating uphill is preferred, since the forced ventilation will be assisted by buoyancy. However, under some circumstances, downhill ventilation, a less stable condition, may be required. Therefore, a "worst case" condition -- downhill ventilation -- was assumed in each of the cases evaluated in this study.

- o <u>Train Movement Within the Tunnels</u>: During an emergency requiring ventilation, normal train operations will have to cease because the piston effect generated by a fast moving train would destabilize the established and required air flow pattern in the affected tunnel. However, this does not preclude bringing in a slow moving train (i.e., about 10 mph) for evacuating patrons through an adjacent bore.

TABLE 3.7

FAN SHAFT LOCATIONS AND FAN CAPACITIES

Fan Shaft No.	Station	Fan Shaft Location	Number of Fans	Nominal Fan Capacity (CFM per Fan)
EM-1	Union	99+25	3	185,000
EM-2		112+47	3	185,000
EM-3	Civic Center	146+63	2	185,000
EM-4		152+13	2	185,000
EM-5	5th/Hill	171+18	2	150,000
EM-6		176+68	2	150,000
EM-7	7th/Flower	199+93	2	150,000
EM-8		205+43	2	150,000
EM-9	Wilshire/Alvarado	253+92	3	150,000
EM-10		264+14	2	150,000
EM-11	Wilshire/Vermont	313+61	2	150,000
EM-12		319+12	2	150,000
EM-13	Wilshire/Normandie	345+20	2	150,000
EM-14		350+70	2	150,000
EM-15	Wilshire/Western	367+61	2	150,000
EM-16		373+11	2	150,000
EM-17	Wilshire/Crenshaw	396+62	3	150,000
EM-18		405+24	2	150,000
MT-1		434+95	3	150,000
EM-19	Wilshire/La Brea	474+52	2	150,000
EM-20		480+02	2	150,000

TABLE 3.7

FAN SHAFT LOCATIONS AND FAN CAPACITIES
(Continued)

Fan Shaft No.	Station	Fan Shaft Location	Number of Fans	Nominal Fan Capacity (CFM per Fan)
EM-21	Wilshire/Fairfax	524+68	2	150,000
EM-22		533+37	3	150,000
EM-23	Fairfax/Beverly	563+93	3	150,000
EM-24		573+19	2	150,000
EM-25	Fairfax/Santa Monica	623+95	2	150,000
EM-26		629+45	2	150,000
EM-27	La Brea/Sunset	694+94	2	150,000
EM-28		700+44	2	150,000
EM-29	Hollywood/Cahuenga	749+34	2	150,000
EM-30		764+85	3	150,000
EM-31	Hollywood Bowl	798+89	2	150,000
EM-32		804+39	2	150,000
MT-2		846+05	3	150,000
MT-3		888+21	3	150,000
EM-33	Universal City	929+87	2	150,000
EM-34		935+37	2	150,000
MT-4		1000+00	3	185,000
EM-35	North Hollywood	1044+44	3	185,000
EM-36		1057+54	2	185,000

This study assumed that all trains will proceed to the nearest station and remain there until the emergency is resolved.

3.2.2 Tunnel Ventilation - Prediction vs. Criteria

The results of the SES analyses evaluating the performance of the emergency ventilation system during a major tunnel fire are shown on Table 3.8. Except where otherwise noted, a heat release rate of 85.3 million Btu/hr was used corresponding to the heat generated by two fully involved cars during the period from 40 to 60 minutes of the assumed scenario (see Appendix A). Therefore, the predicted results should be valid until a third car becomes fully involved. Also, results for Case Nos. 1 through 5 (except cases 4 and 5(c)) are based on a temporary terminus of the MOS-1 segment, west of Wilshire/Alvarado Station. Case Nos. 4 and 5(c) were simulated assuming that the Starter Line had been extended beyond MOS-1 limits.

The results of simulations for Case Nos. 1 through 5(b) indicate the following:

- In the single-track, non-revenue tunnels extending to the yard from Sta. 84+41 to Sta. 92+09 (Case 1(a)), the spread of smoke can be controlled during fires with a heat release rate up to 53.1 million Btu per hour, corresponding to the burning of a single subway car. During a larger fire, smoke spread cannot be contained (Case 1 (b)). This level of performance is considered acceptable because passenger evacuation will not be a requirement in these non-revenue tunnels, and because these tunnels are relatively short (768 feet).

TABLE 3.8
RESULTS OF SES SIMULATIONS FOR TUNNEL EMERGENCIES

Case No.	Fire Location			Fan Shafts Operated		Air Velocity in Train Annulus (fpm)		Remarks
	Upstream Station	Front of Train	Downstream Station	Supply	Exhaust	Predicted	Required	
1(a)	Portal	90+60	Union	-	EM-1,2,3,4,5 &6	555	540	Non-Revenue Tunnel (w/53.1 x 10^6 Btu/hr)
1(b)	Portal	90+60	Union	-	EM-1,2,3,4,5, &6	440	540	Non-Revenue Tunnel (w/85.3 x 10^6 Btu/hr)
2.	Portal	96+50	Union	-	EM-1,2,3,4,5 &6	840	500	Non-Revenue Tunnel, train in 2-track tun'l
3.	Civic Center	126+00	Union	EM-3,4,5,& 6	EM-1 & 2	615	550	O.K.
4.	Civic Center	164+20	5th/Hill	EM-1,2,3 & 4	EM-5,6,7 & 8	720	600	O.K.
5(a)	7th/Flower	235+30	Wil/Alv'do	EM-5,6,7,8	EM-9 & 10	790	590	O.K., w/Terminus at Wil./Alv'do
5(b)	Wil/Alv'Do	226+90	7th/Flower	EM-9 & 10	EM-5,6,7 & 8	690	590	O.K. W/Terminus at Wil./Alv'do
5(c)	7th/Flower	220+70	Wil/Alv'do	EM-5,6,7 & 8	EM-9,10,11,12	890	590	O.K. w/ Subway Extended Beyond Wil/ Alv'do

TABLE 3.8
RESULTS OF SES SIMULATIONS FOR TUNNEL EMERGENCIES
(CONTINUED)

Case No.	Fire Location			Fan Shafts Operated		Air Velocity in Train Annulus (fpm)		Remarks
	Upstream Station	Front of Train	Downstream Station	Supply	Exhaust	Predicted	Required	
6(a)	Wil/LaBrea	454+95	Wil/ Crenshaw	EM-19,20,&MT-1L	EM-17,18&MT-1R	880	530	O.K., w/Segmented Steel Liner & Mullen Ave. Shaft (MT-1)
6(b)	Wil/LaBrea	454+95	Wil/ Crenshaw	EM-19,20,21&22	EM-15,16,17&18	550	530	O.K., w/Segmented Steel Liner But w/o MT-1
6(c)	Wil/LaBrea	454+95	Wil/ Crenshaw	EM-19,20,21&22	EM-15,16,17&18	910	530	O.K., w/o MT-1, But w/concrete liner.
6(d)	Wil/LaBrea	454+95	Wil/ Crenshaw	EM-19,20,21&22	EM-15,16,17&18	530	530	O.K., Repeat of 6(b), w/Fan Failure at EM-18 & 53.1X10^6 Btu/hr
6(e)	Wil/LaBrea	454+95	Wil/ Crenshaw	EM-19,20,21,&22	EM-15,16,17&18	475	530	Repeat of 6(d), But W/85.3X10^6 Btu/Hr.
7(a)	F'Fax/ Beverly	554+47	Wil/ F'Fax	EM-23,24,25&26	EM-19,20,21&22	660	590	O.K., w.Segmented Steel Liner
7(b)	F'Fax/ Beverly	554+47	Wil/ F'Fax	EM-23,24,25&26	EM-19,20,21&22	610	590	O.K., Repeat of 7(a), But w/fan Failure at EM-22 & 53.1 x 10^6 Btu/hr

TABLE 3.8
RESULTS OF SES SIMULATIONS FOR TUNNEL EMERGENCIES
(CONTINUED)

Case No.	Fire Location			Fan Shafts Operated		Air Velocity in Train Annulus (fpm)		Remarks
	Upstream Station	Front of Train	Downstream Station	Supply	Exhaust	Predicted	Required	
7(c)	F'Fax/ Beverly	554+47	Wil/ F'Fax	EM-23,24,25&26	EM-19,20,21&22	530	590	Repeat of 7(b) with 85.3X10^6 Btu/hr.
8(a)	F'Fax/ Beverly	507+55	Wil/ F'Fax	EM-23,24,25&26	EM-19,20,21&22	860	590	O.K., w/ Segmented Steel Liner
8(b)	F'Fax/ Beverly	507+55	Wil/ F'Fax	EM-23,24,25&26	EM-19,20,21&22	700	590	O.K., Repeat of 8(a), but with fan failure at EM-22
9	La Brea/ Sunset	663+35	F'Fax/ S.Monica	EM-27 & 28	EM- 25 & 26	570	560	O.K.
10	Hollywood/ Cahuenga	762+66	Hollywood Bowl	EM-29	EM-30,31 & 32	890	400	O.K., Train in pocket track
11(a)	Hollywood Bowl	792+39	Hollywood/ Cahuenga	EM-31 & 32	EM-29 & 30	400	600	With fans at only 4 shafts operating
11(b)	Hollywood Bowl	792+39	Hollywood/ Cahuenga	EM-31,32,MT-2R, & MT-2L	EM-27,28,29&30	700	600	O.K., Repeat of 11(a) with more fans operating.
11(c)	Universal City	792+39	Hollywood/ Cahuenga	EM-33,34 MT-2R,MT-2L	EM-27,28,29&30	790	600	O.K., w/one mid-tunnel shaft, w/o Holly. Bowl

TABLE 3.8
RESULTS OF SES SIMULATIONS
FOR TUNNEL EMERGENCIES
(CONTINUED)

Case No.	Fire Location			Fan Shafts Operated		Air Velocity in Train Annulus (fpm)		Remarks
	Upstream Station	Front of Train	Downstream Station	Supply	Exhaust	Predicted	Required	
11(d)	Universal City	792+39	Hollywood/Cahuenga	EM-33,34, MT-2R, MT-2L & MT-3R	EM-27,28,29&30	1290	600	O.K., w/Two Mid-Tunnel Shafts, w/o Holly. Bowl
11(e)	Universal City	792+39	Hollywood/Cahuenga	EM-33,34 MT-2R,MT-2L & MT-3R	EM-27,28,29&30	1230	600	O.K., Repeat of 11(d), with fan failure at EM-30.
12(a)	Universal City	874+12	Hollywood Bowl	EM-33, MT-2L MT-3R & MT-3L	EM-32 & MT-2R	1300	550	O.K.
12(b)	Universal City	874+12 &825+20	Hollywood Bowl	EM-33,MT-2L MT-3R & MT-3L	EM-32 & MT-2R	1500	550	O.K., Repeat of 12(a) 2nd train in adjacent vent. zone
13(a)	North Hollywood	1021+00	Universal City	EM-35,36 & MT-4L	EM-34,MT-4R	1450	575	O.K.
13(b)	North Hollywood	1021+00	Universal City	EM-35,36 & MT-4L	EM-34,MT-4R	1000	575	O.K., with fan failure at MT-4

NOTES:

1. For each of the above cases, the UPE system (128,000 cfm) was operated at the downstream station(s).

2. The results shown are for a heat release rate of 85.3 million Btu/hr, except where otherwise noted.

3. The location of fan shafts EM-1 through EM-36 is shown on Figure 3.3.

4. MT-XR and MT-XL, mean mid-tunnel shaft "X" connecting to the outbound and inbound tunnels, respectively.

5. Ventilation Shaft VS-1 was closed in cases No. 1 through 4.

- The spread of smoke can be controlled in the double-track, non-revenue tunnels east of Union Station, extending from Sta. 92+09 to Sta. 99+02 (Case 2), during a fire with a heat release rate of 85.3 million Btu per hour. This fire magnitude is the revised design value, corresponding to the heat release from two fully-involved subway cars.

- Sufficient ventilation for smoke control can be achieved in the tunnels between Union and Civic Center stations (Case 3) by operating the emergency fans at Union Station in exhaust mode and the emergency fans at Civic Center and Fifth/Hill stations in supply mode. The combined effect of operating the fans at Fifth/Hill and reducing the size of the entranceways at Union Station result in a predicted annular air velocity 12 percent above the local criterion.

- The results for Cases 5(a) and 5(b) indicate that an increase in emergency fan capacity at Wilshire/Alvarado will not be required for MOS-1 operation. The currently specified fans, with a nominal capacity of 150,000 cfm per fan, can provide sufficient tunnel ventilation for smoke control.

Case Nos. 4 and 5(c) show that the predicted air velocities in the tunnels between Civic Center and Fifth/Hill stations and Seventh/Flower and Wilshire/Alvarado stations, respectively, are above the required values when the Starter Line is extended beyond the temporary terminus at Wilshire/Alvarado. At that time, the results shown for Case Nos. 1 through 3 would still apply because those tunnel segments are far enough away from Wilshire/Alvarado station to be affected.

Case Nos. 6(a), (b), (c) were set up to examine the effect of possibly deleting the Mullen Avenue vent shaft MT-1 (between Crenshaw and La Brea stations), and to analyze the impact of segmented steel liners on air velocities. Comparison of results for Case Nos. 6(a) and 6(b) shows that deletion of the mid-tunnel vent shaft, MT-1, causes a significant reduction in air velocities. This reduction can, in part, be offset by operating the fans in four additional emergency vent shafts, two upstream and two downstream of the fire scene. Even though the predicted air velocity drops from 880 fpm to 550 fpm, emergency ventilation requirements can be met without the mid-tunnel fan, because the required air velocity in that ventilation zone is only 530 fpm.

Comparison of results for Cases 6(b) and (c) clearly show the detrimental effect of segmented steel liners on air velocities. In both cases the mid-tunnel shaft MT-1 had been deleted, and with the same number of emergency fans operating, the predicted air velocities were 550 fpm with the steel liner and 910 fpm with the concrete liner.

The benefit of activating additional fans is indicated by comparing the results of Case Nos. 11(a) and 11(b). In Case No. 11(a) the fans in only four shafts (EM-29 through EM-32) were operated, and this resulted in a predicted air velocity of 400 fpm vs. a required velocity of 600 fpm. However, when additional fans in emergency vent shafts EM-27 and EM-28 and in mid-tunnel shaft MT-2 were activated, the predicted velocity increased to 700 fpm.

Generally, other trains stopping in an adjacent ventilation zone will have a beneficial effect on the air velocity past the incident train. This is illustrated by comparing the results for Case Nos. 12(a) and 12(b). The incident train is located between mid-tunnel shafts MT-2 and MT-3, and the direction of ventilation is toward Hollywood Bowl in both cases. The air velocity in the annulus of the incident train is predicted to increase from 1,300 to 1,500 fpm by locating a second train between EM-32 and MT-2.

The best results were achieved in the tunnel segments with mid-tunnel shafts where air velocities in the train annulus range from 1,290 to 1,500 feet per minute.

3.2.2.1 Effect of Open Crosspassages

- As previously noted in Section 3.2.1, an open crosspassage upstream of a train "stalled" in a tunnel reduces the forced ventilation past the train. A series of simulations, corresponding to Case No. 9, were performed with the following results:

No. of Open Crosspassages	Annulus Air Velocity (fpm)	Reduction Factor	Remarks
0	637	--	closed
1	605	0.95	50% blocked
2	570	0.89	50% blocked

Therefore, the air flow past the train can be expected to decrease by about 5 percent for each additional open crosspassage partially obstructed by evacuating passengers.

3.2.2.2 Effect of Blockage Ratio - The throttling effect of a change in blockage ratio on the air flow past a stalled train was evaluated by performing a series of simulations in the outbound tunnel between Fairfax/Santa Monica and La Brea/Sunset stations. The following results were obtained:

Blockage Ratio	(%)	Annulus Air Velocity	V(%)
0.527	--	570 ft/min	--
0.500	-5.0	594 ft/min	+4.0
0.474	-10.0	616 ft/min	+8.0

Therefore, for each 5 percent decrease in the blockage ratio, the results shown on Table 3.8 can be expected to increase by about 4 percent.

3.2.2.3 Benefit of Mid-Tunnel Shafts - In an emergency, fans in mid-tunnel shafts supplement the effectiveness of emergency fans. Moreover all mid-tunnel shafts are equipped with three (3) fans, so that two (2) fans can be used to exhaust (or supply fresh air to) a smoke-filled trainway and the third can supply (or pressurize) the adjacent trainway which serves as a place of refuge for passengers being evacuated. This feature is deemed desirable for long tunnels.

Emergency ventilation simulations were performed in the 3.1 mile long tunnels between Hollywood/Cahuenga and Universal City (i.e, with Hollywood Bowl Station deferred). The effect of having 2 vs. 1 mid-tunnel shafts on the resulting tunnel air flows was examined. The results show (see Table 3.8) that the air velocities required to prevent the spread of smoke towards the evacuation path will be exceeded by 32 percent with 1 mid-tunnel shaft (Case 11(c)) and by 115 percent with 2 shafts (Case 11(d)).

An input assumption which led to the above result was that only a single, six-car train would be stalled in a tunnel ventilation zone during a multiple car fire (Reference 1). Given the length of the tunnel section involved and operating conditions at two-minute headways, one or more trains may have to be backed (reverse move) out of the tunnel for this assumption to apply. The apparently favorable SES quantitative results reported above, with either one or two shafts, under the foregoing input assumption, would be marginal at best if this reverse move concept of operation were not viable due to procedures, communications, loss of power or operator error.

Evacuation of transit passengers from a tunnel imposes unique risks. This time factor in getting people to a place of safe refuge can be very long in any tunnel evacuation as compared to most properly designed buildings. The problems are compounded when the tunnels are very long. The use of more frequent cross passages and the ability to supply fresh air to the parallel "safe" tunnel and maintain it under a positive pressure differential, sufficient to minimize the infiltration of smoke from the involved tunnel into the "safe" tunnel, can mitigate the additional hazards generated by the length of the tunnel relating to time of exposure. In addition, the ability of the ventilation system to control a fire situation for a sufficient period of evacuation time is a function of the assumptions pertaining to the fire scenario. In the real world these assumptions are subject to considerable variation. The longer the required evacuation time, the greater the chances of adverse changes in the fire scenario.

Therefore, although both cases can produce theoretically satisfactory air flow results, the 2-shaft configuration is recommended because it has the added benefit of dividing the tunnels into three, shorter "ventilation zones". This reduces the likelihood that additional trains will enter the affected zone during a fire emergency. An added benefit with two shafts by limiting the distance between shafts is to reduce the purge time. If (fresh) air is introduced at a velocity of 500 fpm, then a 1,500-ft long tunnel can theoretically be purged in 3 minutes, whereas it would take at least 14 minutes to purge a 7,000-ft long tunnel. The actual time may be longer depending on the rate of dilution.

3.2.2.4 Effect of Losing a Critical Fan - A series of emergency ventilation simulations were performed to evaluate the effect of losing a fan, due to a malfunction, in the exhaust shaft nearest the incident. The following cases were selected: Case Nos. 6, 7, and 8 which do not have a mid-tunnel shaft, and Case Nos. 11 and 13 which have a mid-tunnel shaft. The results are shown on Table 3.8.

An air velocity of 530 fpm is required for smoke control in the tunnels between Wilshire/Crenshaw and Wilshire/La Brea stations. With the loss of one emergency fan at shaft EM-18, air velocities of 530 fpm (Case 6(d)) and 475 fpm (Case 6(e)) are predicted for heat release rates of 53.1 million and 85.3 million Btu/hr, respectively, without the Mullen Avenue ventilation shaft. Thus, the level of ventilation which can be maintained with the loss of one emergency fan would be sufficient to control smoke resulting from a fire with a heat release rate up to 53.1 million Btu/hr.

An incident occurring in the outbound tunnel between Wilshire/Fairfax and Fairfax/Beverly stations produces similar results. With the loss of one of the three fans at shaft EM-22, air velocities of 610 fpm (Case 7(b)).and 530 fpm (Case 7(c)) are predicted, corresponding to heat release rates of 53.1 million and 85.3 million Btu/hr, respectively. Thus, the required air velocity of 590 fpm can be maintained for heat release rates up to 53.1 million Btu/hr.

Higher air velocities are predicted for the inbound tunnel between Wilshire/Fairfax and Fairfax/Beverly (Case 8(b)) which connects directly to the lower level at Wilshire/Fairfax station. The additional air flow impedance between the lower and upper platform levels reduces the amount of air "short-circuiting" through the station entranceways, increasing the air flows in the inbound tunnels adjacent to Wilshire/Fairfax station. Hence, the results for this special case are not representative of other tunnel sections. With the loss of one emergency fan at EM-22, an air velocity of 700 fpm is predicted even with a heat release rate of 85.3 million Btu/hr. This exceeds the 590 fpm required at this location.

Air velocities of 1230 fpm (Case 11(e)) and 1000 fpm (Case 13(b)) are predicted in the tunnel sections having mid-tunnel shafts with heat release rates of 85.3 million Btu/hr. In both cases, the required air velocities are exceeded (i.e., 600 and 575 fpm, respectively).

Generally, the following conclusions can be stated regarding the impact of losing one critical fan on emergency ventilation, based on the results of the cases evaluated:

- In tunnel sections without a mid-tunnel shaft, sufficient airflow can be maintained past the incident train to control smoke resulting from a fire with a heat release rate up to 53.1 million Btu/hr, which is equivalent to the burning rate of one fully-involved vehicle.

- In tunnel sections with a mid-tunnel shaft, sufficient airflow for smoke control can be achieved with heat release rates up to 85.3 million Btu/hr which is equivalent to the burning rate of two fully-involved vehicles.

3.2.2.5 Conditions along the Evacuation Route - During a tunnel evacuation, patrons will be directed toward the nearest tunnel crosspassage(s) and pass through to the "unaffected tunnel" which will be maintained as an area of refuge.

Fresh air will be supplied directly to the unaffected tunnel by a mid-tunnel fan in sections so equipped. In sections without a mid-tunnel shaft, fresh air is provided by the emergency fans at the adjacent stations which are operated in a "push-pull" mode. In the simulations performed, air velocities in the unaffected tunnel range from 500 to 1,000 fpm.

The air temperature along the evacuation path, in the affected tunnel, is expected to be within a few degrees of the outdoor temperature, since people will be evacuating toward the fresh air while the hot smoke will be confined downstream of the fire site. Likewise, the temperature in the unaffected tunnel will be close to the outdoor temperature. The actual temperature will depend on the distance the air stream has to travel from the point that it is introduced into the system. This determines the amount of convection heat transfer which can occur between the tunnel structure and the air stream.

3.2.3 Station Ventilation

If a fire occurs in a station, the ventilation concept is to draw outside air down the entrances into the station. This would be accomplished by turning off the station supply air and the smoke exhaust systems, and by operating the station's underplatform exhaust and adjacent emergency fans in the exhaust mode. This will exhaust smoke from the station and cause outside air to be drawn down through the stairways while patrons evacuate up through station exits. At two-level stations (e.g., Wilshire/Fairfax), the emergency fans and only the underplatform exhaust system serving the affected level are activated to preclude drawing smoke to the other level.

After a fire, the station smoke exhaust system is used to purge pockets of smoke from the mezzanine. Smoke is drawn into ceiling return air registers and expelled from the station through exhaust shaft.

The results of the station ventilation simulations are shown on Table 3.9. For the majority of the stations, the number of air changes varies from 24 to 30 per hour. At Wilshire/Fairfax Station, which is a two-level station, the apparent air change rate is higher (50 and 57, at upper and lower train rooms, respectively) only because it is based on the volume per train room. These ventilation rates should be adequate for maintaining the entranceways clear of smoke.

TABLE 3.9

STATION EMERGENCY VENTILATION

Station	Entranceway Air Flow (kcfm)	Air Changes Per Hour	Remarks
Civic Center	306	27	Exhaust @ EM-3 & EM-4
Fifth/Hill	272	24	Exhaust @ EM-5 & EM-6
Wilshire/Normandie	270	27	Exhaust @ EM-13 & EM-14
Wilshire/Fairfax (Upper)	340	50	Exhaust @ EM-21 & EM-22
Wilshire/Fairfax (Lower)	254	57	Exhaust @ EM-21 & EM-22
Fairfax/Santa Monica	253	30	Exhaust @ EM-25 & EM-26

Note: At Wilshire/Fairfax Station, only the UPE system serving the affected platform level (64,000 cfm) was activated. At the remaining stations, the UPE systems serving both trackways were activated (128,000 cfm).

3.2.4 Emergency Ventilation Response Matrix

The operation of fans and dampers during an emergency situation is a complex procedure involving the operation of several fans and their associated dampers in a complementary manner. Operating the wrong sets of fans could conceiveably worsen a situation. Because of these complexities and to avoid possible human error, it is strongly recommended that the operation of fans and their associated dampers be preprogrammed. The operator would then only have to define the location of the disabled train and the direction of evacuation.

The suggested method of fan operation is presented on Figure 3.4 in terms of a response matrix which defines the mode of fan operation (i.e., supply or exhaust) as a function of train location and direction of evacuation.

The train location is defined by the civil station number and the track (i.e., the AR (outbound) or AL (inbound) track). In certain cases, the direction of evacuation can be predetermined, for example, when an emergency occurs at a crossover, evacuation should clearly proceed toward the adjacent station. However, in most cases, the direction of evacuation will depend on emergency-specific information, such as position of the fire along the train, position of adjacent trains, and proximity to subway stations.

A generic description of damper operation, shown alongside the matrix, defines fan/damper interlocks and "fail safe" positions in case of power or control signal failure.

DISABLED TRAIN LOCATION			EVACUATION DIRECTION TOWARDS:	UNION				CIVIC CENTER				5TH/HILL				7TH/FLOWER				WILSHIRE/ALVARADO				WILSHIRE/VERMONT				WILSHIRE/NORMANDIE				WILSHIRE/WESTERN				WILSHIRE/CRENSHAW				MID TUNL		WILSHIRE/LA BREA			
BETWEEN		TRACK		EM-I	UPE	SA	EM-O	EM-I	UPE	SA	EM-O	EM-I	UPE	SA	EM-O	EM-I	UPE	SA	EM-O	EM-I	UPE	SA	EM-O	EM-I	UPE	SA	EM-O	EM-I	UPE	SA	EM-O	EM-I	UPE	SA	EM-O	EM-I	UPE	SA	EM-O	MTI-L	MTI-R	EM-I	UPE	SA	EM-O
STA.	STA.																																												
84+50	100+50	YL	PORTAL	E	E		E	E	E		E	E	E		E	E	E		E																										
		YL	UNION	S			S	S			S	S			S	S			S																										
		YR	PORTAL	E	E		E	E	E		E	E	E		E	E	E		E																										
		YR	UNION	S			S	S			S	S			S	S			S																										
92+00	100+50	AL	EXIT AT EL MONTE STUB	E	E		E	E	E		E	E	E		E	E	E		E																										
		AL	UNION	S			S	S			S	S			S	S			S																										
		AR	EXIT AT EL MONTE STUB	E	E		E	E	E		E	E	E		E	E	E		E																										
		AR	UNION	S			S	S			S	S			S	S			S																										
100+50	103+00	AR/AL	UNION	E			S	S			S	S			S	S			S																										
103+00	107+50	AR/AL	STATION EXITS	E	E		E																																						
107+50	112+50	AR/AL	UNION	S			E	E	E		E	E	E		E	E	E		E																										
112+50	146+50	AL	UNION	S			S	E	E		E	E	E		E	E	E		E																										
		AL	CIVIC CENTER	E	E		E	S			S	S			S	S			S																										
		AR	UNION	S			S	E	E		E	E	E		E	E	E		E																										
		AR	CIVIC CENTER	E	E		E	S			S	S			S	S			S																										
146+50	152+00	AR/AL	STATION EXITS					E	E		E																																		
152+00	170+00	AL	CIVIC CENTER	S			S	S			S	E	E		E	E	E		E																										
		AL	5TH/HILL	E	E		E	E	E		E	S			S	S			S																										
		AR	CIVIC CENTER	S			S	S			S	E	E		E	E	E		E																										
		AR	5TH/HILL	E	E		E	E	E		E	S			S	S			S																										
170+00	178+00	AR/AL	STATION EXITS									E	E		E																														
178+00	199+50	AL	5TH./HILL					S			S	S			S	E	E		E	E	E		E																						
		AL	7TH./FLOWER					E	E		E	E	E		E	S			S	S			S																						
		AR	5TH./HILL					S			S	S			S	E	E		E	E	E		E																						
		AR	7TH./FLOWER					E	E		E	E	E		E	S			S	S			S																						
199+50	206+00	AR/AL	STATION EXITS													E	E		E																										
206+00	254+00	AL	7TH./FLOWER									S			S	S			S	E	E		E	E	E		E																		
		AL	WILSHIRE/ALVARADO									E	E		E	E	E		E	S			S	S			S																		
		AR	7TH./FLOWER									S			S	S			S	E	E		E	E	E		E																		
		AR	WILSHIRE/ALVARADO									E	E		E	E	E		E	S			S	S			S																		
254+00	259+00	AR/AL	WILSHIRE/ALVARADO									E	E		E	E	E		E	E			S	S			S																		
259+00	264+00	AR/AL	STATION EXITS																	E	E		E																						
264+00	313+50	AL	WILSHIRE/ALVARADO													S			S	S			S	E	E		E	E	E		E														
		AL	WILSHIRE/VERMONT													E	E		E	E	E		E	S			S	S			S														
		AR	WILSHIRE/ALVARADO													S			S	S			S	E	E		E	E	E		E														
		AR	WILSHIRE/VERMONT													E	E		E	E	E		E	S			S	S			S														
313+50	319+00	AR/AL	STATION EXITS																					E	E		E																		
319+00	345+50	AL	WILSHIRE/VERMONT																	S			S	S			S	E	E		E	E	E		E										
		AL	WILSHIRE/NORMANDIE																	E	E		E	E	E		E	S			S	S			S										
		AR	WILSHIRE/VERMONT																	S			S	S			S	E	E		E	E	E		E										
		AR	WILSHIRE/NORMANDIE																	E	E		E	E	E		E	S			S	S			S										
345+50	350+50	AR/AL	STATION EXITS																									E	E		E														
350+50	367+50	AL	WILSHIRE/NORMANDIE																					S			S	S			S	E	E		E	E	E		E						
		AL	WILSHIRE/WESTERN																					E	E		E	E	E		E	S			S	S			S						
		AR	WILSHIRE/NORMANDIE																					S			S	S			S	E	E		E	E	E		E						
		AR	WILSHIRE/WESTERN																					E	E		E	E	E		E	S			S	S			S						
367+50	373+00	AR/AL	STATION EXITS																													E	E		E										
373+00	396+50	AL	WILSHIRE/WESTERN																									S			S	S			S	E	E		E	E	E				
		AL	WILSHIRE/CRENSHAW																									E	E		E	E	E		E	S			S	S	S				
		AR	WILSHIRE/WESTERN																									S			S	S			S	E	E		E	E	E				
		AR	WILSHIRE/CRENSHAW																									E	E		E	E	E		E	S			S	S	S				
396+50	400+00	AR/AL	WILSHIRE/CRENSHAW																									E	E		E	E	E		E	E			S	S	S				
400+00	405+00	AR/AL	STATION EXITS																																	E	E		E						
405+00	435+00	AL	WILSHIRE/CRENSHAW																													S			S	S			S	E	S	E	E		E
		AL	WILSHIRE/LA BREA																													E	E		E	E	E		E	S	S	S			S
		AR	WILSHIRE/CRENSHAW																													S			S	S			S	S	E	E	E		E
		AR	WILSHIRE/LA BREA																													E	E		E	E	E		E	S	S	S			S

DAMPER OPERATION

DESIGNATION	LOCATION/FUNCTION/OPERATION
BYPASS DAMPERS	- LOCATED IN CLOSE PROXIMITY TO EMERGENCY OR MID-TUNNEL FANS. - NORMALLY OPEN TO AFFECT EXCHANGE OF TUNNEL AND OUTSIDE AIR. ALLOWS SUCH AIR TO "BYPASS" ADJACENT FANS OR FAN ROOMS. - IN AN EMERGENCY, WHEN MID-TUNNEL OR EMERGENCY FANS ARE ACTIVATED, BYPASS DAMPERS SHALL CLOSE AUTOMATICALLY. - IN CASE OF POWER OR CONTROL SIGNAL FAILURE, BYPASS DAMPERS SHALL "FAIL SAFE" IN THE CLOSED POSITION.
FAN DAMPERS	- ATTACHED TO FAN OR ITS INTERCONNECTING DUCTWORK OR SILENCER. - NORMALLY CLOSED SO AS TO ISOLATE THE FANS FROM THE FLOW OF TUNNEL OR OUTSIDE AIR. ALWAYS CLOSED WHEN THE FAN TO WHICH IT IS CONNECTED IS INOPERATIVE. - IN AN EMERGENCY, WHEN FAN IS ACTIVATED, FAN DAMPER OPENS AUTOMATICALLY. - IN CASE OF POWER OR CONTROL SIGNAL FAILURE, FAN DAMPERS SHALL "FAIL SAFE" IN THE OPEN POSITION, PROVIDED ITS RESPECTIVE FAN IS OPERATIVE.
TRACK DAMPERS	- LOCATED AT THE INTERFACE BETWEEN TRACKWAY AND FAN ROOM. - NORMALLY OPEN TO RELIEF TRAIN-PISTON-ACTION-GENERATED AIR PRESSURE FROM ONE TRAINWAY TO ADJACENT TRAINWAY. - WHEN EMERGENCY FANS ARE ACTIVATED, TRACK DAMPER NEAREST AFFECTED TRAINWAY OPENS AND OTHER TRACK DAMPER CLOSES. - WHEN THIRD MID-TUNNEL FAN IN ANY FAN ROOM IS ACTIVATED IN AN EMERGENCY, TRACK DAMPER CONNECTING TO AFFECTED TRAINWAY OPENS, OTHER TRACK DAMPER CLOSES. - IN CASE OF POWER OR CONTROL SIGNAL FAILURE, TRACK DAMPERS SHALL "FAIL SAFE" IN THE OPEN POSITION.

LEGEND

E	EXHAUST MODE
S	SUPPLY MODE
EM-I	EMERGENCY VENTILATION SHAFT ON THE INBOUND SIDE OF A STATION.
EM-O	EMERGENCY VENTILATION SHAFT ON THE OUTBOUND SIDE OF A STATION.
MT1-L	INTAKE OF MID-TUNNEL VENTILATION SHAFT NO. 1 CLOSE TO AL TRACK.
MT1-R	INTAKE OF MID-TUNNEL VENTILATION SHAFT NO. 1 CLOSE TO AR TRACK.
SA	SUPPLY AIR FAN.
UPE	UNDER PLATFORM EXHAUST FAN.

Figure 3.4

EMERGENCY VENTILATION OPERATING PROCEDURES

DISABLED TRAIN LOCATION			EVACUATION DIRECTION TOWARDS:	WILSHIRE/ CRENSHAW				MID TUNL.		WILSHIRE/ LA BREA				WILSHIRE/ FAIRFAX				FAIRFAX/ BEVERLY				FAIRFAX/ SANTA MONICA				LA BREA/ SUNSET				HOLLYWOOD/ CAHUENGA				HOLLYWOOD BOWL				MID TUNL.		MID TUNL.		UNIVERSAL CITY				MID TUNL.		NORTH HOLLYWOOD			
BETWEEN		TRACK		EM-I	UPE	SA	EM-O	MT1-L	MT1-R	EM-I	UPE	SA	EM-O	EM-I	UPE	SA	EM-O	EM-I	UPE	SA	EM-O	EM-I	UPE	SA	EM-O	EM-I	UPE	SA	EM-O	EM-I	UPE	SA	EM-O	EM-I	UPE	SA	EM-O	MT2-L	MT2-R	MT3-L	MT3-R	EM-I	UPE	SA	EM-O	MT4-L	MT4-R	EM-I	UPE	SA	EM-O
STA.	STA.																																																		
435+00	474+50	AL	WILSHIRE/CRENSHAW	S			S	S	S	E	E		E	E	E		E																																
		AL	WILSHIRE/LA BREA	E	E		E	E	S	S			S	S			S																																
		AR	WILSHIRE/CRENSHAW	S			S	S	S	E	E		E	E	E		E																																
		AR	WILSHIRE/LA BREA	E	E		E	S	E	S			S	S			S																																
474+50	480+00	AR/AL	STATION EXITS							E	E		E																																				
480+00	524+50	AL	WILSHIRE/LA BREA					S	S	S			S	E	E		E	E	E		E																												
		AL	WILSHIRE/FAIRFAX					E	E	E	E		E	S			S	S			S																												
		AR	WILSHIRE/LA BREA					S	S	S			S	E	E		E	E	E		E																												
		AR	WILSHIRE/FAIRFAX					E	E	E	E		E	S			S	S			S																												
524+50	533+50	AR/AL	STATION EXITS											E	E		E																																
533+50	564+50	AL	WILSHIRE/FAIRFAX							S			S	S			S	E	E		E	E	E		E																								
		AL	FAIRFAX/BEVERLY							E	E		E	E	E		E	S			S	S			S																								
		AR	WILSHIRE/FAIRFAX							S			S	S			S	E	E		E	E	E		E																								
		AR	FAIRFAX/BEVERLY							E	E		E	E	E		E	S			S	S			S																								
564+50	568+00	AR/AL	FAIRFAX/BEVERLY							E	E		E	E	E		E	E			S	S			S																								
568+00	573+00	AR/AL	STATION EXITS															E	E		E																												
573+00	624+00	AL	FAIRFAX/BEVERLY											S			S	S			S	E	E		E	E	E		E																				
		AL	FAIRFAX/SANTA MONICA											E	E		E	E	E		E	S			S	S			S																				
		AR	FAIRFAX/BEVERLY											S			S	S			S	E	E		E	E	E		E																				
		AR	FAIRFAX/SANTA MONICA											E	E		E	E	E		E	S			S	S			S																				
624+00	629+50	AR/AL	STATION EXITS																			E	E		E																								
629+50	695+00	AL	FAIRFAX/SANTA MONICA															S			S	S			S	E	E		E	E	E		E																
		AL	LA BREA/SUNSET															E	E		E	E	E		E	S			S	S			S																
		AR	FAIRFAX/SANTA MONICA															S			S	S			S	E	E		E	E	E		E																
		AR	LA BREA/SUNSET															E	E		E	E	E		E	S			S	S			S																
695+00	700+50	AR/AL	STATION EXITS																							E	E		E																				
700+50	749+50	AL	LA BREA/SUNSET																			S			S	S			S	E	E		E	E	E		E														
		AL	HOLLYWOOD/CAHUENGA																			E	E		E	E	E		E	S			S	S			S														
		AR	LA BREA/SUNSET																			S			S	S			S	E	E		E	E	E		E														
		AR	HOLLYWOOD/CAHUENGA																			E	E		E	E	E		E	S			S	S			S														
749+50	754+50	AR/AL	STATION EXITS																											E	E		E																		
754+50	765+00	AR/AL	HOLLYWOOD/CAHUENGA																							S			S	S			S	E	E		E	E	E												
765+00	799+50	AL	HOLLYWOOD/CAHUENGA																							S			S	S			S	E	E		E	E	E												
		AL	HOLLYWOOD BOWL																							E	E		E	E	E		E	S			S	S	S												
		AR	HOLLYWOOD/CAHUENGA																							S			S	S			S	E	E		E	E	E												
		AR	HOLLYWOOD BOWL																							E	E		E	E	E		E	S			S	S	S												
799+50	804+50	AR/AL	STATION EXITS																															E	E		E														
804+50	817+50	AL	HOLLYWOOD BOWL																											S			S	S			S	E	S	E	S										
		AL	UNIVERSAL CITY																											E	E		E	E	E		E	S	S	S	S										
		AR	HOLLYWOOD BOWL																											S			S	S			S	S	E	S	E										
		AR	UNIVERSAL CITY																											E	E		E	E	E		E	S	S	S	S										
817+50	871+00	AL	HOLLYWOOD BOWL																															S			S	S	S	E	S	E	E		E						
		AL	UNIVERSAL CITY																															E	E		E	E	S	S	S	S			S						
		AR	HOLLYWOOD BOWL																															S			S	S	S	S	E	E	E		E						
		AR	UNIVERSAL CITY																															E	E		E	S	E	S	S	S			S						
871+00	930+00	AL	HOLLYWOOD BOWL																																			S	S	S	S	E	E		E	E	E				
		AL	UNIVERSAL CITY																																			E	S	E	S	S			S	S	S				
		AR	HOLLYWOOD BOWL																																			S	S	S	S	E	E		E	E	E				
		AR	UNIVERSAL CITY																																			S	E	S	E	S			S	S	S				
930+00	935+50	AR/AL	STATION EXITS																																							E	E		E						
935+50	991+50	AL	UNIVERSAL CITY																																							S			S	E	S	E	E		E
		AL	NORTH HOLLYWOOD																																							E	E		E	S	S	S			S
		AR	UNIVERSAL CITY																																							S			S	S	E	E	E		E
		AR	NORTH HOLLYWOOD																																							E	E		E	S	S	S			S
991+50	1044+50	AL	UNIVERSAL CITY																																							S			S	S	S	E	E		E
		AL	NORTH HOLLYWOOD																																							E	E		E	E	S	S			S
		AR	UNIVERSAL CITY																																							S			S	S	S	E	E		E
		AR	NORTH HOLLYWOOD																																							E	E		E	S	E	S			S
1044+50	1048+00	AR/AL	NORTH HOLLYWOOD																																							E	E		E	E	E	S			S
1048+00	1052+50	AR/AL	STATION EXITS																																													E	E		E
1052+50	1057+50	AR/AL	NORTH HOLLYWOOD																																											S	S	S			E

Figure 3.4

EMERGENCY VENTILATION OPERATING PROCEDURES (continued)

3.2.5 System Resistance for Fan Sizing

The operating pressure for both emergency and mid-tunnel fans is calculated as the sum of the shaft losses on the intake and discharge sides of the fan plus the residual pressure which must be maintained at the shaft/tunnel junction.

The shaft losses include pressure losses incurred at shaft elbows, area expansions and contractions, sound attenuators, fan and track dampers and discharge gratings. These losses must be calculated by the Section Designers using the final shaft configurations.

The residual pressure exclusive of pressure drop through dampers and ductwork accounts only for the system resistance of the stalled train, the tunnels, the tunnel/shaft junction, and the influence of other operating fans. With two fans operating in the forward direction (exhaust), the following values should be used:

	Residual Pressure (in. wg.)*	
Nom. Flow Rate (per fan)	Mid-tunnel	Emergency
150,000 cfm	0.9	0.5
185,000 cfm	1.2	0.9

*(based on standard air density, 0.075 lbm/ft^3)

3.3 Methane Purge

A spectacular methane gas explosion near the Farmer's Market in the Fairfax District on March 24, 1985 injured 22 people in a department store. This illustrates the potential for disaster in areas where high levels of methane concentration build up under pressure and eventually seep to the surface or into man-made structures below the surface. The state Division of Oil and Gas expressed a growing concern after this latest explosion that old oil fields in the Los Angeles Basin are beginning to repressure themselves, thus causing potentially dangerous situations where there is above- or especially below-ground development.

Results of exploratory drillings have substantiated the existence of gas-bearing formations along certain sections of the Starter Line. Engineering-Science (ES) has quantified the potential problem (Reference 13) by undertaking a field testing program for measuring gas field concentrations and pressures at several locations along the subway alignment. In the area of proposed tunnel alignment between Crenshaw and La Brea stations, methane concentrations as high as 95 percent by volume at a pressure of 7 psig were detected by one of the probes.

During revenue service, it is anticipated that the piston-generated air flows can adequately disperse and dilute any methane present in the tunnels. However, during periods of system shut-down, when train operations cease, ventilation is being considered as one option to mitigate gas accumulation. Air velocities of at least 100 fpm (Reference 14) must be maintained to prevent the formation of methane layers at the crown of the tunnels. which

report is inconclusive on recommendation as what alternative is best suitable for dealing of gas @ Crenshaw - LaBrea

This sentence doesn't make any sense!

will be equipped with mid-tunnel ventilation fans, and to all other tunnels only in case of fire emergencies.

3.3.1 MOS-1 Analyses

None of the tunnels in the MOS-1 section are equipped with a mid-tunnel ventilation shaft. Tunnel purging during periods of system shut-down,except in a fire emergency, can only be accomplished by operating the ventilation systems at adjacent stations. The SES computer program has been used to predict the air flow rates in each MOS-1 tunnel segment which can be achieved by operating station ventilation systems based on various concepts as described below.

3.3.1.1. Concepts

- Supply and Exhaust: This concept consists of ventilating a pair of tunnels between adjacent stations by operating the underplatform exhaust (UPE) system (128,000 cfm) at one station and operating the supply air system (150,000 cfm) at the adjacent station (i.e., in a "push-pull" mode).

- Augmented Exhaust Capacity: This is similar to the basic concept, except that the station smoke exhaust system is also operated to supplement the UPE system. The total exhaust capacity available at each station is shown on Table 3.10.

TABLE 3.10

STATION EXHAUST SYSTEMS CAPACITIES
FOR MOS-1

	Flow Rate (cfm)		
	UPE	Smoke Exhaust	Total
Union	128,000	168,000	296,000
Civic Center	128,000	133,200	261,200
Fifth/Hill	128,000	186,000	314,000
7th/Flower	128,000	129,000	257,000
Wilshire/Alvarado	128,000	77,000	205,000

Check this ~~w/~~ MOS-1
layouts of

- **Exhaust Only**: Tunnel purging is accomplished by operating both the UPE and smoke exhaust systems at a given station. The supply air system at the adjacent station is not operated. This condition was examined to provide a contingency mode of operation in case the current supply air duct configuration proves to be an ineffective means for delivering fresh air to the tunnels.

in this apr, most of makeup air would come thru stations entrances not from tunnels —

3.3.1.2 Assumptions

In all cases analyzed, the following assumptions apply:

- Fan and bypass dampers in the ventilation shafts adjacent to the stations at which the ventilation systems are operating, are in the closed position.
- Train operations have ceased and no trains are present in the tunnel sections examined.
- In the simulations using the station supply air system, the adverse effect of discharging the air at a high velocity toward the center of the station and away from the tunnels, had to be ignored since the program cannot simulate localized effects.

3.3.1.3 Results of MOS-1 Tunnel Purging Simulations

The results of the SES simulations for revenue tunnels are summarized on Table 3.11 and are also shown schematically on Figures 3.5 through 3.8. The results for the non-revenue tunnels east of Union Station are shown on Figures 3.9 and 3.10. The results indicate the following:

- Tunnel air flows ranging between 18,700 and 24,900 cfm can be generated in the tunnels between Civic Center and Wishire/Alvarado and about 10,200 cfm (corresponding to about 50 fpm velocity) between Union and Civic Center by operating the UPE systems (128,000 cfm) at one station and supply air systems (150,000 cfm) at the adjacent station.

  this is inadequate for gas purge
  see pg. 3-48)

- By operating the station smoke exhaust to supplement the UPE system, the tunnel air flow between Union and Civic Center can be increased from about 10,200 cfm to about 22,500 cfm. In the other tunnel segments, air flows in excess of 30,000 cfm can be achieved.

- By using the station exhaust systems only, tunnel air flows range from 19,700 cfm between Union and Civic Center to a high value of 43,000 cfm between 5th/Hill and 7th/Flower.

- The non-revenue tunnels east of Union Station can be purged by operating the UPE and smoke exhaust systems at Union Station. Air flows ranging from 25,440 to 54,400 cfm can be achieved in the tunnels leading to the yards with corresponding air velocities in

TABLE 3.11

SUMMARY OF REVENUE TUNNEL PURGING SIMULATIONS FOR MOS-1

Case No.	Location (Between)	Air Flow Rates (cfm)	Air Velocity (fpm)	Location of Station Systems Activated		
				S/A	UPE	S/E
A-1	Union	10,200	50	Union	Civic	-
A-2	and	22,500	105 ✓	Union	Civic	Civic
A-3	Civic Center	19,700	95	-	Civic	Civic
B-1	Civic Center	18,700	90	Civic	5th/Hill	-
B-2	and	30,700	145 ✓	Civic	5th/Hill	5th/Hill
B-3	5th/Hill	23,500	110	-	5th/Hill	5th/Hill
C-1	5th/Hill	24,900	120	7th/Flower	5th/Hill	-
C-2	and	32,900	155 ✓	7th/Flower	5th/Hill	5th/Hill
C-3	7th/Flower	21,700	105	-	5th/Hill	5th/Hill
D-1	7th/Flower	21,200	100	Wil./Alv'do	7th/Flower	-
D-2	and	32,500	155 ✓	Wil./Alv'do	7th/Flower	7th/Flower
D-3	Wil./Alvarado	25,400	120	-	7th/Flower	7th/Flower

Legend:

S/A - Supply air System
UPE - Underplatform Exhaust System
S/E - Smoke Exhaust System

CASE A-1:

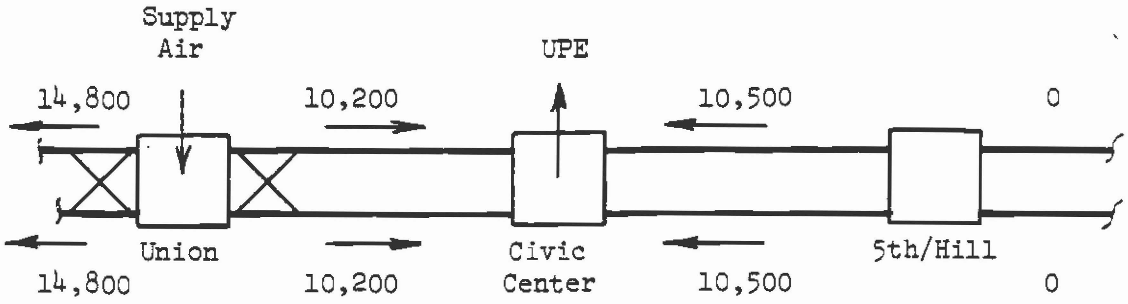

CASE A-2:

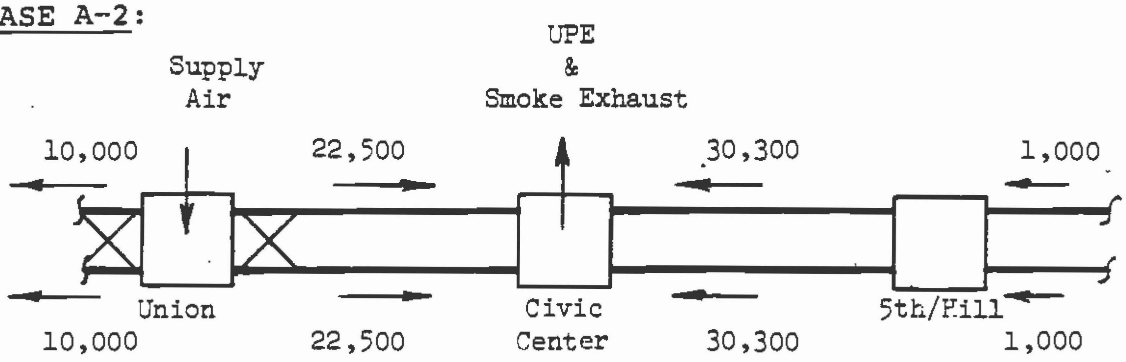

CASE A-3:

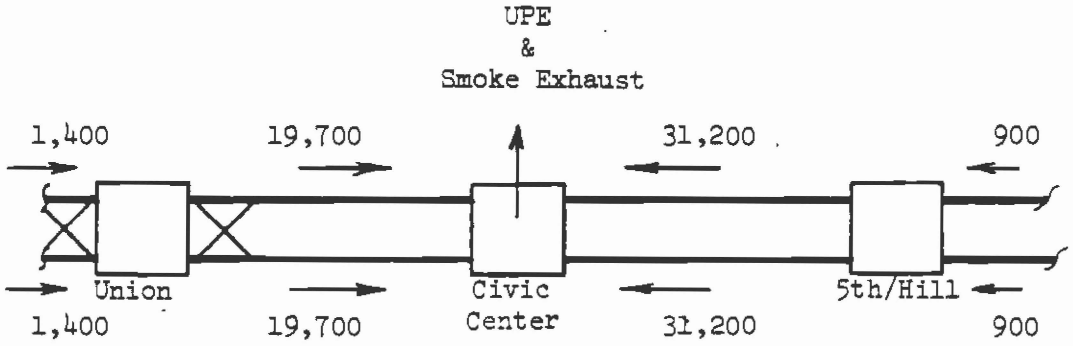

Notes

1. Above numbers represent air flow rates in cfm.
2. For station exhaust system capacities, refer to Table 3.10

Figure 3.5 Results of Tunnel Purging Simulations (Revenue Tunnels) for Cases A-1 through A-3

CASE B-1:

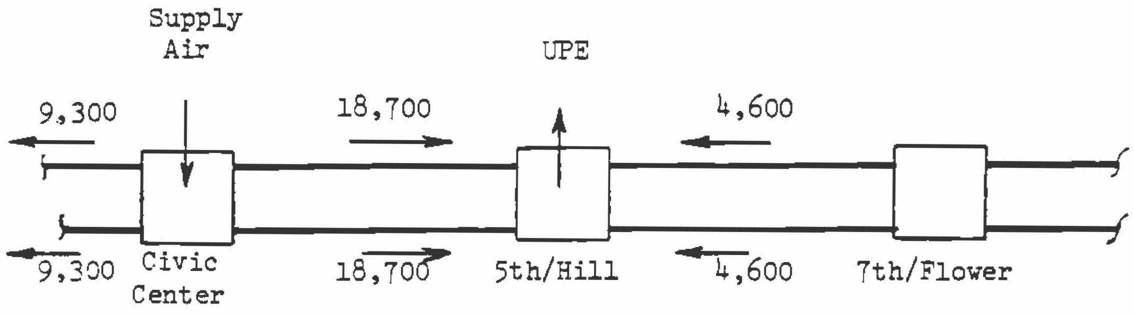

CASE B-2:

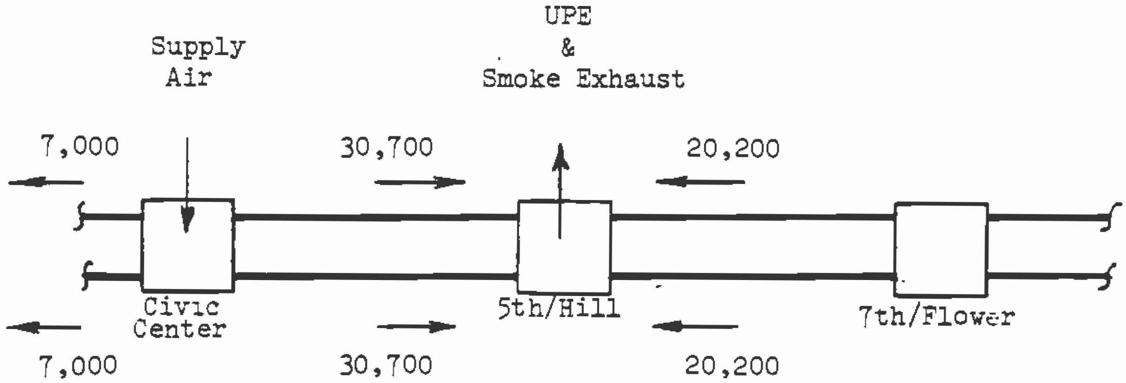

CASE B-3:

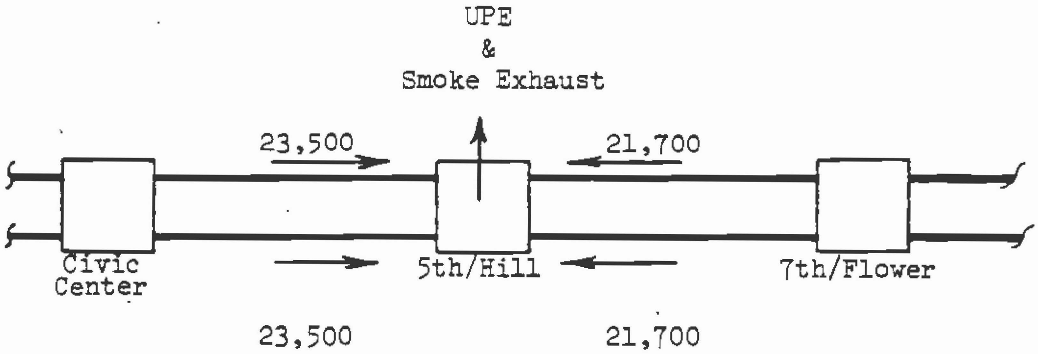

* Refer to Notes on Figure 3.5

Figure 3.6 Results of Tunnel Purging Simulations (Revenue Tunnels) for Cases B-1 through B-3

CASE C-1:

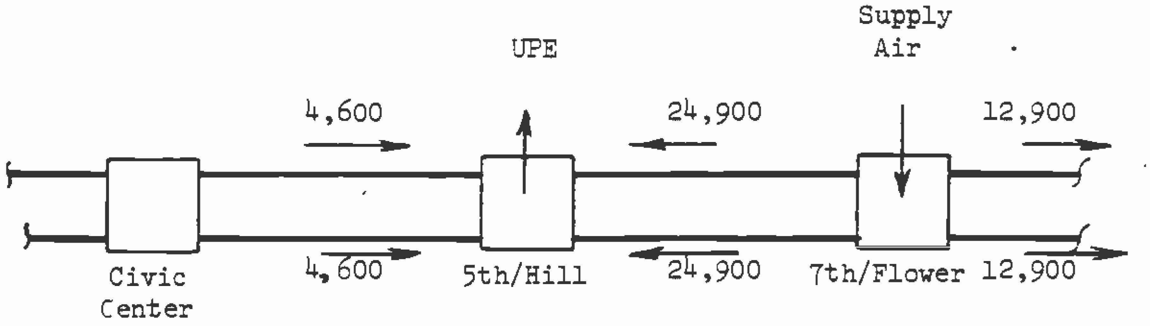

CASE C-2:

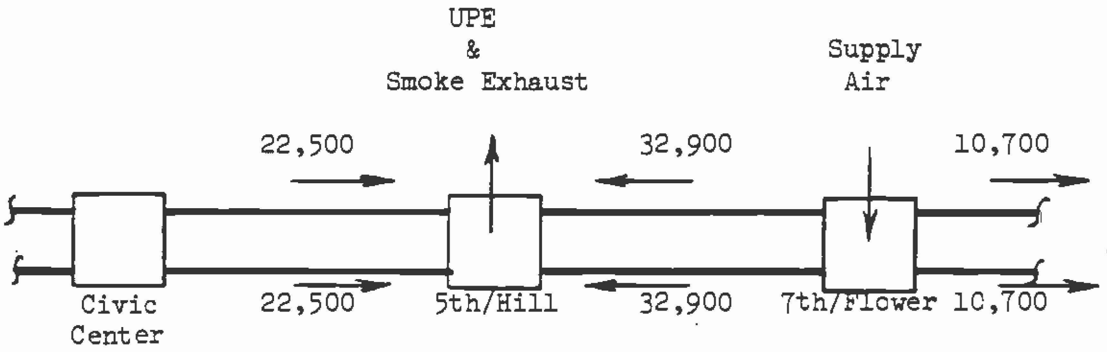

CASE C-3:

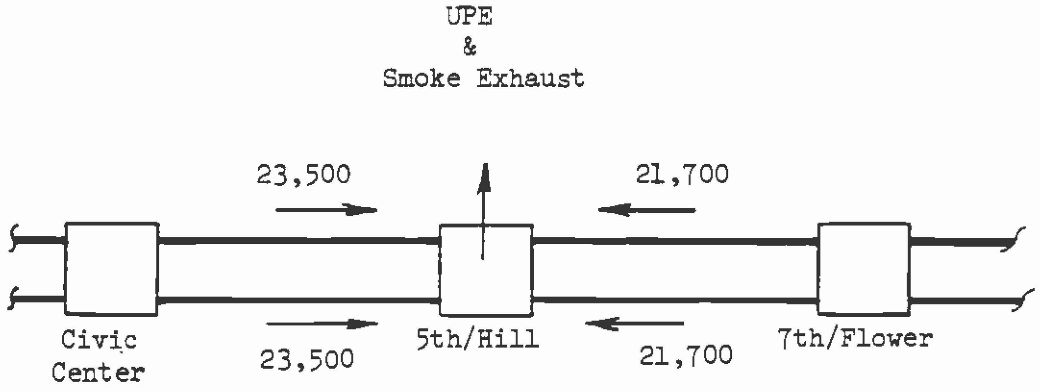

* Refer to Notes on Figure 3.5

Figure 3.7 Results of Tunnel Purging Simulations (Revenue Tunnels) for Cases C-1 through C-3

CASE D-1:

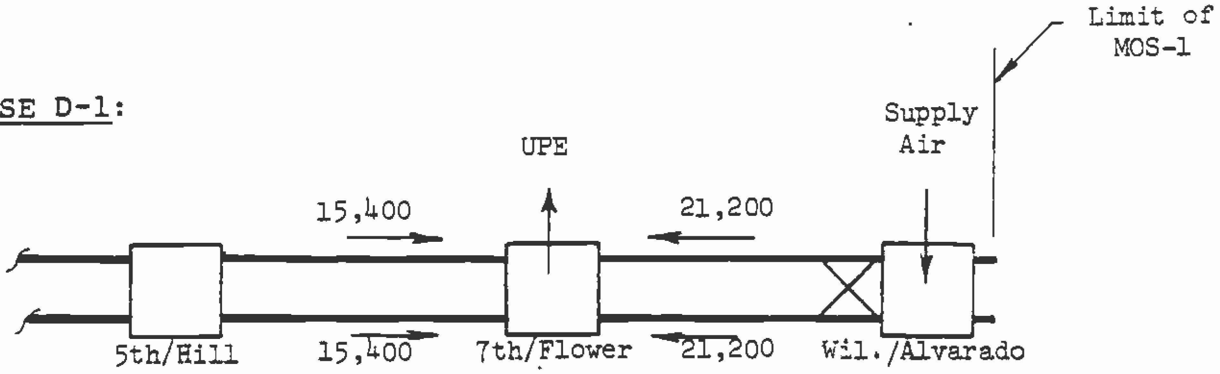

CASE D-2:

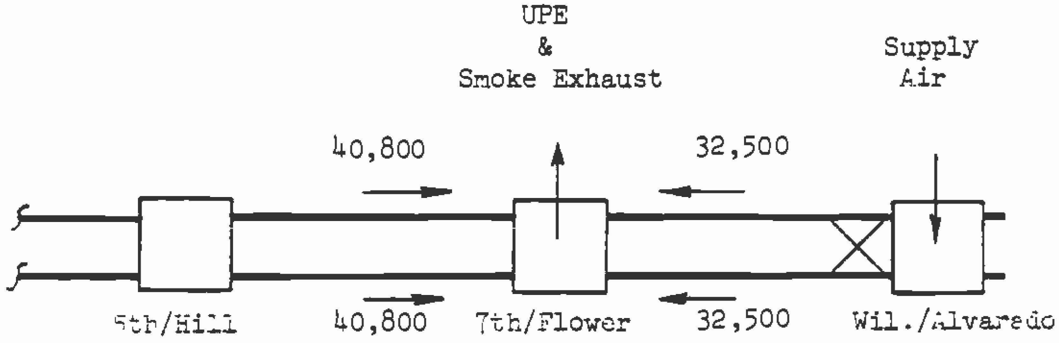

CASE D-3:

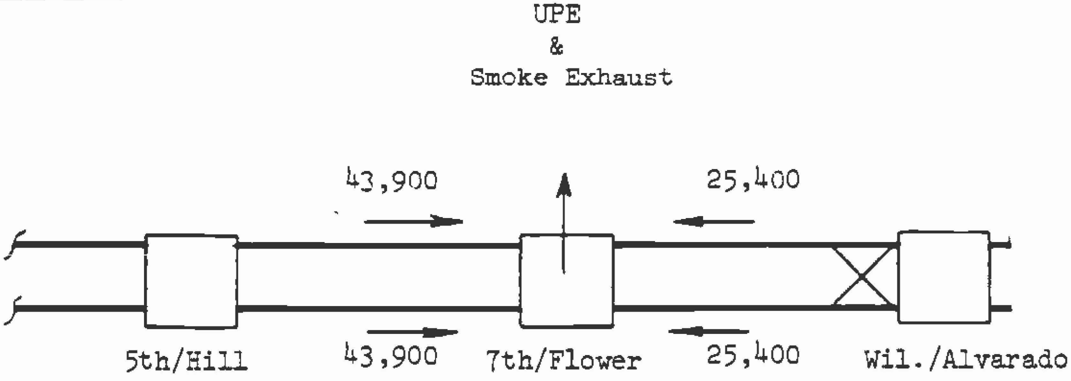

* Refer to Notes on Figure 3.5

Figure 3.8 Results of Tunnel Purging Simulations (Revenue Tunnels) for Cases D-1 through D-3

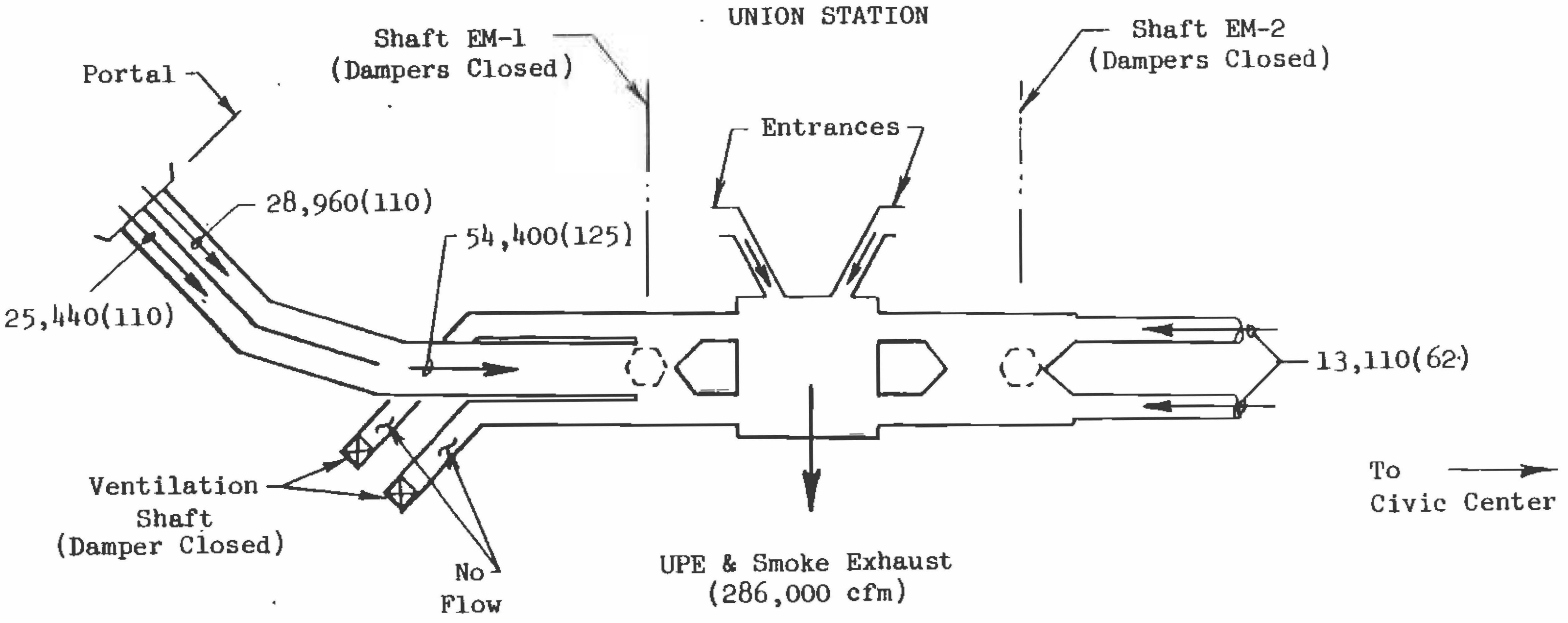

Note: 54,400(125) means an air flow rate of 54,400 cfm with an air velocity of 125 feet per minute.

Figure 3.9 Purging Non-Revenue Tunnels Leading to Yards

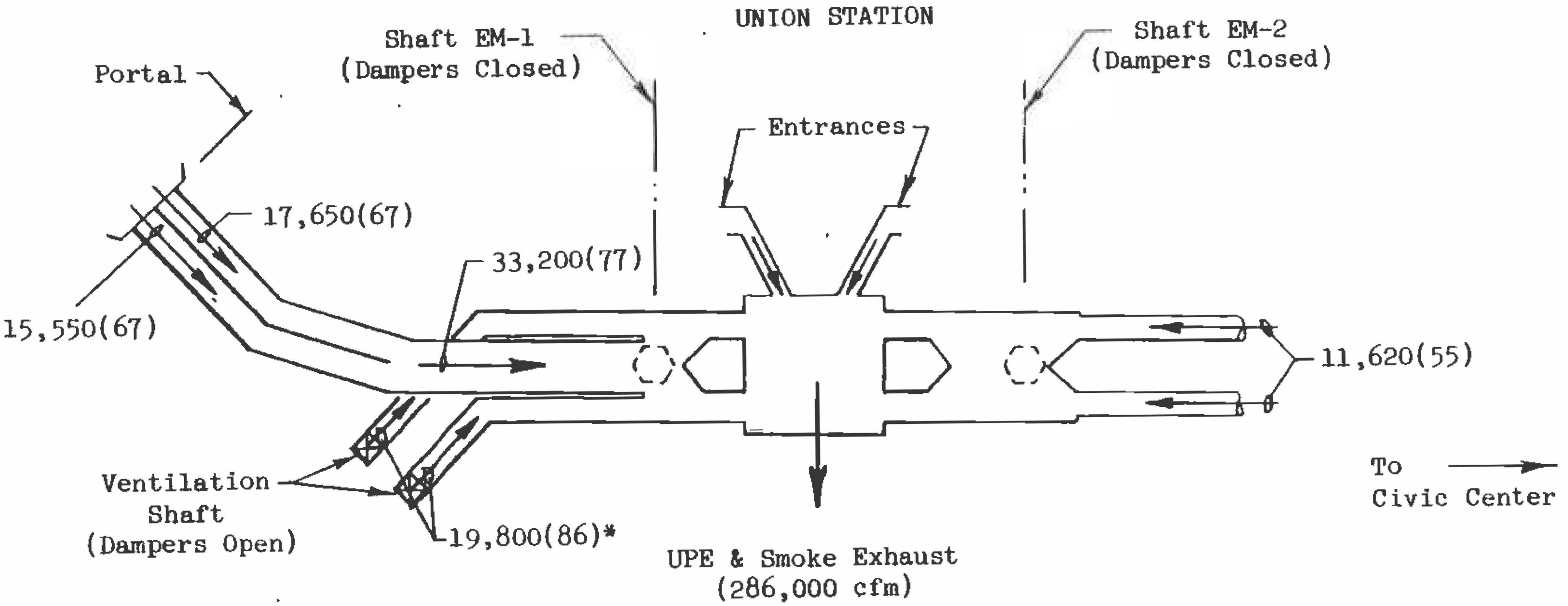

* See note on Figure 3.9

Figure 3.10 Purging El Monte Stub Tunnels (Non-Revenue) excess of 100 fpm. By opening the ventilation shaft dampers, about 19,800 cfm with an air velocity of 86 fpm can be expected in each bore of the El Monte stub tunnels. The above air flows and corresponding air velocities can be increased by 16 percent by also operating the station exhaust systems at Civic Center.

3.3.1.4 Discussion

For the MOS-1 segment, the highest predicted air flow rates in most tunnel segments are obtained with the "augmented exhaust" concept (Cases A-2 through D-2) and the lowest flow rates are predicted with the supply/exhaust ("push-pull") concept (Cases A-1 through D-1). The predictions for both of the above concepts, which utilize the supply air system at one station, should probably be reduced because the the current supply duct configuration directs an air "jet" into the station away from the tunnels.

The "exhaust" concept (Cases A-3 through D-3) can produce equal or better results in most MOS-1 tunnel segments without the use of station supply air fans. Furthermore, this mode of operation can be used to purge multiple tunnels simultaneously, as shown on Figure 3.11 by operating the exhaust systems at every other station.

Results of the latest analyses identify new and additional cost-saving opportunities, at least in the MOS-1 phase of the Starter Line. In previous analyses, it had already been determined that installation of the station supply air systems could be deferred until mechanical cooling is installed; but at that time, it was deemed desirable to retain the supply air systems, so

Notes:

1. Numbers represent air flow rates in cfm.
2. For station exhaust system capacities, refer to Table 3.10

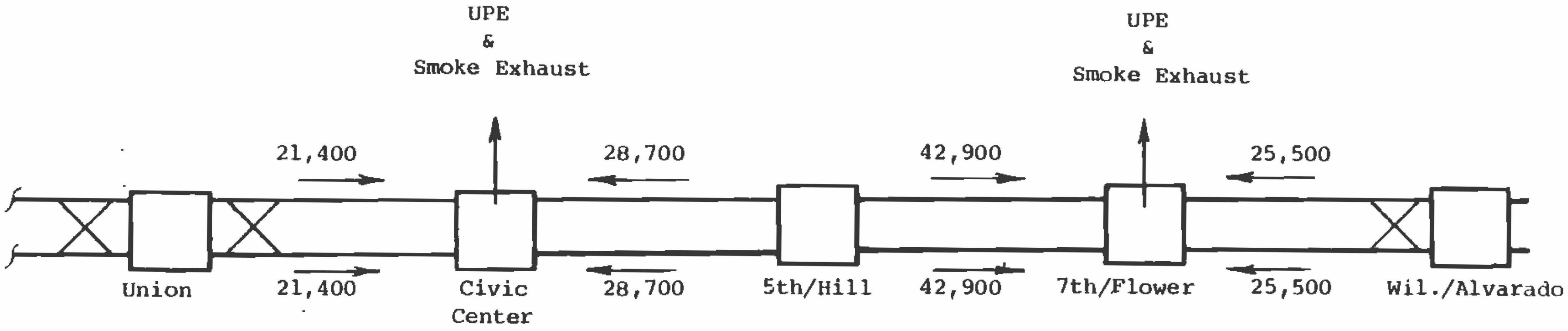

Figure 3.11 Purging multiple tunnels simultaneously

that they could be applied for purging methane gas accumulations from connecting tunnels. Now, however, it is found that nearly equal or better methane purging cpabilities exist if smoke exhaust systems at the mezzanine ceiling, in lieu of and the station supply air systems, are operated during the purge cycle.

This enhanced purging capability, utilizing exhaust systems only, came about as a result of significant increases in station smoke exhaust capacities in MOS-1 stations. Previous analyses had precluded effective use of smoke exhaust systems for tunnel methane purging, because these systems were assumed to have a relatively low capacity of 60,000 cfm per station. However, final station design reveals capacities ranging between 129,000 cfm and 186,000 cfm in four out of five MOS-1 stations.

?

3.3.2 Analyses Outside MOS-1

Three (3) sections have been examined -- the section between Wilshire/La Brea and Wilshire/Fairfax; the section between Wilshire/Fairfax and Fairfax/Beverly; and the section between Fairfax/Santa Monica and La Brea/Sunset.

The section between Fairfax/Santa Monica and La Brea/Sunset is one of the longest tunnel sections without a mid-tunnel shaft and bounded by typical, single-level, center platform stations. Hence, the results obtained for this case give an indication of the minimum air flow attainable in other, shorter tunnel sections which have not been simulated.

3.3.2.1 Concepts

These analyses were carried out prior to the Methane Purge study for MOS-1 described above, and were not updated to reflect changes in input parameters or concept. The most significant of these changes, in terms of its adverse effect on methane purging capabilities, would be the pending substitution of segmented steel liners for concrete liners in the Wilshire/Fairfax area. Even though the steel segments would be impervious to methane gas, any infiltration of the gas through liner joints would tend to accumulate in pockets formed by the segments. The quantity of air required, in terms of minimum velocity, to flush a gas accumulation from such pockets has not been determined as yet in any of the analyses for tunnels outside of MOS-1. No doubt, it will be far in excess of the 100 fpm velocity criterion established for smooth concrete tunnels.

Results are based on purging the tunnels with station supply air systems and underplatform exhaust systems ("push-pull" concept). In each case, operation of the supply air systems (150,000 cfm) at one (1) station and the UPE systems (128,000 cfm) at one (1) adjacent station has been simulated. The bypass dampers in the ventilation shafts adjacent to the stations whose ventilation systems were operated, have been assumed closed. Also, it has been assumed that train operations had ceased and that no trains were present in the tunnel sections examined. The adverse effect of discharging the supply air at a high velocity toward the center of the station and away from the tunnels, as well as the added resistance to tunnel air flow imposed by segmented steel liners have not been assessed.

3.3.2.2. Results of Tunnel Purging Simulation Outside MOS-1

The results for the three (3) cases simulated are shown schematically on Figure 3.12. The air flow rate in cubic feet per minute (cfm) and the air velocity in feet per minute (shown in parentheses) are indicated for each tunnel section.

The results show that tunnel air flow rates ranging from 20,100 to 26,900 cfm can be achieved by operating the station ventilation systems in a "push-pull" mode. These air flow rates correspond to an air velocity range of 95 to 127 fpm based on a tunnel cross-sectional area of 211 square feet.

The maximum methane infiltration rates which can be diluted to a methane concentration of 0.25% by the predicted tunnel air flow rates are shown on Table 3.12. In the tunnel with the lowest predicted air flow rate (i.e., 20,100 cfm of fresh air), the ventilation can handle up to 50 cfm of methane gas infiltration, which is equivalent to 72,000 cubic feet per day. However, in tunnels with segmented steel liners and with supply air systems ducted away from the tunnels, actual ventilation capacities will be significantly less.

Even without these retarding influences, the predicted tunnel air velocity is marginally below the criterion (95 vs. 100 fpm) in 1 of the 6 tunnel sections examined (i.e., in the outbound tunnel between Wilshire/La Brea and Wilshire/Fairfax).

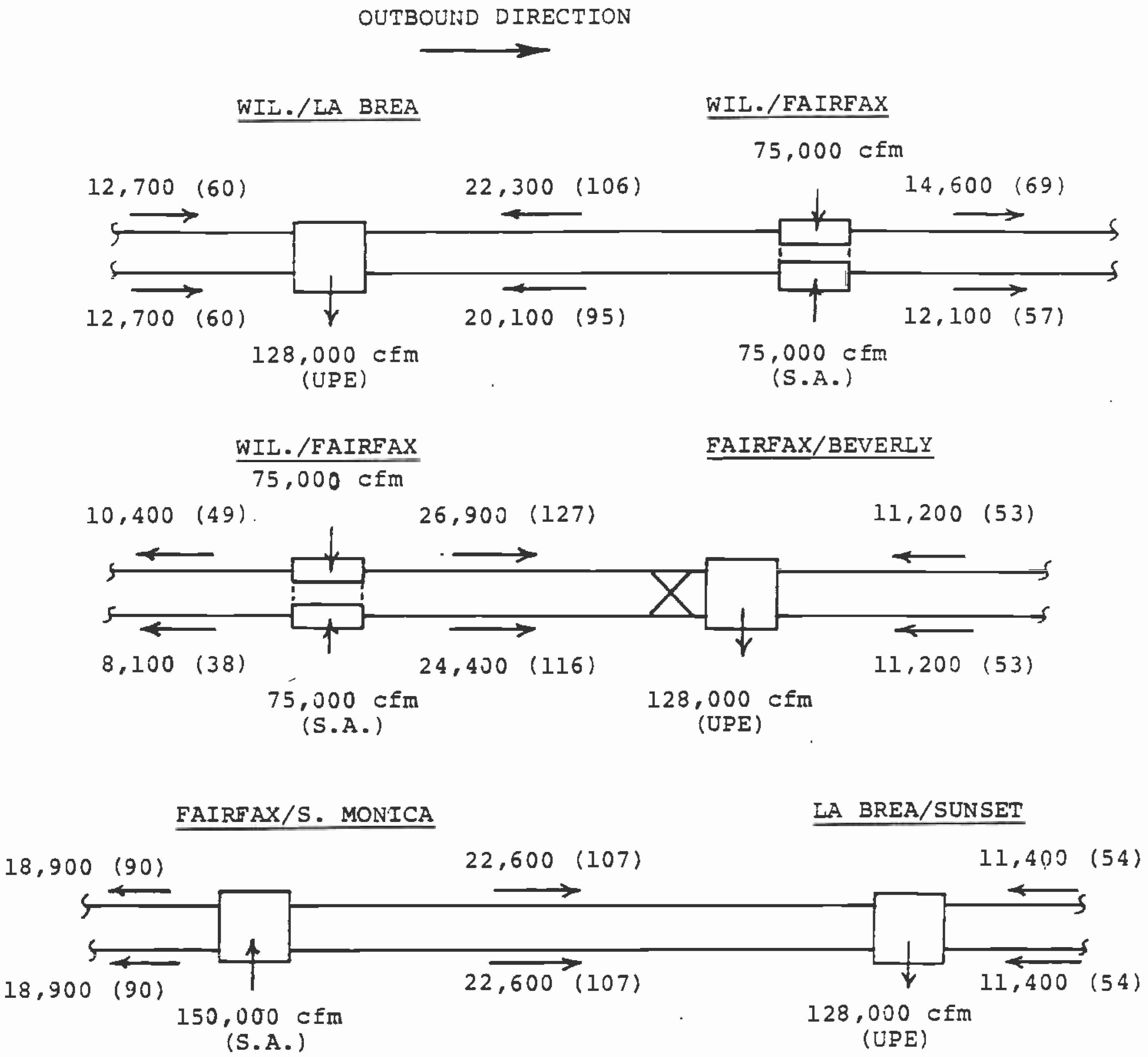

<u>Note</u>: 22,600 (107) means a tunnel air flow rate of 22,600 cfm at an air velocity of 107 feet per minute.

Figure 3.12 Results of SES Simulations using Station Ventilation Systems for Tunnel Purging Outside MOS-1

TABLE 3.12

MAXIMUM METHANE INFILTRATION RATES

HANDLED BY THE PREDICTED VENTILATION RATES

Tunnel Section	Tunnel Length (ft)	Predicted Air Flow Rate (cfm)	Allowable Methane Infiltration Rate (cfm)*
Wil./La Brea to Wil./Fairfax (Outbound)	4,550	20,100	50
Wil./La Brea to Wil./Fairfax (Inbound)	4,550	22,300	56
Wil./Fairfax to Fairfax/Beverly (Outbound)	3,870	24,400	61
Wil./Fairfax to Fairfax/Beverly (Inbound)	3,870	26,900	67
Fairfax/S. Monica to La Brea/Sunset (Outbound)	6,650	22,600	57
Fairfax/S. Monica to La Brea/Sunset (Inbound)	6,650	22,600	57

*Computed based on a maximum methane concentration of 0.25% by volume.

3.4 Pressure Transients

Pressure changes, or transients, occur when a slug of air in front of or in the wake of a moving train is given an abrupt acceleration.

Large, rapid air pressure changes can cause considerable discomfort to subway patrons on-board a train or at a downstream location. They can also affect equipment life (e.g., mid-tunnel fans, cross-passage doors, dampers, station fixtures and signage, etc.) by placing repetitive, reversing loads on the equipment. With regard to human comfort, the Project Criteria (which are based on criteria in the Subway Environmental Design Handbook) state that "... when the total change in pressure is greater than 0.10 psi (2.8 in. wg)... no person, patron or employee, shall be subjected to a rate of pressure change greater than 0.06 psi per second (1.7 in. wg per second)."

The magnitude of train-generated pressure transients on the Starter Line has been estimated by applying the SES program to the long tunnel sections between North Hollywood and Hollywood Bowl stations. This section of the Starter Line is expected to produce the largest pressure transients because of the long tunnel lengths (i.e., 2.1 to 2.4 miles), the high train speeds (70 mph) and the existence of mid-tunnel shafts.

3.4.1 Estimates vs. Criteria

The following estimates apply to tunnel sections where trains can operate at 70 mph. In tunnel sections where lower train speeds are expected, train-induced pressure transients would be lower because the magnitude of pressure change varies with the square of the train speed and the rate of pressure change varies with the cube of the train speed. For example, if the train speed is reduced from 70 to 50 mph, the magnitude of pressure change is reduced by a factor of 0.51 (i.e., $(50/70)^2$) and the rate of pressure change is reduced by a factor of 0.36(i.e., $(50/70)^3$).

3.4.1.1 On Board a Moving Train - Passengers will experience an abrupt (i.e., at a rate exceeding 1.7 in. wg per second) pressure increase of 3.6 in. wg, based on SES analyses, when the front of the train passes a mid-tunnel shaft at a speed of 70 mph. This pressure change exceeds the criterion of 2.8 in. wg This is followed by a gradual pressure rise with a rate of 0.8 in. wg per second, until the rear of the train reaches the shaft. Finally, an abrupt pressure decrease of 2.2. in. wg occurs as the rear of the train passes the shaft. The problem can be alleviated and criteria satisfied if the train speed is held below 62 mph.

Thus, the criteria could be exceeded at only two locations along the entire 18.6-mile long Starter Line (i.e., between Universal City and North Hollywood, and between Wilshire/Crenshaw and Wilshire/La Brea). This conclusion is based on results of the RTS train-simulator (output provided by MRTC) which predicts that 62 mph is exceeded at only the above locations.

3.4.1.2 In Tunnels - Maximum predicted tunnel air pressure of ±6 to 8 in. wg will occur with each train passage. These pressures will produce cyclical loadings of up to ±42 psf on flush-mounted tunnel fixtures such as cross-passage doors and dampers.

3.4.1.3 At Station Platforms - Rapid pressure changes of about ±2 in. wg can be expected, thus satisfying the comfort criteria of 2.8 in. wg. These pressure changes will produce cyclical loadings of about ±10.4 psf on flush-mounted station appurtenances such as architectural finishes, fixtures, advertising panels, etc.

3.4.2 Effect on Fan Performance

Performance of mid-tunnel fans is also affected by train operation. Normally, under steady-state conditions, a fan operates at the point of intersection of the system resistance and the fan performance curves. However, in a subway tunnel, when a fast-moving train approaches a ventilation shaft, more air flows through the fan, and the operating point shifts down on the performance curve to free delivery or below. Conversely, after the train passes and then moves away from the ventilation shaft, the suction created by the train tends to shift the fan operating point up on the curve, possibly into the stalling range of the fan.

The magnitude and rate of fan inlet pressure fluctuations must be made known to the fan manufacturer(s) at the time of bid. Figure 3.13 illustrates the magnitude of fan inlet pressure fluctuations as a function of time (train location). Figure 3.14 depicts graphically how results of these SES analyses have been used to establish the parameters for pressure transient tests in the fan procurement specifications.

461510

K+E 10 X 10 TO THE CENTIMETER 18 X 25 CM
KEUFFEL & ESSER CO. MADE IN U.S.A.

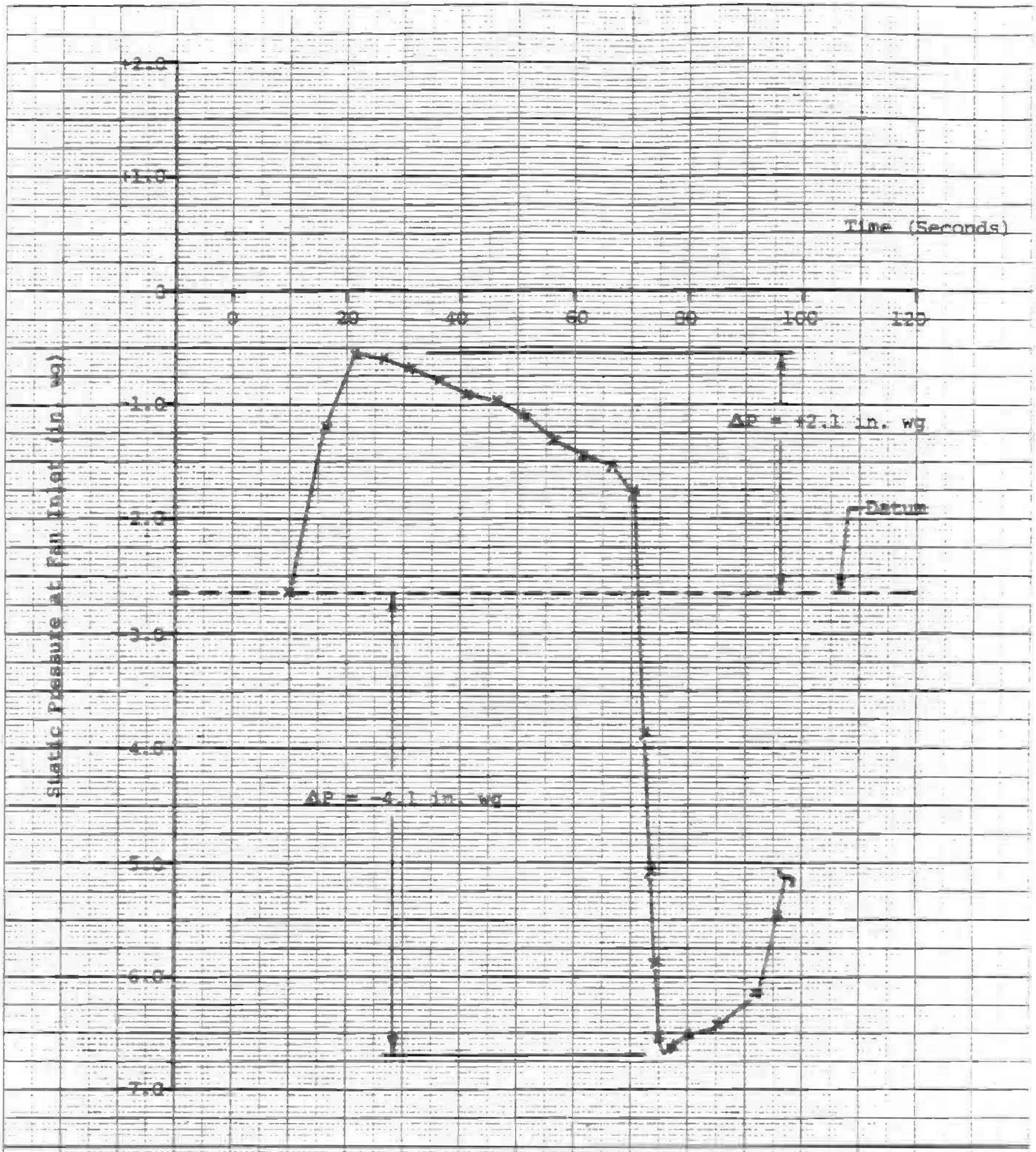

Figure 3.13

Static Pressure vs. Time
at Fan Inlet with Train
Passing Mid-Tunnel Shaft
at 70 mph

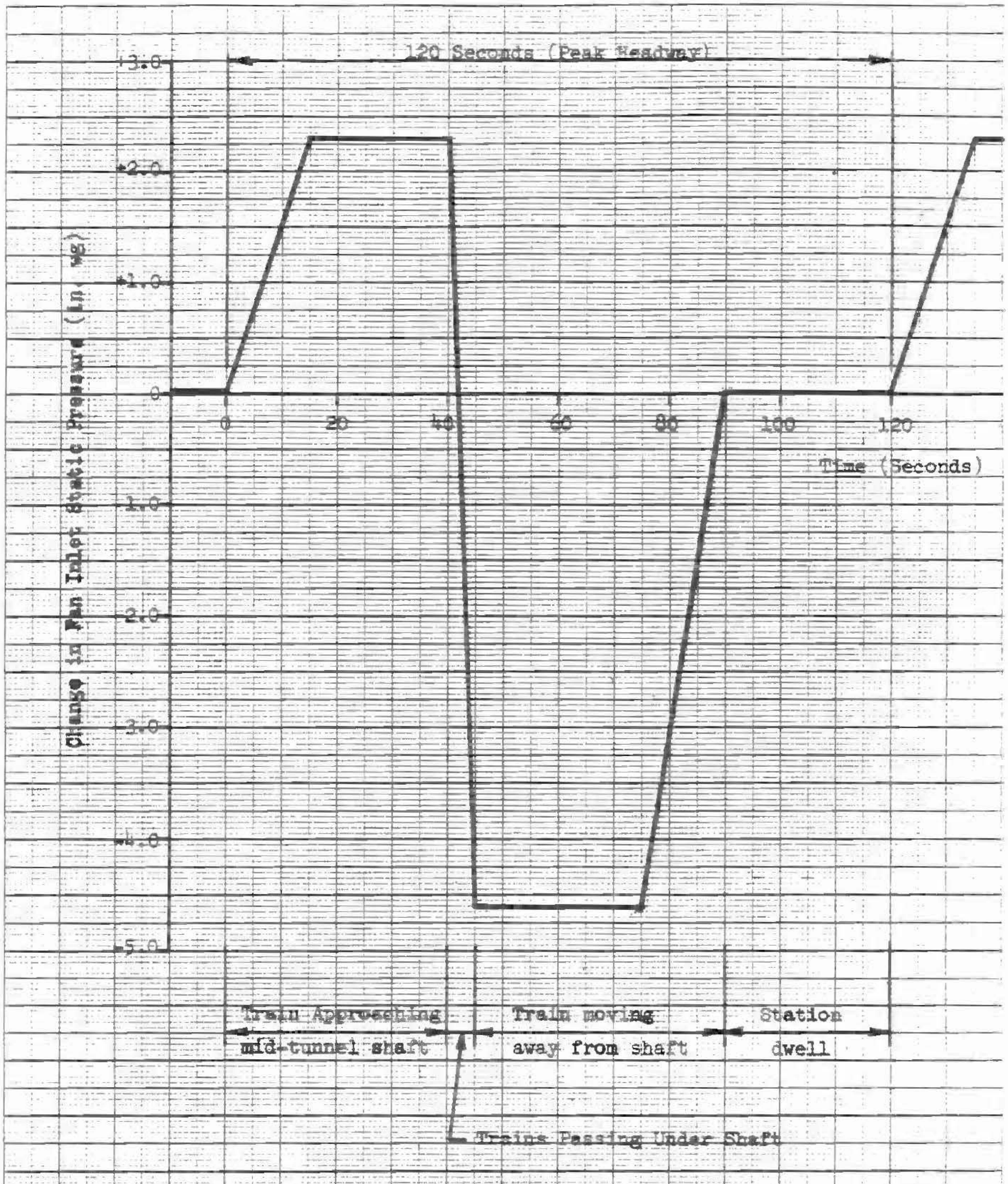

Figure 3.14

Suggested Pressure Transient Test for Mid-Tunnel Fans

461510

K+E 10 X 10 TO THE CENTIMETER KEUFFEL & ESSER CO. MADE IN U.S.A.

3.5 Air Flow Rates for Sizing Shaft Terminals

In sizing gratings or alternative air terminal devices at/or above grade, Section Designers should abide by criteria as reflected in Volume 4, Section 17.

The required grating area is determined by using the appropriate discharge air velocity criteria in conjunction with the air flow rates generated by Emergency, Mid-tunnel, and Underplatform fans and the air flow rates generated by train piston action, which, in the context of the criteria, pertain to "normal" operation.

The fan air flow rates are known and are given on Table 3.7 of this report. The maximum air flow rates generated by train piston action are shown on Table 3.13 for each ventilation shaft.

Each ventilation shaft is designated as being located at either the "inbound" or "outbound" end of a station and as connecting to either the "AR" or "AL" trackway. The "inbound" end of a station is defined as that end of a station closest to Union Station. The "AR" trackway is the trackway leading from Union Station to North Hollywood Station.

Air terminals must be sized based on the largest area requirement. For example, grating size at sidewalk level for an emergency fan with 150,000 cfm capacity would be based on 1,500 fpm emergency operation velocity criteria, which results in 100 sq ft gross area, exclusive of supports. If the same shaft discharges a maximum air flow rate from piston action of 100,000 cfm

TABLE 3.13

SCRTD - METRO RAIL STARTER LINE

PISTON-ACTION-GENERATED AIR FLOW RATES

THROUGH SHAFTS (OUTFLOW)

Station	Shaft Location	Trackway	Maximum Piston Air Flow Rate (cfm)
Union	Inbound	AR & AL	250,000
Union	Outbound	AR & AL	315,000
Civic Center	Inbound*	AR	100,000
Civic Center	Inbound*	AL	96,000
Civic Center	Outbound*	AR	75,000
Civic Center	Outbound*	AL	100,000
5th/Hill	Inbound	AR & AL	100,000
5th/Hill	Outbound	AR & AL	130,000
7th/Flower	Inbound	AR & AL	110,000
7th/Flower	Outbound	AR & AL	160,000
Wil./Alvarado	Inbound	AR	275,000
Wil./Alvarado	Inbound	AL	175,000
Wil./Alvarado	Outbound	AR	125,000
Wil./Alvarado	Outbound	AL	145,000
Wil./Vermont	Inbound*	AR	100,000
Wil./Vermont	Inbound*	AL	96,000
Wil./Vermont	Outbound	AR	85,000
Wil./Vermont	Outbound	AL	95,000
Wil./Normandie	Inbound	AR	85,000
Wil./Normandie	Inbound	AL	85,000
Wil./Normandie	Outbound	AR	90,000
Wil./Normandie	Outbound	AL	115,000
Wil./Western	Inbound	AR	90,000
Wil./Western	Inbound	AL	75,000
Wil./Western	Outbound	AR	75,000
Wil./Western	Outbound	AL	90,000
Wil./Crenshaw	Inbound	AR	190,000
Wil./Crenshaw	Inbound	AL	250,000
Wil./Crenshaw	Outbound*	AR	80,000
Wil./Crenshaw	Outbound*	AL	100,000

TABLE 3.13

SCRTD - METRO RAIL STARTER LINE

PISTON-ACTION-GENERATED AIR FLOW RATES

THROUGH SHAFTS (OUTFLOW)
(Continued)

Station	Shaft Location	Trackway	Maximum Piston Air Flow Rate (cfm)
Mid-Tunnel Shaft	(434+85)	AR	275,000
Mid-Tunnel Shaft	(434+85)	AL	240,000
Wil./La Brea	Inbound*	AR	80,000
Wil./La Brea	Inbound*	AL	75,000
Wil./La Brea	Outbound	AR	100,000
Wil./La Brea	Outbound	AL	100,000
Wil./Fairfax	Inbound	AR & AL	100,000
Wil./Fairfax	Outbound	AR & AL	210,000
Fairfax/Beverly	Inbound*	AR	80,000
Fairfax/Beverly	Inbound*	AL	150,000
Fairfax/Beverly	Outbound	AR	95,000
Fairfax/Beverly	Outbound	AL	95,000
Fairfax/S. Monica	Inbound	AR	110,000
Fairfax/S. Monica	Inbound	AL	100,000
Fairfax/S. Monica	Outbound*	AR	105,000
Fairfax/S. Monica	Outbound*	AL	115,000
La Brea/Sunset	Inbound	AR	85,000
La Brea/Sunset	Inbound	AL	100,000
La Brea/Sunset	Outbound	AR	100,000
La Brea/Sunset	Outbound	AL	80,000
Holly./Cahuenga	Inbound	AR	85,000
Holly./Cahuenga	Inbound	AL	80,000
Holly./Cahuenga	Outbound	AR	250,000
Holly./Cahuenga	Outbound	AL	140,000
Hollywood Bowl	Inbound*	AR	85,000
Hollywood Bowl	Inbound*	AL	90,000
Hollywood Bowl	Outbound*	AR	100,000
Hollywood Bowl	Outbound*	AL	125,000

TABLE 3.13

SCRTD - METRO RAIL STARTER LINE

PISTON-ACTION-GENERATED AIR FLOW RATES

THROUGH SHAFTS (OUTFLOW)
(Continued)

Station	Shaft Location	Trackway	Maximum Piston Air Flow Rate (cfm)
Mid-Tunnel Shaft	(817+50)	AR	275,000
Mid-Tunnel Shaft	(817+50)	AL	180,000
Mid-Tunnel Shaft	(871+00)	AR	250,000
Mid-Tunnel Shaft	(871+00)	AL	270,000
Universal City	Inbound*	AR	80,000
Universal City	Inbound*	AL	90,000
Universal City	Outbound*	AR	100,000
Universal City	Outbound*	AL	90,000
Mid-Tunnel Shaft	(1000+00)	AR	260,000
Mid-Tunnel Shaft	(1000+00)	AL	300,000
North Hollywood	Inbound*	AR	80,000
North Hollywood	Inbound*	AL	220,000
North Hollywood	Tail-Track**	AR & AL	150,000

*The configuration for this shaft has changed from two separate terminals at grade to one combined terminal.

**This shaft now has two separate terminals at grade.

then the sidewalk grating area would have to be 200 sq ft gross area; because for normal operation, a maximum velocity criterion of 500 fpm applies. Therefore, in this example, normal operating criteria would override emergency operating criteria for sizing the gratings.

Mid-tunnel fans and Underplatform fans are to be regarded as systems for "normal" operation and air terminals should be sized accordingly. With respect to Mid-tunnel shafts, it is noteworthy that the maximum air flow rate from piston action (with fans not operating) is greater than the steady-state air flow rate generated with fans operating. For example, the Mid-tunnel shaft connecting to the outbound trackway adjacent to Hollywood Bowl station, processes a maximum piston-action-generated air flow rate of 275,000 cfm compared to a normal steady-state, fan-generated air flow rate of 150,000 cfm. Therefore, in this example, the 275,000 cfm flow rate becomes the basis for sizing the air terminal.

Difficulties may be encountered in at least some locations to find adequate space for sidewalk gratings. Where that is the case, the solution would be to seek off-street terminal locations, or to locate shaft terminals 10 ft or more above the sidewalk, where higher velocities and therefore smaller terminal areas are permissible.

Changes in the shaft/terminal configurations used in the SES analyses have occurred at ventilation shafts adjacent to nine (9) stations. The shafts which have changed are identified in Table 3.13 by an asterisk. To apply the air flows tabulated therein, the following procedure is suggested:

1. Where one combined terminal is now two separate terminals, each should be sized for the maximum air flow given for the combined shaft.

2. Where two separate terminals are now combined, the combined grating should be sized using the sum of the maximum piston air flows shown in Table 3.13 (i.e., AR + AL air flows) or the maximum emergency air flows, selecting the larger of the two areas. The exception is Fairfax/Beverly, where the combined shaft may be sized for the maximum CFM for the AL trackway only, in lieu of the sum of the AR and AL air flows, because of space restrictions.

4.0 CONCLUSIONS AND RECOMMENDATIONS

4.1 Normal Operations

4.1.1 Platform Temperatures

- During Design Year (DY) operations with 4½-minute headways and 150,000 cfm outside air at 84°F distributed over the platform area, average temperatures at the platform of MOS-1 stations can be maintained at 88°F or below. If the supply air system installation is deferred, or the system is not operated, station platform temperatures between 86°F and 90°F are predicted.

- Temperatures in all other stations, outside MOS-1, are based on trains operating on 3½-minute headways. With supply air, they can be kept at or below 89°F when the outdoor temperature is 84°F, except in Hollywood/Cahuenga where the station platform temperature may reach 90°F. Without supply air, the predicted air temperatures would exceed the 89°F criterion in five out of eight stations. In these five stations, the temperatures on the platform may range between 90°F and 92°F.

o INCREASED AVERAGE HEADWAYS RESULT IN REDUCED STATION TEMPERATURES, MAKING IT FEASIBLE TO DEFER SUPPLY AIR SYSTEM INSTALLATION OR OPERATION UNTIL TRAFFIC DENSITY INCREASES

- o RESULTS FROM MOS-1 SIMULATIONS SUGGEST THAT AN INCREASE IN AVERAGE HEADWAY FROM 3½-MINUTES TO 4½-MINUTES WOULD HAVE A SIMILAR, BENEFICIAL EFFECT IN OTHER STATIONS, OUTSIDE MOS-1.

- o IF THE SUPPLY AIR SYSTEM OPERATION IS NOT REQUIRED INITIALLY, THEN ITS INSTALLATION MAY BE DEFERRED.

4.1.2 Cooling Loads

- MOS-1 cooling loads vary between 95 and 175 tons of refrigeration. The average load for the five stations is 146 tons each, based on Long Range Design Standard (LRDS) operations with 3-minute average headway.

- Cooling loads in all other stations, outside MOS-1, range from 175 tons to 425 tons of refrigeration, and the average load is 280 tons, based on 2-minute headways. With 3-minute headways, it can be expected that the 280-ton load in each station will reduce to 187 tons each (2/3x280).

- o WHEN TRAFFIC DENSITY INCREASES TO 3-MINUTE HEADWAY, SUPPLY AIR DISTRIBUTION AND REFRIGERATION MUST BE INSTALLED TO MAINTAIN A REASONABLY ATTRACTIVE STATION ENVIRONMENT.

- A 10% CONTINGENCY SHOULD BE ADDED TO THE REFRIGERATION LOADS SHOWN HEREIN, IN CASE THE OPTIMIZATION OF THE UNDERPLATFORM EXHAUST (UPE) IS NOT ATTAINABLE TO THE EXTENT ASSUMED IN THESE ANALYSES.

- EMBEDDED AND CONCEALED CHILLED WATER AND CONDENSER WATER MAINS SHOULD BE SIZED TO HANDLE THE FUTURE COOLING LOADS, PLUS THE ABOVE-REFERENCED CONTINGENCY.

4.1.3 Air Velocities

- The peak and average air velocities on station platforms in all MOS-1 stations are within the established criteria of 1000 and 600 fpm, respectively, as a result of the lower train speeds and longer headways in the MOS-1 segment.

- Outside MOS-1, peak velocities on station platforms range between 1,100 and 1,500 fpm, thus exceeding the 1,000 fpm criterion. Air velocities of this magnitude could be perceived as a nusiance.

- Average velocities on station platforms, outside MOS-1, meet the 600 fpm criterion with 3½-minute headways except for one case where 620 fpm is predicted, but range between 630 and 930 fpm in 10 of the 13 stations with 2-minute headways.

- Both peak and average velocities are sensitive to blockage ratio. Hence, the values predicted are conservatively high, since they are based on the highest expected blockage ratio (0.527), which may or may not materialize.

- In station entrances, on stairways and escalators, peak velocities in 4 of the 5 MOS-1 stations are within the 500 fpm criterion. At the Wilshire/Alvarado entrances, air velocities briefly exceed the criterion with predicted values of 580 and 650 fpm. the average air velocities satisfy the 350 fpm criterion at all MOS-1 stations.

- Outside MOS-1, peak entranceway air velocities exceed 500 fpm in 10 of the 13 stations, with values ranging from 550 to 1,160 fpm. The average air velocities exceed the 350 fpm criterion in 6 stations with values ranging from 380 to 550 fpm.

o AIR VELOCITIES IN STATIONS OUTSIDE MOS-1 MAY BE EXPECTED TO FALL WITHIN THE RANGE OF ESTABLISHED CRITERIA, IF TRAIN OPERATIONS ARE MODIFIED TO MATCH THOSE FOR THE MOS-1 SEGMENT (i.e., LONGER HEADWAYS AND SLOWER TRAIN SPEEDS) AND/OR IF THE BLOCKAGE RATIO CORRESPONDING TO THE ACTUAL VEHICLE SELECTED IS LESS THAN 0.527.

4.2 Emergency Operations

- With the proposed fan capacities, the revenue sections throughout the Starter Line can be adequately ventilated to provide a smoke-free evacuation path in the event of a major train fire involving up to two fully-involved cars generating about 85.3 million Btu/hr of heat.

- In the single-track, non-revenue tunnels leading to the yards (i.e., east of Union Station), the spread of smoke can be controlled during fires with a heat release rate up to 53.1 million Btu/hr, corresponding to the burning of a single subway car. This is considered acceptable because passenger evacuation will not be a requirement in these short non-revenue tunnels.

- The spread of smoke can be controlled in the double-track, non-revenue tunnels east of Union Station during a fire with a heat release rate of 85.3 million Btu/hr.

- Emergency ventilation requirements can be met withouut the Mullen Avenue shaft (MT-1), even with the impact of the higher air resistance offerred by the segmented steel liner.

- With the loss of one exhaust fan in the shaft nearest an incident, sufficient air flow can be maintained past an incident train to control smoke resulting from a fire with a heat release rate up to 53.1 million Btu/hr (i.e., one fully-involved vehicle) in tunnel sections without a mid-tunnel shaft.

- In tunnel sections with a mid-tunnel shaft, sufficient air flow for smoke control can be achieved during a fire with a heat release rate up to 85.3 million Btu/hr, even with the loss of one exhaust fan.

- In tunnel sections without mid-tunnel shafts, it will be necessary to operate the emergency fans at four (4) stations, two stations on either side of the emergency. In tunnels with mid-tunnel shafts, operating the emergency fans at two stations will suffice.

- By operating the emergency fans at the ends of the stations and the UPE system in exhaust mode, 24 to 30 air changes per hour can be achieved in the stations. This should be adequate to maintain the entranceways clear of smoke in the event of a train fire in a station.

✓ o REVISE THE CRITERIA TO ALLOW FOR A LOWER FIRE HEAT RELEASE RATE (53.1 MILLION BTU/HR) WITH THE LOSS OF ONE EXHAUST FAN. OTHERWISE, PROVISIONS FOR A BACK-UP FAN SHOULD BE MADE AT EACH SHAFT ADJACENT TO A TUNNEL SEGMENT WITHOUT A MID-TUNNEL SHAFT.

o PREPROGRAM FAN AND DAMPER OPERATIONS AS INDICATED ON THE EMERGENCY VENTILATION MATRIX TO ELIMINATE HUMAN ERROR IN THE EVENT OF A FIRE INCIDENT WITHIN THE STARTER LINE.

4.3 Methane Purge

✓ - Utilization of the station ventilation systems for purging tunnels is feasible.

✓ - Air flow rates of about 20,000 cfm per tunnel with a corresponding air velocity of about 100 fpm can be achieved by operating the station exhaust systems.

- Methane infiltration rates of about 50 cfm per tunnel or about 72,000 cu ft/day can be reduced to 0.25% concentration with 20,000 cfm tunnel ventilation rates achieved by operating the station ventilation systems in the proposed manner.

✓ o OPERATION OF THE SUPPLY AIR UNITS IS NOT REQUIRED TO PROVIDE A MEANS FOR VENTILATING TUNNELS DURING NON-REVENUE PERIODS, IF UPE AND MEZZANINE CEILING EXHAUSTS ARE ACTIVATED IN MOS-1 STATIONS.

✓ o SINCE A SEGMENTED STEEL LINER IS BEING USED FOR THE TUNNEL LINE SECTIONS BETWEEN WILSHIRE/CRENSHAW AND FAIFAX/SANTA MONICA STATIONS, ANY INFILTRATION OF GAS THROUGH THE LINER JOINTS WOULD TEND TO ACCUMULATE IN THE POCKETS FORMED BY THE LINER MAKING TUNNEL PURGING MORE DIFFICULT. AS A CONSEQUENCE, FORCED-VENTILATION, OPERATING CONTINUOUSLY, MAY HAVE TO BE CONSIDERED IN THESE TUNNEL SECTIONS.

✓ o THE ABOVE CONDITION CAN BE MITIGATED, AT LEAST IN THE AREA WITH THE HIGHEST MEASURED GAS PRESSURE AND CONCENTRATION (I.E., BETWEEN CRENSHAW AND LABREA) BY PROVIDING SOME MEANS FOR CONTINUOUS TUNNEL PURGING. ✓ ONE APPROACH WOULD BE TO REPLACE ONE OF THE TWO EMERGENCY FANS IN THE SHAFTS ADJACENT TO CRENSHAW AND LABREA WITH A MORE EFFICIENT MID-TUNNEL-TYPE FAN FOR TUNNEL PURGING. ✓ AN ALTERNATIVE APPROACH WOULD BE TO PROVIDE A SCALED-DOWN MID-TUNNEL VENTILATION STRUCTURE HOUSING TWO FANS (ONE PER TRACKWAY) TO BE USED EXCLUSIVELY FOR METHANE PURGING. Which one do you rec.?

o OPERATE THE MID-TUNNEL FANS IN THE TUNNELS SO EQUIPPED, INSTEAD OF USING THE VENTILATION SYSTEMS IN THE ADJACENT STATIONS IF GAS INFILTRATION IS DETECTED BY THE MONITORING SYSTEM AT THESE LOCATIONS.

4.4 Pressure Transients

Does this problem still prevail despite reduction of train speed, as stated earlier?

- On board a train operating at 70 mph, which passes a mid-tunnel shaft or a crosspassage inadvertently left open, an abrupt pressure change (i.e., a pressure change occurring at a rate greater than 1.7 in. wg per second) of 3.6 in. wg can be expected, thus exceeding the criterion of 2.8 in. wg. This condition could occur between Wilshire/Crenshaw and Wilshire/La Brea, and between Universal City and North Hollywood.

- At station platforms, abrupt pressure changes of about ± 2 in. wg can be expected, thus satisfying the passenger comfort criterion of 2.8 in. wg. These pressures can produce a loading of ± 10.4 psf on station finishes, panels, fixtures and appurtenances.

- In tunnels, maximum pressure of about ± 8 in. wg can occur, producing a loading of about ± 42 psf on fixtures, panels, cross-passage doors, dampers and similar devices.

o ESTIMATES OF THE AIR PRESSURE CHANGE ON BOARD A TRAIN ARE BASED ON THE HIGHEST EXPECTED BLOCKAGE RATIO, WHICH MAY OR MAY NOT MATERIALIZE. IF AIR PRESSURES ARE FOUND UNACCEPTABLE TO SUBWAY PATRONS WHEN THE SYSTEM IS IN OPERATION, THEN THE PROBLEM CAN BE ALLEVIATED THROUGH A REDUCTION IN MAXIMUM TRAIN SPEED FROM 70 MPH TO 62 MPH WHEN TRAINS ARE IN THE VICINITY OF A MID-TUNNEL SHAFT.

o STATION FINISHES, FIXTURES, SIGNS, PANELS AND THEIR MOUNTING AND SUPPORTS SHALL BE DESIGNED TO WITHSTAND PRESSURE WAVES RANGING FROM +20 PSF TO -20 PSF REPETITIVELY, WITH EACH ARRIVING/DEPARTING TRAIN.

o BASED ON A SAFETY FACTOR OF 2.0, TUNNEL FIXTURES AND MOUNTING DEVICES, CROSS-PASSAGE DOORS AND DAMPERS SHOULD ACTUALLY BE DESIGNED TO WITHSTAND PRESSURE WAVES RANGING FROM +80 PSF TO -80 PSF REPETITIVELY, WITH EACH PASSING TRAIN. HOWEVER, CURRENT DESIGN CRITERIA OF ±70 PSF SHOULD ALSO BE SATISFACTORY, CONSIDERING THE GENEROUS SAFETY FACTOR.

- o ONE MID-TUNNEL FAN OF EACH SIZE AND CAPACITY SHALL BE SUBJECTED TO A PRESSURE TRANSIENT TEST AS PART OF THE FAN PROCUREMENT PROGRAM. TEST PARAMETERS, SIMILAR TO THOSE SHOWN ON FIGURE 3.14, SHALL BE INCLUDED IN THE FAN PROCUREMENT SPECIFICATIONS.

4.5 Mid-Tunnel Shaft by Hollywood/Cahuenga (Hollywood Bowl Deferred)

- Providing two (2) rather than one (1) mid-tunnel shaft in the 3.1 mile long tunnels between Hollywood/Cahuenga and Universal City can reduce station cooling requirements by 25 and 275 tons of refrigeration, respectively.

- During tunnel emergencies, adequate tunnel air flows for smoke control can be achieved with either two (2) or one (1) mid-tunnel shaft.

- Two (2) mid-tunnel shafts will reduce the lengths of "ventilation zones". This, in turn, reduces the probability of a second train being caught in a disabled-train-segment during an emergency, which otherwise would substantially reduce the effectiveness of the ventilation in that zone. Also, tunnel purge time will be reduced.

- o RETAIN THE MID-TUNNEL VENTILATION SHAFT NEAREST HOLLYWOOD/CAHUENGA STATION TO PROVIDE A MARGIN OF SAFETY DURING EMERGENCY CONDITIONS BY

REDUCING THE LENGTH OF A VENTILATION ZONE, AS WELL AS TO REDUCE STATION COOLING REQUIREMENTS.

- AS AN ALTERNATIVE TO THE ABOVE RECOMMENDATION, AND IN THE INTEREST FURTHER CONSTRUCTION COST REDUCTIONS, A SYSTEM WITH ONLY ONE SHAFT COULD BE USED IF THE REQUIRED ADDITIONAL OPERATING CONSTRAINTS AND RISKS ARE ACCEPTABLE TO THE SCRTD.

REFERENCES

1. "Environmental Control System, Preliminary Design Report", WBS 16AAQ, dated March 4, 1983 (Revised May 6, 1983), prepared by Parsons Brinckerhoff Quade & Douglas, Inc., for DMJM/PBQD, Ways and Structures Consultant.

2. Outline Specifications - Ventilation and Air Cooling Systems, prepared by Parsons Brinckerhoff Quade & Douglas, Inc., for DMJM/PBQD, Ways and Structures Consultant. (Revised May 5, 1983.)

3. Environmental Control Systems Design Criteria, Vol. IV, Section 1, prepared by Parsons Brinckerhoff Quade & Douglas, Inc. (Revised May 12, 1983.)

4. "Emergency Ventilation", prepared by Parsons Brinckerhoff Quade & Douglas, Inc., for DMJM/PBQD, Ways and Structures Consultant, dated February 18, 1983.

5. "Effect of Train Speed (50 vs. 70 MPH) on the Environmental Control System", prepared by Parsons Brinckerhoff Quade & Douglas, Inc., for DMJM/PBQD, Ways and Structures Consultant, dated February 18, 1983.

6. Memo from W.W. Metsch to H.J. Chaliff, dated January 19, 1984, "Position Paper on Station Supply Air".

7. Memo from J.A. Gonzalez to W.W. Metsch, dated January 17, 1984", Results of Emergency Ventilation Studies for Final Design."

8. Memo from J.A. Gonzalez to W.W. Metsch, dated March 1, 1984, "Effect of Eliminating the Station Supply Air System".

9. Memo from J.A. Gonzalez to W.W. Metsch, dated March 6, 1984, "Tunnel Purging Using Station Ventilation Systems".

10. Memo from W.W. Metsch to H.J. Chaliff, dated April 6, 1984, "Air Flow Rates for Sizing Ventilation Shaft Terminals".

11. "Passenger Vehicle Intermediate Specifications", WBS 16CAA12, dated August 1983, prepared by Kaiser Engineers, California.

12. Telephone conversation between K. Sain (MRTC) and W.W. Metsch (PBQD), December 9, 1983.

13. "Report of Subsurface Gas Investigation-Southern California Rapid Transit District-Wilshire Corridor Alignment", prepared for DMJM/PBQD, by Engineering-Science, January 1984.

14. Bakke, P. and Leach, S.J., "Methane Roof Layers", Safety in Mines Research Establishment, Research Report No. 195, November 1960.

15. Associated Engineers, a joint venture of Parsons Brinckerhoff Quade and Douglas, Inc., De Leuw Cather and Company, and Kaiser Engineers, Subway Environmental Design Handbook, Volume I, Principles and Applications, Second Edition, National Technical Information Service, 1976.

16. "Environmental Control System, Final Report", dated June 15, 1984 prepared by Parsons Brinckerhoff Quade & Douglas, Inc., for Metro Rail Transit Consultants.

17. Memo from R.S. Rodda to K.V. Sain, dated November 29, 1984, "Passenger Vehicle Heat Load", File W400A650PV.1.

APPENDIX A

ESTIMATED FIRE HEAT RELEASE RATE

BASIS OF COMPUTATIONS:

The computation method used herein follows the procedure used in the following memoranda:

1. Memo to H.J. Chaliff from W.W. Metsch, April 6, 1983
2. Memo to W.W. Metsch from J.W. Guinan, March 7, 1983

Briefly, the above memoranda assume that a train fire evolves in the following manner.

1. The fire begins under a car and burns at an initial rate, I. The fire continues to burn at the initial rate until the car floor is penetrated and the fire spreads to the car interior leading to "flashover." Flashover is an event when the whole interior of the car erupts in flame. This period - from the onset of the fire to flashover - is estimated to last 20 minutes.

2. At flashover, the fire burns at a higher rate, F1, for the next 60 minutes. During this period, all combustibles above and below the car floor and one-half of the floor material are burned (less what was burned during the initial period).

3. Flashover will be caused in succeeding cars every 20 minutes. However, in the second and succeeding cars, only the combustibles above the floor are assumed to burn. Therefore, the second and succeeding cars will burn at a rate, F2, for a period of 60 minutes.

CAR HEAT LOAD DISTRIBUTION (Per Reference 17)

(1) Total Car Heat Load - 60×10^6 Btu
(ii) Interior Heat Load (above floor) - 33×10^6 Btu
(iii) Heat Load of Car Floor - 17×10^6 Btu
(iv) Exterior heat Load (below Floor) - 10×10^6 Btu

ASSUME, the initial burn rate, I, equals $\underline{2.4 \times 10^6 \text{ Btu/hr}}$.

Therefore, based on the assumed fire scenario, F1 and F2 are computed as follows:

$$F1 = \frac{\text{Interior Load} + \text{Exterior Load} + \tfrac{1}{2} \times \text{Floor Load} - I \times \frac{20 \text{ Min.}}{60 \text{ min./hr}}}{1 \text{ hour}}$$

$$F1 = \frac{33 \times 10^6 \text{ Btu} + 10 \times 10^6 \text{ Btu} + \tfrac{1}{2}\, 17 \times 10^6 \text{ Btu} - 800{,}00 \text{ Btu}}{1 \text{ hour}}$$

$$F1 = \underline{50.7 \times 10^6} \text{ Btu/hr.}$$

$$F2 = \frac{\text{Interior Load} - I^* \times \frac{20 \text{ Min.}}{60 \text{ Min./hr}}}{1 \text{ hour}}.$$

$$F2 = \underline{32.2 \times 10^6} \text{ Btu/hr.}$$

*Note: In this instance, I, is taken as the initial burn rate for the second and succeeding cars and for convenience is also assumed to be 2.4×10^6 Btu/hr.

Therefore, the total heat generated as a function of time is as follows:

				ELAPSED TIME (MINUTES)			
Car No.	0		20		40		60
1		2.4×10^6		50.7×10^6		50.7×10^6	
2				2.4×10^6		32.2×10^6	
3						2.4×10^6	
Total (Btu/hr)		2.4×10^6		53.1×10^6		85.3×10^6	

Therefore, the peak heat release rate during the first 60 minutes is estimated to be 85.3×10^6 Btu/hr, during which two cars are fully involved (i.e., flashover has occurred).

APPENDIX B

INPUT PARAMETERS

The SES analyses used the following principal input parameters:

B.1 Train physical characteristics:

Train consist:	6 cars per train
Train length:	450 feet
Train frontal area:	111.3 square feet max. b.r.
Vehicle tare weight:	40 tons
Regeneration effectiveness:	9% average
Maximum speed:	70 mph
Braking resistor grids:	naturally-convected

B.2 Vehicle heat rejection from auxiliaries (sensible):

Air conditioning:	226,800 Btu/hr-car
Inverter:	61,200 Btu/hr-car
Air compressor:	9,000 Btu/hr-car

B.3 Dwell time in stations:

o Terminal stations:	180 seconds
o Remaining stations:	varies, 25-35 seconds

B.4 Underplatform exhaust heat capture effectiveness

Percentage of sensible propulsion and braking heat captured: 65%

(It was assumed that both propulsion system heat and vehicle air conditioning heat is discharged beneath the floor and subject to capture by the UPE system.)

B.5 Single-Track Tunnel Free Area: 211 square feet

B.6 Steady-State Heat Loads:

A. Tunnels - Lighting and Third Rail:

3½-minute headway	27.4 Btu/hr-ft (60 mph max)
	55.4 Btu/hr-ft (70 mph max)
2-minute headway	45.4 Btu/hr-ft (60 mph max)
	94.4 Btu/hr-ft (70 mph max)

B. Stations:

Lighting	80 KW per station
Escalators	20 Hp per escalator
Misc. Equipment:	
- Fare Gates	600 W (max) per gate
- Ticket Vendors	1200 W (max) per unit
- Add Fare	600 W (max) per unit

- Money Changer 600 W (max) per unit
- Booth Control Panels 600 W (max) per unit

People:

- Sensible 140 Btu/hr-person
- Latent 300 Btu/hr-person

B.7 Weather Data:

Ambient barometric pressure: 29.9 in. Hg

Summer evening design temperatures: 84°F db, 68.5°F wb

Summer daily temperature range: 20°F

Yearly range of average monthly temperature: 24°F

B.8 Heat Sink Properties:

Tunnel Wall

Thermal conductivity: 0.700 Btu/ft-hr-°F

Thermal diffusivity: 0.025 ft^2/hr

Surrounding Soil

Thermal conductivity: 0.93 Btu/ft-hr-°F

Thermal diffusivity: 0.042 ft^2/hr

Deep Sink Temperature: 62.0 °F